BOARD OF ALDERMEN
MONDAY, OCTOBER 19, 2026
REGULAR MEETING @ 6:00 PM.
ALDERMANIC CHAMBERS ~ 2ND FLOOR ~ CITY HALL
235 GRAND STREET, WATERBURY, CT 06702

:AGENDA:

The Regular Meeting will be broadcast live on the City of Waterbury's Government Access Channel (Comcast Channel 96; Frontier Channel 6096) and the City of Waterbury's YouTube Channel. https://youtu.be/-sUDfJNp0jU

PUBLIC HEARING: @ 6:00 P.M.

For the purpose of receiving public input regarding the proposed Automated Traffic Enforcement Safety Device **(ATESD)** Plan and Board of Aldermen approval, as submitted by ***Nadine Amatruda, Deputy Chief of Police.***

►CALL TO ORDER:

►PLEDGE OF ALLEGIANCE:

►PRAYER:

►ROLL CALL:

►OFFICIALLY SCHEDULED PRESENTATION:

MR. JAMES SMITH, Chair, Harold Webster Smith Foundation *— Presentation regarding the Waterbury Land Bank Authority and the proposed* ***$5,000,000 appropriation and bond authorization*** *to fund a matching grant.*

►PUBLIC SPEAKING:

►EXECUTIVE SESSION:

►APPROVAL OF MINUTES:

►MAYOR'S REPORT:

RECESS INTO COMMITTEES:

►NEW BUSINESS:

1. **BRENNY A. ALCANTARA**
   Former Commissioner

   RE: Submittal of a Letter of Resignation from the **Litter Control & Beautification** effective October 02, 2026.

RECEIVE AND PLACE ON FILE.

2. **SAMMY KHOUADRA**
   Construction Manager
   Bureau of Water

   RE: Requesting approval of ON-CALL INSERTION VALVE CONTRACTOR RFP No. 8897 for the Bureau of Water between the City of Waterbury and ZC UTILITY SERVICES LLC d/b/a CARNER BROS.

REFERRED TO THE INTERGOVERNMENTAL COMMITTEE.

3. **ZACH KEITH**
Economic Development and Grants Manager

RE: Requesting approval of a Project **Authorization Letter** for the Curtin Park Renovation Project, which involves design and construction of the park renovation. The estimated Project cost is **$1,099,855.68**.

REFERRED TO THE FINANCE COMMITTEE.

4. **MARK LOMBARDO**
Deputy Director of Public Works

RE: Requesting approval of an On-Call Tree Service Agreement between the City of Waterbury and Hillview Property Maintenance.

REFERRED TO THE INTERGOVERNMENTAL COMMITTEE.

5. **MARK LOMBARDO**
Deputy Director of Public Works

RE: Requesting approval of an On-Call Tree Service Agreement between the City of Waterbury and Cipully Tree Services, LLC.

REFERRED TO THE INTERGOVERNMENTAL COMMITTEE.

6. **MARK LOMBARDO**
Deputy Director of Public Works

RE: Requesting approval of an On-Call Tree Service Agreement between the City of Waterbury and J&J Brothers, LLC.

REFERRED TO THE INTERGOVERNMENTAL COMMITTEE.

7. **MARK LOMBARDO**
Deputy Director of Public Works

RE: Requesting approval of an On-Call Tree Service Agreement between the City of Waterbury and Paulo Landscaping & Tree Removal, LLC.

REFERRED TO THE INTERGOVERNMENTAL COMMITTEE.

8. **CARRIE A. SWAIN,** *Clerk*
Waterbury Board of Education

RE: Requesting approval of a Professional Services Agreement with SGNL Communications, LLC, in an amount not to exceed **$346,304.25**, for a Bi- Directional Amplifier Radio System at the Laurel Hill Complex.

REFERRED TO THE FINANCE COMMITTEE.

9. CARRIE A. SWAIN, *Clerk*
Waterbury Board of Education

RE: Requesting approval of a Professional Services Agreement with Waterbury Bridge to Success Partnership, Inc., in an amount not to exceed **$185,310.00**, for Onsite Before and After School Support to implement its BOOST Community School Initiative.

REFERRED TO THE FINANCE COMMITTEE.

10. CARRIE A. SWAIN, *Clerk*
Waterbury Board of Education

RE: Requesting approval of a Facilities Use Agreement, at no cost, with the University of Connecticut for the use of space, facilities, and equipment for the Waterbury Robotics Institute.

REFERRED TO THE INTERGOVERNMENTAL COMMITTEE.

11. MICHAEL LEBLANC
Director of Finance

RE: Requesting that a Public Hearing be set for Monday, November 16, 2026, regarding a proposed **$3,000,000 Bond Authorization** to finance capital costs related to road and parking lot improvements as part of the City's **2027 Milling & Repaving Program**, in accordance with the provisions of City Charter, Chapter 10, Section 10-A-2(b).

REFERRED TO THE FINANCE COMMITTEE.

12. MICHAEL LEBLANC
Director of Finance

RE: Requesting that a Public Hearing be set for Monday, November 16, 2026, regarding a proposed **$5,400,000 Bond Authorization** to finance the replacement and upgrade of portable and mobile radios for the Police Department, Fire Department, and Department of Public Works, in accordance with the provisions of City Charter, Chapter 10, Section 10-A-2(b).

REFERRED TO THE FINANCE COMMITTEE.

13. MICHAEL LEBLANC
Director of Finance & WPC Primary Rep.

DENIS CUEVAS
Business Manager, JACOBS

RE: Requesting approval of a Construction Contract for the Trumpet Brook Sewer Relocation between the City of Waterbury and Coastline Construction Corp., in the amount of **$2,500,000**, which includes an Owner Controlled Contingency of **$113,000**.

REFERRED TO THE FINANCE COMMITTEE.

14. ZACH KEITH
Economic Development and Grants Manager

RE: Requesting approval of a State of Connecticut Department of Energy and Environmental Protection (CT DEEP) Urban Green & Community Garden Grant Application for Curtin Park Renovation Project. The estimated cost of the Project is **$1,099,855.68**. This CT DEEP Grant generally requires a **50% match.**

REFERRED TO THE FINANCE COMMITTEE.

15. MICHAEL LEBLANC
Director of Finance

RE: Requesting approval of a License Agreement with Kaybar Development II, LLC, allowing the City the exclusive use of approximately twenty-seven (27) parking spaces located at 320 East Main Street for use by the Police Department for employee and overflow visitor parking, for a term of one year with the possibility of continuing on a month-to-month basis, at an annual license fee of **$1.00**.

REFERRED TO THE FINANCE COMMITTEE.

16. ALDERWOMAN ZIMMERMANN
District 3
ALDERMAN GROSSO
District 1
ALDERMAN MCENTEE
District 1
ALDERMAN SANCHEZ
District 5
ALDERMAN FELICIANO-ROMAN
District 5
ALDERWOMAN MARTINEZ-MCCARTHY
District 5

RE: Requesting approval of a Legislative Inquiry to modernize Waterbury's winter road treatment program by evaluating a transition from the current sand/salt mixture to a primarily salt-based De-icing program, to be referred to the Director of Public Works and all appropriate departments for review and response.

REFERRED TO THE INTERGOVERNMENTAL COMMITTEE.

►STANDING COMMITTEE:

CASSIE M. GORMAN
Tax Collector

RE: Request for refunds for Tax Overpayments in the amount of **$6,278.01.**

REFERRED TO THE FINANCE COMMITTEE.

►<u>UNFINISHED BUSINESS:</u>

1. MICHAEL LEBLANC
Director of Finance

RE: Requesting approval of a Purchase and Sale Agreement for the sale of 36 Welton Street, a vacant 0.43-acre parcel, for consideration of **$<u>25,000</u>** and an associated tax assessment with Laing Capital Partners, LLC.
(Received on January 05, 2026 and referred to Finance Committee). PH set for January 20, 2026 (Tabled until 02/09/2026.)

2. RAFAEL FELICIANO-ROMAN
Board of Aldermen
5th District

RE: Requesting approval for cultural district establishment, bond reporting, and Rolling Mill Playground plan, including:

<u>Puerto Rican Heritage Cultural District</u>
(Received on December 15, 2025 and referred to Intergovernmental Committee postponed until December 14, 2026.)

3. RAFAEL FELICIANO-ROMAN
Board of Aldermen
5th District

RE: Requesting approval for updates to City Boards and Commissions structure and transparency, including:

. <u>Arts, Culture and Tourism Commission</u>
(Received on December 15, 2025 and referred to Intergovernmental Committee and referred to Corporation Counsel.)

4. RAFAEL FELICIANO-ROMAN
Board of Aldermen
5th District

RE: Requesting approval for updates to City Boards and Commissions structure and transparency, including:

<u>Transparency of Boards and Commissions</u>
(Received on December 15, 2025 and referred to Corporation Counsel and postponed until March 9, 2026, Public was set September 8, 2026 for October 05, 2026 at 6 pm.)

5. RAFAEL FELICIANO-ROMAN
Board of Aldermen
5th District

RE: Requesting approval to establish a Gentrification Mitigation Zone Ordinance and create Youth Alderman positions, including:

<u>Gentrification Mitigation Zone Ordinance</u>
(Received on December 15, 2025. - Referred to Intergovernmental Committee. Referred to Corporation Counsel and to amend the timetable to postpone consideration until - December 14, 2026.)

6. RAFAEL FELICIANO-ROMAN

RE: Requesting approval to establish a

Board of Aldermen
5th District

Gentrification Mitigation Zone Ordinance and create Youth Alderman positions, including:

Youth Alderman Positions

(Received on December 15, 2025. - Referred to Intergovernmental Committee). Referred to Corporation Counsel.)

7. RAFAEL FELICIANO-ROMAN
Alderman – 5th District

RE: Requesting a Hobart Welton Carriage Shed Historic Recognition Resolution.

(Received on January 05, 2026 and referred to Intergovernmental Committee and Referred to Corporation Counsel.)

8. IAN T. BLAKE
Alderman 2nd District

BELINDA WEAVER
Alderwoman 2nd District
(Co-Sponsor)

RE: Submittal of an Ordinance Proposal to include and implement an itemized distribution statement on taxpayers' bills. Taxpayers would benefit from clear, consistent, plain-language information showing how the property tax levy is allocated across major City services.

(Received on February 9, 2026 and referred to the Finance Committee.)

9. MICHAEL RINALDI
Alderman, 1st District

KENNY CURRAN
Alderman, 1st District'
Lead Sponsors

MICHAEL DIGIOVANCARLO
SEAN MOSLEY
BELINDA WEAVER
IAN BLAKE
JOHN DREWRY
MICHAEL GROSSO
SANDRA MARTINEZ-MCCARTHY
KELLY ZIMMERMANN
BRYAN MCENTEE
GEORGE NOUJAIM
JEFF HUNTER
RAFAEL FELICIANO-ROMAN
ADRIAN SANCHEZ
Alderman/Alderwoman/Co-Sponsors

RE: Submittal of Codification of Fire Hydrant Rules and Regulations Resolution.

(Received on May 11, 2026 and referred to Intergovernmental Committee. Referred to Corporation Counsel.)

10. RAFAEL FELICIANO-ROMAN
SANDRA MARTINEZ-MCCARTHY
ADRIAN SANCHEZ
KELLY ZIMMERMANN

RE: Requesting a legislative inquiry concerning financial reporting and documentation for certain Capital Projects and Special Program accounts.

(Received on May 11, 2026 and referred to the Intergovernmental Committee and was Tabled until October 05, 2026.)

11. MICHAEL LEBLANC
Director of Finance

RAMON ESPONDA
Superintendent of Water

RE: Requesting approval of 2026 **$25,000,000** Capital Appropriation & Bond Authorization for Water Enterprise System Renewal & Replacement Capital Projects.
(Received on September 08, 2026 and referred to Finance Committee.)

12. MICHAEL LEBLANC
Director of Finance

RE: Requesting approval of a **$5,000,000** Appropriation and Bond Authorization for a Matching Grant to the Waterbury Land Bank Authority, Inc.
(Received on August 17, 2026 and referred to the Finance Committee, PH held on September 8, 2026.)

13. MICHAEL LEBLANC
Director of Finance

RE: Requesting approval of an Agreement to Convey City owned surplus properties to the Waterbury Land Bank Authority pursuant to the Memorandum of Understanding between the City and Land Bank. The properties to be conveyed are nineteen (19) vacant lots. The property listing is as follows:

- 41 William Street (MBL: 0296-0090-0050)
- 282 Grove Street (MBL: 0253-0064-0142)
- 10 Ward Street (MBL: 0237-0183-0094)
- 322 Orange Street (MBL: 0237-0181-00 46)
- 190 Walnut Street (MBL: 0276-0601-0 149)
- 264 Orange Street (MBL: 0237-0183-0097)
- 270 Orange Street (MB L: 0237-0183-0096)
- 255 Lincoln Street (MBL: 0 l78-0536-0045)
- 1 Willow Court (MBL: 0215-0691-0I 19)
- 572 Baldwin Street (MB L: 0369 -029 8-0491)
- 49 William Street (MBL: 0276-0090-0202)
- 25 Poplar Place (MBL: 0390-0686-0009)
- 115 Bishop Street (MBL: 0236-0173-0046)
- Bishop Street, Lot 461 (MBL: 0236-0173-0461)
- Catherine Avenue, Lot 179 (MBL: 0276-0599-0179)
- 38 Crown Street (MBL: 0217-0717-0124)
- 36 Crown Street (MBL: 0217-0717-0123)
- Pearl Lake Road, Lot 16 (MBL: 0485-0498-0016)
- 28 Bronson Street (MBL: 0236-0173- 00 40)

(Received on September 08, 2026 and referred to the Intergovernmental Committee, and Tabled until September 21, 2026.)

14. RAFAEL FELICIANO-ROMAN
Alderman – 5th District

RE: Recommendation of filers (s): The filers of this motion recommend that the proposed legislative inquiry be approved and sent to the Law Department for a written opinion/clarification on the following Ordinance:

§ 39.050 Municipal Employment of Elected Officials.

(Received on September 08, 2026, and referred to the Intergovernmental Committee and Corporation Counsel.)

15. RAFAEL FELICIANO-ROMAN
Alderman – 5th District

MICHAEL DIGIOVANCARLO
Boa President

RE: Recommendation of filers (s): Send to the Law Department for review Official Filing: That the following Sections of the City Code of Ordinances be amended: written opinion/clarification on the following Ordinance: **§ 38.072 EXECUTION OF CONTRACTS.**
(Received on September 08, 2026, and referred to the Intergovernmental Committee and Corporation Counsel.)

16. RAFAEL FELICANO-ROMAN
SANDRA MARTINEZ-MCCARTHY
ADRIAN SANCHEZ
KELLY ZIMMERMANN
MICHAEL GROSSO

RE: Requesting that a proposed ordinance prohibiting the use of glyphosate-based herbicides on City-owned property, including enforcement, exceptions, and implementation provisions, be referred to the Law Department for review and draft language. ***(Received on May 11, 2026 and referred to the Intergovernmental Committee.)***

17. RAFAEL FELICANO-ROMAN
SANDRA MARTINEZ-MCCARTHY
ADRIAN SANCHEZ
KELLY ZIMMERMANN
MICHAEL GROSSO
BRYAN MCENTEE
GEORGE NOUJAIM

RE: Requesting approval of a Proposed Ordinance establishing a formal Centennial Celebrations Commission to coordinate the City's participation in the 250th Anniversary (Semiquincentennial) celebration, and any future major local, state, or national Centennial Celebrations, with structured Memberships, reporting requirements, and Public transparency provisions. Referred for Corporation Counsel review and draft refinement. ***(Received on February 25, 2026 and referred to the Intergovernmental Committee.)***

18. KENNETH J. CURRAN
Board of Aldermen
District 1

JOHN DREWRY
Board of Aldermen
District 3
Co-Sponsor

RE: Submittal of a Loneliness and Social Isolation Commission Resolution.
(Received on March 9, 2026 and referred to Intergovernmental Committee.)

19. TARA L. SHAW
Director of Human Resources

RE: Management Pay Plan- Proposed Modifications to Salary Ranges.
(Received on September 21, 2026, and referred to the Intergovernmental Committee. Tabled on September 21, 2026.)

20. ROBERT DOWD

RE: Requesting approval of a Construction

TOM FAVAZZO
Project Managers, WDC

Contract RFP# 8753 for Chase Building Renovations between the City of Waterbury and KBE Building Corporation. ***(Received on October 05, 2026, and referred to the Intergovernmental Committee. Failed to the meet the 11-vote threshold; carries over to the next meeting October 19, 2026.)***

21. ROBERT DOWD
TOM FAVAZZO
Project Managers, WDC

RE: Requesting approval of a Construction Contract for the RFP #8801 Waterbury Community Health Resource Center Renovation with J.A. Rosa. ***(Received on October 05, 2026, and referred to the Intergovernmental Committee. Failed to meet the11-vote threshold; therefore, the matter carries over to the next meeting October 19, 2026.)***

22. NADINE AMATRUDA
Deputy Chief of Police

RE: Request to set a Public Hearing for Automated Traffic Enforcement Safety Device Plan (ATESD) and Board of Aldermen approval. ***(Received on October 05, 2026, and referred to the Intergovernmental Committee. Failed to meet the 11-vote threshold; therefore, the matter carries over to the next meeting October 19, 2026.)***

23. KENNETH CURRAN
Alderman - District 1

JOHN DREWRY
Alderman - District 3

RE: Request for a Public Hearing and Approval of Ordinance Creating a Loneliness and Social Commission. ***(Received on October 05, 2026, and referred to the Intergovernmental Committee. Public hearing set for November 16, 2026.)***

MJD/ec
BOA-Agenda 10-19-2026

adegirolamo@waterburyct.org
T: 203.574.6712 x7074 | F: 203.574.6804

WATERBURY

From: Brenny Alcantara <brenny.alcantara.lb@gmail.com>
Sent: Friday, October 2, 2026 12:52 PM
To: Alexandra DeGirolamo <adegirolamo@waterburyct.org>
Subject: Regarding Resignation

Hello Alexandra,

I'm not sure if you have heard, but I plan on resigning from the Litter Control and Beautification Commission. I was wondering if you can guide me throughout the process for it?

Best,
Brenny
--
Brenny A. Alcantara P. *(he/him)*
Litter Control & Beautification Commission | President
Waterbury City Hall, Connecticut
203-802-1932

Ebony Cooper

From: Alexandra DeGirolamo
Sent: Friday, October 2, 2026 12:58 PM
To: Angela Battle; Deborah Duarte; Ebony Cooper; Michael Dalton; Joe Geary
Subject: FW: Regarding Resignation

FYI

Ali DeGirolamo, MPA
Mayoral Aide
The Office of Mayor Paul K. Pernerewski, Jr.
City of Waterbury

235 Grand Street
Waterbury, CT 06702
adegirolamo@waterburyct.org
T: 203.574.6712 x7074 | F: 203.574.6804

WATERBURY

From: Alexandra DeGirolamo
Sent: Friday, October 2, 2026 12:58 PM
To: 'Brenny Alcantara' <brenny.alcantara.lb@gmail.com>
Subject: RE: Regarding Resignation

Hi Brenny,

I did not hear. Thank you for your time serving on the Litter Control and Beautification Commission.

If you would like to resign, we would need an email or letter stating you would like to resign from the Litter Control and Beautification Commission.

You can send it to the following people:
Angela Battle abattle@waterburyct.org
Deborah Duarte dduarte@waterburyct.org
Ebony Cooper ecooper@waterburyct.org
Michael Dalton mdalton@waterburyct.org
Alexandra DeGirolamo (me) adegirolamo@waterburyct.org

Ali DeGirolamo, MPA
Mayoral Aide
The Office of Mayor Paul K. Pernerewski, Jr.
City of Waterbury

235 Grand Street
Waterbury, CT 06702

ITEM #2

City of Waterbury

Bureau of Water

Office: (203)574-8251

WATERBURY CITY CLERK
RECEIVED
2026 OCT -6 A 10:32

Memorandum

To: Board of Aldermen

From: Sammy Khouadra, Construction Manager, Bureau of Water

Date: October 1, 2026

Re: Approval Request/ Executive Summary - ON-CALL INSERTION VALVE CONTRACTOR RFP No. 8897 for the Bureau of Water between the City of Waterbury and ZC Utility Services LLC d/b/a Carner Bros.

The Bureau of Water respectfully requests your approval of the above-referenced agreement for ON-CALL INSERTION VALVE CONTRACTOR between the City of Waterbury and ZC Utility Services LLC d/b/a Carner Bros. ("Carner Bros. On-Call Insertion Valve Contract").

There was only one response to RFP No. 8897, even though this was a rebid of RFP No. 8848, which was no response. After review of the sole response to RFP No. 8897, the Section Committee, which consisted of me, as Construction Manager, Ramon Esponda, Superintendent of Water, Christopher Savage, Assistant Superintendent, and Terry Latifi, Engineer, recommended ZC Utility Services LLC d/b/a Carner Bros. as the successful proposer after multiple bidding rounds, their proposal consistently demonstrated the strong capabilities and overall value required for this RFP.

All services requested under this agreement will be authorized through Task Orders and Purchase Orders following the rates and fees set forth in the ATTACHMENT E (Price Proposal), which has been incorporated into the agreement as part of Attachment A (see attached agreement).

Each Task Order will set out, on a project-by-project basis, the desired scope of work, monetary terms, and time of performance for such work, plus all other pertinent project-specific information.

The term of the agreement will run from the date of execution by the Mayor through June, 30th 2029, with up to two additional one-year options.

Accordingly, attached please find for your review and consideration the required number of copies of the proposed Agreement, the vendor's Price Proposal, Debarment Certificate and Tax clearance. In addition, one record set of the Carner Bros. On-Call Insertion Valve Contract (with all Attachment A documents in Water's possession to date) has been placed on file with the City Clerk.

Lastly, please be advised that the Bureau of Water will have a representative present at your upcoming meeting to answer any questions you may have regarding this matter.

Thank you.

Attachment

cc: Attorney Lynn McHale, via email, w/o attachment.

Ramon Esponda, Water Superintendent, via e-mail, w/o attachment

Sammy Alkhouadra

Verified by pdfFiller
10/06/2026

CONTRACT
for
ON-CALL INSERTION VALVE CONTRACTOR
between
City of Waterbury
and
ZC Utility Services LLC d/b/a Carner Bros.

THIS CONTRACT, effective on the date signed by the Mayor, is by and between the CITY OF WATERBURY, City Hall, 235 Grand Street, Waterbury, Connecticut 06702 (the "City") and ZC Utility Services LLC d/b/a Carner Bros., located at 10 Steel Ct, Roseland, NJ 07068-1236, a State of Connecticut duly registered foreign (NJ) limited liability company (the "Contractor").

WHEREAS, the Contractor submitted a bid to the City in response to **Request for Proposal ("RFP") Number 8897** for **ON-CALL INSERTION VALVE CONTRACTOR**; and

WHEREAS, selected the Contractor to perform services regarding **RFP Number 8897**; and

WHEREAS, the City desires to obtain the Contractor's services for **ON-CALL INSERTION VALVE CONTRACTOR** pursuant to the terms set forth in this Contract (the "Project").

NOW THEREFORE, THE PARTIES AGREE AND COVENANT AS FOLLOWS:

1. Scope of Services. The Contractor shall furnish all of the labor, services, equipment, materials, supplies, transportation, and incidentals necessary to complete the Project as specified in this agreement (also referred to herein as "Contract") and such shall be completed in a satisfactory manner, as reasonably determined by the City. All labor, services, equipment, materials, supplies, transportation, and incidentals shall comply with **(i)** any and all applicable local, state and federal laws, statutes, ordinances, rules and regulations, including without limitation all notice requirements thereunder, and **(ii)** generally accepted professional standards.

1.1. The Project consists of **ON-CALL INSERTION VALVE CONTRACTOR**, as detailed and described in the Proposal Documents in **Attachment A** and are hereby made material provisions of this Contract. **Attachment A** shall consist of the following, which are attached hereto, are acknowledged by the Contractor as having

been received, or otherwise hereby incorporated by reference as noted below, and all are made a part hereof:

1.1.1 **RFP Number 8897** (acknowledged by the Contractor as having been received);

1.1.2 Contractor's Proposal submitted in response to **RFP Number 8897**, consisting of 42 pages, Contractor's 3 page Cost Schedule, dated August 19, 2026 (signed August 20, 2026), and 1 page letter from Contractor dated August 27, 2026 (all attached hereto);

1.1.3 Annual Statement of Financial Interests; Disclosure and Affidavit Re: Outstanding Obligations to the City; Debarment Certification; Corporate Resolution, Non-Collusive Affidavit (incorporated by reference);

1.1.4 Certificates of Insurance (attached hereto);

1.1.5 Performance Bond and Payment Bond (incorporated by reference);

1.1.6 Special Conditions Article 1 – Article 11 consisting of 7 pages (attached hereto)

1.1.7 General Conditions Article 1 – Article 111 consisting of 34 pages (attached hereto);

1.1.8 Any and all amendment(s) and Change Orders issued by the City after execution of Contract (incorporated by reference);

1.1.9 All applicable Federal, State and local statutes, regulations, charter and ordinances (incorporated by reference), and

1.1.10 All permits (including, but not limited to, City of Waterbury Building permit(s)) and licenses (incorporated by reference).

1.2. The entirety of **Attachment A** plus this executed instrument are together deemed the Contract Documents (hereinafter collectively referred to as "Contract Documents"). The City's record copy of the Contract Documents shall control and shall be effective and binding on the Contractor. In the event that any provision in the Contract Documents conflict with any other provision therein, the provision in the component part of the Contract Document first enumerated below shall govern over any other component part which follows it numerically.

1.2.1 Federal laws and regulations
1.2.2 State, and local laws, regulations, charter and ordinances

1.2.3 Contract Amendment(s) and Change Orders
1.2.4 Contract
1.2.5 Contractor's Price Proposal
1.2.6 Special Conditions
1.2.7 General Conditions
1.2.8 **RFP Number 8897 documents** not included above in 1.2.1 – 1.2.7

1.3. Task Order Development. The parties hereto agree that the City, through its Using Agency (i.e., City Department), may request from the Contractor at any time during the term of this Contract a proposal to perform services pertaining to **ON-CALL INSERTION VALVE CONTRACTOR** that shall be completed within the Contract Time of this Contract and as further provided in the applicable Task Order. The Contractor shall prepare for the Using Agency's review, comment and approval a Task Order that:

1.3.1 assigns a Task Order number;
1.3.2 provides a general description of the Task Order project;
1.3.3 provides the time by which all work under the Task Order shall be completed;
1.3.4 proposes a not to exceed cost to perform all work under the Task Order with compensation being based upon the hourly rates provided in the Contractor's response to the City's **RFP Number 8897** and paid on a time and materials basis;
1.3.5 provides a spreadsheet of the Contractor's proposed level of effort for the Task Order work that includes equipment, material, and man-hours budgeted for each subtask within the Task Order;
1.3.6 addresses any comments provided by the Using Agency;

1.4 The parties hereto agree that no work shall commence under a Task Order until and unless it has been fully executed by the Contractor (through its Project Manager) and by the City (through the Department Head of the Using Agency) and a Purchase Order for said work has been issued.

1.5 Task Order Process. The parties hereto agree that for all Task Orders approved in writing by the City's Using Agency:

1.5.1 The Using Agency shall process a requisition with the City's Finance Department for each specific Task Order;
1.5.2 The Using Agency shall not issue a Notice to Proceed with the Task Order work to the Contractor until and unless the City issues a Purchase Order for such work; and
1.5.3 The Contractor shall provide invoices to the Using Agency on a monthly basis for services rendered under each Task Order during the period in question

and shall include therewith a narrative detailing the services rendered during the period in question and any further information requested by the Using Agency.

2. Representations Regarding Qualification and Accreditation. The Contractor represents that its employees are licensed to perform the scope of work set forth in this Contract. The Contractor further represents that its employees have the requisite skill, expertise and knowledge necessary to perform the scope of work required under the terms of this Contract, including any supplementary work and the City relies upon Contractor's representations.

2.1. Representations regarding Personnel. The Contractor represents that it has, or will secure at its own expense, all personnel required to perform the services under this Contract. Such personnel shall not be employees of or have any contractual relationship with the City, unless use of City employees or of personnel having a contractual relationship with the City is approved in writing. As set forth above, all the services required hereunder shall be performed by the Contractor or under its supervision and all personnel engaged in the work shall be fully qualified and shall be authorized or permitted under state or local law to perform such services.

2.2. Representations regarding Qualifications. The Contractor hereby represents that, to the extent required by Federal, State and Local statutes, regulations, codes, ordinances, and policies, that the Contractor and/or its employees be licensed, certified, registered, or otherwise qualified, the Contractor and all employees providing services under this Contract, are in full compliance with those statutes, regulations and ordinances. Upon City request, the Contractor shall provide to the City a copy of the Contractor's licenses, certifications, registrations, etc.

3. Responsibilities of the Contractor. The Contractor agrees to properly implement the services required in the manner herein provided. The Contractor shall, in addition to any other responsibilities set forth in this Contract and the Schedules and Attachments hereto, perform the following coincident with the performance of this Contract:

3.1. Due Diligence Obligation. The Contractor acknowledges its responsibilities to examine and to be thoroughly familiar with the City's solicitation document, including, but not limited to the plans, specifications, drawings and any addenda thereto. The Contractor hereby warrants and represents that prior to the submission of its proposal during the solicitation process it reviewed or was afforded opportunity, by the City, to review all physical items, facilities, services and functions essential to the satisfactory performance of the services required ("Due Diligence") and thereby certifies that all such items facilities, services and functions are included in this Contract and thereby warrants that:

3.1.1 it conducted or had opportunity to conduct all due diligence prior to the submission of its proposal and, accordingly, any additional costs, services or

products resulting from the failure of the Contractor to complete Due Diligence prior to submission of its proposal shall be borne by the Contractor. Furthermore, the Contractor had the opportunity during the solicitation process to ask questions it saw fit and to review the responses from the City;

3.1.2 its failure or omission to make investigation and verification of data shall, in no way, be cause for future claim of ignorance of such data or conditions nor shall such failure to investigate and verify be the basis for any claim whatsoever, monetary or otherwise;

3.1.3 it is solely responsible for resolving any issues resulting from its failure to conduct due diligence and it shall assume any and all resulting costs it incurs during the Project;

3.1.4 it was responsible for specifying any changes and disclosing any associated new costs prior to submittal of its proposal. In the event the Contractor failed to disclose any such new cost prior to the submittal of its proposal, the Contractor hereby covenants that it shall remain solely responsible for, and shall absorb, those non-disclosed costs;

3.1.5 it has familiarized itself with the nature and extent of the Contract Documents, Project, locality, and with all local conditions and Federal, State and local laws, ordinances, rules and regulations that in any manner may affect cost, progress or performance of the Project;

3.1.6 it has given the City written notice of any conflict, error or discrepancy that the Contractor discovered in the City's solicitation documents and other documents for **RFP Number 8897** (collectively "Proposal Documents");

3.1.7. it agrees that the Proposal Documents are sufficient in scope and detail to indicate and convey understanding of all terms and conditions for performance of the Project;

3.1.8. it has studied carefully all reports of investigations and tests of subsurface and latent physical conditions at the site or otherwise affecting cost, progress or performance of the Scope of Services which were utilized in the preparation of the plans and specifications;

3.1.9 it has made or caused to be made examinations, investigations, measurements and tests and studies of any applicable reports and related data as it deems necessary for ensuring performance of the Scope of Services at the Contract Price within the Contract Time and in accordance with the other terms and conditions of the Contracts; and certifies no additional examinations,

investigations, tests, reports or similar data are or will be required by Contractor for such purposes; and

3.1.10 The Contractor shall not take advantage of any obvious error or apparent discrepancy in the Contract. Notice of any error or discrepancy discovered shall be given immediately in writing to the City, who shall make such corrections and interpretations as it may deem necessary for the completion of the Project in a satisfactory and acceptable manner.

3.2. Safety. Contractor shall perform all work in a safe manner in full compliance with local, state and federal health and safety regulations. Contractor shall immediately correct any dangerous condition caused by or resulting from its work. If it fails to correct, or to act diligently to correct, any condition which the City reasonably believes to be a hazard to persons or property, then immediately upon oral or written notice to any supervisory or similar personnel of Contractor, City may, but shall not be required to, correct same at Contractor's expense. City shall confirm in writing any oral notice given within five (5) business days thereafter.

3.3. Storage. In the event the Project site has insufficient, inadequate, and/or improper storage space, it shall be the responsibility of the Contractor to secure, provide and maintain at the Contractor's sole cost and expense **(i)** adequate off-site storage space for equipment, materials, incidentals, etc., and **(ii)** all associated delivery and transportation services. In either event, the Contractor shall assume full responsibility for equipment, materials, incidentals, etc. until both title and risk of loss pass to the City pursuant to Section 8 of this Contract.

3.4. Working Hours. Contractor's Working hours shall be 24 hours/7 days a week as needed by the City.

3.5. Cleaning Up. The Contractor shall at all times keep the Project site free from accumulation of waste materials or rubbish caused by Contractor's employees or subcontractors, and at the completion of the work shall remove all rubbish from and about the Project and all tools, scaffolding and surplus materials and shall leave the Project site "broom clean" or its equivalent, unless more exactly specified. In case of dispute, the City may remove the rubbish and charge the cost to the Contractor.

3.6. Publicity. Contractor agrees not to deliberately disclose the fact that the City has entered into or terminated this Contract or disclose any of the terms of the Contract or use the City's name in connection with any publicity, unless the City gives prior written consent to such use of the City's name in each instance.

3.7. Standard of Performance. All Contractor labor, materials, supplies, components, equipment, reports, plans, specifications, drawings, deliverables, incidentals, etc., required to be furnished or delivered under this Contract shall conform

in all respects with the requirements set forth in this Contract and shall meet or exceed those standards generally recognized in the Contractor's craft and trade in the State of Connecticut. City specified manufacturer and/or brand name substitution desired by the Contractor shall be made only with the prior written consent of an authorized representative of the City's Using Agency.

3.7.1 In carrying out the Project, the Contractor must employ such methods or means as will not cause any interruption of or interference with the work of any other contractor, nor with the normal routine of the institution or agency operating at the Project site.

3.8. **Contractor's Employees.** The Contractor shall at all times enforce strict discipline and good order among its employees, and shall not employ on the work any unfit person or anyone not skilled in the work assigned. The Contractor shall not, without the prior written approval of the City's Using Agency, substitute, terminate, replace or otherwise remove any Contractor employee expressly named, identified or required in this Contract.

3.9. Subsurface/Unknown Site Conditions. If Project site conditions are encountered which are **(i)** subsurface or otherwise concealed physical conditions or other conditions which differ materially from those indicated in the Contract Documents, or **(ii)** unknown conditions of an unusual nature which differ materially from those ordinarily found to exist and generally recognized as inherent or common in construction activities of the character provided for in this Contract, then prompt notice by the observing party shall be given to the other party to this Contract before Project site conditions may be disturbed. The Contractor shall thereafter wait for written instructions from the City before proceeding with regard to such conditions.

3.10. Surveys. All surveys required under this Contract shall be performed by a State of Connecticut duly licensed land surveyor. Unless expressly stated to the contrary in Section 1 of this Contract and **Attachment A**, the Contractor shall perform all layout work, all field measurements and all construction staking required, necessary or prudent for the satisfactory prosecution of the Contractor's obligations under this Contract.

3.11. Permits and Licenses. Unless expressly stated to the contrary in Section 1 of this Contract and **Attachment A**, the Contractor shall secure and obtain all permits and all licenses required, or necessary, or prudent for the performance of the Contractor's obligations under this Contract, and for the City's occupancy, use, and operation of the Project.

3.12. Manufacturer's Directions. Where it is required in this Contract that materials, products, processes, equipment or the like be installed or applied in accord with manufacturer's directions, specifications or instructions, it shall be construed to

mean that the said application or installation by the Contractor shall be in strict accord with printed instructions furnished by the manufacturer of the material concerned for use under conditions similar to those at the Project site. One (1) copy of such instructions shall be furnished to the City.

3.13. Review by the City. The Contractor shall permit the City and the City's duly authorized representatives and agents to review, at any time, all work performed under the terms of this Contract at any stage of the Project.

3.14. Records Maintenance. The Contractor shall maintain or cause to be maintained complete records documenting compliance with its obligations under the Connecticut General Statutes, the regulations of the Commission on Human Rights and Opportunities, and this Contract, including records of good-faith-efforts, subcontractor solicitations, bids received, awards, payments, documents relative to charges, costs, expenses fees, alleged breaches of contract, settlement of claims or other matters pertaining to the Contractor's demand for payment, workforce information, certifications, correspondence and filings with the Commission on Human Rights and Opportunities, for the period required by applicable law and regulations of the Commission on Human Rights and Opportunities.

4. Responsibilities of the City and City Reservation of Rights. Upon the City's receipt of Contractor's written request for specific information, the City will provide the Contractor with existing documents, data and other materials the City agrees are necessary and appropriate to the services to be performed by the Contractor hereunder and the City will endeavor to secure, where feasible and where the City agrees it is necessary and appropriate, materials or information from other sources requested by the Contractor for the purpose of carrying out the services under this Contract.

4.1. The City may, in its sole discretion, designate person(s) to act as the City's Project Engineer(s) and/or Manager(s) and the City may, in its sole discretion, define such person(s) authority and responsibilities.

4.2. The City reserves the right to **(i)** perform work related or unrelated to the Project with the City's own forces adjoining, adjacent to, or in the vicinity of, the Project site and/or **(ii)** let separate contracts related or unrelated to the Project for work and services adjoining, adjacent to, or in the vicinity of, the Project site. In such event, the Contractor shall afford all such parties reasonable opportunity for storage of materials and equipment and for the uninterrupted provision and delivery of such parties' work and/or services. The Contractor shall cooperate with such parties and in the case of a dispute, the decision of the City shall be complied with by all.

5. Contract Time. The Contractor shall be available to commence work upon full execution of this Contract (the "Effective Date") and shall complete all work and services

required under this Contract by **June 30, 2029** and in accordance with all Project Phase Completion Dates, Project Milestones, and Substantial and Final Completion Dates identified below and in any fully executed Task Order(s) issued under this Contract ("Contract Time"):

Project Milestone – Response Time: Contractor shall respond to any and all emergency service requests by the City within two (2) hours of receipt of a phone call, text, e-mail or other communication by the City. Failure to respond to an emergency service request by the City shall be considered a "for cause" basis for termination under Section 16.4.1 of this Contract.

Project Milestone – Mobilization: Contractor shall mobilize its staff and equipment at the location of the emergency within four (4) hours of receipt of a phone call, text, e-mail or other communication by the City requesting emergency service.

5.1. Option Periods. The parties hereto shall have the option to extend this Contract pursuant to the same terms and conditions stated herein for up to two (2) additional one (1) year terms, Option #1 for a one (1) year period commencing the day after the Initial Term of this Contract and Option #2 for a one (1) year period commencing the day after Option #1's term expires. Said Options shall be exercised by mutual written consent of the parties hereto prior to the expiration of the preceding term.

5.1.1. As used in this Agreement, "Contract Time" shall include the Initial Contract Term plus any Option Year(s) elected by the City.

5.2. Delay Damages

5.2.1 Time is and shall be of the essence for all Project Phase Completion Dates, Milestones, Substantial and Final Completion Date. The Contractor further agrees that the Project shall be prosecuted regularly, diligently and uninterruptedly and at such rate of progress as will insure full completion thereof within the Contract time stated above. It is expressly understood and agreed, by and between the Contractor and City, that the Phase Completion Dates, Milestones, Substantial and Final Completion Date are reasonable for the completion of the Project.

5.2.1.1 The Contractor shall pay to the City the sum of the greater of **Five Hundred Fifty Dollars and Zero Cents ($500.00)** per calendar day for each and every calendar day for which the Contractor is in default in completing the work beyond the Final Completion Date, Substantial Completion Date, Milestones and Phase Completion Dates, as set forth in Section 5, or the actual damages incurred by the City caused by the delay. The preceding sum is hereby agreed upon not as a penalty, but as delay damages for the delay that the City shall suffer due to such default.

5.2.1.1.1 The Contractor shall pay to the City the sum of the greater of **Five Hundred Dollars and Zero Cents ($500.00)** per hour for each and every hour for which the Contractor is late in responding to and/or mobilizing staff and equipment in response to the City's request for emergency services; or the actual damages incurred by the City caused by the delay.

5.2.1.2 The City shall have the right to recover all damages pursuant to any remedy at law or equity including but not limited to deducting the amount of any such damages from any monies due the Contractor under this Contract. The Contractor understands that if the entire Work or of any portion of the Work that the City has agreed to accept separately, if any, is not attained by the applicable completion dates as set forth in the entire Section 5, the City will suffer damages, which are difficult to specify accurately and ascertain. Delay damages based upon delay shall be assessed to compensate the City for all actual loss sustained by the delay, including, but not limited to, loss of use, increased cost of material or services to complete the project, loss of State funding, all other another actual expense, and all other damages allowed by law, including attorney's fees.

5.3 No Damage for Delay

In no event shall the Contractor be entitled to any compensation or recovery of any damages in connection with any Delay, including, without limitation, consequential damages, lost opportunity damages, attorney's fees or other, similar remuneration. The City's exercise of any of its rights or remedies under the Contract Documents, including without limitation, ordering changes in the Work, or directing suspension, rescheduling or correction of the Work, regardless of the extent or frequency of the City's exercise of these rights has been contemplated by the parties and shall not be construed as an exception.

6. Compensation. The City shall compensate the Contractor for satisfactory provision of all of the goods and services set forth in this Contract as follows in this Section 6. No claims for additional compensation will be considered for conditions made known to the Contractor prior to bidding. No claims for additional compensation will be considered on account of failure of the Contractor to completely inform itself as required herein above.

6.1. Fee Schedule. The fee payable to the Contractor shall be in accordance with the Contractor's response to **RFP Number 8897**, Contractor's Cost Schedule, dated August 19, 2026 (signed August 20, 2026)* and consisting of 3 pages, and 1 page letter from Contractor dated August 27, 2026 (all attached hereto), and all applicable fully executed Task Orders and Purchase Orders.

*The parties hereto agree that though the Contractor submitted the wrong Attachment E Cost Schedule with its **RFP Number 8897** submission, it addresses the requested cost information included in the correct Attachment E Cost Schedule, and is to be used as the Attachment E Cost Schedule for this Contract**.**

6.2. Retainage. At the City's sole discretion, it hereby reserves the right to withhold as retainage five (5%) percent of any payment (or monetary sum otherwise required by law) owed to the Contractor to be withheld from payments to the Contractor otherwise payable to the Contractor until such time as the Contractor's work and services to be provided under this Contact are fully completed and accepted in writing by the City. The retainage does not does not include additional sums that the City may withhold due to the Contractor's failure to comply with provisions of this Contract.

6.2.1 On public works contracts valued at one million dollars or more or for projects for which a construction manager has entered into a public works contract providing for a guaranteed maximum price valued at one hundred fifty thousand dollars or more, C.G.S. § 46a-68e requires that the awarding agency "shall withhold two percent of the total contract price per month from any payment made to such contractor until such time as the contractor has submitted all compliance reports required by the Commission." The term "awarding agency" is defined by C.G.S. § 4a-60g as "a state agency or political subdivision of the state, including a municipality or quasi-public agency.

6.2.2 Contractor is hereby put on notice that CHRO's written approval is required prior to the City releasing withheld retainage per Section 6.2.1.

6.2.3 The two percent (2.0 %) provided in Section 6.2.1 is part of the five percent (5.0 %) retainage provided in Section 6.2, not in addition to such retainage.

6.3. Limitation of Payment. Compensation to the Contractor is limited to those fees set forth in Section 6.1. of this Contract and is further limited to work **(i)** performed in fact, **(ii)** conforming with this Contract, and **(iii)** accepted in writing by a duly authorized City employee. Such compensation shall be paid by the City upon its review and approval of the Contractor's invoices for payment and review of the Contractor's work.

6.3.1 Funding. In the event this Contract is funded, in whole or in part, by Federal and/or State monies, grants, loans, etc, all City payment(s) shall fully comply with all relevant Federal and State statutes and regulations. In the event this Contract is 100% funded by Federal and/or State monies, grants, loans, etc., the aggregate sum of all City payments shall not exceed the aggregate sum of such funding.

6.3.2 The Contractor and its affiliates are hereby provided with notice that the City reserves the right, in the City's sole discretion, to offset, withhold, or otherwise reduce City payment(s) to the Contractor, in an amount equaling the sum or sums of money the Contractor and/or its affiliates is/are, or become delinquent or in arrears on, regarding the Vendor's and/or its affiliates real and personal property taxes and other payment obligations to the City.

6.4. Proposal Costs. All costs of the Contractor in preparing its response for **RFP Number 8897** shall be solely borne by the Contractor and are not included in the compensation to be paid by the City to the Contractor under this Contract or any other agreement.

6.5. Payment for Services, Materials, Appliances, Employees. The Contractor shall be responsible to the City for the suitability of services, materials and equipment furnished to comply fully with the requirements set forth in this Contract. The Contractor shall promptly pay all employees as their pay falls due, shall pay promptly as they fall due all bills for subcontractors, materials, supplies and services going into the work, and all bills for insurance, bonds, Worker's Compensation coverage, Federal and State Unemployment Compensation, and Social Security charges applicable to this Project. Before final City payment is made, the Contractor shall furnish to the City a sworn, notarized, affidavit stating that all of the foregoing payment obligations have been fully completed.

6.6. Liens. Neither the City's final payment nor any part of the retained percentage, if any, shall become due until the Contractor shall deliver to the City a complete release of all liens arising out of this Contract, or receipts in full in lieu thereof, and, in either case, an affidavit that so far as the Contractor has knowledge or information, the releases and receipts include all the labor and material for which a lien could be filed; but the Contractor may, if any subcontractor refuses to furnish a release or receipt in full, furnish a bond satisfactory to the City, to indemnify it against any lien. If any lien remains unsatisfied after all payments are made, the Contractor shall refund to the City all moneys that the City may be compelled to pay in discharging such a lien, including all costs and a reasonable attorney's fee.

6.7. Contractor's Certificate of Completion. Upon the Contractor's **(i)** completion of all Project milestones, and **(ii)** Substantial Completion of the Project, and **(iii)** Final Completion of the Project, the Contractor shall, in each instance, file with the City a written, notarized affidavit setting forth the amount of Project work performed. The City reserves the right to verify or challenge by any reasonable means the accuracy of said affidavit.

6.8. Final Payment. All prior estimates and City payments, including those relating to extra or additional work, retainage(s), and holdback(s), shall be subject to correction by this final payment which is throughout this Contract called "Final Payment". No

payment, final or partial, shall act as a release to the Contractor or its surety from any Contractor obligation(s) under this Contract.

6.9. Clean Water Fund Project Requirements. In the event this Contract is funded in whole or in part, is reliant upon, or falls within the jurisdiction of the Clean Water Fund and its statutes, regulations and rules, the Contractor shall:

6.9.1 submit Applications for Payment in accordance with the following:

The City must receive the Contractor's Application for Payment by the City's or its designee's, review and recommendation for payment, by the fifteenth calendar day of the month to receive payment within the next 50 days. If not received by the fifteenth calendar day of the month, payment can not be made until 50 days after the fifteenth calendar day of the subsequent month. The Contractor shall provide at the City's request, reasonable documentation to substantiate Contractor's Application for Payment.

6.9.2 Progress and Final Payments

The City will make progress payments on account of the Contract Price on the basis of the Contractor's Applications for Payment, monthly during construction as provided below. All progress payments will be on the basis of the progress of the Scope of Services as determined by the City, according to the schedule of values provided for in the Contract Documents, and approved by the City. Prior to Substantial Completion, progress payments will be limited to an amount equal to 95 percent of the value of the Scope of Services completed. Upon Substantial Completion, the City will pay the amount as specified in the Contract Documents.

7. Warranty of the Contractor. The Contractor warrants to the City that all materials, supplies, components, equipment, etc. furnished under this Contract shall be new and of good quality, except as otherwise expressly stated and permitted by the City elsewhere in this Contract. The Contractor warrants that none of its work shall be defective. The Contractor shall be liable to repair and install and/or replace without charge any service, component, equipment or part thereof which is defective or does not conform with this Contract within the greater of **(i) 365** calendar days after the City delivers its written notice of its acceptance of each Project identified in a fully executed Task Order and statement therein establishing the final completion date, or **(ii)** that time period or date expressly stated elsewhere in this Contract or **Attachment A**.

7.1. The Contractor further warrants that all materials, supplies, services, components, equipment, reports, plans, drawings, deliverables, incidentals, etc., shall be free from any and all defects caused by faulty design, faulty material or poor workmanship. The Contractor shall supply to the City copies of any written

manufacturer's warranties and guarantees. The Contractor's foregoing warranty obligations are in addition to, and not a limitation of, all manufacturer's warranties and guarantees, and any other remedy stated in this contract or otherwise available to the City under applicable law.

8. Passing of Title and Risk of Loss.

8.1. City beneficial use of Project equipment, materials, site-work, etc. prior to the Contractor's final completion of the Project or prior to the City's final payment for the Project shall neither act to vest title in the City nor act to transfer risk of loss from the Contractor to the City. Said title and risk shall pass to the City upon the City's final payment for the Project.

8.2. Contractor and its insurer shall assume the risks of loss or damage to the equipment up to and including the date title passes, except that City shall be responsible for loss or damage caused by City's gross negligence.

8.3. After Project equipment, materials, etc. are delivered to the Project work-site and become operable or functional, the Contractor shall not thereafter remove any such equipment, materials, etc. from the Project work-site without securing the prior written consent of an authorized City Using Agency employee.

9. Indemnification.

9.1. The Contractor shall indemnify, defend, and hold harmless the City, City's Boards, and Board of Education, commissions, agents, officials and employees from and against all claims, suits, damages, losses, judgments, costs and expenses including attorney's fees arising out of or resulting from the delivery of the labor, services, equipment, materials, reports, plans, specifications, design, drawings, deliverables, incidentals, etc. provided that any such claims, suits, damages, losses, judgments, costs or expenses **(i)** are attributable to bodily injury, sickness, disease or death, or to injury to or destruction of tangible property, including the loss of use resulting there from, **(ii)** are alleged to be caused in whole or in part by any willful, intentional, negligent, or reckless act or omission of the Contractor, its employees, any subcontractor or consultant, anyone directly or indirectly employed by any of them or anyone for whose acts any of them may be liable, regardless of whether or not it is caused in part by a party indemnified hereunder; **(iii)** enforcement action or any claim for breach of the Contractor 's duties hereunder or **(iv)** claim for intangible loss(es) including but not limited to business losses, lost profits or revenue, regardless of whether or not it is caused in part by a party indemnified hereunder.

9.2. In any and all claims against the City, Board of Education or any of City's boards, agents, employees or officers by the Contractor or any employee of the Contractor , any subcontractor or consultant, anyone directly or indirectly employed by

any of them or anyone for whose acts any of them may be liable, the indemnification obligation under Paragraph 9 above, shall not be limited in any way by any limitation on the amount or type of damages, compensation or benefits payable by or for the Contractor or any subcontractor under Worker's Compensation Acts, disability benefit acts or other employee benefit acts.

9.3. The Contractor understands and agrees that any insurance required by this Contract, or otherwise provided by the Contractor, shall in no way limit the responsibility to indemnify, defend, keep and hold harmless the City, the Board of Education, any of City's boards, agents, employees as provided in this Contract.

9.4. The Contractor expressly understands and agrees that any performance bond or insurance protection required by this Contract, or otherwise provided by the Contractor, shall in no way limit the responsibility to indemnify, keep and save harmless and defend the City and the City's boards, agents, employees or officers as provided herein.

9.5. Royalties and Patents. The Contractor shall, for all time, secure to the City the free and undisputed right to the use of any and all patented articles and methods used in the work and shall defend at Contractor's own expense any and all suits for infringement or alleged infringement of such patents, and in the event of adverse award under patent suits, the Contractor shall pay such awards and hold the City harmless in connection with any patent suits that may arise as a result of installations made by the Contractor and as to any award made thereunder.

9.6. In the event this Contract and/or the Contractor's, or its subcontractor, work and services provisioned hereunder is/are subject to the provisions of any Federal or State statute or regulations, or the City Charter or City Ordinance, the Contractor shall indemnify, defend and hold harmless the City from any fine, penalty or other amounts imposed on the City under said statutes, regulations, Charter or Ordinances, if caused by Contractor, or its subcontractor, omission or commission.

10. Contract Bonds. In the City's sole discretion, the City may elect to require the Contractor to furnish to the City a performance bond or payment bond or both, each bond written for a penal sum equaling the "Total Compensation" amount of each Task Order, in a form and with a surety, acceptable to the City. If the City elects to require such bonds, the City shall include such requirement in any Task Order for which such bonds will be required by the City. The Contractor shall then furnish to the City any required bond prior to the issuance of the corresponding Purchase Order by the City. The bonds shall continue in effect for the greater of **(i)** the warranty period set forth in Section 7 of this Contract, or **(ii)** 365 calendar days after City delivers its written notice of its acceptance of all projects identified in any fully executed Task Order.

11. Contractor's Insurance.

11.1. The Contractor shall not commence work under this Contract until all insurance required under this Section 11 has been obtained by the Contractor and such insurance has been approved by the City. The Contractor shall not allow any subcontractor to commence work on any subcontract until all insurance required of any such subcontractor has been so obtained and approved by the City. Insurance shall be provided by insurers, satisfactory to the City and authorized to do business in the State of Connecticut, an "A-" Best's Rating and at least a Class V3 or better financial size category as shown in the most current A.M. Best Company ratings.

11.2. At no additional cost to the City, the Contractor shall purchase and maintain the insurance coverages set forth below which shall protect the City from claims which may arise out of or result from the Contractor's obligation under this Contract, whether such obligations are the Contractor's or subcontractor or person or entity directly or indirectly employed by said Contractor or subcontractor, or by any person or entity for whose acts said Contractor or subcontractor may be liable.

11.3. Each insurance policy shall state that the insurance company shall agree to investigate and defend the insured against all claims for damages, even if groundless. If any insurance required herein is to be issued or renewed on a claims made form as opposed to an occurrence form, the retroactive date for coverage shall be no later than the commencement date of this Contract and shall provide that in the event of cancellation or non-renewal, the discovery period for insurance claims ("Tail Coverage") shall be available for at least 60 months.

11.4. The following policies with stated limits shall be maintained, in full force and effect, at all times during which the services are to be performed by the Contractor:

11.4.1 General Liability Insurance:
$1,000,000.00 per Each Occurrence
$2,000,000.00 General Aggregate
$2,000,000.00 Products/Completed Operations Aggregate
Providing coverage to protect the City for all damages arising out of bodily injuries, sickness to or death of all persons in any one accident or occurrence and for all damages arising out of destruction of property in any one accident or occurrence.

11.4.2 Automobile Liability Insurance:
$1,000,000.00 combined single limit (CSL)
Providing coverage to protect the City with respect to claims for damage for bodily injury and or property damage arising out of ownership, maintenance, operation, use or loading and unloading of any auto including hired & non-owned autos.

11.4.3 Workers' Compensation: Statutory Limits within the State of Connecticut: Employers' Liability:
EL Each Accident **$1,000,000.00**
EL Disease Each Employee **$1,000,000.00**
EL Disease Policy Limit **$1,000,000.00**

11.4.4 Excess/Umbrella Liability Insurance:
$1,000,000.00 each Occurrence
$1,000,000.00 Aggregate

11.4.5 Contractors Pollution Liability Insurance
$1,000,000.00 each Occurrence/Claim
$1,000,000.00 Aggregate
There will be no exclusion for Hazardous Materials, including Asbestos and Lead

11.5. Failure to Maintain Insurance: In the event the Contractor fails to maintain the minimum required coverage as set forth herein, the City may at its option purchase same, and offset the Contractor's invoices for the cost of said insurance.

11.6. Cancellation: The City of Waterbury shall receive written notice of cancellation from the Contractor at least thirty (30) calendar days prior to the date of actual cancellation, regardless of the reason for such cancellation.

11.7. Certificates of Insurance: All of the Contractor's Liability Insurance policies, except Workers' Compensation and Professional Liability, shall be endorsed to add the City as an additional insured on a primary and noncontributory basis. All policies shall include a Waiver of Subrogation except Professional Liability. The insurance afforded the additional insured shall be primary and non-contributory insurance and the coverage and limits provided under the Contractor's policies shall not be reduced or prorated by the existence of any other insurance applicable to any loss the additional insured may have suffered. Prior to the execution of this Contract by the City, the Contractor shall furnish to the City, subject to City approval, certificate(s) of insurance and Additional Insured Endorsement and Waiver of Subrogation Endorsement verifying the above coverages, including the naming of the City of Waterbury, as follows: **"The City of Waterbury is listed as additional insured on a primary and noncontributory basis on all policies except Workers' Compensation and Professional Liability. All policies shall include a Waiver of Subrogation."** The City's Request for Proposal Number must be shown on the certificate of insurance to assure correct filing. The Contractor must supply replacement/renewal certificates at least 30 days prior to the expiration of the policy(ies). Said certificates shall contain a provision that coverage afforded under the policies shall not be cancelled or reduced for

any reasons unless notice of than thirty (30) calendar days has been mailed to the City's Using Agency and a copy to the City's Office of Corporation Counsel, 235 Grand Street, Waterbury, CT 06702.

11.8. No later than thirty (30) calendar days after Contractor receipt, the Contractor shall deliver to the City a copy of the Contractor's insurance policies and endorsements and riders.

11.9 If any policy is written on a "Claims Made" basis, the policy must be continually renewed for a minimum of two (2) years from the completion date of this contract. If the policy is replaced and/or the retroactive date is changed, then the expiring policy must be endorsed to extend the reporting period for claims for the policy in effect during the contract for two (2) years from the completion date.

11.10 Original, completed Certificates of Insurance must be presented to the City of Waterbury prior to contract issuance. Consultant agrees to provide replacement/renewal certificates at least thirty (30) calendar days prior to the expiration date of the policies. Should any of the above described policies be cancelled, limits reduced or coverage altered, thirty (30) calendar days written notice must be given to the City of Waterbury.

12. Conformance with Federal, State and Other Jurisdictional Requirements. By executing this Contract, the Contractor represents and warrants that, at all pertinent and relevant times to the Contract, it has been, is and will continue to be in full compliance with all applicable statutes, acts, ordinances, guidelines, resolutions, orders, judgments, decrees, injunctions, rules, and regulations of all government authorities applicable to performance by the Contractor of services hereunder, including those having jurisdiction over its registration and licensing to perform services hereunder; including, but not limited to, the following: EQUAL EMPLOYMENT OPPORTUNUTY; COPELAND ANTI-KICKBACK ACT, as supplemented in the Department of Labor Regulations (29 CFR, Part 3); DAVIS BACON ACT as supplemented by Department of Labor Regulations (29 CFR Part 5); Section 103 and 107 of the Contract Work Hours and Safety Standards Act, as supplemented by the Department of Labor Regulations (29 CFR Part 5); the HOUSING and COMMUNITY DEVELOPMENT ACT of 1974, as amended; TITLE 31 and Section 12-430(7) of the State of Connecticut General Statutes. All applicable sections of the City Charter and Code of Ordinances are incorporated by reference made a part hereof.

12.1. Taxes-Federal, State and Local. The City is exempt from Federal Excise and Transportation, State and Local Sales and Use Taxes, including without limitation, taxes that would otherwise be imposed upon the Contractor for transactions required or necessitated hereunder between it and its subcontractors, suppliers, etc. The Contractor remains liable, however, for any applicable tax obligations it incurs. Moreover, the Contractor represents that the bid and pricing contained in this Contract do not include the amount payable for said taxes.

12.2. Labor and Wages-Federal and State. The Contractor and its subcontractors shall conform to Federal and State of Connecticut labor laws, and all other laws, ordinances, and legal requirements affecting the work in Connecticut.

12.2.1 The Contractor is aware of, and shall comply with, the provisions of Title 31, §53 of the Connecticut General Statutes, latest revision (the "Act"), concerning the payment of minimum wages for work on public facilities. The provisions of the Act are hereby incorporated by reference and made a part of this Contract. The Act provides that the Connecticut prevailing wage law applies to certain remodeling, refurbishing, alteration, repair and new construction. The wages paid on an hourly basis to any person performing the work of any mechanic, laborer or worker on the work herein contracted to be done and the amount of payment or contribution paid or payable on behalf of each such person to any employee welfare fund, as defined in Conn. Gen. Stat. 31-53(i), shall be at a rate equal to the rate customary or prevailing for the same work in the same trade or occupation in the town in which such public works project is being constructed. Any contractor who is not obligated by agreement to make payment or contribution on behalf of such persons to any such employee welfare fund shall pay to each mechanic, laborer or worker as part of such person's wages the amount of payment or contribution for such person's classification on each pay day.

12.2.2 The Contractor is aware of, and shall comply with, the provisions of both the Federal Davis-Bacon Act and the Federal American Recovery and Reinvestment Act of 2009, the provisions of both acts hereby incorporated by reference and made a part of this Contract. The Federal Davis-Bacon Act provides that Federal wage rate laws apply to certain federally funded contracts. The American Recovery and Reinvestment Act ("ARRA") provides that Federal wage rate laws apply to all ARRA funded contracts regardless of the contract's dollar value.

12.3. Compliance with Chapters 34, 38, and 39 of the Code of Ordinances of the City. By executing this Contract, the Contractor represents and warrants that, at all pertinent and relevant times to the Contract, it has been, is and will continue to be in full compliance with the provisions of Chapters 34, 38, and 39 of the Code of Ordinances of the City and well as any other relevant provisions of the Charter and the Code of Ordinances.

12.4. Compliance with CONN. GEN. STAT. § 4a-60g, as amended by Public Act 25-168, and as may be amended from time to time.

12.4.1 Definitions – For purposes of Section 12.4 and Section 13.3 of this Contract:

i. "Awarding agency" means a state agency or political subdivision of the state, including a municipality or quasi-public agency.

ii. "Minority business enterprise" means any small contractor (A) fifty-one per cent or more of the capital stock, if any, or assets of which are owned by a person or persons who (i) exercise operational authority over the daily affairs of the enterprise, (ii) have the power to direct the management and policies and receive the beneficial interest of the enterprise, (iii) possess managerial and technical competence and experience directly related to the principal business activities of the enterprise, and (iv) are members of a minority, as defined in subsection (a) of section 32-9n, or are individuals with a disability, or (B) which is a nonprofit corporation in which fifty-one per cent or more of the persons who exercise operational authority over the enterprise, (i) possess managerial and technical competence and experience directly related to the principal business activities of the enterprise, (ii) have the power to direct the management and policies of the enterprise, and (iii) are members of a minority, as defined in this subsection, or are individuals with a disability.

iii. "Public works contract" means any agreement (A) for construction, rehabilitation, conversion, extension, demolition or repair of changes or improvements in real property, and (B) that is financed in whole or in part by the state, including, but not limited to, matching expenditures, grants, loans, insurance or guarantees, where such funding equals one hundred fifty thousand dollars or more.

iv. "Small contractor" means (A) any contractor, subcontractor, manufacturer, service company or corporation that (i) maintains its principal place of business in the state, and (ii) is registered as a small business in the federal database maintained by the United States General Services Administration, as required to do business with the federal government, or (B) any nonprofit corporation that (i) maintains its principal place of business in the state, (ii) that had gross revenues not exceeding twenty million dollars in the most recently completed fiscal year prior to such application, and (iii) that is independent.

12.4.2 The Contractor and subcontractor shall comply with the specific requirements of the State of Connecticut Set Aside Program, CONN. GEN. STAT. § 4a-60g, **amended by Public Act 25-168, and as may be amended from time to time,** if the public works contact awarded to the Contactor is funded as provided in 12.4.3 below

12.4.3 The Contactor shall be subject to the following set-aside requirements if the public works contact, is funded in whole or in part by the State of Connecticut, and is in excess of ONE HUNDRED FIFTY THOUSAND DOLLARS ($150,000.00).

12.4.4 Set-Aside requirements – Any contractor awarded a public works

contract, on the basis of competitive bidding procedures, shall comply with the following Set –Aside requirements:

i. This contract is subject to state contract compliance requirements, including nondiscrimination statutes and spending allocation goals. There is $TBD in state-funding for this project. State law requires project-specific goals be set for this project based on the project's needs and available Small Business Enterprises ("SBEs") and Minority Business Enterprises ("MBEs"). The SBE goal for this project is N/A. The MBE goal for this project is N/A. The selected contractor must demonstrate good faith effort to meet the spending allocation goals.

12.4.5 No Affiliated Subcontracting to Satisfy Goal. The Contractor shall not subcontract with an affiliated person or entity in violation of Conn. Gen. Stat. § 4a-60g. An affiliated contractor or subcontractor shall not be credited toward the City's spending-allocation goals where such credit is prohibited by law.

12.4.5.1 Changes in Subcontractors. The Contractor shall not replace, terminate, materially reduce the work of, or otherwise alter the participation of a small contractor or minority business entity identified for purposes of satisfying a spending allocation goal without providing the City with prior written notice and satisfying all requirements imposed by the Commission on Human Rights and Opportunities and applicable law. The Contractor shall document good-faith efforts to replace any subcontractor with another qualified certified contractor where required by law or the Commission on Human Rights and Opportunities**.**

12.4.6 Failure of the Contractor or subcontractor to comply with the State of Connecticut Set-Aside program requirements, including, but not limited to, good faith efforts plan and compliance report submissions, shall be a material breach of this Contract. If required by the City, the Contractor shall provide the City with evidence of submission and disposition of all required State of Connecticut Set-Aside programs reports.

13. Discriminatory Practices. In performing this Contract, the Contractor shall not discriminate against any employee or applicant for employment, with respect to his or her hire, tenure, terms, conditions or privileges of employment, or any matter directly or indirectly related to employment, because of race, color, sex, age, religious creed, disability, national origin or ancestry, marital status, family status, prior psychiatric treatment, health care, military status or source of income or because of a handicap that is unrelated to the employee's or the applicant's ability to perform the duties of a particular job or position. Subcontracts with each subcontractor shall contain a provision requiring non-discrimination in employment as herein specified. This covenant is required pursuant to §93.04 of the Code of Ordinances of the City

and any breach thereof may be regarded as a material breach of this Contract. Said provisions with subcontractors shall require conformity and compliance with all local, state and federal laws, rules and regulations and Executive orders pertaining to discrimination and equal opportunity requirements.

13.1. Discrimination Because of Certain Labor Matters. No person employed on the work covered by this Contract shall be discharged or in any way discriminated against because such person has filed any complaint or instituted or caused to be instituted any proceeding or has testified or is about to testify in any proceeding under or related to the labor standards applicable hereunder to its employer.

13.2. Equal Opportunity. In its execution of the performance of this Contract, the Contractor shall not discriminate and shall comply with applicable laws prohibiting discrimination on the grounds of race, color, religion, sex, national origin or citizenship status, age or handicap. The Contractor agrees to comply with all local, state and federal laws, rules and regulations and Executive orders pertaining to discrimination and equal opportunity requirements, and will require the same of all subcontractors

13.3. Affirmative Action/Nondiscrimination.

13.3.1. Pursuant to CONN. GEN. STAT. § 4a-60, as amended by Public Act 25-168, and as may be amended from time to time, the following are required for every Public Works Contract:

(b) Except as provided in section 10a-151i, every contract to which an awarding agency is a party shall contain the following provisions:

(1) The contractor agrees and warrants that in the performance of the contract such contractor will not discriminate or permit discrimination against any person or group of persons on the grounds of race, color, religious creed, age, marital status, national origin, ancestry, sex, sexual orientation, gender identity or expression, status as a veteran, status as a victim of domestic violence, intellectual disability, mental disability or physical disability, including, but not limited to, blindness, unless it is shown by such contractor that such disability prevents performance of the work involved, in any manner prohibited by the laws of the United States or of the state of Connecticut; and the contractor further agrees to take affirmative action to ensure that applicants with job-related qualifications are employed and that employees are treated when employed without regard to their race, color, religious creed, age, marital status, national origin, ancestry, sex, gender identity or expression, sexual orientation, status as a veteran, status as a victim of domestic violence, intellectual disability, mental disability or physical disability, including, but not limited to, blindness, unless it is shown by such contractor that such disability prevents performance of the work involved;
(2) The contractor agrees, in all solicitations or advertisements for employees placed by or on behalf of the contractor, to state that it is an "affirmative action-equal opportunity employer" in accordance with regulations adopted by the Commission on Human Rights and Opportunities;
(3) The contractor agrees to provide each labor union or representative of workers with which

such contractor has a collective bargaining agreement or other contract or understanding and each vendor with which such contractor has a contract or understanding, a notice to be provided by the Commission on Human Rights and Opportunities advising the labor union or workers' representative of the contractor's commitments under this section, and to post copies of the notice in conspicuous places available to employees and applicants for employment;
(4) The contractor agrees to comply with each provision of this section and sections 46a-68e and 46a-68f and with each regulation or relevant order issued by said commission pursuant to sections 46a-56, 46a-68e, 46a-68f and 46a-86; and
(5) The contractor agrees to provide the Commission on Human Rights and Opportunities with such information requested by the commission, and permit access to pertinent books, records and accounts, concerning the employment practices and procedures of the contractor as relate to the provisions of this section and section 46a-56.

(c) If the contract is a public works contract, the contractor agrees and warrants that he or she will make good faith efforts to employ minority business enterprises as subcontractors and suppliers of materials on such public works project.

(d) Except as provided in section 10a-151i:
(1) Any contractor who has one or more contracts with an awarding agency or who is a party to a public works contract shall include a nondiscrimination affirmation provision certifying that the contractor understands the obligations of this section and will maintain a policy for the duration of the contract to assure that the contract will be performed in compliance with the nondiscrimination requirements of subsection (b) of this section. The authorized signatory of the contract shall demonstrate his or her understanding of this obligation by (A) initialing the nondiscrimination affirmation provision in the body of the contract, (B) providing an affirmative response in the required online bid or response to a proposal question which asks if the contractor understands its obligations, or (C) signing the contract.

(e) Determination of the contractor's good faith efforts shall include, but shall not be limited to, the following factors: The contractor's employment and subcontracting policies, patterns and practices; the timing and value of bids; affirmative advertising, recruitment and training; technical assistance activities and such other reasonable activities or efforts as the Commission on Human Rights and Opportunities may prescribe that are designed to ensure the participation of minority business enterprises in public works projects.

(f) The contractor shall develop and maintain adequate documentation, in a manner prescribed by the Commission on Human Rights and Opportunities, of its good faith efforts.

(g) The contractor shall include the provisions of subsections (b) and (c) of this section in every subcontract or purchase order entered into in order to fulfill any obligation of a contract with the state, and in every subcontract entered into in order to fulfill any obligation of a public works contract, and such provisions shall be binding on a subcontractor, vendor or manufacturer, unless exempted by regulations or orders of the Commission on Human Rights and Opportunities.

13.3.2. Pursuant to CONN. GEN. STAT. § 4a-60a, as amended by Public Act 23-204, and as may be amended from time to time, the following are required for every Public Works Contract:

(a) Every contract to which an awarding agency is a party, every contract for a quasi-public agency project and every public works contract shall contain the following provisions:

(1) The contractor agrees and warrants that in the performance of the contract such contractor will not discriminate or permit discrimination against any person or group of persons on the grounds of sexual orientation, in any manner prohibited by the laws of the United States or of the state of Connecticut, and that employees are treated when employed without regard to their sexual orientation;

(2) The contractor agrees to provide each labor union or representative of workers with which such contractor has a collective bargaining agreement or other contract or understanding and each vendor with which such contractor has a contract or understanding, a notice to be provided by the Commission on Human Rights and Opportunities advising the labor union or workers' representative of the contractor's commitments under this section, and to post copies of the notice in conspicuous places available to employees and applicants for employment;

(3) The contractor agrees to comply with each provision of this section and with each regulation or relevant order issued by said commission pursuant to section 46a-56;

(4) The contractor agrees to provide the Commission on Human Rights and Opportunities with such information requested by the commission, and permit access to pertinent books, records and accounts, concerning the employment practices and procedures of the contractor which relate to the provisions of this section and section 46a-56; and

(5) Nondiscrimination affirmation provision. The Contractor understands the obligations of this section 13.3 and will maintain a policy for the duration of the Contract to assure that the Contract will be performed in conformance with the nondiscrimination requirements of this section 13.3. The authorized signatory of the Contract shall demonstrate his or her understanding of this obligation by either (A) initialing the nondiscrimination affirmation provision in the body of the Contract, [or] (B) providing an affirmative response in the required online bid or response to a proposal question which asks if the Contractor understands its obligations, or (C) signing the Contract.

14. Good Jobs Ordinance

14.1. Conformance With An Ordinance Concerning The Hiring Of Waterbury Residents On Certain Publicly-Funded Construction Projects.

14.1.1 The Contractors and its Subcontractors shall comply with the specific requirements of "An Ordinance Concerning the Hiring of Waterbury Residents on Certain Publicly-Funded Construction Projects" (the "Good Jobs Ordinance"), as may be amended from time to time and as set forth in Chapter 34 of the Code of Ordinances of the City. While the principal provisions of the ordinance are summarized as set forth in paragraphs C through H below, the Contractor does hereby acknowledge that it has reviewed a copy of the Good Jobs Ordinance and that it has read the Ordinance and that Contractor is familiar with the obligations imposed on the Contractor and each Subcontractor by the Good Jobs Ordinance.

14.1.2 Failure of the Contractor or its Subcontractors to comply with the Good Jobs Ordinance shall be a material breach of this Agreement.

14.1.3 This paragraph shall apply to a Covered Project, as that term is defined in the Good Jobs Ordinance, in the City with a value of $500,000.00 or greater and only to the extent permitted by federal and state law.

14.1.4 Definitions. For purposes of this paragraph:

i. "Administrator" shall be defined as it is in the Good Jobs Ordinance.

ii. "Apprentice" shall be defined as it is in the Good Jobs Ordinance.

iii. "Basic Skilled Worker" shall be defined as it is in the Good Jobs Ordinance.

iv. "Contractor" shall be defined as it is in the Good Jobs Ordinance.

v. "Covered Project" shall be defined as it is in the Good Jobs Ordinance.

vi. "Hiring Goal" shall be defined as it is in the Good Jobs Ordinance.

vii. "Resident" shall be defined as it is in the Good Jobs Ordinance.

viii. "Subcontractor" shall be defined as it is in the Good Jobs Ordinance and shall include the Contractor's direct subcontractor providing construction work and all lower tiered (level) providers of construction work.

14.1.5 Hiring Goals. If this Agreement requires the Contractor to perform work on a Covered Project, the Contractor and each Subcontractor shall have as its hiring goals:

i. at least thirty percent (30%) of its total worker hours performed by City Residents, and

ii. at least twenty-five percent (25%) of construction trade jobs shall go to Apprentices and/or Basic Skilled Workers, and

iii. at least seventy percent (70%) of all "new hires" (as that term is defined in the Good Jobs Ordinance) shall be "economically disadvantaged" individuals (as that term is defined in the Good Jobs Ordinance), and

iv. a minimum of five percent (5%) of the construction workforce labor hours will be local resident, minority artisans, and

v. a minimum of five percent (5%) of the construction workforce labor hours will be women, and

vi. a minimum of ten percent (10%) of the total work hours shall be allocated for minorities, or

vii. as may otherwise be required by any superseding Federal or State employment discrimination prohibition laws.

14.1.6 Good Faith Efforts. The Contractor and each Subcontractor shall engage in Good Faith Efforts to comply with the Hiring Goals. For the purposes of this paragraph, the term "Good Faith Efforts" shall have the same meaning as it does in the Good Jobs Ordinance.

The Contractor and each Subcontractor shall individually implement Good Faith efforts to satisfy the Hiring Goals.

14.1.7 Action Plan and Pre-Construction Meeting. Not later than fourteen (14) business days prior to the scheduled commencement date for construction, the Contractor shall submit a written plan-of-action to the City and to the Administrator of the Good Jobs Ordinance defining how the Contractor, and

each Subcontractor, shall implement Good Faith Efforts to fulfill the Hiring Goals. Each plan-of-action shall include the anticipated number of job positions required for the Work. Not later than five (5) business day prior to the commencement date of construction, the Contractor must attend a mandatory "pre-construction" meeting with the City to review all plans-of-action and other relevant materials. No construction work shall proceed absent this pre-construction meeting.

14.1.8 Other Contractor Obligations. In addition to the foregoing, the Contractor shall ensure that all Subcontractor contracts and agreements expressly set forth and state as binding obligations therein, subject to appropriate party name change, the above Hiring Goals and Good Faith Efforts. The Contractor shall be accountable for, and liable to the City for, Contractor and each Subcontractor compliance with Hiring Goals and Good Faith efforts.

i. The Contractor shall meet with the Administrator no less than four (4) weeks prior to the commencement of construction on a Covered Project and provide the Administrator with the number of job positions to be created by the project by trade and the qualifications by job tile.

ii. The Contractor shall be required to produce Contractor and Subcontractor documentation that may be required under the provisions of the Good Jobs Ordinance or that the City or the Administrator reasonably believes will assist the City or the Administrator with their evaluation of Hiring Goals and Good Faith Efforts.

iii. The Contractor shall deliver weekly certified payroll records to the City within five (5) working days of the end of each payroll period. Moreover, the Contractor shall require each Subcontractor to create weekly certified payroll records.

iv. The Contractor's and each Subcontractor's payroll records shall include the person-hours, the residential address, race, gender, hiring date, and apprentice (job) classification of all personnel employed under this Agreement and all Contracts and Sub-Contracts thereunder. The Contractor and each Subcontractor shall mark their respective final payroll period records as being final and be signed by an authorized officer or employee.

14.2 Liquidated Damages Applicable To Section 14.1

14.2.1 If the City finds that the Contractor, or a Subcontractor, has failed to achieve Hiring Goals during any five (5) day work period (Monday through Friday), the City shall:

i. issue a written notice to the Contractor specifying the matters constituting such failure and the time period within which Good Faith Efforts documentation must be delivered to the City for its evaluation.

ii. if the Good Faith documentation is not provided or, if provided, it fails to demonstrate compliance with Good Faith Efforts, the Contractor shall, for each failure by the Contractor or a Subcontractor to achieve the Hiring Goals during a full five day work period, pay to the City one thousand dollars ($1,000.00) as liquidated damages.

14.2.2 If the City finds that the Contractor, or a Subcontractor, has failed to deliver weekly certified payroll records to the City within five (5) working days of the end of each payroll period the Contractor shall, as liquidated damages pay one thousand dollars ($1,000.00) to the City for each week of ongoing violation.

14.2.3 The City shall provide the Contractor with an invoice identifying all sums due the City, as liquidated damages, as a result of the Contractor or a Subcontractor's failure to comply with the Good Jobs Ordinance as set forth above.

14.2.4 No portion of any invoice submitted by a Contractor that is subject to liquidated damages shall be paid by the City until such time as all liquidated damages relating to that invoice have been paid to the City.

14.2.5 The foregoing liquidated damages provisions shall be expressly set forth, subject to appropriate party name adjustments, as material provisions in all Contracts that the Contractor has with Subcontractors and the Contractor is obligated hereunder to enforce compliance in such Contracts with Subcontractors.

14.2.6 Any payment of liquidated damages hereunder shall not preclude a later claim, nor any later finding of a breach, or any payment of additional damages related to such later claim.

15. Housing and Urban Development Section 3 Clause. In the event this Contract is funded, in whole or in part, through Housing and Urban Development assistance, 24 C.F.R. §135.38 may apply and the Contractor shall then be required to comply with the following (referred to as the "Section 3 clause"):

15.1. The work to be performed under this Contract is subject to the requirements of Section 3 of the Housing and Urban Development Act of 1968, as amended, 12 U.S.C. § 1701u (Section 3). The purpose of Section 3 is to ensure that employment and other

economic opportunities generated by HUD assistance or HUD-assisted Projects covered by Section 3, shall, to the greatest extent feasible, be directed to low and very low-income persons, particularly persons who are recipients of HUD assistance for housing.

15.2. The parties to this Contract agree to comply with HUD's regulations in 24 C.F.R. part 135, which implement Section 3. As evidenced by their execution of this Contract, the parties to this Contract certify that they are under no contractual or other impediment that would prevent them from complying with the part 135 regulations.

15.3. The Contractor agrees to send to each labor organization or representative of workers with which the Contractor has a collective bargaining agreement or other understanding, if any, a notice advising the labor organization or workers' representative of the Contractor's commitments under this Section 3 clause, and will post copies of the notice in conspicuous places at the work site where both employees and applicants for training and employment positions can see the notice. The notice shall describe the Section 3 preference, shall set forth minimum number and job titles subject to hire, availability of apprenticeship and training positions, the qualifications for each; and the name and location of the person(s) taking applications for each of the positions; and the anticipated date the work shall begin.

15.4. The Contractor agrees to include this Section 3 clause in every subcontract subject to compliance with regulations in 24 C.F.R. part 135, and agrees to take appropriate action, as provided in an applicable provision of the subcontract or in this Section 3 clause, upon a finding that the subcontractor is in violation of the regulations in 24 C.F.R. part 135. The Contractor will not subcontract with any subcontractor where the contractor has notice or knowledge that the subcontractor has been found in violation of the regulations in 24 C.F.R. part 135.

15.5. The Contractor will certify that any vacant employment positions, including training positions, that are filled **(i)** after the Contractor is selected but before the Contract is executed, and **(ii)** with persons other than those to whom the regulations of 24 C.F.R. part 135 require employment opportunities to be directed, were not filled to circumvent the Contractor's obligations under 24 C.F.R. part 135.

15.6. Noncompliance with HUD's regulations in 24 C.F.R. part 135 may result in sanctions, termination of this contract for default, and debarment or suspension from future HUD assisted contracts.

15.7. With respect to work performed in connection with Section 3 covered Indian housing assistance, section 7(b) of the Indian Self-Determination and Education Assistance Act (25 U.S.C. § 450e) also applies to the work to be performed under this Contract. Section 7(b) requires that to the greatest extent feasible **(i)** preference and opportunities for training and employment shall be given to Indians, and **(ii)** preference

in the award of contracts and subcontracts shall be given to Indian organizations and Indian-owned Economic Enterprises. Parties to this Contract that are subject to the provisions of Section 3 and section 7(b) agree to comply with Section 3 to the maximum extent feasible, but not in derogation of compliance with section 7(b).

16. Termination.

16.1. Termination of Contract for Cause. If, through any cause, the Contractor shall fail to fulfill in a timely and proper manner its obligations under this Contract, or if the Contractor shall violate any of the covenants, agreements, or stipulations of this Contract, the City shall thereupon have the right to terminate this Contract by either **(i)** giving written notice to the Contractor of a date certain by which Contractor shall, to the written satisfaction of the City, cure after which and without further action by any party, such termination shall automatically become effective and binding, or **(ii)** giving written notice to the Contractor specifying the effective date of such termination at least five (5) business days before the effective date of such termination.

16.1.1 In the event of a termination, all finished or unfinished documents, data, studies, reports, plans, specifications, drawings, supplies, services, etc. prepared by the Contractor under this Contract shall, at the option of the City, become the City's property, and the Contractor shall be entitled to receive just and equitable compensation for any satisfactory work completed for such.

16.1.2 Notwithstanding the above, the Contractor shall not be relieved of liability to the City for damages sustained by the City by virtue of any breach of this Contract by the Contractor, and the City may withhold any payments to the Contractor for the purpose of setoff until such time as the exact amount of damages due the City from the Contractor is determined.

16.2. Termination for Convenience of the City. The City may terminate this Contract at any time for the convenience of the City, by a notice in writing from the City to the Contractor. If this Contract is terminated by the City as provided herein, the Contractor will be paid an amount which bears the same ratio to the total compensation as the services actually performed bear to the total services of the Contractor covered by this Contract, less payments of compensation previously made.

16.3. Termination for Non-Appropriation or Lack of Funding. The Contractor acknowledges that the City is a municipal corporation and that this Contract is subject to the appropriation and disbursement of funds by the City sufficient for this Contract for each budget year in which this Contract is in effect. The Contractor therefore agrees that the City shall have the right to terminate this Contract in whole or in part without penalty to the City in the event that sufficient funds to provide for City payment(s) under this Contract is not appropriated, not authorized, or not made available, or such funding has been reduced. In the event this Contract is subject, in whole or in part, to

the appropriation and disbursement of Federal and/or State funds and those Federal and/or State funds are not appropriated or are not disbursed to the City, the Contractor hereby agrees that the City shall have the right to terminate this Contract in whole or in part without penalty to the City.

16.3.1 Effects of Non-Appropriation. If funds to enable the City to effect continued payment under this Contract are not appropriated, authorized or otherwise made available by law, the City shall have the right to terminate this Contract without penalty at the end of the last period for which funds have been appropriated, authorized or otherwise made available by law by giving written notice of termination to the Contractor.

16.3.2 Effects of Reduced Levels of Funding. If funding is reduced by law, or funds to pay the Contractor for the agreed to level of the products, services and functions to be provided by the Contractor under this Contract are not appropriated, authorized or otherwise made available by law, the City may, upon seven (7) business days written notice to the Contractor, reduce the level of the products, services or functions in such manner and for such periods of time as the City may elect. The charges payable under this Contract shall be equitably adjusted to reflect such reduced level of products, services or functions and the parties shall be afforded the rights set forth in this Contract.

16.3.3 No Payment for Lost Profits. In no event shall the City be obligated to pay or otherwise compensate the Contractor for any lost or expected future profits.

16.4. Rights Upon Termination.

16.4.1 Termination for Cause. In the event the City terminates this Contract for cause, the Contractor shall relinquish to the City any applicable interest, title and ownership including, but not limited to, perpetual use of any proprietary rights in and to the products and deliverables delivered to, in possession of and properly invoiced and paid for by (except to the extent such invoiced amount is disputed) the City. With regard to third party products, the Contractor shall transfer all licenses which it is permitted to transfer in accordance with the applicable third party license. The City shall have no financial obligation to compensate the Contractor for such terminated products unless payment is otherwise approved by the City prior to such termination. The Contractor shall be liable for costs incurred by the City, including but not limited to reasonable attorney fees and all court awarded fees and costs incurred in terminating this Contract in whole or in part.

16.4.2 Termination for Lack of Funding or Convenience. In the event of termination by the City for lack of funding or convenience, the City shall pay

the Contractor for all labor, services, equipment, materials, reports, plans, specifications, drawings, deliverables, incidentals, etc.(including any holdbacks) installed and delivered to the City as of the Termination Date and the Contractor shall relinquish to the City any applicable interest, title and ownership including, but not limited to perpetual use of any proprietary rights in and to said labor, services, equipment, materials, reports, plans, specifications, drawings, deliverables, incidentals, etc. delivered to, in possession of and paid for by the City (except to the extent any invoiced amount is disputed). The Contractor shall be required to exercise commercially reasonable efforts to mitigate damages. In the event of a termination for Lack of Funding or Convenience the City and the Contractor may negotiate a mutually acceptable payment to the Contractor for reasonable demobilization expenses. Said demobilization expenses, if any, shall be handled in accordance with the provision of this Contract pertaining to changes in the Project.

16.4.3 Assumption of Subcontracts. In the event of termination, the City shall have the right to assume, at its option, any and all subcontracts for products, services and functions provided exclusively under this Contract.

16.4.4 Delivery of Documents. In the event of termination, **(i)** the Contractor shall promptly deliver to the City, in a manner reasonably specified by the City, all documents and other tangible items furnished by, or owned, leased, or licensed by, the City, and **(ii)** the City shall pay the Contractor for all services performed and deliverables completed and accepted (pro-rated for deliverables partially completed) prior to the effective date of the termination (except to the extent any invoice amount is disputed).

17. Force Majeure. Contractor shall not be held responsible for delays nor be subject to liquidated damages when such delays are caused by conditions beyond its control, including without limitation:

17.1. Acts of God, fire, explosion, epidemic, cyclone, flood, war, strikes, revolution, civil commotion, or acts of public enemies; and

17.2. Change of law, order, proclamation, regulation, ordinance, or governmental requirement.

Upon cessation of work for reason of force majeure delays, Contractor shall use its best efforts to meet the schedule set forth in Section 5 of this Contract.

18. Subcontracting. The Contractor shall not, without the prior written approval of the City's Using Agency, subcontract, in whole or in part, any of the Contractor's services. Any subcontractor so approved shall be required to secure and maintain insurance coverage equal to or better than that required of the Contractor and shall name the City as an additional insured

party and said subcontractors shall deliver to the City a certificate of insurance evidencing such coverages. All subcontractors shall comply with all federal, state and local, laws, regulations and ordinances but such requirement shall not relieve the Contractor from its requirement that all services provided hereunder shall comply with all Federal, State and local, laws, regulations and ordinances.

18.1. The Contractor shall be as fully responsible to the City for the acts and omissions of its subcontractors, and of persons either directly or indirectly employed by them, as it is for the acts and omissions of persons directly employed by the Contractor.

18.2. The Contractor is responsible for and shall control activities of its subcontractors, and the subcontractors shall consult and cooperate with one another and other contractors working on the Project site. Each subcontractor shall furnish all necessary information to other subcontractors and shall lay out and install its own work so as to avoid any delays or interferences with the work of another. Any cost for changes, cutting and/or repairing, made necessary by failure to observe the above requirements shall be borne by the Contractor or subcontractor responsible for such failure or neglect.

18.3. The Contractor shall not, without the prior written approval of the City's Using Agency, substitute, terminate, replace or otherwise remove a subcontractor.

19. Assignability. The Contractor shall not assign any interest in this Contract, and shall not transfer any interest in the same (whether by assignment or novation) without the prior written approval of the City; provided, however, that claims for money due or to become due the Contractor from the City under this Contract may be assigned to a bank, trust, company, or other financial institution, or to a Trustee in Bankruptcy, without such approval. Notice of any such assignment or transfer shall be furnished promptly to the City.

20. Audit. The City reserves the right to audit the Contractor's books of account in relation to this Contract any time during the period of this Contract or at any time during the twelve month period immediately following the closing or termination of this Contract. In the event the City elects to make such an audit, the Contractor shall immediately make available to the City all records pertaining to this Contract, including, but not limited to, payroll records, bank statements and canceled checks.

21. Interest of City Officials. No member of the governing bodies of the City, and no other officer, employee, or agent of the City who exercises any functions or responsibilities in connection with the carrying out of the Project to which this Contract pertains, shall have any personal interest, direct or indirect, in this Contract.

22. Interest of Contractor. The Contractor covenants that it presently has no interest and shall not acquire any interest, direct or indirect, in the Project or any parcel of land therein or any other interest which would conflict in any manner or degree with the performance of its

services hereunder. The Contractor further covenants that in the performance of this Contract no person having any such interest shall be employed.

23. Entire Contract. This Contract shall constitute the complete and exclusive statement of the contract between the parties as it relates to this transaction and supersedes all previous agreements and understandings, whether written or oral, relating to such subject matter. Any amendment to this Contract must be in writing and agreed to and executed by the City and the Contractor, and must comply with the City's Charter and Code of Ordinances.

24. Independent Contractor Relationship. The relationship between the City and the Contractor is that of client and independent contractor. No agent, employee, or servant of the Contractor shall be deemed to be an employee, agent or servant of the City. The Contractor shall be solely and entirely responsible for its acts and the acts of its agents, employees, servants and subcontractors during the performance of this Contract.

25. Severability. Whenever possible, each provision of this Contract shall be interpreted in such a manner as to be effective and valid under applicable law. If any provision of this Contract, however, is held to be prohibited or invalid under applicable law, such provision shall be deemed restated to reflect the original intentions of the parties, as nearly as possible in accordance with applicable law, and if capable of substantial performance, the remaining provisions of this Contract shall be enforced as if this Contract was entered into without an invalid provision. If the ruling and/or controlling principle of law or equity leading to the ruling is subsequently overruled, modified or amended by legislation, judicial or administrative action, then the provision(s) in question as originally set forth in this Contract shall be deemed valid and enforceable to the maximum extent permitted by the new controlling principal of law or equity.

26. Survival. Any provisions of this Contract that impose continuing obligations on the parties shall survive the expiration or termination of this Contract for any reason.

27. Changes in the Project: Change Orders.

27.1. Requests for Change Orders. The City reserves the right on its own volition, or based upon a proposal for a Change Order submitted in written form with a thorough explanation by the Contractor, to request from time to time any changes to the requirements and specifications of this Contract and the products to be provided and the functions and services to be performed by the Contractor under this Contract. Such changes must be authorized by the City. The City will not approve of any change orders, deletions, additions, or additional work items to the Scope of Services or any change in the terms and conditions of this Contract except by means of a City authorized amended Scope of Services, applicable and restricted to those items set forth in §1, above, or Change Order issued as set forth in this section, except in the event of an emergency endangering life or property.

27.2. Procedures.

27.2.1 The Contractor's Response to a Change Request.

i. Within thirty (30) calendar days after receipt of a request by the City for any such change or such other period of time as the Parties may mutually agree to in writing, the Contractor shall submit to the City a proposal describing any changes in Contract Milestones or Contract completion dates, products, functions, timing of delivery, assignment of personnel, and the like, and any associated price adjustment. The Contractor's proposal shall describe, in detail, the basis for the proposed price adjustment, including the charges for any products required to implement the change request.

ii. To the extent that additional cost or cost savings result from a change in required products, the Contractor shall obtain any additional products and provide them to the City at a negotiated price acceptable to the City and the Contractor. Similarly, if the change request is expected to result in a reduction in products required to perform the services, the Contractor's charges shall be reduced by the cost savings resulting from the products eliminated by the change request**.**

27.2.2 City's Acceptance of Change Request. If the City accepts the Contractor's proposal, the City shall issue a change order referencing the Contractor's proposal and both parties shall sign the change order. The Contractor shall not implement any change request until the City has issued a valid, properly executed, change order.

27.2.3 City's Rejection of Change Request. If the City does not accept the Contractor's proposal, the City may within two weeks of such non-acceptance: **(i)** withdraw its change request; or, **(ii)** modify its change request, in which case the procedures set forth above shall apply to the Contractor's response to the modified change request.

27.3. City Discretion. The City may, in its sole discretion, approve the proposed Change Order and shall forward same for additional signatures under the following conditions: **(i)** If it conforms to provisions of applicable laws, and **(ii)** if it is consistent with this Contract, and **(iii)** if the time of performance of this Contract will not be unreasonably delayed, **(iv)** the Final Completion date is not changed, **(v)** if the Change Order requires a change to the Final Completion date, such change has been authorized by an approved, executed, written Amendment to this Contract, and **(vii)** if the Change Order requires an increase in the price of the Contract, the City **(1)** has sufficient funds, and **(2)** if a budget transfer is required to cover the cost of the proposed Change Order,

such transfer has secured the written approval of the Board of Aldermen and other required regulatory agencies.

27.4. Change Orders Governed by the Provisions of this Contract. All work performed under a Change Order is governed by the provisions of this Contract.

28. Conflicts or Disputes. This Contract represents the concurrence between the City and the Contractor and governs all disputes between them. In the instance of a conflict or dispute over issues not specifically referenced within the Contract, the following documents shall be used as historical documents, without regard to the order of precedence, to resolve such conflicts or disputes, as follows: **(i)** the City's **RFP Number 8897** and **(ii)** the Contractor's response to **RFP Number 8897**. Said historical documents are attached hereto as part of **Attachment A.**

28.1. Procedure. This procedure supersedes all statements to the contrary occurring either in proposals or other prior agreements, oral or written, and all other communications between the parties relating to this subject.

28.2. Presumption. This Contract or any section thereof shall not be construed against any party due to the fact that the Contract or any section thereof was drafted by such party.

29. Disputes; Legal Proceedings; Waiver of Trial by Jury and Continued Performance. The Contractor agrees that its waives a trial by jury as to any and all claims, causes of action or disputes arising out of this Contract or services to be provided pursuant to this Contract. Notwithstanding any such claim, dispute or legal action, the Contractor shall continue to perform services under this Contract in a timely manner, unless otherwise directed by the City.

30. Binding Contract. The City and the Contractor each bind themselves, and their successors, assigns and legal representatives to the other party to this Contract and to the successors, assigns and legal representatives of such other party with respect to all covenants of this Contract.

31. Waiver. Any waiver of the terms and conditions of this Contract by either of the parties hereto shall not be construed to be a waiver of any other term or condition of this Contract.

32. Governing Laws. This Contract, its terms and conditions and any claims arising there from shall be governed by the laws of the State of Connecticut.

33. Notice. Except as otherwise specifically prohibited in this Contract, whenever under this Contract approvals, authorizations, determinations, notices, satisfactions or waivers are required or permitted, such items shall be effective and valid only when given in writing

signed by a duly authorized officer of the City or the Contractor, and delivered in hand or sent by mail, postage prepaid, to the party to whom it is directed, which until changed by written notice, are as follows:

Contractor: ZC Utility Services LLC d/b/a Carner Bros.
10 Steel Ct
Roseland, NJ 07068-1236

City: Superintendent
City of Waterbury
Water Department
21 East Aurora Street
Waterbury, CT 06708

With copy to: Corporation Counsel
City of Waterbury
235 Grand Street, 3rd Floor
Waterbury, CT 06702

34. City Code of Ordinances, Ethics and Conflict of Interest Code, Provisions.
The Person (the term "Person" shall herein be as defined in Section 38 of the City's Code of Ordinances) supplying the labor, services, equipment, materials, reports, plans, specifications, drawings, deliverables, incidentals, etc. under this Contract shall comply with all applicable Federal, State and Municipal statutes, regulations, charters, ordinances, rules, etc, whether or not they are expressly stated in this Contract, including but not limited to the following:

34.1. It shall be a material breach of this Contract, and, except as may be permitted by regulations or rulings of the City of Waterbury Board of Ethics it shall be a violation of the City's Code of Ordinances, for any Public Official, City Employee or Member of a Board or Commission who is participating directly or indirectly in the procurement process as set forth in the City's Code of Ordinances, including those participating in exempt transactions, to become or be the employee of any person contracting with the governmental body by whom the Official, Employee, or Board or Commission member is employed or is a member.

34.2. It shall be a material breach of this Contract, and it shall be a violation of the City's Code of Ordinances for any Person to offer, give, or agree to give any current or former Public Official, Employee or Member of a Board or Commission, or for such current or former Public Official, Employee or Member of a Board or Commission to solicit, demand, accept or agree to accept from another Person, a gratuity or an offer of employment in connection with any: decision; approval; disapproval; recommendation; preparation of any part of a program requirement or a requisition; influencing the content of any specification or procurement standard; or rendering of advice, investigation, auditing, or in any other advisory capacity in any proceeding or

application, request for ruling, determination, claim or controversy, or other particular matter, pertaining to any program requirement or a Contract or Purchase Order, or to any solicitation or proposal therefore.

34.3. It shall be a material breach of this Contract and it shall be a violation of the City's Code of Ordinances for any payment, Gratuity, or offer of employment to be made as an inducement for the award of a subcontract or order, by or on behalf of a subcontractor, the prime Contractor or higher tier subcontractor or any Person associated therewith, under a Contract or Purchase Order to the City.

34.4. The value of anything transferred or received in violation of the City's Charter, Code of Ordinances, and/or regulations promulgated there under, by any Person subject to said Charter and/or Ordinances may be recovered by the City.

34.5. Upon a showing that a subcontractor made a kickback to the City, a prime Contractor or a higher tier subcontractor in connection with the award of a subcontract or order there under, it shall be conclusively presumed that the amount thereof was included in the price of the subcontract or order and ultimately borne by the City and will be recoverable hereunder from the recipient. In addition, said value may also be recovered from the subcontractor making such kickbacks. Recovery from one offending party shall not preclude recovery from other offending parties.

34.6. It shall be a material breach of this Contract and it shall be a violation of the City's Code of Ordinances for a Person to be retained, or to retain a Person, to solicit or secure a contract with the City upon an agreement or understanding for a commission, percentage, brokerage, or contingent fee; and every Person, before being awarded a City Contract, shall deliver to the City, on a City authored form, a representation that such Person has not retained anyone in violation of this subsection 34.6, the failure to deliver said form being a material breach of this Contract and a violation of the City's Code of Ordinances. Note, however, this subsection 34.6 shall not apply to full-time Employees who, as a condition of their employment, may be entitled to bonuses or other fees in accordance with their employment relationship.

34.7. The Person hereby expressly represents that he/she/it has complied with those sections of the City's Code of Ordinances requiring that said Person has **(i)** delivered to the City an affidavit, on a City authored form, stating that the Person and its affiliates have no delinquent taxes or other financial obligations owned to the City; **(ii)** filed the City authored financial disclosure statement form as set forth in the City's Code of Ordinances regarding disclosure of financial interests; **(iii)** delivered to the City a written acknowledgement, on a City authored form, evidencing receipt of a copy of the "Ethics and Conflict of Interest" ordinance for the City of Waterbury and hereby expressly represents that said Person is in full compliance with the entirety of said Code of Ordinances; and **(iv)** filed a current list of all taxable personal and real property as required by the State of Connecticut General Statutes. Any violation of this

subsection 34.7 shall be deemed a material breach of this Contract and shall be a violation of the City's Code of Ordinances.

34.8. The definitions set forth in the City's Code of Ordinances shall be the primary source for interpretation of the forgoing subsections 34.1-34.7.

34.9. The Contractor is hereby charged with the requirement that it shall have knowledge of, and shall fully comply with, all relevant provisions of the City's Charter and all relevant provisions of the City's Code of Ordinances, including without limitation Chapters 93, titled "Discriminatory Practices", Chapter 38 titled "Centralized Procurement System", and Chapter 39 titled "Ethics and Conflict of Interest", of said Code as may be amended from time to time.

34.10 The Contractor hereby acknowledges receipt of a copy of the Chapters 38 and 39 of City's Ordinance regarding Procurement, Ethics, and Conflicts of Interest and has familiarized itself with said Code and hereby agrees to adhere to said Code. The text of Chapters 38 and 39 of said Code may be obtained from the Office of the City Clerk of the City and on the internet at the City Clerk's web site: *http://www.waterburyct.org/content/458/539/default.aspx* [click link titled "The City of Waterbury Code of Ordinances *Passed 8/24/2009*". For Chapter 38, click on "TITLE III: ADMINISTRATION", then click on "CHAPTER 38: CENTRALIZED PROCUREMENT SYSTEM". For Chapter 39, click on "TITLE III: ADMINISTRATION", then click on "CHAPTER 39: ETHICS AND CONFLICTS OF INTEREST"].

34.11. The Contractor is hereby charged with the requirement that it shall have knowledge of, and shall fully comply with, the City's Ordinance Sections 34.15 through 34.99 entitled, "Ordinance Concerning the Hiring of Waterbury Residents on Certain Publicly-Funded Construction Projects," and the State of Connecticut Legislature's Special Act No. 01-1.

34.12. Every Person who conducts business with, contracts, with or provides commodities or services to the City, is charged with notice of the extent of the powers and authority, and the limitations thereon, of the Public Officials and Employees of the City, as set forth in the charter of the City, the Code of Ordinances and any Regulations or Policies pertaining thereto. In particular, and without implying any limitation as to its applicability, it applies to all Persons who participate in the procedures pertaining to the Centralized Procurement System as set forth in Chapter 38, and the Ethics and Conflict of Interest provisions set forth in Chapter 39 of the Code of Ordinances.

34.13. INTEREST OF CITY OFFICIALS. No member of the governing body of the City, and no other officer, employee, or agent of the City who exercises any functions or responsibilities in connection with the carrying out of the project, to which

this agreement pertains, shall have any personal interest, direct or indirect, in this agreement.

34.14. PROHIBITION AGAINST CONTINGENCY FEES. The Contractor hereby represents that it has not retained anyone to solicit or secure a contract with the City upon an agreement or understanding for a commission, percentage, brokerage or contingency fee.

34.15. FREEDOM OF INFORMATION ACT NOTICE. Pursuant to State statute, in the event the total compensation payable to the Contractor set forth in Section 6 of this Contract is greater than $2,500,000.00, the City is entitled to receive a copy of any and all Contractor records and files related to the performance of this Contract and those records and files are subject to the Freedom of Information Act ("the Act") and may be disclosed by the City pursuant to the Act.

35. Definitions. Whenever the following, words, terms, etc. appear in this Contract, the intent and meaning shall be as follows:

35.1 Additional Work: Work required by the City that involves a substantial addition to, deduction from or modification of the Contract Documents.

35.2 Bid or Proposal: The form on which the bidder is to submit a bid or Proposal for the Work contemplated.

35.3 Bidder: A person, partnership, corporation or other business organization submitting a bid on the form for the Work contemplated.

35.4 City: The City of Waterbury, acting directly or through specifically authorized personnel.

35.5 Construction Supervisor: An employee of the City of Waterbury, or other City duly authorized person.

35.6 Contract Time: The number of days as stated in the Contract to: (i) achieve Substantial Completion, (ii) Final Completion, and (iii) any other identified Project Milestone.

35.7 Equal: The recognized equivalent in substance and function; considering quality, workmanship, economy of operation, durability and suitability for purposes intended, and not constituting a change in the Work specified. Whenever the words "equal" or "equals" or words of like import are used, it shall be understood they mean "equal" in the opinion of the City.

35.8 Final Completion: The time at which the Project has progressed to the point where, in the opinion of the City, the Project is complete such that it is ready for final payment as evidenced by the City's, or its duly authorized City representative's, written recommendation of final payment. The terms "finally complete" and "finally completed" as applied to the Project refer to Final Completion.

35.9 General Conditions and/or Special Conditions: An extension to the terms, conditions, and provisions set forth in this document as additional, material, provisions of this Contract

35.10 Notice to Proceed: A letter from the City which shall state the date of execution of the Contract and specifically advise the Contractor to begin work on the Contract.

35.11 Plans: All drawings or reproductions of drawings pertaining to the construction of the work contemplated and its appurtenances.

35.12 Project Engineer or Manager: An employee of the City or a person, partnership, corporation or other business organization under contract with the City, commissioned to perform construction administration and inspection duties during construction.

35.13 Shop Drawings: Drawings, diagrams, schedules, performance charts, brochures and other materials prepared by the Contractor or subcontractors, manufacturers or distributors which illustrate some portion of the work.

35.14 Specifications or Technical Specifications: The description, provisions and other requirements pertaining to the materials, methods and manner of performing the Project.

35.15 Subcontractor: A person, partnership, corporation or other business organization supplying labor and/or materials for work at the site of the Project to and under agreement with the Contractor.

35.16 Substantial Completion: The time at which, in the opinion of the Engineer, the Project (or a specified part thereof) is sufficiently complete, in accordance with the Contract Documents, so that the Project (or a specified part thereof) can be utilized for the purposes for which it is intended. The terms "substantially complete" and "substantially completed" as applied to all or part of the Project mean Substantial Completion thereof.

35.17 Substitution: A replacement of specified material, device or equipment which is sufficiently different in substance, function, quality or workmanship to become the subject of a Change Order.

35.18 Work: All plant, labor, materials, services, supplies, equipment and other facilities and items necessary for, or incidental to, the completion of the terms of the Contract.

35.19 Using Agency: **City of Waterbury Water Department or other Using Agency as may be identified in any fully executed Task Order**.

[Signature page follows]

IN WITNESS WHEREOF, the parties hereto execute this Contract on the dates signed below.

WITNESSES:

Sign:_____
Print name:

Sign:_____
Print name:

CITY OF WATERBURY

By:_____
Paul K. Pernerewski Jr., Mayor

Date: _____

WITNESSES:

Sign:_____
Print name:

Sign:_____
Print name:

ZC Utility Services LLC d/b/a Carner Bros.

By:_____
Print name:

Its _____

Date: _____

ATTACHMENT A

Attachment A shall consist of the following, which are attached hereto, are acknowledged by the Contractor as having been received, or otherwise hereby incorporated by reference as noted below, and all are made a part hereof:

1.1.1 **RFP Number 8897** (acknowledged by the Contractor as having been received);

1.1.2 Contractor's Proposal submitted in response to **RFP Number 8897**, consisting of 42 pages, Contractor's 3 page Cost Schedule, dated August 19, 2026 (signed August 20, 2026), and 1 page letter from Contractor dated August 27, 2026 (all attached hereto);

1.1.3 Annual Statement of Financial Interests; Disclosure and Affidavit Re: Outstanding Obligations to the City; Debarment Certification; Corporate Resolution, Non-Collusive Affidavit (incorporated by reference);

1.1.4 Certificates of Insurance (attached hereto);

1.1.5 Performance Bond and Payment Bond (incorporated by reference);

1.1.6 Special Conditions Article 1 – Article 11 consisting of 7 pages (attached hereto)

1.1.7 General Conditions Article 1 – Article 111 consisting of 34 pages (attached hereto);

1.1.8 Any and all amendment(s) and Change Orders issued by the City after execution of Contract (incorporated by reference);

1.1.9 All applicable Federal, State and local statutes, regulations, charter and ordinances (incorporated by reference), and

1.1.10 All permits (including, but not limited to, City of Waterbury Building permit(s)) and licenses (incorporated by reference).

"The Underground Specialists"

STATEMENT OF QUALIFICATIONS

Prepared For:

The City of Waterbury

Bureau of Water

Contract No. 8897

On-Call Insertion Valve Contractor

Submitted By:

Carner Bros.

Table of Contents

Company Information 1

Why Carner Bros. 2

Key Personnel 3

Company Overview 4

Leadership & Continuity

References 5

References Continued 6

Company Philosophy Statement 7

Business Focus 8

Service Area

Our Workforce

Safety & Quality Commitment 9

Our Commitment

Core Values

RESUMES

Zachary Zartman - Supervisor 10

Matthew Zartman - Specialty Utility Technician / Excavation Foreman 11

Chris "Chip" Bauch - Supervisor 12

William "Billy" Hall - Senior Specialty Utility Technician 13

Thomas Pravata - Specialty Utility Technician 14

Darin Keepers - Specialty Utility Technician 15

Nick Maher - Utility Construction Technician 16

Dylan Mooney - Specialty Utility Technician 17

Appendices

BID DOCUMENTS & ATTACHMENTS

Attachment A Documents

Attachment C Documents

Attachment D Documents

Attachment E Documents

Bid Bond

Submitted in a separate sealed envelope, as requested.

Submitted as "Confidential: Price Proposal"

Company Information

Company Name	Carner Bros.
Business Address	10 Steel Ct., Roseland, N.J. 07068
Main Office	(973) 226-1840
Administrative Email	admin@carnerbros.com
Website	www.carnerbros.com
Established	1950
Family Ownership Since	Since 1987
Current Generation Leadership Since	2015
Business Type	Family-Owned & Operated
Business Certification	New Jersey Certified Small Business Enterprise (SBE)
Primary Service Area	New Jersey, New York, Pennsylvania, New England, and throughout the Northeastern United States
Emergency Response	Available 24/7 – 365 Days a year
Experienced Field Personnel	Approximately 12 Employees
Primary Services	Insertion Valve Installations, Line Stopping, Live Water Main Work, Underground Utility Construction, Excavation
Primary Clients	Municipalities, Water Authorities, Utility Contractors, Consulting Engineers, Industrial & Private Utility Owners

Company Philosophy:

"Do the Job Right the First Time."

Carner Bros. has built its reputation by maintaining an intentionally experienced workforce, providing direct leadership involvement on every project, and delivering dependable underground utility construction with safety, integrity, and quality workmanship at the forefront of everything we do.

Why Carner Bros.

- ✔ Established in 1950
- ✔ Family-Owned & Operated
- ✔ Family Ownership Since 1987
- ✔ Third Generation Leadership
- ✔ New Jersey Certified Small Business Enterprise (SBE)
- ✔ Approximately 12 Highly Experienced Field Employees
- ✔ Emergency Response Capabilities
- ✔ Specialized Underground Utility Contractor
- ✔ Daily Toolbox Talks & Job Hazard Analyses
- ✔ Serving the Northeast and Beyond

"Our reputation has never been built on being the largest contractor—it has been built on providing experienced personnel, specialized expertise, and dependable service on every project."

Key Personnel

Todd Zartman

President
tzartman@carnerbros.com
Cell: 973-277-6704

Chris Bauch

Supervisor
cbauch@carnerbros.com
Cell: 860-462-5029

Zachary Zartman

Supervisor
zach@carnerbros.com
Cell: 973-445-3945

Matthew Zartman

Supervisor
mzartman@carnerbros.com
Cell: 973-897-2076

Company Overview

Founded in 1950, Carner Bros. has established a long-standing reputation as a trusted provider of specialized underground utility construction. Since our family's acquisition of the company in 1987—following years of working alongside the company's founders—we have remained committed to carrying forward the reputation they established while continually adapting to meet the evolving needs of the underground utility industry.

Today, Carner Bros. continues under the leadership of the second and third generations of our family. Following the transition of ownership in 2015, our family has remained actively involved in every aspect of the company's operation, preserving the values that have defined Carner Bros. for decades while continuing to invest in the future of the business.

Operating under our long-standing slogan, "The Underground Specialists," Carner Bros. provides specialized underground utility construction services throughout the Northeast. We proudly serve municipalities, water authorities, utility contractors, consulting engineers, industrial facilities, and private utility owners who depend on experienced professionals to safely complete critical infrastructure projects.

Leadership & Continuity

One of the greatest strengths of Carner Bros. is the continuity of its leadership. As a family-owned and operated business, the individuals responsible for leading the company remain directly involved in its daily operations. Rather than managing projects from multiple layers of administration, company leadership is actively engaged in estimating, project planning, client communication, scheduling, field operations, and overall project execution.

This hands-on approach allows us to remain responsive, accountable, and personally invested in every project we undertake. Our clients work directly with the individuals responsible for planning the work and ensuring it is completed safely, efficiently, and to the standards that have defined Carner Bros. for generations.

This continuity of ownership and leadership allows us to preserve the values that built our reputation while continually adapting to meet the evolving needs of today's underground utility industry.

References

- Parsippany Water Department:
  Sean Andres
  973-263-7099

- Denville Water & Sewer:
  John Egbert
  973-224-1316

- Pompton Lakes MUA:
  Eli Sweeney
  862-812-3147

- Araz Industries:
  Graz Zara
  917-417-9362

- Colonnelli Bros.:
  Lukas Prokop
  347-479-7015

- Scafar Contracting:
  Dan Kresge
  973-919-2492

- Aquarion Water:
  Carlos Vizcarrondo
  203-395-3097

- The City of Albany Water Department:
  Kurt Carman
  518-275-5871

- Suffolk County Water Authority:
  Chris Given
  631-774-0203

References Continued

Similar Contracts

- Parsippany Water Department
- Suffolk County Water Authority
- Denville Sewer & Water
- Village of Ridgewood Water
- Rockaway Borough Water Department
- Town of Dover N.J. Water Department

Non-contract Emergency Services of a Similar Nature

- Colonnelli Bros.
- First District Water
- Aquarion Water
- Araz Industries
- Scafar Contracting
- Pompton Lakes MUA
- Burns Construction
- The City of Albany Water Department
- Essex Fells Water Department
- Township of Bloomfield Water & Sewer
- Borough of Caldwell Water & Sewer
- The Village of Johnson City Water Department
- John Garcia Construction
- Montana Construction
- Keller Bros.
- Sparwick Contracting
- Frank Semeraro Construction Co.
- Rutgers University

Company Philosophy Statement

Since its founding in 1950, Carner Bros. has built its reputation on a simple principle: **do the job right the first time.** When our family assumed ownership of the company in 1987 after years of working alongside its founders, we accepted not only the responsibility of continuing the business, but also the responsibility of carrying forward the reputation that had already been established. Today, that same commitment continues through the second and third generations of our family.

As a family-owned and operated company, we understand that our reputation is our most valuable asset. Every project reflects not only the Carner Bros. name, but also the trust that has been earned through decades of dependable service. We believe lasting relationships are built through honest communication, dependable service, and consistently delivering quality workmanship—not simply by being the lowest bidder.

Operating under our long-standing slogan, **"The Underground Specialists,"** we have intentionally remained a highly specialized company rather than pursuing growth for growth's sake. We have never measured success by the number of employees or the volume of projects completed. Instead, we measure success by the quality of our work, the experience of our people, and the trust we earn from our clients.

By maintaining a deliberately experienced workforce, we are able to provide direct oversight, invest in continuous training, and ensure every member of our field team possesses the knowledge, experience, and professionalism required to perform critical underground utility work safely and efficiently. Our clients can expect experienced personnel who have helped build our reputation to be directly involved in every project, providing the consistency, accountability, and workmanship that have become synonymous with the Carner Bros. name.

Safety is the cornerstone of every operation we perform. Through daily toolbox talks, Job Hazard Analyses (JHAs), detailed planning, and a culture where every employee is responsible for protecting one another, we are committed to completing every project without compromising the safety of our employees, our clients, or the communities we serve.

Reliability is equally important to our philosophy. Whether responding to an emergency water system failure or completing a planned infrastructure improvement, our clients depend on us to provide knowledgeable personnel, specialized equipment, sound decision-making, and dependable execution. We recognize the critical nature of the infrastructure we work on and understand that our work directly impacts the reliability of essential public services.

While our work has taken us throughout the Northeast and beyond, our philosophy has never changed: perform quality work safely, treat people honestly, stand behind every project, and earn our customers' trust through our actions. More than seventy-five years after the company's founding, these principles continue to define Carner Bros. and guide everything we do.

Business Focus

Carner Bros. specializes in underground utility construction with a primary focus on critical water distribution infrastructure. Our experience allows us to safely perform complex work that requires specialized knowledge, planning, equipment, and highly trained personnel.

Our services include, but are not limited to:

- Insertion Valve Installations
- Line Stopping
- Pipe freezing
- Water & Sewer Main Repairs
- Excavation
- Emergency Utility Response
- Planned Municipal Infrastructure Improvements

Whether responding to emergency failures or performing scheduled infrastructure improvements, we understand that our work directly affects essential public services. Every project is approached with careful planning, open communication, and a commitment to minimizing service interruptions while delivering dependable results.

Service Area

Headquartered in New Jersey with a satellite shop and office in Connecticut, Carner Bros. routinely performs work throughout the Northeast including but not limited to - New Jersey, New York, Pennsylvania, and all of New England while remaining prepared to mobilize wherever else our specialized services are needed.

Our experience has taken us throughout the Northeast and beyond, allowing us to support municipalities, utilities, and contractors wherever dependable underground utility specialists are required.

Our Workforce

One of Carner Bros.' greatest competitive advantages is our intentionally focused workforce.

Rather than measuring success by the size of our company, we have chosen to maintain a highly specialized team of experienced professionals. This allows us to provide direct oversight, maintain consistent quality, and invest in the training and development of every member of our field team.

We believe specialized underground utility work demands specialized personnel—not simply available manpower. Every employee is entrusted with critical underground utility work because they have demonstrated the knowledge, experience, professionalism, and commitment necessary to perform it safely and efficiently.

By intentionally maintaining an experienced workforce, our clients can expect consistency from project to project. Experienced personnel who have helped build our reputation remain directly involved in the work, providing the quality, accountability, and dependable execution our customers have come to expect.

Safety & Quality Commitment

Safety, preparation, and professionalism are fundamental to every project we undertake.

Through daily toolbox talks, comprehensive Job Hazard Analyses (JHAs), ongoing training, detailed project planning, and a culture of accountability, we strive to ensure every project is completed safely while protecting our employees, our clients, and the public.

Quality extends beyond the finished product. We believe that proper planning, experienced personnel, specialized equipment, and clear communication are essential components of every successful project. Our objective is not simply to complete the work, but to complete it safely, efficiently, and correctly
the first time.

Our Commitment

For more than seventy-five years, Carner Bros. has earned the trust of municipalities, water authorities, engineers, contractors, and utility owners by providing dependable service and quality workmanship
on some of the region's most critical underground infrastructure projects.

Whether responding to an emergency water main failure, performing a specialized insertion valve installation or line stop, or completing a planned municipal infrastructure improvement, our objective remains the same: to provide our clients with experienced personnel, specialized expertise, responsive service, and dependable results.

As we look toward the future, we remain committed to carrying forward the reputation established by those before us while continuing to serve our clients with the integrity, professionalism, and dedication that have defined Carner Bros. since 1950.

Core Values

Every decision we make and every project we undertake is guided by the principles that have defined our company for generations:

- Safety
- Integrity
- Quality Workmanship
- Accountability
- Reliability
- Professionalism
- Continuous Training
- Honest Communication
- Customer Commitment
- Doing the Job Right the First Time

Zachary Zartman- Resume

Supervisor

Zach Zartman has 15 years of experience in underground utility construction with Carner Bros., specializing in insertion valve installations, line stopping, wet tapping, and emergency utility response. He has progressed from laborer to lead installer and foreman, demonstrating a strong commitment to safety, quality, and customer service.

Since 2013, Zach has served as the lead installer and foreman for Carner Bros.' specialty services division. He is actively involved in field operations while overseeing crew supervision, safety compliance, project coordination, equipment readiness, and employee training.

PROFESSIONAL EXPERIENCE

2013 - Present — **Lead Installer / Foreman - Specialty Services Division**
Carner Bros.

- Lead installer and foreman for insertion valve installations, line stopping, wet tapping, and emergency response projects.
- Oversees crew supervision, safety compliance, project coordination, equipment readiness, and employee training.
- Provides hands-on technical leadership for specialty live water main operations.

2011 - 2013 — **Utility Technician - Pipe Crew**
Carner Bros.

- Gained hands-on experience in underground utility construction, excavation, water main work, and field operations.
- Began specialized training in insertion valve installations, line stopping, and wet tapping.
- Obtained CDL

TRAINING AND CERTIFICATIONS

- OSHA 10
- OSHA 30
- Confined Space
- TEAM in-house & field installation training certifications
- HYDRA-STOP classroom & field training certifications
- Mueller (insertion valve) classroom & field training
- CDL

AT A GLANCE

15 years in underground construction/with Carner Bros.

Areas of expertise:

- General pipework
- General excavation
- Water & waste-water main repair
- Line stopping
- Insertion valve installations
- Wet / hot tapping
- Emergency utility response
- Crew supervision

PROPOSED ROLE ON THIS CONTRACT

Zach will serve as the Lead Specialty Installer and Foreman for specialty operations performed under this contract.

His responsibilities will include planning and overseeing insertion valve installations, line stopping operations, wet tapping, and other specialized live water main work while ensuring projects are completed safely, efficiently, and in accordance with project specifications.

In addition to remaining actively involved in field operations, Zach will provide day-to-day crew supervision, equipment coordination, quality control, employee training, Job Hazard Analysis (JHA) development, safety oversight, and communication with project owners, inspectors, and utility representatives.

As the lead foreman for Carner Bros.? specialty services division since 2013, Zach will be responsible for ensuring every project reflects the quality, professionalism, and dependable service that have become synonymous with the Carner Bros. name.

Matt Zartman- Resume

Specialty Utility Technician/Excavation Foreman

Matthew Zartman has been a member of the Carner Bros. team since 2016, beginning through the Morris County Vocational School District Work-Based Learning Program before joining the company full-time upon graduation in 2017.

As part of the third generation of family leadership at Carner Bros., Matthew has built his career through hands-on field experience. Rather than entering the business in a management role, he began working alongside experienced field personnel, gaining firsthand experience in underground utility construction, excavation, and municipal water infrastructure.

Matthew has developed extensive experience in underground utility construction, excavation, water main installation and repair, insertion valve installations, line stopping operations, emergency utility response, welding, and heavy equipment operation. He continues to support both the excavation and specialty utility divisions on municipal water infrastructure projects throughout the Northeast.

PROFESSIONAL EXPERIENCE

2016 - Present — **Specialty Utility Technician / Excavation Foreman Carner Bros.**

- Underground utility construction, excavation operations, and heavy equipment operation.
- Water main installation and repairs, water service installations, and emergency utility response.
- Supports insertion valve installations and line stopping operations.
- Provides crew support, project coordination, and safety compliance.

Education & Technical Training

Morris County Vocational School District
Construction Trades Program | 2015 - 2017

- Graduate of the Construction Trades Program.
- Earned AWS Welding Certification.
- Participated in the Work-Based Learning Program with Carner Bros.

AT A GLANCE

9 years in underground utility construction with Carner Bros.

Areas of Expertise:

- Underground utility construction
- Excavation
- Water main installation
- Water main repairs
- Water service installation
- Insertion valve installations
- Line stopping
- Heavy equipment operation
- Emergency utility response
- Welding & fabrication
- Crew Support

PROPOSED ROLE ON THIS CONTRACT

Specialty Utility Technician Matthew will serve as a Specialty Utility Technician, supporting excavation activities, water main construction, insertion valve installations, line stopping operations, emergency utility response, and related underground utility work.

His experience in both excavation and specialty utility operations, combined with his AWS welding certification, provides additional versatility and technical capability to Carner Bros.' field operations.

Matthew's hands-on experience with underground utility construction, heavy equipment operation, welding, and municipal water infrastructure will support the safe, efficient, and successful completion of work performed under this contract.

TRAINING & CERTIFICATIONS

- OSHA 10
- OSHA 30
- Confined Space
- CDL

Chris "Chip" Bauch- Resume

Supervisor

Chip has more than 20 years of experience performing specialized live water main maintenance and underground utility construction. Throughout his career, he has developed extensive expertise in wet tapping, line stopping, insertion valves, pipe freezing, and emergency water system repairs for municipalities, water authorities, utility contractors, and industrial facilities.

Prior to joining Carner Bros., Chip spent more than 20 years with Jack Farrelly Company, serving as a Lead Service Technician from 2005 through 2015 before being promoted to Service Manager from 2015 through 2025. During that time, he supervised field operations, coordinated specialty utility projects, trained field personnel, and performed complex live water main work throughout the Northeast.

In 2026, Chip joined Carner Bros. as a Supervisor, where he provides leadership, technical expertise, crew supervision, and field support on specialty underground utility projects. His extensive knowledge of multiple manufacturers' equipment and procedures makes him a valuable resource for both planned municipal infrastructure improvements and emergency response operations.

PROFESSIONAL EXPERIENCE

Carner Bros. - *Supervisor*
January 2026 - Present

Responsibilities Include:

- Supervises specialty underground utility crews
- Oversees insertion valve, line stop, and wet tap operations
- Provides technical support and field leadership
- Assists with emergency response projects
- Ensures quality, safety, and efficient project execution

Jack Farrelly Company- *Supervisor*
2015-2025

Jack Farrelly Company- *Lead Service Technician*
2005-2015

SPECIALIZED EXPERIENCE

- **WET/HOT TAPPING** 12" -36" All pipe materials Up to 250 PSI
- **INSERTION VALVES** 3"-24" All pipe materials Up to 250 PSI
- **LINE STOPPING** 12"-66" All pipe materials Up to 250 PSI
- **PIPE FREEZING** /2" -12" Carbon Dioxide (CO2) Liquid Nitrogen

AREAS OF EXPERTISE

20+ Years of Specialized Live Water Main & Underground Utility Experience

- Wet Tapping
- Line Stopping
- Insertion Valve Installations
- Pipe Freezing
- Live Water Main Construction
- Emergency Utility Response
- Crew Supervision
- Project Coordination
- Underground Utility Construction
- Municipal Water Infrastructure

MANUFACTURER EXPERIENCE

- Hydra-Stop 4"-24"
- TEAM 3" -12"
- AVT 4" - 12"
- Mueller 4" - 12"

PROPOSED ROLE ON THIS CONTRACT

FIELD SUPERVISOR

Chip will serve as a Field Supervisor, providing technical leadership, project oversight, and field support for insertion valve installations, line stopping operations, pipe freezing, wet tapping, and other specialized underground utility work performed under this contract.

Responsibilities will include project planning, crew supervision, equipment selection, quality assurance, employee mentoring, and field problem-solving.

His extensive experience with multiple insertion valve and line stop systems, combined with his background managing specialty service operations, provides valuable technical expertise for both planned municipal infrastructure improvements and emergency response activities.

William "Billy" Hall- Resume

Senior Specialty Utility Technician

William "Billy" Hall has more than 18 years of experience in underground utility construction and specialized live water main maintenance. His expertise includes insertion valve installations, line stopping, wet tapping, pipe freezing, testing, project coordination, and emergency utility response. Since joining Carner Bros. in 2026, Billy has applied his extensive field and supervisory experience to specialty utility projects throughout the Northeast.

PROFESSIONAL EXPERIENCE

Carner Bros. - *Senior Specialty Utility Technician*
January 2026 - Present

Responsibilities Include:

- Insertion Valve Installations
- Wet Tapping
- Line Stopping
- Pressure Testing
- Emergency Utility Response
- Specialty Utility Construction
- Technical Field Support

Corriea Excavators, Inc.- *Underground Utility Construction / Project Support*
July 2020- December 2025

Responsibilities Include:

- Underground utility installation
- Water main inspections, testing, and chlorination
- Water main taps
- Sewer main inspections and testing
- Material estimating
- Project take-offs
- Daily project billing
- As-built documentation
- Vendor coordination
- Heavy equipment and Class B dump truck operation
- Job-site material coordination

Jack Farrelly Company – *Assistant Service Manager*
February 2008–July 2020

Responsibilities Include:

- Customer service and project coordination
- Service scheduling
- Contract review
- Project estimating
- Equipment maintenance
- Technical field support
- Water and sewer main repairs
- Supervision of specialty service operations

Developed extensive experience performing:

- Wet Tapping I
- nsertion Valve Installations
- Line Stopping (Bullet & Folding Head)
- Pipe Freezing
- Water System Testing
- Specialty Underground Utility Construction

AREAS OF EXPERTISE

18+ years in underground utility construction with Carner Bros.

- Sewer Main Inspection
- Project Estimating
- Project Scheduling
- Contract Review
- Material Coordination
- As-Built Documentation
- Emergency Utility Response
- Insertion Valve Installations
- Wet Tapping
- Line Stopping
- Pipe Freezing
- Water Main Testing
- Underground Utility Construction
- Water Main Inspection & Chlorination

LICENSES & TECHNICAL QUALIFICATIONS

- Connecticut Class B Commercial Driver License (Air Brakes)
- Connecticut P-6 Underground Plumbing License
- Microsoft Office Applications
- Project Documentation & Data Management
- Customer Relations
- Project Coordination

PROPOSED ROLE ON THIS CONTRACT

Senior Specialty Utility Technician

Safety Compliance Quality Control Emergency Response Billy will serve as a Senior Specialty Utility Technician, providing technical field support for insertion valve installations, line stopping operations, wet tapping, pipe freezing, testing, and related underground utility work. Drawing upon more than eighteen years of specialized experience, he will assist with project planning, quality assurance, technical problem-solving, field coordination, and emergency response activities while supporting the successful execution of specialty utility projects under this contract.

Thomas Pravata- Resume

Specialty Utility Technician

Tommy has more than six years of experience in municipal water utility operations and underground utility construction. His background includes hands-on experience with water distribution system maintenance, emergency water main repairs, service line replacements, hydrant maintenance, sewer system operations, and specialty underground utility work.

Prior to joining Carner Bros., Tommy worked for both the Fairfield Department of Public Works and the West Caldwell Water Department, where he gained valuable experience maintaining and operating municipal water and wastewater infrastructure. His experience working directly for public utilities provides a unique understanding of municipal operations, regulatory requirements, and customer service expectations.

At Carner Bros., Tommy applies that experience to specialty underground utility construction, supporting insertion valve installations, line stopping operations, emergency response projects, and planned municipal infrastructure improvements throughout the Northeast.

PROFESSIONAL EXPERIENCE

Carner Bros. - *Specialty Utility Technician*
***2024* - Present**

Key Responsibilities:

- Supports insertion valve installations
- Underground utility construction
- Assists with line stopping operations
- Crew support and equipment operation
- Emergency response utility work
- Municipal infrastructure improvements

West Caldwell Water Department - *Water Department Technician*
2020-*2024*

Responsible for the operation, maintenance, and repair of municipal water and wastewater infrastructure, including:

- Water sampling and regulatory compliance
- Service line repairs and replacements
- State reporting
- Lead gooseneck removal projects
- Water main repairs
- Pipe freezing operations
- Water system flushing
- Mark-outs
- Pressure regulator maintenance
- Heavy equipment and machine operation
- Hydrant repair and replacement
- Sewer pump station and lift station operation, maintenance, and repairs

AREAS OF EXPERTISE

6+ Years of Specialized Live Water Main & Underground Utility Experience

- Municipal Water Distribution Systems
- Water Main Repairs
- Insertion Valve Installations
- Line Stopping
- Pipe Freezing
- Hydrant Repair & Replacement
- Service Line Repairs & Replacements
- Lead Service Replacement
- Water Sampling & Regulatory Compliance
- Sewer Pump & Lift Station Operations
- Equipment Operation
- Emergency Utility Response

CORE RESPONSIBILITIES

- Specialty Utility Construction
- Crew Support
- Equipment Operation
- Safety Compliance
- Municipal Infrastructure Maintenance
- Emergency Response Operations
- Quality Workmanship

PROPOSED ROLE ON THIS CONTRACT

Specialty Utility Technician

Tommy will serve as a Specialty Utility Technician, supporting insertion valve installations, line stopping operations, emergency response activities, and related underground utility construction. His previous municipal water department experience provides valuable insight into utility system operations and the importance of maintaining reliable service for water authority customers

Darin Keepers- Resume

Specialty Utility Technician

Darin has experience in commercial facility maintenance, plumbing systems, mechanical equipment repair, and underground utility construction. His background in maintaining critical building infrastructure, combined with his experience at Carner Bros., provides a strong foundation for performing specialized underground utility work safely, efficient

PROFESSIONAL EXPERIENCE

Carner Bros. - *Specialty Utility Technician*
***2024* - Present**

Responsibilities Include:

- Supports insertion valve installations
- Assists with line stopping operations
- Underground utility construction
- Emergency utility response
- Equipment operation and project support
- Municipal water infrastructure

Montclair Golf Club - *Building Maintenance Technician*
June 2022 - November 2024

Responsible for the maintenance, repair, and operation of commercial building systems and infrastructure, including:

- General plumbing maintenance and repair
- Plumbing fixture installation and repairs, including sinks, toilets, circulating pumps, and associated piping
- Sewer backup response and drain cleaning
- Commercial swimming pool and pump system maintenance and repair
- HVAC preventative maintenance
- Belt, motor, and filter replacement
- PVC drainage system repairs within commercial kitchen facilities
- General building maintenance and mechanical trouble shooting

AREAS OF EXPERTISE

- Mechanical Systems Maintenance
- Commercial Plumbing Systems
- Pump Systems
- Drain Cleaning & Sewer Maintenance
- PVC Piping Repairs
- Equipment Operation
- Underground Utility Construction
- Insertion Valve Installations
- Line Stopping
- Emergency Utility

CORE RESPONSIBILITIES

- Specialty Utility Construction
- Equipment Operation
- Crew Support
- Safety Compliance
- Mechanical Troubleshooting
- Project Support
- Quality Workmanship

PROPOSED ROLE ON THIS CONTRACT

Specialty Utility Technician

Darin will serve as a Specialty Utility Technician, supporting insertion valve installations, line stopping operations, emergency utility response, and related underground utility construction. His background in mechanical systems, plumbing maintenance, pump systems, and infrastructure repair complements his field experience and contributes to the safe and efficient completion of specialized water utility projects.

Nick Maher- Resume

Utility Construction Technician

Nick has more than five years of experience in utility construction, with extensive hands-on experience in water and wastewater main installation and repair, excavation, water service installations, and support for insertion valve and line stopping operations.

Before joining Carner Bros., Nick gained valuable experience with PSE&G and the Borough of Ringwood Department of Public Works, where he developed strong skills in underground utility construction, gas distribution systems, and municipal infrastructure maintenance.

At Carner Bros., Nick supports utility construction projects throughout the Northeast, including water and wastewater main work, service installations, excavation, and emergency utility response.

PROFESSIONAL EXPERIENCE

Carner Bros. - *Specialty Utility Technician*
***2025* - Present**

Responsibilities Include:

- Supports water and wastewater main installation and repair
- Assists with water service installations
- Supports insertion valve and line stopping operations
- Performs excavation and underground utility construction
- Responds to emergency utility repair work
- Supports municipal infrastructure improvement projects

PSE&G - *Utility Mechanic Apprentice*
2024 - 2025

Responsibilities Include:

- Assisted with gas distribution system installation and maintenance
- Supported gas main and service work
- Performed excavation and backfilling
- Used hand and power tools in the installation and repair of underground utilities
- Followed safety protocols and utility procedures

Borough of Ringwood Department of Public Works- *Laborer*
2020 - 2024

Responsibilities Include:

- Assisted with water main installation and repair
- Assisted with wastewater main installation and repair
- Installed water services and performed service repairs
- Performed excavation, trenching, and backfilling
- Maintained roads, drainage systems, and municipal property
- Operated and maintained hand and power tools
- Supported snow removal and seasonal maintenance operations
- Responded to emergency water and sewer repairs

AREAS OF EXPERTISE

5+ Years of Experience in Utility Construction

- Water Main Installation and Repair
- Wastewater Main Installation and Repair
- Water Service Installations Excavation and Trenching
- Insertion Valve and Line Stopping Support
- Emergency Utility Response
- Underground Utility Construction
- Gas Distribution Systems Municipal Infrastructure Maintenance Equipment Operation
- Public Works Support

LICENSES & CERTIFICATIONS

- OSHA 10-Hour Construction Safety
- Confined Space Entry Training

PROPOSED ROLE ON THIS CONTRACT

Utility Construction Technician

Nick will serve as a Utility Construction Technician, supporting water and wastewater main installation and repair, water service installations, excavation, insertion valve and line stopping operations, and emergency utility response.

His experience with municipal public works, PSE&G, and private utility construction provides a strong foundation in underground utility construction and infrastructure maintenance.

Nick's hands-on experience, work ethic, and commitment to safety and teamwork will be valuable assets in completing the work required under this contract.

Dylan Mooney- Resume

Specialty Utility Technician

Dylan Mooney has nearly three years of hands-on experience in municipal water utility operations and infrastructure maintenance with the Township of West Caldwell Water Department. His background includes water distribution system maintenance, emergency water main repairs, service line work, hydrant and valve maintenance, system flushing, equipment operation, and other day-to-day responsibilities associated with maintaining a municipal water system.

Dylan joined Carner Bros. in July 2026, bringing with him current, firsthand experience working directly for a municipal water utility. His understanding of municipal water system operations provides a valuable perspective as he continues developing his experience in insertion valve installations, line stopping, wet tapping, and other specialized underground utility services.

PROFESSIONAL EXPERIENCE

Carner Bros. - *Specialty Utility Technician*
***2026* - Present**

Since joining Carner Bros., Dylan has begun applying his municipal water utility experience to the company's specialty underground utility operations, including:

- Insertion valve installation support
- Line stopping support
- Wet tapping support
- Water main construction and repair
- Underground utility construction
- Equipment and crew support
- Emergency utility response
- Jobsite safety and preparation

West Caldwell Water Department – *Water Department Technician*
2023-2026

Performed day-to-day operation, maintenance, and repair of municipal water and related infrastructure, including:

- Water main repairs
- Water service line repairs and replacements
- Water sampling
- Regulatory and state reporting
- Water system flushing
- Hydrant repair and replacement
- Line valve repair and replacement
- Pressure regulator maintenance
- Pipe freezing • Lead gooseneck removal
- Utility mark-outs • Equipment and machine operation
- Sewer pump and lift station operation, maintenance, and repair
- Emergency water system response

AREAS OF EXPERTISE

3+ Years of Experience in Utility Construction

- Municipal Water Distribution Systems
- Water Main Repair
- Water Service Installation & Repair
- Hydrant Maintenance & Replacement
- Valve Maintenance & Replacement
- Water System Flushing
- Pipe Freezing
- Equipment Operation
- Utility Mark-Outs
- Water Sampling
- Municipal Utility Operations
- Underground Utility Construction

LICENSES & CERTIFICATIONS

- OSHA 10-Hour Construction Safety
- OSHA 30-Hour Construction Safety

PROPOSED ROLE ON THIS CONTRACT

Specialty Utility Technician

Dylan will serve as a Specialty Utility Technician, supporting insertion valve installations, line stopping operations, wet tapping, equipment setup, water main work, and related underground utility activities performed under this contract. His recent experience working directly for a municipal water department provides him with a practical understanding of water distribution system operations, maintenance requirements, emergency response, and the importance of maintaining reliable service during construction activities.

REPRESENTATIVE EXPERIENCE

Municipal water distribution system operation and maintenance, water main repairs, service line installation and repair, hydrant and valve maintenance, pipe freezing, equipment operation, emergency water system response, and specialty underground utility construction.

Attachment A Documents

- ANNUAL STATEMENT OF FINANCIAL INTEREST
- DEBARMENT CERTIFICATION
- CITY OF WATERBURY DISCLOSURE OF OUTSTANDING OBLIGATIONS

FILL IN AND RETURN WITH YOUR SUBMISSION

CITY OF WATERBURY
ANNUAL STATEMENT OF FINANCIAL INTERESTS (Calendar Year 202__)
Persons or Entities Conducting Business with the City

I. Outstanding Purchase Orders of Contracts with the City

A. Contracts

No Contracts with the City [X]

Type text here

(Service or Commodity Covered by Contract)

(Term of Contract)

(Service or Commodity Covered by Contract)

(Term of Contract)

(Service or Commodity Covered by Contract)

(Term of Contract)

FILL IN AND RETURN WITH YOUR SUBMISSION

CITY OF WATERBURY
ANNUAL STATEMENT OF FINANCIAL INTERESTS (Calendar Year 202__)
Persons or Entities Conducting Business with the City

B. Purchase Order(s).

No Purchase Order(s) with the City [X]

(Service or Commodity Covered by Purchase Order)

(Date of Purchase Order)

(Service or Commodity Covered by Purchase Order)

(Date of Purchase Order)

(Service or Commodity Covered by Purchase Order)

(Date of Purchase Order)

FILL IN AND RETURN WITH YOUR SUBMISSION

CITY OF WATERBURY
ANNUAL STATEMENT OF FINANCIAL INTERESTS (Calendar Year 202__)
Persons or Entities Conducting Business with the City

II. Financial Interest Disclosure

(Public Officials, Employees or Board and Commission Members with interest in Person or Entity Conducting Business with the City)

No Officials, Employees or Board and Commission Members with Financial Interest [X]

(Name of Official)

(Position with City)

(Nature of Business Interest)
(e.g. Owner, Director etc...)

Interest Held By:
Self ☐ Spouse ☐ Joint ☐ Child ☐

(Name of Official)

(Position with City)

(Nature of Business Interest)
(e.g. Owner, Director etc...)

Interest Held By:
Self ☐ Spouse ☐ Joint ☐ Child ☐

FILL IN AND RETURN WITH YOUR SUBMISSION

1. I certify that this Annual Statement of Financial Interests is a complete and accurate statement of those matter required to be disclosed by me pursuant to §39.061 of the Code of Ordinances.

2. I understand that if I fail to file an Annual Statement (or amendment thereto) or an inaccurate Statement I will be in violation with Chapter 39 of the Code of Ordinance and, thereby, subject to the remedies set forth in §§38.71 and 39.101 of said Code.

3. I understand that I must file with the City Clerk, within fifteen (15) days following any reportable occurrence, any amendments to the Annual Statement.

I have read and agree to the above certification.

ZC Utility Services LLC dba Carner Bros.
(Name of Company, if applicable)



Signature of Individual (or Authorized Signatory)

August 19, 2026
Date

Todd R. Zartman, President
Print or Type Name and Title (if applicable)

DELIVERED | By Mail ☐ Hand-Delivered ☒

FILL IN AND RETURN WITH YOUR SUBMISSION

City of Waterbury Certification
Regarding
Debarment, Suspension, Ineligibility and Exclusion

If the transaction is Federally funded, in whole or in part (including pass through grants to state and/or municipal government), this certification is required by the regulations implementing one or more Presidential Executive Orders. If this transaction is funded by the State of Connecticut, in whole or in part, this certification is required in accordance with one or more State of Connecticut general statutes.

1. By signing and submitting the attached proposal and/or this document, the prospective lower tier participant, vendor, or contractor is providing the certification set out below.
2. The certification in this clause is a material representation of fact upon which reliance was placed when this transaction was entered into. If it is later determined that the prospective lower tier participant, vendor, or contractor knowingly rendered an erroneous certification, in addition to other remedies available to the Federal , State, or City government, the department or agency with which this transaction originated may pursue available remedies, including suspension and/or debarment.
3. The prospective lower tier participant, vendor or contractor shall provide immediate written notice to the person to which the attached proposal and/or this document is submitted if at any time the prospective lower tier participant, vendor or contractor learns that its certification was erroneous when submitted or has become erroneous by reason of changed circumstances.
4. The terms "covered transaction", "debarred", "suspended", "ineligible", "lower tier covered transaction", "participant", "person", "primary covered transaction", "principal", "proposal", and "voluntarily excluded", as used herein, have the meanings set out in the Definitions and Coverage sections of rules implementing Executive Order 12549 and/or State of Connecticut statutes and regulations. You may contact the person to which this proposal and/or this document is submitted for assistance in obtaining a copy of the foregoing.
5. The prospective lower tier participant, vendor or contractor agrees by submitting the attached proposal and/or this document that, should the proposed covered transaction be entered into, it shall not knowingly enter into any covered transaction with a person who is debarred, suspended, declared ineligible, or voluntarily excluded from participation in this covered transaction unless authorized by the department or agency with which this transaction originated.
6. The prospective lower tier participant, vendor or contractor further agrees by submitting the attached proposal and/or this document that it will include the clause titled "Certification Regarding Debarment, Suspension, Ineligibility, and Voluntary Exclusion-Lower Tier Covered Transactions", without modification, in all covered transaction and in all solicitations for covered transactions.
7. A participant in a covered transaction may rely upon the certification of a prospective participant in a covered transaction that it is not debarred, suspended, ineligible, or voluntarily excluded from the covered transaction, unless it knows that the certification is erroneous. A participant may decide the method and frequency by which it determines the eligibility of its principals. Each participant may but is not required to, check the Non-procurement List.
8. Nothing contained in the foregoing shall be construed to require establishment of a system of records in order to render in good faith the certification required herein. The knowledge and information of a participant is not required to exceed that which is normally possessed by a prudent person in the ordinary course of business dealings.
9. Except for transactions authorized under paragraph 5 herein, if a participant in a covered transaction knowingly enters into a lower tier covered transaction with a person who is suspended, debarred, ineligible, or voluntarily excluded from participation in this transaction, in addition to other remedies available to the Federal, State or Municipal government, the department or agency with which this transaction originated may pursue available remedies, including suspension and/or debarment.

Certification

(1) The prospective recipient of monies hereby certifies, by submission of its attached proposal and/or by execution of this document, that neither it nor its principles are presently debarred, suspended, proposed for debarment, declared ineligible, disqualified, or voluntarily excluded from bidding or participation in the proposed transaction by any Federal, State, or Municipal department or agency or by the statutes, regulations or ordinances of the foregoing departments and agencies.

(2) Where the prospective recipient of monies is unable to certify to any of the statements in this certification, such prospective participant shall attach a written explanation hereto.

Full Legal Name and address of Recipient, Vendor, or Contractor: ZC Utility Services LLC dba Carner Bros.

10 Steel Ct., Roseland, NJ 07068

Print Name and Title of Authorized Representative: Todd R. Zartman, President

Signature of Authorized Representative:

Date: August 19, 2026

4.

FILL IN AND RETURN WITH YOUR SUBMISSION

CITY OF WATERBURY
DISCLOSURE AND CERTIFICATION AFFIDAVIT REGARDING OUTSTANDING OBLIGATIONS TO THE CITY OF WATERBURY

For the purposes of this Disclosure of Outstanding Financial Obligations, the following definitions apply:

(a) "Contract" means any Public Contract as defined below.

(b) "Person" means one (1) or more individuals, partnerships, corporations, associations, or joint ventures.

(c) "Public Contract" means any agreement or formal commitment entered into by the city to expend funds in return for work, labor, services, supplies, equipment, materials or any combination of the foregoing, or any lease, lease by way of concession, concession agreement, permit, or per agreement whereby the city leases, grants or demises property belonging to the city, or otherwise grants a right of privilege to occupy or to use said property of the city.

(d) "City" means any official agency, board, authority, department office, or other subdivision of the City of Waterbury.

State of New Jersey

SS.:_____

County of Essex

Todd R. Zartman, being first duly sworn, deposes and says that:

1. I am the ***owner, partner, officer, representative, agent or*** President of ZC Utility Services LLC dba Carner Bros. (Contractor's Name), the Contractor that has submitted the attached agreement.

2. I am fully informed respecting the preparation and contents of the attached Agreement and of all pertinent circumstances respecting such Agreement;

3. That as a person desiring to contract with the City (check all that apply):

____ The Contractor and each owner, partner, officer, representative, agent or affiliate of the Contractor has filed a list of taxable personal property with the City of Waterbury for the most recent grand list, as required by Conn. Gen. Stat. §12-42.

X___ Neither the Contractor nor any owner, partner, officer, representative, agent or affiliate of the Contractor are required to file a list of taxable personal property with the City of Waterbury for the most recent grand list, as required by Conn. Gen. Stat. §12-42.

X___ Neither the Contractor nor any owner, partner, officer, representative, agent or affiliate of the Contractor either directly or through a lease agreement, owes back taxes to the City of Waterbury

FILL IN AND RETURN WITH YOUR SUBMISSION

CITY OF WATERBURY
DISCLOSURE AND CERTIFICATION AFFIDAVIT REGARDING OUTSTANDING OBLIGATIONS TO THE CITY OF WATERBURY

X Neither the Contractor nor any owner, partner, officer, representative, agent or affiliate of the Contractor either directly or through a lease agreement, has any other outstanding obligations to the City of Waterbury

4. The following list is a list of the names of all persons affiliated with the business of the Contractor, if none state none. Use additional sheet if necessary (Must be on company letterhead and notarized):

Name	Title	Affiliated Company (if none state NONE)	Service or Material	DOB
1 Todd R. Zartman	President			01/15/1967
2 Kevin W. Corb	Vice President			04/18/1970
3				
4				

5. That as a person desiring to contract with the City:

(a) The Contractor or an owner, partner, officer, representative, agent or affiliate of the Contractor provides, or has provided, services or materials to the City within one (1) year prior to the date of this disclosure, if none, state none. Use additional sheet if necessary (Must be on company letterhead and notarized):

Name	Title	Affiliated Company (if none state NONE)	Service or Material	DOB
1		NONE		
2				
3				
4				

(b) The Contractor possesses an ownership interest in the following business organizations, if none, state none. Use additional sheet if necessary (Must be on company letterhead and notarized) :

Organization Name	Address	Type of Ownership
1 NONE		
2		
3		
4		

(c) The following persons possess an ownership interest in the Contractor. If the Contractor is a corporation, list all of the officers of the corporation and the names of each stockholder whose shares exceed twenty-five

FILL IN AND RETURN WITH YOUR SUBMISSION

CITY OF WATERBURY
DISCLOSURE AND CERTIFICATION AFFIDAVIT REGARDING OUTSTANDING OBLIGATIONS TO THE CITY OF WATERBURY

(25) percent of the outstanding stock, if none, state none. Use additional sheet if necessary (Must be on company letterhead and notarized):

	Name	Title	DOB	Stock %
1	NONE			
2				
3				
4				

(d) Of the following of the affiliates, individuals or business entities identified in this affidavit, list each that owns, owned, or within one (1) year prior to the date of this disclosure has owned, taxable property situated in the City of Waterbury, if none state none. Use additional sheet if necessary (Must be on company letterhead and notarized):

	Name	Title	Affiliated Company (if none state NONE)	Address	DOB
1	NONE				
2					
3					
4					

(e) If the Contractor conducts business under a trade name, the following additional information is required: the place where such entity is incorporated or is registered to conduct such business; and the address of its principal place of business, if none, state none:

	TRADE NAME	PLACE OF INCORPORATION/REGISTRY	PRINCIPAL PLACE OF BUSINESS
1	Carner Bros.	New Jersey	Roseland, NJ & Tolland, CT
2			
3			
4			

I hereby certify that the statements set forth above are true and complete, and I understand that any incorrect information or omission of information from this affidavit may result in the immediate termination of the Contractor's agreement with the City of Waterbury.

For Partnership/Sole Proprietor

In presence of:

Witness

Name of Partnership/Business

FILL IN AND RETURN WITH YOUR SUBMISSION

CITY OF WATERBURY
DISCLOSURE AND CERTIFICATION AFFIDAVIT REGARDING OUTSTANDING OBLIGATIONS TO THE CITY OF WATERBURY

By: Todd R. Zartman
Name of General Partner/ Sole Proprietor

10 Steel Ct., Roseland, NJ 07068
Address of Business

State of New Jersey)

) SS

County of Essex)

Todd R. Zartman being duly sworn,

Deposes and says that he/she is President of ZC Utility Services LLC and that he/she answers to the foregoing questions and all statements therein are true and correct.

Subscribed and sworn to before me this 20th day of August 2026

Patricia M. Zartman
(Notary Public)

My Commission Expires: 03/09/2031 #50153641

For Corporation

Witness

Name of Corporate Signatory

Address of Business

Affix
Corporate
Seal

By:
Name of Authorized Corporate Officer

Its:
Title

FILL IN AND RETURN WITH YOUR SUBMISSION

CITY OF WATERBURY
DISCLOSURE AND CERTIFICATION AFFIDAVIT REGARDING OUTSTANDING OBLIGATIONS TO THE CITY OF WATERBURY

State of New Jersey)

) SS

County of Essex)

Todd R. Zartman being duly sworn,

deposes and says that he/she is President of ZC Utility Services LLC and that he/she answers to the foregoing questions and all statements therein are true and correct.

Subscribed and sworn to before me this 20th day of August 2024.

Patricia M Zartman
#50153641 (Notary Public)

My Commission Expires: 03/04/2031

Attachment C Document

- ADDENDUM/CERTIFICATION/NOTICE OF ACCEPTANCE and NON-COLLUSION STATEMENT

FILL IN AND RETURN WITH YOUR SUBMISSION

ATTACHMENT C

KEVIN MC CAFFERY
DIRECTOR OF PURCHASING
235 GRAND STREET, ROOM 103
WATERBURY, CT 06702

The undersigned declares that the only persons or parties interested in this Proposal as principals are as stated; that the Proposal is made without any collusion with other persons, firms, or corporations; that Proposer has carefully examined the entire Request for Proposal; that Proposer has informed itself fully in regard to all conditions pertaining to the Work and the place where it is to be performed; and that with this representation, the undersigned makes this Proposal. These prices shall cover all expenses incurred in performing the Work required under the Contract Documents, of which this Proposal and Form are a part.

The undersigned agrees and covenants that the Contract Time shall commence on delivery of the City of Waterbury's written notice to proceed, which shall occur after contract execution by both parties.

The undersigned acknowledges receipt of addenda numbered: (insert date)

1 _____ 4 _____

2 _____ 5 _____

3 _____ 6 _____

All Work for this Project shall be performed at the Proposal Prices as described in the Proposal Documents.

The undersigned hereby certifies under the penalties of perjury that this Proposal is in all respects bona fide, fair and made without collusion or fraud with any other person. As used in this section, the work "person" shall mean any natural person, joint venture, partnership, corporation, or other business or legal entity.

47-2047519
Social Security Number
or Federal Identification Number

Signature of Individual or Corporate Name

Corporate Officer
(if applicable)

City notice of acceptance should be mailed, telegraphed or delivered to the undersigned Proposer at the following address:

Name Todd R. Zartman
By: President
(Title)
Business Address: 10 Steel Ct., Roseland, NJ 07068
(City, State, Zip Code)

Phone: 973-226-1840
Email: admin@carnerbros.com
Date: August 19, 2026

Note: If the Proposer is a corporation, indicate State of incorporation under signature, and affix corporate seal; if a partnership, give full names and residential addresses, if different from business address.

Attachment D Document

- INSURANCE REQUIREMENTS

CERTIFICATE OF LIABILITY INSURANCE

DATE (MM/DD/YYYY): 07/21/2026

PRODUCER	Fax#	Phone#
J.J. Farber-Lottman Co., Inc. 200 Route 5 / P.O. Box 613 Palisades Park, NJ 07650		

THIS CERTIFICATE IS ISSUED AS A MATTER OF INFORMATION ONLY AND CONFERS NO RIGHTS UPON THE CERTIFICATE HOLDER. THIS CERTIFICATE DOES NOT AMEND, EXTEND OR ALTER THE COVERAGE AFFORDED BY THE POLICIES BELOW.

INSURED	Fax#	Phone#
ZC Utility Services, LLC t/a Carner Brothers P.O. Box 116 Roseland, NJ 07068		

INSURERS AFFORDING COVERAGE	NAIC #
INSURER A: The Travelers Indemnity Company	25666
INSURER B: Travelers Property Cas. Comp. of Am.	25674
INSURER C: The Charter Oak Fire Insurance Comp.	25615
INSURER D: The Travelers Indemnity Comp. of CT	25682
INSURER E: Shelterpoint Life Insurance Co.	

COVERAGES

THE POLICIES OF INSURANCE LISTED BELOW HAVE BEEN ISSUED TO THE INSURED NAMED ABOVE FOR THE POLICY PERIOD INDICATED. NOTWITHSTANDING ANY REQUIREMENT, TERM OR CONDITION OF ANY CONTRACT OR OTHER DOCUMENT WITH RESPECT TO WHICH THIS CERTIFICATE MAY BE ISSUED OR MAY PERTAIN, THE INSURANCE AFFORDED BY THE POLICIES DESCRIBED HEREIN IS SUBJECT TO ALL THE TERMS, EXCLUSIONS AND CONDITIONS OF SUCH POLICIES. AGGREGATE LIMITS SHOWN MAY HAVE BEEN REDUCED BY PAID CLAIMS.

INSR LTR	ADD'L INSRD	TYPE OF INSURANCE	POLICY NUMBER	POLICY EFFECTIVE DATE (MM/DD/YYYY)	POLICY EXPIRATION DATE (MM/DD/YYYY)	LIMITS	
A		GENERAL LIABILITY ✔ COMMERCIAL GENERAL LIABILITY ☐ CLAIMS MADE ✔ OCCUR GEN'L AGGREGATE LIMIT APPLIES PER: ☐ POLICY ✔ PRO-JECT ☐ LOC	DT-CO-4W151504-TIL-26	02/11/26	02/11/27	EACH OCCURRENCE DAMAGE TO RENTED PREMISES (Ea occurence) MED EXP (Any one person) PERSONAL & ADV INJURY GENERAL AGGREGATE PRODUCTS - COMP/OP AGG	$2,000,000 $500,000 $10,000 $2,000,000 $4,000,000 $4,000,000
D		AUTOMOBILE LIABILITY ✔ ANY AUTO ☐ ALL OWNED AUTOS ☐ SCHEDULED AUTOS ✔ HIRED AUTOS ✔ NON-OWNED AUTOS	BA-4W14564A-26-26-G	02/11/26	02/11/27	COMBINED SINGLE LIMIT (Ea accident) BODILY INJURY (Per person) BODILY INJURY (Per accident) PROPERTY DAMAGE (Per accident)	$1,000,000 $ $ $
		GARAGE LIABILITY ☐ ANY AUTO				AUTO ONLY - EA ACCIDENT OTHER THAN AUTO ONLY: EA ACC AGG	$ $ $
B		EXCESS / UMBRELLA LIABILITY ✔ OCCUR ☐ CLAIMS MADE ☐ DEDUCTIBLE ☐ RETENTION $	CUP-4W156155-26-26	02/11/26	02/11/27	EACH OCCURRENCE AGGREGATE	$5,000,000 $5,000,000
C		WORKERS COMPENSATION AND EMPLOYERS' LIABILITY ANY PROPRIETOR/PARTNER/EXECUTIVE OFFICER/MEMBER EXCLUDED? (Mandatory in NH) Y/N: N If yes, describe under SPECIAL PROVISIONS below	UB-4W150187-26-26-G	02/11/26	02/11/27	✔ WC STATU-TORY LIMITS ☐ OTH-ER E.L. EACH ACCIDENT E.L. DISEASE - EA EMPLOYEE E.L. DISEASE - POLICY LIMIT	 $1,000,000 $1,000,000 $1,000,000
A E		OTHER Equipment Floater DISABILITY	DT-CO-4W151504-IND-26 DBL766714	02/11/26 03/18/26	02/11/27 03/17/27	Leased/Rented Equip Equipment LIMITS	$100,000 $410,000 STATUTORY

DESCRIPTION OF OPERATIONS / LOCATIONS / VEHICLES / EXCLUSIONS ADDED BY ENDORSEMENT / SPECIAL PROVISIONS

Additional Insured: The City of Waterbury is named as Additional Insured on a Primary Non-Contributory basis with respect to the work and operations of ZC Utility Services, LLC only,on their behalf as per their written contract requiring the same. Waiver of Subrogation applies. Subject to policy conditions and exclusions.

CERTIFICATE HOLDER	Fax#	Phone#
The City of Waterbury 235 Grand Street Waterbury, CT 06702		

CANCELLATION

SHOULD ANY OF THE ABOVE DESCRIBED POLICIES BE CANCELLED BEFORE THE EXPIRATION DATE THEREOF, THE ISSUING INSURER WILL ENDEAVOR TO MAIL 30 DAYS WRITTEN NOTICE TO THE CERTIFICATE HOLDER NAMED TO THE LEFT, BUT FAILURE TO DO SO SHALL IMPOSE NO OBLIGATION OR LIABILITY OF ANY KIND UPON THE INSURER, ITS AGENTS OR REPRESENTATIVES.

AUTHORIZED REPRESENTATIVE



© 1988-2009 ACORD CORPORATION. All rights reserved.

The ACORD name and logo are registered marks of ACORD

IMPORTANT

If the certificate holder is an ADDITIONAL INSURED, the policy(ies) must be endorsed. A statement on this certificate does not confer rights to the certificate holder in lieu of such endorsement(s).

If SUBROGATION IS WAIVED, subject to the terms and conditions of the policy, certain policies may require an endorsement. A statement on this certificate does not confer rights to the certificate holder in lieu of such endorsement(s).

DISCLAIMER

This Certificate of Insurance does not constitute a contract between the issuing insurer(s), authorized representative or producer, and the certificate holder, nor does it affirmatively or negatively amend, extend or alter the coverage afforded by the policies listed thereon.

Attachment

- SAMPLE BID BOND

City of Waterbury – Water Department

BID BOND

(Required only where Bid submitted has a Total Bid Price of more than $50,000)

KNOW ALL MEN BY THESE PRESENTS THAT WE _____

ZC Utility Services LLC dba Carner Bros (Contractor) of the town of Roseland, NJ as principal and Bondex Insurance Company (Bond Agent) of the town of Florham Park, NJ as Surety ty are held firmly bound unto the City of Waterbury, Connecticut in the penal sum of Ten Percent of the Amount Bid (written amount in dollars) ($ 10% of the Amount Bid) for the payment of which, well and truly made, we hereby jointly and severally bind ourselves, our heirs, executors, administrators, successors and assigns.

Signed this 25th day of August, 2026

The conditions of the above obligation is such that whereas the Principal has submitted to the City of Waterbury, Connecticut a certain Bid, attached hereto and hereby made part hereof to enter into a contract in writing for the

On Call Insertion Valve Contractor

NOW THEREFORE,

(a) If said Bid shall be rejected, or in the alternate.

(b) If said Bid be accepted and the Principal shall execute hereto (properly completed in the accordance with said Bid) and furnish a bond for his faithful performance of said contract, and for the payment of all persons performing labor or furnishing materials in connection therefore and shall in all other respects perform the agreement created by the acceptance of said Bid.

Then this obligation shall be void, otherwise the same shall remain in force and effect: it being expressly understood that and agreed that the liability of the Surety for any and all claims there under shall, in no event, exceed the penal amount of this obligation as herein stated.

The Surety, for value received, hereby stipulates and agrees to that the obligations of said Surety and its bond shall in no way be impaired or affected by the extension of time within which the Owner may accept such Bid; and said Surety does hereby waive notice of such extension.

IN WITNESS WHEREOF, The Principal and Surety have hereunto set their hands and seals and such of them as corporations have caused their corporate seal to be affixed and these presents be signed by their proper officers, the day and year first set forth above.

ZC Utility Services LLC dba Carner Bros Principal By _____

Bondex Insurance Company Surety By _____
Jaclyn Murphy, Attorney-in-Fact

Note: This is a sample of a Bid Bond acceptable to the City. Another form may be utilized provided it is acceptable to the City of Waterbury

Consent of Surety

Bondex Insurance Company, a corporation created and existing under the laws of the State of **New Jersey,** maintaining an office in **Florham Park, NJ,** duly authorized to transact business in the State of **Connecticut** (hereinafter, the "Surety") does hereby consent and agree with the bid of **ZC Utility Services LLC dba Carner Bros** (hereinafter, the "Principal"), as principal, for **RFP #8848 - The City of Waterbury Bureau of Water, On-Call Insertion Valve Contractor** (hereafter the "Contract") be accepted and the Contract shall be properly and lawfully awarded to the Principal in the amount not to exceed the Principal's bid, the Surety shall execute and deliver to the Principal a bond(s) for the faithful performance of the Contract in such form as may set forth in, and as required by, the bid specifications, solicitation or advertisement (hereinafter, the "Bid Documents").

This Consent of Surety shall remain in force and effect for so long as the Bid Documents provide for acceptance of the Principal's bid or execution of the Contract. If no such period is set forth in the Bid Documents, for 90 days after bid opening, or as otherwise may be required by statue or regulation, whichever period is longer, unless the Principal and the Surety shall agree in writing to a longer period.

This Consent of Surety has been signed, sealed and dated on **August 25, 2026**

ATTEST:

Bondex Insurance Company

Claudia Pereira, Witness

Jaclyn Murphy, Attorney In fact

SF-vs 1.0.0

ACKNOWLEDGEMENT OF PRINCIPAL, IF A CORPORATION

STATE OF _____) ss:
COUNTY _____)

On the _____day of _____ in the year 20____,
Before me personally came_____ to me known, who, being by me duly sworn, did depose and say that (s) he resides at
_____, that (s) he is the
_____ of
_____, the corporation described in and which executed the above instrument; and that (s) he signed her/his name thereto by order of the Board of Directors of said corporation.

My commission expires: _____ _____
Notary Public

ACKNOWLEDGEMENT OF PRINCIPAL, IF A PARTNERSHIP

STATE OF New Jersey) ss:
COUNTY OF Essex)

On the 20th day of August in the year 2026,
Before me personally came Todd R. Zartman to me known and known to me to be a member of the firm ZC Utility Services, LLC dba Carner Bros, described in and who executed the foregoing instrument; and (s) he duly acknowledged to me that (s) he executed the same for and in behalf of said firm for the uses and purpose mentioned therein.

My commission expires: 03/04/2031 Patricia M Zartman
Notary Public

PATRICIA M. ZARTMAN
Notary Public, State of New Jersey
Comm. # 50153641
My Commission Expires 03/04/2031

ACKNOWLEDGEMENT OF PRINCIPAL, IF AN INDIVIDUAL

STATE OF _____) ss:
COUNTY OF _____)

On the _____ day of _____ in the year 20 ____,
Before me personally came _____ to me known and known to me to be the person described in and who executed the foregoing instrument and (s) he duly acknowledged that (s) he executed the same.

My commission expires: _____ _____
Notary Public

ACKNOWLEDGEMENT OF SURETY

State of New Jersey -
]-ss.
County of Morris -

On **August 25, 2026** before me personally came **Jaclyn Murphy** to me known, who, being by me duly sworn, did depose and say that he is an **Attorney-in-Fact** of **Bondex Insurance Company** the corporation described in and which executed the within instrument; that he knows the corporate seal, and that he signed that the said instrument and affixed the said seal as Attorney-in-Fact by authority of the Board of Directors of said corporation and by authority of this office under the Standing Resolutions thereof.

LOREEN APONTE
Notary Public, State of New Jersey
Comm. # 50226496
My Commission Expires 10/01/2029

My commission expires: _____

_____
Notary Public

POWER OF ATTORNEY

Bondex Insurance Company

Bond Number **BID BOND**

KNOW ALL MEN BY THESE PRESENTS: That **Bondex Insurance Company**, a corporation duly organized under the laws of the State of New Jersey, and having its principal office in Atlanta, County of Cobb, State of Georgia, does hereby appoint:

Philip S. Tobey, Lionel D. Jorge, Jeffrey R. Bauman, Claudia Pereira, Brenda Turiello, Jaclyn Murphy, Loreen Aponte, Destiny Perez

its true and lawful Attorney(s)-in Fact, with full power and authority to execute on its behalf bonds, undertakings, including but not limited to, consents of surety, bid bonds, performance bonds, payments bonds, maintenance bonds, lien discharge bonds, and renewals of any of the foregoing, recognizances, and other contracts of indemnity and writings obligatory in nature thereof, issued in the course of its business and to bind the Company in an amount not to exceed Fifteen Million and 00/100 Dollars ($15,000,000.00).

This Power of Attorney is granted and is signed and sealed by the authority of the following Resolution adopted by the Board of Directors of Bondex Insurance Company at a meeting duly called and held on the 7th day of March, 2007.
RESOLVED that the Chief Executive Officer, President, Vice President or Secretary, shall have the power and authority

1. *To appoint Attorney(s)-in-Fact and to authorize them to execute on behalf of the Company, and attach the seal of the Company thereto, bonds and undertakings, contracts of indemnity and other writing obligatory in the nature thereof and,*

2. *To remove, at any time, any such Attorney-in-Fact and revoke any authority given.*

RESOLVED FURTHER, that the signatures of such officers and the seal of the Company may be affixed to any such Power of Attorney or certificate relating thereto by facsimile, and any such Power of Attorney or certificate bearing such facsimile signatures or facsimile seal shall be valid and binding upon the Company and any such power so executed and certified by facsimile signatures and facsimile seal shall be valid and binding upon the Company in the future with respect to any bond or undertaking to which it is attached as though manually affixed.

IN WITNESS WHEREOF, **BONDEX INSURANCE COMPANY** has caused its seal to be affixed hereto and executed by its President on the 6th day of February, 2026.

BONDEX INSURANCE COMPANY

BY _____
Antonio R. Barner, President

State of GEORGIA
County of COBB

ACKNOWLEDGEMENT

On this 6th day of February, 2026, before me, a notary public, personally appeared Antonio R. Barner, personally known to me, who being duly sworn did say that he is the President of Bondex Insurance Company, the Corporation described in the foregoing instrument, and that the Seal affixed to said instrument is the said Corporate Seal and that he executed the same in his authorized capacity, and that said instrument was signed and sealed on behalf of said Corporation by authority of its Board of Directors.

In Testimony Whereof I have set my hand and affixed my official Seal, the day and year first written above,

MARA BUFFINGTON NOTARY EXPIRES GEORGIA 04/05/2027 PUBLIC FULTON COUNTY

BY _____
Name: Mara Buffington
Notary Public

CERTIFICATE

I, Antonio R. Barner, Secretary of Bondex Insurance Company, do hereby certify that the Power of Attorney and the resolution adopted by the Board of Directors of said company as set forth above, are true and correct transcripts thereof and that neither the said Power of Attorney nor the resolution have been revoked and they are now in full force and effect.

Signed and Sealed at Atlanta, Georgia this **25th** day of **August, 2026**.

BONDEX INSURANCE COMPANY CORPORATE SEAL 2007 NEW JERSEY

BY _____
Antonio R. Barner, Secretary

WARNING: Any person who knowingly and with intent to defraud any insurance company or other person, files and application for insurance of claim containing any materially false information, or conceals for the purpose of misleading, information concerning any fact material thereto, commits a fraudulent insurance act, which is a crime and subjects such person to criminal and civil penalties.

DLG

BONDEX INSURANCE COMPANY

Statutory Financial Statement
December 31, 2025

ASSETS

Bonds	$ 18,672,816
Cash and cash equivalents	$ 5,922,633
Interest due and accrued	$ 154,090
Uncollected premiums & agents' balances	$ 572,260
Net deferred tax asset	$ 14,820
Other assets	$ 1,967,747
Total Assets	$ 27,304,366

LIABILITIES & POLICYHOLDERS' SURPLUS

Liabilities

Other expenses (excluding federal taxes)	$ 137,442
FIT payable	$ 227,516
Ceded reinsurance payable	$ 703,527
Aggregate write-ins for liabilities	$ 5,412,719
Total Liabilities	$ 6,481,204

Surplus

Surplus	
Common stock	$ 2,500,000
Unassigned surplus	$ 6,740,168
Gross paid-in and contributed surplus	$ 11,582,994
Total Surplus	$ 20,823,162
Total Liabilities & Policyholders' Surplus	$ 27,304,366

I, Daniel Henry Bauer, CFO and Treasurer of Bondex Insurance Company, do hereby certify that the foregoing is a true and correct statement of the statutory balance sheet of said Corporation as of December 31, 2025 to the best of my knowledge and belief.

IN WITNESS WHEREOF, I have hereunto set my hand and affixed the seal of said Corporation at Florham Park, New Jersey this 4th day of May, 2026.

Daniel Henry Bauer
CFO and Treasurer of Bondex Insurance Company



REQUEST FOR PROPOSAL
8848
BY
THE CITY OF WATERBURY
Bureau of Water
On Call Insertion Valve Contractor

ATTACHMENT E (Cost Schedule)

(Must be submitted as part of the Proposal in a separate sealed envelope marked "Confidential: Price Proposal.")

Date: August 19, 2026

Kevin McCaffery
Director of Purchasing
City of Waterbury
235 Grand Street, Room 103
Waterbury, CT 06702

Sir:

Pursuant to and in compliance with your RFP, the Undersigned,

ZC Utility Services LLC dba Carner Bros.
(Print or Type Company/Corporate Name)

10 Steel Ct., Roseland, NJ 07068
(Print or Type Business Address)

having carefully examined all the RFP Documents, together with all Addenda, as acknowledged on Attachment C, and having informed itself fully in regard to all conditions and related requirements pertaining to the performance of services required under this RFP; and that with this representation, the undersigned makes this Proposal, as follows:

[continued on following page(s)]

Three years (3) from Notice to proceed.
Up to two (2) additional (1) year Options.

1- Team Insertion Valve

Bid Item	Size	Cost Per Unit, Install Year 1	Cost Per Unit, Install Year 2	Cost Per Unit, Install Year 3	Cost Per Unit, Option 1- Install Year 4	Cost Per Unit, Option 2- Install Year 5
1	4.0 Inch	12,750.00	13,500.00	14,250.00	15,250.00	16,250.00
2	6.0 Inch	13,750.00	14,500.00	15,250.00	16,250.00	17,250.00
3	8.0 Inch	14,750.00	15,500.00	16,250.00	17,250.00	18,250.00
4	10.0 Inch	23,750.00	24,500.00	25,250.00	26,250.00	27,250.00
5	12.0 Inch	27,750.00	28,500.00	29,250.00	30,250.00	31,250.00
6	14.0 Inch	not available				
7	16.0 Inch	not available				
8	18.0 Inch	not available				

2- Hydra-Stop Insertion Valve

Bid Item	size	Cost Per Unit, Install Year 1	Cost Per Unit, Install Year 2	Cost Per Unit, Install Year 3	Cost Per Unit, Option 1- Install Year 4	Cost Per Unit, Option2- Install Year 5
1	4.0 Inch	9,550.00	10,250.00	10,950.00	11,950.00	12,950.00
2	6.0 Inch	10,550.00	11,250.00	11,950.00	12,950.00	13,950.00
3	8.0 Inch	11,550.00	12,250.00	13,950.00	13,950.00	14,950.00
4	10.0 Inch	20,550.00	21,250.00	21,950.00	22,950.00	23,950.00
5	12.0 Inch	22,550.00	23,250.00	23,950.00	24,950.00	25,950.00
6	14.0 Inch	35,550.00	36,550.00	37,550.00	38,550.00	39,550.00
7	16.0 Inch	37,550.00	38,550.00	39,550.00	40,550.00	41,550.00
8	18.0 Inch	not available				

[continued on following page(s)]

In addition, please provide your daily rate after the 7th day.

Dailly Rate Year 1	Dailly Rate Year 2	Dailly Rate Year 3	Dailly Rate Option 1	Dailly Rate Option 2
not applicable				

Materials Markup: Please provide percentage of material markup % of the invoiced cost of materials.

47-2047519
Social Security Number
or Federal Identification Number

Signature of Individual or
Corporate Name

2C Utility Services LLC dba
Company Name Carner Bros.

Corporate Officer
(if applicable)

By: Todd R. Zartman, President
(Title)
10 Steel Ct.
(Business Address)
Roseland, NJ 07068
(City, State, Zip Code)

Date: Aug. 20, 2026

Email: tzartman@carnerbros.com

END OF ATTACHMENT E

10 Steel Ct.
Roseland, NJ 07068
Ph: 973-226-1840
Fax: 973-226-5872
Email: admin@carnerbros.com

August 27, 2026

Kevin McCaffery
Director of Purchasing
The City of Waterbury
235 Grand Street
Waterbury, CT 06702

RE: RFP #8897 – On-Call Insertion Valve Contractor
Response to Request for Revised Cost Proposal

Dear Mr. Kevin McCaffery,

Carner Bros. appreciates the opportunity to continue in the selection process for RFP #8897 – On-Call Insertion Valve Contractor, and we thank The City of Waterbury and the RFP Selection Committee for their consideration of our proposal.

In response to The City's request for a revised Cost Proposal, we have carefully reviewed the pricing submitted with our original proposal. The pricing provided represents our most competitive pricing and was developed based upon the specialized equipment, experienced personnel, and resources necessary to safely and reliably perform the work required under this contract. Our pricing also takes into consideration the on-call and emergency nature of the contract, including the potential for work to be required outside of normal business hours, on weekends, or on holidays, for which the Cost Proposal does not provide separate after-hours or overtime pricing. Accordingly, our submitted pricing must account for the personnel and resources necessary to remain responsive under those circumstances.

As such, we respectfully advise that we are unable to offer further reduction in our proposed pricing. Our original Cost Proposal represents our best and final pricing for the services outlined in the RFP.

Carner Bros. remains very interested in the opportunity to work with The City of Waterbury and is confident in our ability to provide the experience, reliability, and quality of service required under this contract. We appreciate the opportunity to submit our qualifications and pricing for consideration and look forward to the possibility of working with The City.

Respectfully,

Todd R. Zartman
President

"The Underground Specialists"

SPECIAL CONDITIONS

INDEX TO SPECIAL CONDITIONS

ARTICLE

ARTICLE 1 - SPECIAL NOTE…… SC-1

ARTICLE 2- ADDENDUM TO GENERAL CONDITIONS ARTICLE 27……SC-1

ARTICLE 3- ADDENDUM TO GENERAL CONDITIONS ARTICLE 16, 17, 56, 76, 78…….SC-1

ARTICLE 4- ADDENDUM TO GENERAL CONDITIONS ARTICLE 31, 80.., 86……...SC-2

ARTICLE 5- ADDENDUM TO GENERAL CONDITIONS ARTICLE 94……SC-2

ARTICLE 6- ADDENDUM TO GENERAL CONDITIONS ARTICLE 34……SC-3

ARTICLE 7- ADDENDUM TO GENERAL CONDITIONS ARTICLE 78……SC-3

ARTICLE 8- ADDENDUM TO GENERAL CONDITIONS ARTICLE 15……SC-3

ARTICLE 9- ADDENDUM TO GENERAL CONDITIONS ARTICLE 84, 18, 87……SC-3

ARTICLE 10- ADDENDUM TO GENERAL CONDITIONS ARTICLE 82..…….……SC-4

ARTICLE 11- ADDENDUM TO GENERAL CONDISTIONS ARTICLE 41, 43, 57……SC-4

ARTICLE 12- STORAGE...…….…….....SC-4

SPECIAL CONDITIONS

ARTICLE 1. SPECIAL NOTE

These Special Conditions shall be subject to all requirements of the Contract, amend or supplement the General Conditions, and modify all Contract Documents which follow them numerically, as set forth in Section 1.2 of the Contract. These Special Conditions amend or supplement the General Conditions and other provisions of the Bid Documents and shall be subject to all requirements of the Contract. The terms used in these Special Conditions which are defined in the Contract or General Conditions have the meanings assigned to them in said documents. All provisions of the General Conditions which are not so amended or supplemented remain in full force and effect.

This section applies equally and specifically to all contractors supplying labor and/or equipment and/or materials for this Project and all drawings, specifications and general provisions of the Contract, including General Conditions, apply to these Special Conditions. Where items of the Bid Documents or General Conditions are repeated, it is intended to call particular attention to or qualify them; it is not intended that any other parts of the Bid Documents or General Conditions shall be assumed to be omitted if not repeated herein. Whenever the term "Bid" is used herein, it shall mean "Proposal".

Unless expressly provided for otherwise, the costs associated with all work under the Special Conditions shall be included in Consultant's Total Price Proposal.

ARTICLE 2. ADDENDUM TO GENERAL CONDITIONS ARTICLE A27

Reference is made to General Conditions Article:

ARTICLE 27. PERMITS

The Contractor shall obtain local permits and registrations necessary to complete the project at no additional cost to the City, including, but not, limited to the following:

- City of Waterbury Building Permit

The cost of obtaining and maintaining the permits shall be included in the Contractor's Total Bid Price.

ARTICLE 3. ADDENDUM TO GENERAL CONDITIONS ARTICLE 16, 17,56,76,78

Reference is made to General Conditions Articles:

ARTICLE 16. CONTRACTOR'S TITLE TO MATERIALS
ARTICLE 17. "OR EQUAL" CLAUSES
ARTICLE 56. PROTECTION OF WORK AND MATERIALS
ARTICLE 76. DEFECTIVE MATERIALS
ARTICLE 78. SAMPLES AND ORDERING LISTS

The contractor shall furnish all material, equipment, tools, labor and insurance required to perform a complete installation in accordance with this specification and applicable drawings. It is the intention of these specifications that all systems be furnished complete with whatever necessary items are required to produce a satisfactory installation in a working order.
The Contractor shall be responsible for bringing to the attention of the Owner any shortcomings of the design, or there by, shall be responsible in full to meet the conditions set forth, that being, the system is to be in a satisfactory working order.

All material shall be installed in accordance with the instructions of the manufacturers. The work shall be done in strict compliance with state and local ordinances governing this class of work. The prospective bidder shall visit the job site and become familiar with all existing conditions found at the site. The Contractor shall become acquainted with all existing factors and conditions which affect the work. Failure to do so shall not relieve meeting the responsibility to install the work correctly.
The Contractor shall protect the entire installation from injury on the Project until final acceptance. Failure to do so shall be sufficient cause for the Project Engineer to reject any work.

All materials furnished for this Project shall be new, undamaged Deliver materials in manufacturer's original package and store on skids so that the materials are off the ground, and so that product labels are exposed for easy inspection.

ARTICLE 4. ADDENDUM TO GENERAL CONDITIONS ARTICLE 31, 80, 86

Reference is made to General Conditions Article:

ARTICLE 31. USE OF PREMISES AND REMOVAL OF DEBRIS
ARTICLE 80. FINISHING AND CLEANING UP
ARTICLE 86. DUST AND SPILLAGE CONTROL

The Contractor is responsible for the daily clean-up and disposal of all trash and construction debris relating to this Project. Plant dumpsters shall not be used for the disposal of debris. Should the Contractor dispose of any debris into plant facilities, the cost of removal will be deducted from the project's final payment under this contract.

Occupied areas shall be broom cleaned and vacuumed at the end of the work day. Debris and materials shall be removed from the site.

ARTICLE 5. ADDENDUM TO GENERAL CONDITIONS ARTICLE 94

All Materials by this specification shall be the product of one manufacturer. Manufacturers furnishing equipment shall have been engaged in work of this type, for at least five years and shall have completed five installations of equivalent size.

All materials used in the structure shall be new, without defects and free of repairs. The quality of the materials used shall be such that the structure is in conformance with the performance requirements specified herein.

Cladding Membrane: The structure shall be clad with a flame retardant polyethylene fabric manufactured by an approved and reputable supplier with demonstrated long-term performance. The membrane fabric shall be waterproof and free from defects. All roofs, walls, end walls and connecting sections shall be weather tight.

The material shall be selected from the manufacturer's standard colors for the sidewalls and roof panels. The material scrim and coating must be UV stabilized and must carry a minimum 15-year manufacturer's warranty. The minimum fabric please see the minimum fabric specification.

All roofs, walls, end walls and connecting sections shall be weather tight. The material shall be selected from the manufacturer's standard colors for the sidewalls and roof panels. The material scrim and coating must be UV stabilized and must carry a minimum 15-year manufacturer's warranty.
The workmanship shall conform to the best accepted construction practice. Should it become evident that during the course of construction that the items indicated on the plans, are for any reason undesirable, the Contractor shall immediately bring the situation to the attention of the Construction Manager for decisions. The Contractor shall be responsible for installing the proper materials as described by the drawings and specifications.

ARTICLE 6. ADDENDUM TO GENERAL CONDITIONS ARTICLE 34

Reference is made to General Conditions Article:
ARTICLE 34. GENERAL WARRANTY PERIOD

The Contractor shall guarantee all materials and workmanship for a minimum of one (15) full year after formal acceptance of the Project. The Contractor will replace defective material and repair all workmanship defects promptly, and absorb all costs.

ARTICLE 7. ADDENDUM TO GENERAL CONDISTIONS 78
Reference is made to General Conditions Article:
ARTICLE 78. SAMPLES AND ORDERING LIST

The contractor required to submit a sample of the fabric made in accordance with this specification. Samples shall be delivered, at no cost to the architect or owner, to a destination set forth by the architect, seven day prior starting date as a condition of approval.

The Sample may be held by the owner or architect to insure that all equipment delivered conforms in every respect to the sample.

ARTICLE 8. ADDENDUM TO GENERAL CONDISTIONS 15

Reference is made to General Conditions Article:

ARTICLE 15. SHOP DRAWINGS, CATALOG CUTS AND SAMPLES

The contractor shall furnish three sets of drawings for approval, describing and/or illustrating all equipment covered by this contract. Fabrication must not be started until prints with the architects "Final Approval" stamp affixed thereon, have been returned to the manufacturer.

ARTICLE 9. ADDENDUM TO GENERAL CONDITIONS 84, 19, 87

Reference is made to General Conditions Article:

ARTICLE 84. LOADING
ARTICLE 19. PROTECTION OF WORK AND PROPERTY (EMERGENCY)
ARTICLE 87. CARE OF THE WORK

Receive, unload and distribute to jobsite with contractor furnished trucks with minimal disruption to owner occupied areas including: Receiving docks, hallways.

The contractor must coordinate with Construction Manager for any delivery. The contractor shall be responsible to coordinate with the Construction Manager where it is allow to park during working hours.
The contractor shall be responsible for the proper notification of the Construction Manager whenever installation work is to be performed.

ARTICLE 10. ADDENDUM TO GENERAL CONDISTIONS 41, 43, 57

Reference is made to General Conditions Article:

ARTICLE 41. CONTRACTOR'S OBLIGATIONS
ARTICLE 43. SAFETY AND HEALTH REGULATIONS
ARTICLE 57. FURTHER SAFEGUARDS

The contractor is responsible for the safety of its employees.

The contractor nevertheless remains solely responsible for the safety of all persons and property, and must take whatever steps may be necessary or appropriate to assure that safety.

The contractor is solely responsible for the development and implementation of their own safety program.

The contractor shall comply with applicable provisions of federal, state, and municipal safety laws and building codes.

ARTICLE 11. STORAGE

The contractor is responsible to provide its own storage area to store the materials. If the contractor uses any Owner facility area during the construction, contractor shall be required to restore any disturbed area to a condition as good as or better than existing condition. The contractor shall be fully responsible for any damage that occurs to the materials during the storage period.

GENERAL CONDITIONS

INDEX TO GENERAL CONDITIONS

ARTICLE	TITLE	PAGE
1.	PLANS AND SPECIFICATIONS AT THE SITE	GC-1
2.	CONSTRUCTION PROGRESS SCHEDULE	GC-1
3.	ESTIMATED QUANTITIES	GC-2
4.	SCHEDULE OF VALUES; APPLICATION FOR PAYMENT	GC-2
5.	PARTIAL PAYMENTS	GC-2
6.	INSPECTION AND TESTS	GC-2
7.	UTILITIES	GC-3
8.	SEDIMENTATION AND EROSION CONTROL	GC-3
9.	PROTECTION OF ENVIRONMENTAL RESOURCES	GC-4
10.	ENVIRONMENTAL PROTECTION PLAN	GC-5
11.	TEMPORARY UTILITIES	GC-5
12.	ABBREVIATIONS	GC-5
13.	SUBSURFACE EXPLORATION	GC-7
14.	CONTRACT AND CONTRACT DOCUMENTS	GC-7
15.	SHOP DRAWINGS, CATALOG CUTS AND SAMPLES	GC-7
16.	CONTRACTOR'S TITLE TO MATERIALS	GC-8
17.	“OR EQUAL" CLAUSES	GC-8
18.	REPRESENTATIONS OF THE CONTRACTOR	GC-8
19.	PROTECTION OF WORK AND PROPERTY (EMERGENCY)	GC-9
20.	WEATHER CONDITIONS	GC-9
21.	SUBLETTING	GC-9
22.	SUBSTITUTE BOND	GC-10
23.	RIGHT TO WITHHOLD PAYMENTS	GC-10
24.	PAYMENTS BY CONTRACTOR	GC-10
25.	NOTICE OF WARNING	GC-11
26.	PROGRESS MEETINGS.	GC-11
27.	PERMITS	GC-11
28.	RIGHT TO USE THE WORK	GC-11
29.	PROVISIONS REQUIRED BY LAW	GC-11
30.	WAIVER	GC-11
31.	USE OF PREMISES AND REMOVAL OF DEBRIS	GC-12

32. THIS SECTION INTENTIONALLY OMITTED GC-12
33. CONSTRUCTION EQUIPMENT AND MACHINERY GC-12
34. GENERAL GUARANTEE..... GC-13
35. PROCEDURE IN CONSTRUCTION..... GC-13
36. THIS SECTION INTENTIONALLY OMITTED GC-13
37. CONTROL OF WORK GC-13
38. CITY'S CONTROL NOT LIMITED..... GC-14
39. AUTHORITY AND DUTIES OF INSPECTORS GC-14
40. INSPECTION AND CORRECTION OF WORK GC-14
41. CONTRACTOR'S OBLIGATIONS..... GC-15
42. TOILET ACCOMMODATIONS AND DRINKING WATER..... GC-15
43. SAFETY AND HEALTH REGULATIONS..... GC-15
44. OWNERSHIP OF DRAWINGS AND SPECIFICATIONS..... GC-15
45. THIS SECTION INTENTIONALLY OMITTED GC-16
46. LISTING OF EMPLOYMENT OPENINGS GC-16
47. SERVICE OF PROCESS..... GC-16
48. INTENTIONALLY OMITTED GC-16
49. WAGE RATES GC-16
50. SCHEDULE AND POSTING OF MINIMUM WAGE RATES..... GC-16
51. COMPUTATION OF WAGES AND OVERTIME COMPENSATION..... GC-17
52. WAGE UNDERPAYMENTS AND ADJUSTMENTS..... GC-17
53. CONFORMANCE OF WORK..... GC-17
54. DIMENSIONS AND SCHEDULES..... GC-17
55. PROTECTION FROM STORM..... GC-17
56. PROTECTION OF WORK AND MATERIALS..... GC-18
57. FURTHER SAFEGUARDS GC-18
58. FIRST AID TO INJURED..... GC-18
59. CONFORMANCE WITH DIRECTIONS..... GC-18
60. COMPETENT HELP TO BE EMPLOYED GC-18
61. STREETS AND SIDEWALKS TO BE KEPT OPEN..... GC-18
62. LIGHTS, BARRIERS, FENCES, WATCHMEN & INDEMNITY GC-19
63. WORK OUTSIDE REGULAR HOURS..... GC-19
64. BUS LINE INERFERENCE..... GC-19
65. COLD WEATHER WORK..... GC-20

66. BLASTING AND EXPLOSIVES GC-20
67. TUNNELING GC-20
68. RESERVED MATERIALS/EXCAVATED MATERIALS GC-20
69. OBSTRUCTIONS AND CROSSOVERS GC-21
70. DIRECTIONAL SIGNS AND LIGHTS GC-21
71. MAINTENANCE OF WORKPLACE GC-21
72. OPERATIONS AT SEVERAL POINTS GC-21
73. INTERFERENCE WITH EXISTING STRUCTURES GC-21
74. TURF, TOPSOIL AND OTHER REPLACEMENT ITEMS GC-22
75. MATERIALS GC-22
76. DEFECTIVE MATERIALS GC-22
77. INSPECTION AND TESTING OF FURNISHED MATERIALS. GC-22
78. SAMPLES AND ORDERING LISTS GC-22
79. SANITARY CONVENIENCES GC-22
80. FINISHING AND CLEANING UP GC-23
81. RIGHTS OF ACCESS GC-23
82. WORK BY OTHERS GC-23
83. WORK WITHIN THE LIMITS OF PRIVATE PROPERTY GC-23
84. LOADING GC-24
85. COMPLETION OF WORK GC-24
86. DUST AND SPILLAGE CONTROL GC-25
87. CARE OF THE WORK GC-25
88. EMERGENCY WORK GC-25
89. FIRE PREVENTION AND PROTECTION GC-25
90. PLANIMETER GC-25
91. SUPERINTENDENCE GC-25
92. CONTRACT ADMINISTRATION COSTS - OUTSIDE REGULAR HOURS GC-26
93. DAILY REPORTS GC-26
94. MATERIAL AND WORKMANSHIP GC-26
95. TEMPORARY WATER SUPPLY GC-26
96. FITTING AND COORDINATION OF WORK GC-26
97. ARCHEOLOGICAL FINDS GC-27
98. EXCAVATIONS NEAR UNDERGROUND UTILITIES GC-27

99. WATER QUALITY OF WELLS. GC-27
100. WORK IN STATE HIGHWAYS GC-27
101. EXISTING INSPECTION REPORTS GC-28
102. TEST REPORTS; CERTIFICATES OF COMPLIANCE AND SHIPPING LISTS GC-28
103. CLEANING FINISHED WORK GC-28
104. THIS SECTION INTENTIONALLY OMITTED GC-28
105. COMPLIANCE TO ACTS AND EXECUTIVE ORDERS GC-28
106. SEMI - FINAL INSPECTION GC-29
107. CERTIFICATE OF FINAL COMPLETION GC-29
108. FINAL ESTIMATE GC-29
109. CERTIFICATION OF FINAL PAYMENT GC-29
110. FINAL ACCEPTANCE OF PROJECT GC-29
111. ACCEPTANCE OF FINAL PAYMENT GC-30

GENERAL CONDITIONS

INTRODUCTORY NOTE:

These General Conditions supplement the provisions and requirements of the Contract and modify all Contract Documents which follow it numerically, as set forth in Section 1.2 of the Contract. The General Conditions may be amended, revised or supplemented by the Special Conditions which are project specific. The Contractor's attention is directed to the attached Special Conditions for any amendments, revisions or supplements to the General Conditions for this project. The terms used in these General Conditions which are defined in the Contract have the meanings assigned to them in said Contract.

This section applies equally and specifically to all contractors supplying labor and/or equipment and/or materials for this Project and all drawings, specifications and general provisions of the Contract apply to these General Conditions. Where items of the Contract are repeated, it is intended to call particular attention to or qualify them; it is not intended that any other parts of the Contract shall be assumed to be omitted if not repeated herein.

Unless expressly provided for otherwise, the costs associated with all work under the General Conditions shall be included in Contractor's Total Bid Price. As used herein, "Bid" shall mean "Proposal."

There are two (2) affected entities which occupy and perform work at the property of the Water Treatment Facility where this construction contract will take place. They are:

- City of Waterbury, owner of the Water Treatment Facility
- Veolia Water, the operator of the Water Treatment Facility

The Contractor shall coordinate all work activities with the parties mentioned above and keep the Project Engineer apprised of this coordination. The Contractor shall maintain access to all parts of the facilities for the above companies throughout the duration of the construction contract.

ARTICLE 1. PLANS AND SPECIFICATIONS AT THE SITE

1.01 The Contractor shall maintain at the Project site two (2) copies of all Plans, Specifications, Addenda, approved Shop Drawings, Change Orders and other Modifications, Schedules and Instructions, in good order. One copy is to be marked to record all changes made during construction. These shall be available at all times to the Project Engineer and the City or their authorized representatives. At the conclusion of construction, the Contractor is to turn one (1) corrected set over to the Project Engineer.

ARTICLE 2. CONSTRUCTION PROGRESS SCHEDULE

2.01 Within one (1) week after the Notice to Proceed, and prior to commencement of any work on site, the Contractor shall submit for the approval of the City three (3) copies of a Construction Progress Schedule which shall be developed by the Contractor through cooperation of the Project Engineer or authorized personnel. At the same time, the Contractor shall submit the Schedule of Values, Sedimentation and Erosion Control Measures, Water Control Plan and Environmental Protection Plan, as outlined in the various Articles of these General Conditions.

2.02 The Construction Progress Schedule shall indicate the proposed scheduling of the items of work listed in the various divisions of the work in the specifications. The schedule shall state the methods for doing each portion of the work. The schedule shall also indicate all subcontractors to be utilized on the Contract and the portions of the Contract that they will be performing. The Contractor shall evaluate the status of the Project at least monthly, comparing it to the original schedule, which shall be revised as required. The Contractor shall notify the Project Engineer immediately of any circumstances that may affect the current schedule.

2.03 The Contractor shall perform the work of this Contract to satisfy the Construction Progress Schedule as approved by the Project Engineer. However, the Project Engineer and City reserve the right to amend and alter the Construction

Progress Schedule, as approved, at any time and in a manner which the Engineer deems to be in the best interests of the City.

2.04 The Contractor shall be required to execute his work in accordance with the Construction Progress Schedule as prepared and in accordance with any additional requirements specified herein and approved by the Project Engineer. The Construction Progress Schedule shall forecast the times for doing each portion of the work. The Contractor shall arrange the work under this Contract to conform with the Construction Progress Schedule, as it may be revised by the Engineer from time to time, at no additional expense to the City.

ARTICLE 3. ESTIMATED QUANTITIES

3.01 Any Estimated Quantities for the Project furnished on the Bid Form are for Bid comparison purposes only and are not represented to be actual quantities for completion of the Work. Within the limits of available funds, the Contractor will be required to complete the work specified herein at the unit prices provided in the Bid Form whether it involves quantities greater or lesser than the estimate. The Contractor will be compensated only for work actually performed.

ARTICLE 4. SCHEDULE OF VALUES; APPLICATION FOR PAYMENT

4.01 Within one (1) week after the Notice to Proceed, as a basis for estimating partial payments, the Contractor shall submit for the approval of the City, on forms provided by the City, a certified Schedule of Values, broken down into quantities and unit costs for the various parts of the work, divided as may be directed and aggregating the total sum of the Contract; and if required, he shall submit evidence supporting this schedule.

4.02 The Contractor's requisition for payment shall be submitted on forms provided by the City and shall be in such numbers of copies as may be designated by the City. Sample forms are included in the Bid Documents. Alternate payment application forms may be utilized provided they are approved by the City, in writing, prior to submission by the Contractor.

4.03 If the Project is funded by multiple funding sources, the Contractor may be required to submit separate requisitions for payment to each source, on the forms provided by each source and in accord with all requirements of each individual funding source.

4.04 For Lump Sum projects, the requirements for the Schedule of Values are further defined as follows: a) the Schedule of Values shall delineate the various tasks that comprise the lump sum bid item. Each item in the Schedule of Values shall include its proper share of overhead and profit. This schedule, when accepted by Project Engineer, shall only be used as a basis for Contractor’s periodic payment applications. No payment will be made to Contractor until such Schedule has been submitted and accepted by Project Engineer, and b) the lump sum bid item shall break the bid price down sufficiently to provide a convenient and realistic means for determining the amount of work done during various stages of progress.

ARTICLE 5. PARTIAL PAYMENTS

5.01 The City will review the Contractor's monthly requisitions for Partial Payments to arrive at what is, in its opinion, a fair and just estimate of the materials suitably stored on the site and the amount of work performed on the Contract. At its discretion, the City may allow to be included in the monthly requisitions materials stored off the site. In the event the City allows the Contractor to include in its requisitions payments for materials stored off the site, the Contractor shall also submit any additional bonds and/or insurance certificates relating to off-site stored material, and follow such other procedures as may be required by the City.

5.02 In making such Partial Payments for the Project, retainage shall be held in the amount of 5 % of the value of work completed to date. The Retainage does not include additional sums that the City may withhold due to the Contractors failure to comply with construction plans, specifications etc. deemed provisions of this contract.

5.03 Where prices are not broken down sufficiently in the Schedule of Values to accurately determine the value of work completed, Project Engineer will estimate the value of work completed and will deduct some amount so as to arrive at a conservative value which will allow City to easily complete the Work with the unpaid balance. When the required detail in the Schedule of Values is not provided by Contractor, Contractor agrees to accept Project Engineer's determinations.

ARTICLE 6. INSPECTION AND TESTS

6.01 All material and workmanship (if not otherwise designated by the Specifications) shall be subject to inspection, examination and testing by the City and/or Project Engineer at any and all times during manufacture and/or construction and at any and all places where such manufacture and/or construction is carried on. All tests shall be made at the Contractor's expense. Notice of the time of all tests to be made at the site shall be given to all interested parties.

6.02 Without additional charge, the Contractor shall promptly furnish all reasonable facilities, labor and materials necessary to make tests safe and convenient. Special, full size and performance tests shall be as described in the Specifications. The Contractor must obtain the Engineer's approval of any sources of materials to be incorporated into the Project before beginning to use them for the Project.

6.03 If, at any time before final acceptance of the entire Project, the City and/or Project Engineer considers it necessary or advisable to examine any portion of the Project already completed by removing or testing out the same, the Contractor shall upon request furnish promptly all necessary facilities, labor and materials. If such work is found to be defective in any material respect because of a fault of the Contractor or any of its subcontractors, or if any work shall have been covered over without the approval or consent of the City (whether or not it is found to be defective), the Contractor shall be liable for testing costs and all costs of correction, including labor, material, services of required consultants, additional supervision and administrative costs.

6.04 Unless expressly provided for otherwise, for Projects that include material testing to ensure compliance with the Technical Specifications, the Contractor shall be responsible for all testing as required in the relevant sections of the Technical Specifications.

ARTICLE 7. UTILITIES

7.01 The accuracy and completeness of the utility information shown on the Plans is not guaranteed. The Contractor shall make its own investigation of the extent and location of utilities and of the possibility of relocation work by the utility companies, and shall plan its operations accordingly. No claim for any delays, damage or extra work occasioned thereby will be allowed.

7.02 The Contractor shall allow others access to the Project for the purpose of placing, relocating or maintaining utilities, and he shall cooperate in every way in the performance of this Project.

7.03 The Contractor shall notify the utility owners well in advance of the time the Contractor proposes to perform any work which would endanger utility installations, and the Contractor shall cooperate with the utility owners in relocating and/or protecting such installations during construction operations.

7.04 No payment will be made to the Contractor for locating, protecting and making arrangements for relocating public utilities or for any delays caused thereby. The Contractor shall include all costs of this Project in other scheduled items of the Contract.

ARTICLE 8. SEDIMENTATION AND EROSION CONTROL

8.01 All watercourses shall be protected from sedimentation, both during and after construction. The Contractor shall control erosion and sedimentation problems in accordance with Connecticut Guidelines for Soil Erosion and Sediment Control prepared by the Connecticut Council on Soil and Water Conservation, dated 2002, as amended.

8.02 The Contractor shall submit the Sedimentation and Erosion Control Plan for the approval of the Project Engineer within one (1) week after the Notice to Proceed.

8.03 The Contractor shall be responsible for providing silt fences, staked haybales and other temporary erosion control measures which may be required to properly complete this Project. No extra compensation will be allowed, due to water or precipitation levels fluctuation.

ARTICLE 9. PROTECTION OF ENVIRONMENTAL RESOURCES

9.01 The environmental resources within the Project boundaries and those affected outside the limits of permanent work under this Contract shall be protected during the entire period of this Contract. The Contractor shall confine its activities to areas defined by the Plans and Specifications. Environmental protection shall be as stated in the following subparagraphs:

A. Prior to the beginning of any construction, the Contractor shall identify all land resources to be preserved within the work area. The Contractor shall not remove, cut, deface, injure or destroy land resources including trees, shrubs, vines, grasses, top soil and land forms without special written permission from the property owner. No ropes, cables or guys shall be fastened or attached to any trees for anchorage unless specifically authorized. Where such special emergency use is permitted, the Contractor shall provide effective protection for land and vegetation resources at all times as defined in the following subparagraphs.

B. Prior to any construction, the Contractor shall mark the areas that are not required to accomplish all work to be performed under the Contract. Isolated areas within the general work area which are to be saved and protected shall also be marked or fenced. Monuments and markers shall be protected before construction operations commence. Where construction operations are to be conducted during darkness, the markers shall be visible. The Contractor shall convey to its personnel the purpose of marking and/or protection of all necessary objects.

C. Trees, shrubs, vines, grasses, land forms and other landscape features indicated and defined on the Plans to be preserved shall be clearly identified by marking, fencing or wrapping with boards, or any other approved techniques.

D. Earthwork brought to final grade shall be finished as indicated and specified. Side slopes and back slopes shall be protected as soon as practicable upon completion of rough grading. All earth work shall be planned and conducted to minimize the duration of exposure of unprotected soils. Except in instances where the constructed feature obscures borrow areas, quarries and waste material areas, these areas shall not initially be cleared in total. Clearing of such areas shall progress in reasonably sized increments as needed to use the areas developed as approved by the City and/or Project Engineer.

E. Runoff from the construction site shall be controlled by the construction of diversion ditches, benches and berms to retard and divert runoff to protected drainage courses, and any measures required by area wide plans approved under Paragraph 208 of the Clean Water Act, as amended.

F. The Contractor shall construct or install all temporary erosion control features as indicated in the submitted Sedimentation and Erosion Control Plans, or directed by the City and/or Project Engineer. Temporary erosion control measures such as berms, dikes, drains, grassing and mulching shall be maintained until construction of the Project is completed.

G. The Contractor's field offices, staging areas, stockpile storage and temporary buildings shall be placed in areas designated on the submitted Plan. Temporary movement or relocation of the Contractor's facilities shall be made only on approval by the City and/or Project Engineer.

H. Borrow areas shall be managed to minimize erosion and to prevent sediment from entering nearby watercourses.

I. Spoil areas shall be managed and controlled to limit spoil areas and to prevent erosion of soil or sediment

from entering nearby watercourses. Spoil areas shall be developed in accordance with the grading plan indicated on the Plans.

ARTICLE 10. ENVIRONMENTAL PROTECTION PLAN

10.01 Within one (1) week after the Notice to Proceed, and prior to commencement of any work on site, the Contractor shall submit an Environmental Protection Plan for the approval of the City in accordance with the provisions herein specified. The plan shall include but not be limited to the following:

A. A list of Federal, State and Local laws and regulations concerning environmental protection, pollution control and abatement that are applicable to the Contractor's proposed operations and the requirements imposed by those laws and regulations.

B. Methods for protection of features to be preserved within authorized work areas. The Contractor shall prepare a listing of methods to protect resources needing protection, i.e., trees, shrubs, vines, grasses and groundcover, landscape features, air and water quality, fish and wildlife, soil, historical, archeological and cultural resources.

C. Procedures to be implemented by the Contractor to provide the required environmental protection and to comply with applicable laws and regulations. The Contractor shall set out the procedures to be followed to correct pollution of the environment due to accident, natural causes or failure to follow the procedures set out in accordance with the Environmental Protection Plan.

D. The location of the nearest suitable solid waste disposal area and a permit allowing the Contractor to use those facilities.

E. Drawing showing locations of any proposed temporary excavations or embankments for haul roads, stream crossings, material storage areas, structures, sanitary facilities, and stockpiles of excess' or spoil materials.

F. Environmental monitoring plans for the job site, including land, water, air and noise monitoring as necessary, and as required by the Project Engineer.

G. Traffic control plan when necessary.

H. Methods of protecting surface and ground water during construction activities.

I. Work area plan showing the proposed activity in each portion of the area and identifying the areas of limited use or nonuse. The plan should include measures for marking the limits of use areas.

ARTICLE 11. TEMPORARY UTILITIES

11.01 Unless expressly otherwise provided for in the Contract Documents, a) the Contractor shall be responsible for determining and supplying at no cost to the City the temporary utilities that will be needed to complete the work, and b) the necessary temporary utilities shall be installed at the start of the Project. The Contractor shall be responsible for determining and supplying at no cost to the City all temporary utilities of any nature whatsoever needed to complete the work. Unless otherwise provided for in the Bid Documents, all necessary temporary utilities shall be installed at the start of the Project and removed prior to final completion of the Project, with the site being left in the same condition as it was at the start of the Project, all unless otherwise authorized in writing by the City.

ARTICLE 12. ABBREVIATIONS

12.01 Where one of the following abbreviations are used in the Specifications, they shall have the meaning set forth opposite each below:

AASHTO American Association of State Highway and Transportation Officials

ACI	American Concrete Institute
AGA	American Gas Association
AIEE	American Institute of Electrical Project Engineers
AISC	American Institute of Steel Construction
API	American Petroleum Institute
ANSI	American National Standards Institute
ASCE	American Society of Civil Engineers
ASHRAE	American Society of Heating, Refrigeration and Air Conditioning Engineers
ASME	American Society of Mechanical Engineers
ASTM	American Society of Testing and Materials
AWG	American (or Brown and Sharpe) Wire Gauge
AWWA	American Water Works Association
CONNDOT	Connecticut Department of Transportation
DEP	Department of Environmental Protection
EDR	Equivalent Direct Radiation
EPA	Environmental Protection Agency
FWQA	Federal Water Quality Administration
IBR	Institute of Radiator and Boiler Manufacturers
MCB	Master Car Builders
NBS	National Bureau of Standards
NEC	National Electrical Code (latest edition)
NEMA	National Electrical Manufacturers Association
NEWWA	New England Water Works Association
NFPA	National Fire Protection Agency
NPT	National Pipe Thread
SMACNA	Sheet Metal and Air Conditioning Association
OS&Y	Outside Screw and Yoke
STL.WG	United States Steel Wire, Washburn and Moen, American Steel And Wire Companies and Roebling Gauge
USS GAUGE	United States Standard Gauge

WOG Water, Oil, Gas

WSP Water Steam Pressure

"Federal Specification" A Federal specification issued by the Federal Supply Services Administration, Washington, D.C.

ARTICLE 13. SUBSURFACE EXPLORATION

13.01 Where applicable, the boring logs, probes and related information contain data regarding subsurface conditions at the dates and location indicated. This information is shown for the convenience of the Contractor, but is not guaranteed to be correct or complete, and it is not warranted that it represents a true or approximately true picture of the actual subsurface conditions to be encountered.

ARTICLE 14. CONTRACT AND CONTRACT DOCUMENTS

14.01 The City shall interpret its own requirements. In case of any conflict or inconsistency between the provisions of this signed portion of the Contract and those of the Specifications, the provisions of the signed portion of the Contract shall govern.

14.02 The City's record copy of the Contract Documents shall control and shall be effective and binding on the Contractor. In the event that any provision in the Contract Documents conflict with any other provision therein, the priority of the documents shall be in accordance with Section 1.2 of the Contract.

ARTICLE 15. SHOP DRAWINGS, CATALOG CUTS AND SAMPLES

15.01 The Contractor shall promptly submit to the Project Engineer six copies of each submittal prepared in accordance with the approved schedule. After examination of such submittal by the Project Engineer and the return thereof, the Contractor shall make such corrections to the submittal as have been indicated and shall furnish the Project Engineer with five corrected copies. If requested by the Project Engineer, the Contractor must furnish additional copies. Regardless of corrections made on, or approvals given to, such submittal by the Project Engineer, the Contractor shall nevertheless be responsible for the accuracy of such submittal. The Contractor shall also be responsible for the submittal's conformity to the Submittal and Specifications, unless the Contractor notifies the Project Engineer in writing of any deviations at the time of submission of the submittal.

15.02 Submittal of all fabricated work shall be submitted to the Project Engineer and no work shall be fabricated unless it is done at the Contractor's own risk until approval has been given by the Project Engineer and City.

15.03 The Contractor shall submit all submittals on dates sufficiently in advance of requirements in order to enable the Project Engineer and City to properly review them. This period shall include time to correct, resubmit and recheck, if necessary, and no claim for delay will be granted to the Contractor because of the Contractor's failure in this respect. The Project Engineer and City will be given a minimum of four (4) weeks for the initial review of each submitted submittal.

15.04 All submitted submittals must bear the approval stamp of the Contractor and reference conformance to the applicable provisions of the Specifications as evidence that the Contractor has checked the drawings. Any drawings submitted without this stamp of approval will not be considered and will be returned to the Contractor for resubmission. If the submittals show variations from the requirements of the Contract Documents because of standard shop practice or other reason, the Contractor shall make specific mention of such variation in the letter of submission to the Project Engineer. If the variation is acceptable to the Project Engineer and City, suitable action may be taken for proper adjustment. If not acceptable, the Contractor shall not be relieved from the responsibility for executing the work in accordance with the Contract Documents, although such submittals had been approved.

15.05 Where submittals are submitted by the Contractor that indicate a departure from the Contract Drawings which

the Project Engineer deems to be a minor adjustment and in the City's interest and not involving a change in the Contract price or an extension in time, then the Project Engineer may approve the drawings. Such approval will contain, in substance the following:

> The modification shown on the attached drawings is approved in The interest of the City to effect an improvement for the project and is ordered with the understanding that it does not involve any change in the Contract price or time. The modification is generally subject to all Contract stipulations and covenants and it is without prejudice to any and all rights of the City under the Contract.

The approval of submittals will be general and shall not relieve the Contractor from the responsibility for adherence to the Contract nor of the responsibility for any errors that may exist.

15.06 The Contractor agrees to hold the Project Engineer and the City harmless and to defend them against damage or claims for damages arising out of injury to others or to property of third parties which result from errors on shop or working drawings, whether or not they have been approved by the Project Engineer and/or the City.

ARTICLE 16. CONTRACTOR'S TITLE TO MATERIALS

16.01 No material, supplies or equipment for the work shall be purchased by the Contractor, or by any Subcontractor, subject to any chattel mortgage or under any conditional sale or other agreement by which an interest therein or in any part thereof is retained by the seller or supplier. The Contractor warrants good title to all material, supplies and equipment installed or incorporated in the work. The Contractor further warrants that, upon completion of all work, he will deliver the premises, together with all improvements and appurtenances constructed thereon, to the City free of any claims, liens, charges or encumbrances. The Contractor further warrants that neither the Contractor nor any person, firm or corporation furnishing any material, labor or equipment for any work covered by this Contract shall have a right to lien upon the premises or any improvement or appurtenance thereon.

ARTICLE 17. "OR EQUAL" CLAUSES

17.01 Unless otherwise provided for in the Bid Documents, the Contract will be on the basis of material and equipment described on the Bid Documents. However, subsequent to award of the Work, whenever a material or article required is specified or shown on the plans by using the name of a proprietary product or of a particular vendor or manufacturer, any materials or article which, in the sole discretion of the Project Engineer, is equal or superior to the specified item to material, may be considered an “equal.” Requests for substitutions must be supported by evidence such as technical data, test results, or other pertinent information that demonstrate that the substitute offered is equal or better than the specification's requirements. Such items shall not be purchased or installed without the written approval of the Project Engineer. In all cases, only new materials shall be used for the work.

ARTICLE 18. REPRESENTATIONS OF THE CONTRACTOR

18.01 The Contractor represents and warrants:

(a) That he is financially solvent and that he is experienced and competent to perform the type of work or to furnish the plant, material or equipment to be performed or furnished by him; and

(b) That he is familiar with all Federal, State and municipal laws, ordinances, orders and regulations which may in any way affect the work of those employed therein, including but not limited to any special acts relating to the work or to the project of which it is a part; and

(c) That such permanent and temporary work required by the Contract Documents to be done can be satisfactorily constructed and be used for the purpose for which it is intended, and that such construction will not injure any person nor damage any property; and

(d) That he has carefully examined the drawings, specifications and addendum (or addenda) if any, and the site of the work, and that, from his own investigations, he has satisfied himself as to the nature, quality and quantity of surface and subsurface materials likely to be encountered; of the character of equipment required for the work; of other facilities needed for the performance of the work; of the general and local conditions and of all other materials which in any way may affect the work and its performance; and

(e) That he is aware of the hazards involved in the work and the danger to life and property both evident and inherent and that he will conduct the work in a careful and safe manner without injury to persons or property; and that he can provide the necessary equipment, labor and materials to complete the contract work within the specified contract duration.

ARTICLE 19. PROTECTION OF WORK AND PROPERTY (EMERGENCY)

19.01 The Contractor shall at all times safely guard and protect the City's property from injury or loss in connection with this contract. He shall at all times safely guard and protect his own work and that of adjacent property from damage. The Contractor shall replace or make good any such damage, loss or injury unless such is caused directly by errors contained in the Contract or by the City or his duly authorized representatives.

19.02 In case of an emergency that threatens loss or injury of property and/or safety of life, the Contractor will be allowed to act in a diligent manner without previous instructions from the City. He shall notify the City immediately thereafter. Any claim for compensation for this work by the Contractor due to such extra work shall be promptly submitted to the City for approval of payment.

19.03 Where the Contractor has not taken action but has notified the City of an emergency threatening injury to persons or damage to the work or to any adjoining property, he shall act as instructed or as authorized by the City.

19.04 The amount of reimbursement claimed by the Contractor on account of any emergency action shall be determined in the manner provided elsewhere in the Contract Documents.

ARTICLE 20. WEATHER CONDITIONS

20.01 In case of temporary suspension of the work, or during inclement weather, or whenever the City shall direct, the Contractor shall carefully protect his work and materials against damage or injury from the weather. The Contractor shall cause all his subcontractors to provide the same protection for their portion of the work. If, in the opinion of the City, any work or material was damaged or injured by reason of failure on the part of the Contractor, or any of his subcontractors, so to protect his work, or otherwise damaged by the negligence of the Contractor or any of his subcontractors or their agents or servants, or is otherwise defective, such materials shall be removed and replaced at the expense of the Contractor.

20.02 All work shall be temporarily suspended when the Contractor can no longer properly pave exposed areas in accordance with the plans and specifications during inclement weather or during winter months.

ARTICLE 21. SUBLETTING

21.01 The Contractor is not to assign, transfer or sublet the Contract in whole or in part to any other person or persons without written permission from the Project Engineer and the express resolution of the City. The Contractor cannot abridge the terms of the Contract in any way without written permission of the Project Engineer and the express resolution of the City. The Contractor must keep the Contract in his name and control until all work is completed and accepted by and the City. The Contractor shall likewise not assign any of the money payable under this Contract. Approval by the Project Engineer and City of the subletting of any part of the work shall not, under any circumstances, relieve the Contractor or his Surety of any liabilities or obligations under the terms of the Contract Documents.

21.02 The Contractor shall be as fully responsible to the City for the acts and omissions of his subcontractors, and of the persons either directly or indirectly employed by them, as he is for the acts and omissions of persons directly employed by him. Should any subcontractor violate any of the terms of these specifications, the City may, at its option, require the Contractor to end and terminate such subcontract.

21.03 The Contractor shall cause appropriate provisions to be inserted in all subcontracts relative to the work to bind subcontractors to the Contractor by the terms of the Contract and the General Conditions and other contract documents. This language is to be applicable insofar as necessary to the work and is to give the Contractor the same power over as regards terminating any subcontract as the City may exercise over the Contractor under any provisions of the Contract Documents.

21.05 Nothing contained in this Contract shall create any contractual relation between the City and any subcontractor.

ARTICLE 22. SUBSTITUTE BOND

22.01 If, at any time, the Contractor's Surety or Sureties, or the carriers of other insurance herein specified to be written, become insolvent or, in a reasonable judgment of the City, become unsafe or unsound then, upon five business days written notice from the City to the Contractor, the Contractor shall substitute such Performance and Labor and Material Bond or insurance with such other Surety or carrier in such form as shall be acceptable to the City. Any additional premium caused by such substitution shall be paid for by the Contractor. No further payments will be deemed due nor will be made until the new Surety or Sureties have furnished such an acceptable bond to the City.

ARTICLE 23. RIGHT TO WITHHOLD PAYMENTS

23.01 The City may withhold from the Contractor so much of any approved payments due as may in the judgment of the City be necessary to:

1. Assure the payment of any lien, stop notice or claim, filed with the City for work, labor, or materials done, performed or delivered and used in the prosecution of the work herein provided for (whether in strictly legal form or otherwise)
2. Protect the City from loss due to defective work not remedied or through any improper or defective machinery, implements or appliances used by the Contractor or for failure of the Contractor to fully comply with any requirements of the Contract
3. Protect the City from loss due to injury to persons or damage to work or property of other contractors, subcontractors or others caused by the act' or neglect of the Contactor or any subcontractors.

23.02 The City shall have the right, as agent for the Contractor, to apply any amounts so withheld in such manner as the City may deem proper to satisfy such claims or to secure such protection. Such applications of such money shall be deemed payments to the account of the Contractor.

ARTICLE 24. PAYMENTS BY CONTRACTOR

24.01 The Contractor shall pay:

1. For all transportation and utility services not later than the 20th day of the calendar month following that in which services are rendered.
2. For all material, tools and other expendable equipment to the extent of ninety-five per cent (95 %) of the cost thereof, not later than the 20th day of the calendar month following that in which the materials, tools and equipment are delivered at the site of the project.
3. For all material, tools and other expendable equipment the balance of the cost in (2) above not later than the 30th calendar day of the month following the completion of that part of the work in or on which such material, tools and other expendable equipment are incorporated.
4. To each of the subcontractors not later than the 5th day following each payment to the Contractor, the respective amounts allowed the Contractor on account of the work performed by the subcontractors to the extent of such subcontractor's interest therein.

ARTICLE 25. NOTICE OF WARNING

25.01 If the Contractor shall fail to make prompt payment to persons supplying labor or materials for the work; or refuse or fail to supply enough properly skilled workmen or proper materials; or refuse or fail to prosecute the work or any part thereof in accordance with the Contract Documents or with such diligence as will insure its completion within the period herein specified (or any duly authorized extension thereof); or fail to complete the work within said period; or refuse to regard laws ordinances, codes or instructions of the City then the City shall forward A Notice of Warning to the Contractor by registered mail at the address given in the Contract. In the event the Contractor fails to comply with said Notice of Warning within five (5) days from receipt thereof, the City shall have the right to terminate the Contract.

ARTICLE 26. PROGRESS MEETINGS

26.01 Progress meetings will be held weekly at locations, dates and times selected by the City for the purpose of reviewing, scheduling and coordinating the Project's progress as well as other matters.

ARTICLE 27. PERMITS

27.01 The Contractor shall keep himself fully informed of all existing and current Municipal, State or Federal ordinances, regulations or laws in any way limiting or controlling the operations or actions of those engaged in the work or affecting the materials supplied to or by them. The Contractor shall at all times observe and comply with all such valid and binding ordinances, laws or regulations. The Contractor shall protect and indemnify the City and its representatives against any claims arising from, or based upon, any violation of the same.

ARTICLE 28. RIGHT TO USE THE WORK

28.01 The City may enter upon the use of the whole or of any portion of the work, which may be in condition to use, at any time before its final acceptance. Such use shall not constitute, or be evidence of, acceptance by the City or by the Project Engineer of the whole or any part of the material furnished or work performed under the Contract.

ARTICLE 29. PROVISIONS REQUIRED BY LAW

29.01 Each and every provision of law and clause required to be inserted in this Contract shall be deemed to be inserted herein and the Contract shall be read and enforced as though it were included herein. If, through mistake or otherwise, any such provision is not inserted, then, upon application of either party, the Contract shall forthwith be physically amended to make such insertion.

29.02 If this Contract contains any unlawful provisions not an essential part of the general structure of the Contract, and which shall not appear to have been a controlling or material inducement in the making thereof, the same shall be deemed stricken from the Contract without affecting the binding force of the remainder.

ARTICLE 30. WAIVER

30.01 Neither the inspection by the City or Project Engineer or by any of their employees; nor any order, measurement or certificate by the Project Engineer; nor any order by the City for the payment of any money; nor any payment for or acceptance of the whole or any of the work by the Project Engineer for the City; nor any extension of time; nor any possession taken by the City or its employees shall operate as a waiver of any provision of this Contract or of any power herein reserved to the City. Nor shall such action waive any right to damages herein provided. Nor shall any waiver of any breach of the Contract constitute a waiver of any other or subsequent breach. Any remedy provided in this Contract shall be construed as cumulative - i.e. in addition to each and every other remedy herein provided.

30.02 No modification of this Contract or waiver of any of its items or provisions, except as herein provided, shall be made by, or on behalf of, the City, excepting by a resolution duly adopted by said City and spread upon its

minutes.

ARTICLE 31. USE OF PREMISES AND REMOVAL OF DEBRIS

31.01 The Contractor expressly undertakes at his/her own expense:

1. To take every precaution against injuries to persons or damage to property.
2. To store apparatus, materials, supplies and equipment in such orderly fashion at the site of the work as will not unduly interfere with the progress of the work or the work of any other contractor.
3. To place upon the work or any portion thereof only such loads as are consistent with the safety of that portion of the work.
4. To frequently clean up all refuse, rubbish, scrap materials and debris caused by the Contractor's operations to the end that at all times the site of the work shall present a neat, orderly and work manlike appearance.
5. To remove all surplus material; falsework; temporary structures including foundations thereof; plant of any description and debris of any nature resulting from the Contractor's operations before final payment is made.
6. To put the site in a neat orderly condition, to remove all clean-up materials, to remove such materials from the construction site, and to deposit them in a refuse disposal site at his/her expense.
7. To effect all cutting, fitting or patching of work required to make the same conform to the Drawings and Specifications and, except with the consent of the City, not to cut or other wise alter the work of any other contractor.

ARTICLE 32. THIS SECTION INTENTIONALLY OMITTED

ARTICLE 33. CONSTRUCTION EQUIPMENT AND MACHINERY

33.01 The Contractor shall furnish and maintain, at its own cost and risk, all tools, apparatus and appliances, hoists and/or cranes and power for same, scaffolding, runways, ladders, temporary supports and bracing and all other similar work or material necessary to insure speed, convenience and safety in the execution of its Contract. All such items shall be subject to approval of the City, upon the Project Engineer’s recommendation, as to general stability, type and location, but the responsibility for proper design, strength and safety shall remain with the Contractor. All such items shall comply with OSHA regulations and all other applicable codes, statutes, rules and regulations.

33.02 The Contractor shall provide all drains, drainage, ditches and pumping apparatus (including power and attendance for same) that may be necessary to keep all excavations and sub-grade work free from water.

33.03 All machines, equipment, trucks and vehicles used in the prosecution of the work, or in connection therewith, shall be in proper working condition at all times. Only gasoline, electric or diesel engines shall be used for the power in operating equipment.

33.04 The Contractor shall be responsible for curtailing noise, smoke, fumes or other nuisances resulting from the operations. The. Contractor shall, upon written notification from the City or Project Engineer, make any repairs, replacements, adjustments or additions and furnish mufflers when necessary to' fulfill requirements. No oil tanks for fueling equipment shall be stored less than one hundred (100) feet from any watercourse.

33.05 All costs involved in complying with the stipulations outlined shall be included in the various prices bid in the proposal.

ARTICLE 34. GENERAL WARRANTY PERIOD

34.01 If, within the one year Warranty Period as set forth in Section 7 of the Contract, any portion of the work shall, in the opinion of the City, require repairing, replacing or rebuilding, the Contractor shall start such repairs within five (5) business days after receipt of notice from the City. If the Contractor shall fail to or neglect to start the repairs within five (5) business days, the City may employ such other person or persons as it may deem proper to make such repairs. The City will charge the Contractor the cost thereby incurred. Nothing herein provided

shall limit the liability of the Contractor or Surety to the City for non-performance of the Contractor's obligations at any time.

34.02 The Payment and Performance Bonds shall remain in full force and effect through the one year Warranty Period.

ARTICLE 35. PROCEDURE IN CONSTRUCTION

35.01 The Contractor shall start work and carry it on at such point or points and in such order of precedence and at times and seasons as may be determined by the City. The Contractor shall complete the various portions of the work in accordance with the schedule approved by the City.

35.02 A complete organization, complement of equipment and ample materials shall be on hand before actual work commences. The Contractor shall so arrange his/her organization, plant, equipment and materials so that construction operations will be carried on continuously. The Contractor will not be permitted to reduce the force of workers or remove any equipment from the work if such reduction or removal impairs the progress of the work.

35.03 In the event that the City awards more than one contract to the Contractor, the Contractor shall be required to prosecute the work on each contract simultaneously. The Contractor will be required to maintain a separate and independent organization and staff, labor forces and machinery on each contract in order to complete the work within the time set forth for the respective contracts.

ARTICLE 36. THIS SECTION INTENTIONALLY OMITTED.

ARTICLE 37. CONTROL OF WORK

37.01 The Contractor shall abide by all orders, directions and requirements of the Project Engineer in the performance of the work.

37.02 At all times work is being performed under this Contract, the Contractor shall have an English-speaking superintendent, as an employee of the Contractor, present at the site. The superintendent must have proper knowledge of all applicable project requirements and conditions and must have authority to fully represent the Contractor with power to act and to be the recipient of orders and to obey all the instructions of the Project Engineer and/or the City. If proper provision for the carrying out of this stipulation is not made, then the Contractor shall be held responsible for the execution of such orders and instructions which the Project Engineer and/or City may deem necessary to issue to any employee regarding the work. The City or Project Engineer may order the work stopped until a duly authorized representative of the Contractor appears and receives instructions. No claims for damages or for an extension time in which to complete the work because of such delay will be allowed the Contractor.

37.03 In all cases, the Project Engineer shall determine classifications, quantities, quality, acceptability and fitness of the several kinds of work that are to be paid for under the Contract. The Project Engineer and/or City shall interpret the Plans and Specifications and any extra work orders and shall determine all questions in relation to said work and to the construction thereof.

37.04 The Contractor shall not employ any plant, equipment, material, methods or workers to which the City objects. The Contractor shall not remove any plant, materials, equipment or other facilities from the site of the work without the City's permission.

ARTICLE 38. CITY'S CONTROL NOT LIMITED

38.01 The enumeration in this Contract of particular instances in which the opinion, judgment, discretion or determination of the City shall control, and in which work shall be performed to the City’s satisfaction and approval or inspection, shall not imply that only matters similar to those enumerated shall be so governed. Without exception all the work shall be so governed and performed.

ARTICLE 39. AUTHORITY AND DUTIES OF INSPECTORS

39.01 Inspectors shall be authorized to inspect all work done and all materials furnished. Such inspection may extend to all parts of the work and to the preparation or manufacture of the materials to be used. In the case of any dispute arising between the Contractor and an Inspector as to materials furnished, or as to the manner of performing the work, the Inspector shall have the authority to reject material or to suspend the work until the question at issue can be referred to, and decided by, the City.

39.02 The Inspector shall not be authorized to revoke, enlarge, relax or release any requirements of these Specifications nor to approve or accept any of the provisions of the Specifications. The Inspector shall in no case act as a foreman or perform other duties for the Contractor. The Inspector shall not interfere with the management of the work by the Contractor. Any advice, which the Inspector may give the Contractor, shall not be construed as binding the City or the Project Engineer in any way. Such advice will not release the Contractor from the fulfillment of the terms of the Contract.

ARTICLE 40. INSPECTION AND CORRECTION OF WORK

40.01 All material furnished and work done will be inspected by the Project Engineer. The Project Engineer shall condemn any work or materials not in accordance with the Specifications. All condemned work and materials shall be removed and other work and materials furnished in accordance therewith. All materials rejected by the Project Engineer as being unfit for the particular clause in the Specifications to which they refer shall be removed from the site. Removal shall be within twenty-four (24) hours or shorter if the Project Engineer so directs. Should the Contractor refuse to remove the work and materials as ordered, then the Project Engineer may stop the Contractor from proceeding with the work. The City may supply workers and materials to remove the condemned work and materials at the expense of the Contractor.

40.02 Failure on the part of the Project Engineer, or any authorized Inspectors, to detect inferior work or materials, and to condemn the same, shall not be construed to imply an acceptance of such work or materials. Such failure shall not be construed as barring the City, at any subsequent time, from the recovery of such sum of money from the Contractor which may be required to construct or to build anew all portions of the work in which fraud was practiced, improper work executed or improper material furnished and built into the work. The Contractor shall furnish all necessary facilities should it be desirable at any time to make an examination of the work already completed.

40.03 If any work is found defective in any respect, the expense of the examination must be borne by the Contractor. If all work is found satisfactory, the expense of the examination will be paid for as Extra Work.

40.04 If, in the opinion of the City, it is undesirable to reconstruct or correct any portion of the work injured or not performed in accordance with the Contract Documents, the Contractor's compensation hereunder shall be reduced by such amount as may be equitable under all circumstances.

ARTICLE 41. CONTRACTOR'S OBLIGATIONS

41.01 The Contractor shall and will, in good workmanlike manner, do and perform all work and furnish all supplies and material, machinery, equipment, facilities and means, except as herein otherwise expressly specified, necessary or proper to perform and complete all work required by this Contract. All to be accomplished within the time specified; in accordance with the provisions of this Contract and Specifications; in accordance with the Plans and Drawings pertaining to this Contract; in accordance with any and all supplemental Plans and Specifications and in accordance with the directions of the City as given from time to time during the progress of the work. The Contractor shall furnish, erect, maintain and remove such construction plant and such temporary work as may be required. The Contractor alone shall be responsible for the safety, efficiency and adequacy of the plant, appliances and methods. The Contractor shall be responsible for any damage, which may result from their failure or from their improper construction, maintenance or operation. The Contractor shall observe, comply with and be subject to all terms, conditions, requirements and limitations of the Contract and the Specifications. The Contractor shall do, carry on and complete the entire work to the satisfaction of the City.

41.02 The Contractor shall be solely responsible for all the work and shall provide all precautionary measures necessary for preventing injury to persons or damage to property. All injury or damage, of whatever nature, resulting from the work, or resulting to persons, from whatever cause, shall be the responsibility of, and shall be borne and sustained by, the Contractor. The Contractor shall hold the City and Project Engineer, or their agents, harmless and shall defend and indemnify the City and Project Engineer, or their agents, against damages, or claims for damages, due to injury to .persons or to property arising out of the execution of work and for damages to material furnished for the work; for infringement of inventions, patents and patent rights used in doing the work; for damages arising out of the use of any improper material, equipment or labor used in the work and for any act of omission by any subcontractors therein. The Contractor shall bear all losses including, but not limited to, losses sustained on account of the character, quality or quantity of any part or all of the work, or because the nature of the land in or on which the work is done being different from what may have been estimated or indicated, or on account of the weather, elements or other causes, except for acts beyond the reasonable control of the Contractor.

ARTICLE 42. TOILET ACCOMMODATIONS AND DRINKING WATER

42.01 The Contractor shall provide necessary sanitary toilet accommodations and drinking water for the workers. Separate facilities shall be provided for female workers.

ARTICLE 43. SAFETY AND HEALTH REGULATIONS

43.01 These documents, and the joint and several phase of construction hereby contemplated are to be governed at all times by applicable provisions of the Federal law(s), including, but not limited to, the latest amendments of the following:

1. Williams-Steiger Occupational Safety and Health Act of 1970, Public Law 91-956.
2. Part 1910 - Occupational Safety and Health Standards; Chapter XVII of Title 29, Code of Federal Regulations.
3. Part 1926 - Safety and Health Regulations for Construction, Chapter XVII of Title 29, Code of Federal Regulations.

43.02 This project is subject to all of the Safety and Health Regulations (see 29 CFR 1926m as amended) as promulgated by the U. S. Department of Labor on June 24, 1974. The Contractor shall thoroughly familiarize. him/herself with the requirements of these regulations.

ARTICLE 44. OWNERSHIP OF DRAWINGS AND SPECIFICATIONS

44.01 Subsequent to award of the contract, with the exception of the Contractor's executed set, all drawings and specifications are the property of the City. The City shall furnish one (1) paper and one electronic set, in PDF Format, of the construction drawings and specifications to the Contractor without charge. Additional sets will be furnished upon request at the cost as determined by the City. Such drawings and specifications are not to be used in other work. Any sets in usable condition shall be returned to the City upon request, at the completion or cessation of the work or the termination of the Contract.

ARTICLE 45. THIS SECTION INTENTIONALLY OMITTED

ARTICLE 46. LISTING OF EMPLOYMENT OPENING

46.01 This Contract is executed subject to the Governor's Executive Orders No. 3 and No. 17, which are hereby made a part of this agreement. The Governor's Executive Order No, 17 requires, inter alia, that all contractors and subcontractors shall list all employment openings with the office of the Connecticut State Employment Service in the area in which the work is to be performed or where the services are to be rendered. Failure of the Contractor to conform to the requirements of the Governor's Executive Orders No. 3 and No. 17, and any orders, rules, or regulations issued pursuant thereto, shall be a basis for termination of this agreement by the City.

ARTICLE 47. SERVICE OF PROCESS

47.01 The Contractor, if not a resident of the State of Connecticut, or, in the case of a partnership, the partners, if not residents, hereby appoint(s) the Secretary of State of the State of Connecticut, and successors in office, agent for service of process. Such service, as arising out of, or because of, this Contract. Such appointment shall in effect throughout the life of this Contract and for a period of six (6) years thereafter.

ARTICLE 48. INTENTIONALLY OMITTED

ARTICLE 49. WAGE RATES

49.01 INTENTIONALLY OMITTED.

49.02 For Prevailing Wage Rate projects, the Contractor shall furnish to the Project Engineer certified copies of payrolls showing the names of its employees working on the Project, the specific days and hours and number of hours that each of them has spent in doing so, and the amount paid to each person for said work.

ARTICLE 50. SCHEDULE AND POSTING OF MINIMUM WAGE RATES

50.01 Where applicable, the Contractor, and every subcontractor, shall post a legible copy of the Minimum Wage Rates and Classifications included in the Contract Documents. This posting shall be in a prominent and accessible place at the site of the work (See ARTICLE 46). The schedule shall show all determined minimum wage rates for the various classes of laborers and mechanics to be engaged to work on the project. The schedule shall also show all deductions, if any, required by law to be made from wages actually earned by the laborers and mechanics so engaged.

50.02 The rates established by each schedule are the minimum and all employees shall be paid no less than the established rate for each trade or occupation. In the case of a conflict between schedules in anyone trade or occupation, the higher rate listed shall control and such higher rate shall be considered to be the minimum.

50.03 State: Where applicable, the minimum rates of wages and schedule of supplements to be provided for the various trades shall be in accordance with the Prevailing Wage rate Schedule included herein. The rate of wages and schedule of supplements for any trade not appearing or mentioned in this schedule shall be in accordance with the prevailing rates established for that particular trade by the Connecticut Department of Labor. Minimum wages required to be paid shall include supplements for hospital, surgical, medical or other benefits as determined by Sections 31-53 and 3254 of the General Statutes of the State of Connecticut. The Contractor shall file a Wage Certification Form with the Labor Department of the State of Connecticut prior to beginning work on the site.

50.04 If for any reason and at any time, the Federal Government or the State of Connecticut shall in any way supplement, change or amend the Prevailing Wage Rates Schedule, then the Contractor or subcontractor shall follow such Schedule as supplemented, changed or amended. In no case shall the Contractor or subcontractor be entitled to any additions, compensations or extras because of any supplement, change, amendment or predetermination of the Prevailing Wage Rate Schedule.

50.05 Federal Wage Rates, where applicable, shall be applied in any case where they exceed the State of Connecticut Minimum Wage rates or in any case where a rate has not been established by the State.

ARTICLE 51. COMPUTATION OF WAGES AND OVERTIME COMPENSATION

51.01 The Contractor and each subcontractor shall comply with all applicable Federal, State and local laws or ordinances with respect to the hours worked by laborers and mechanics engaged in work on the project. The Contractor and all subcontractors shall also comply with all applicable Federal, State and local ordinances with respect to compensation for overtime hours worked by laborers and mechanics engaged in work on the project.

ARTICLE 52. WAGE UNDERPAYMENTS AND ADJUSTMENTS

52.01 In addition to any applicable Federal or State regulations, the City may, in the case of underpayment of wages to any worker on the project under this Contract by the Contractor or by any subcontractor, withhold an amount from payments due the Contractor. Said amount to be sufficient to pay such worker the difference between the wages required to be paid the worker under this Contract and the amount actually paid the worker for the total number of hours worked. The City will disburse such amount so withheld by it for, and on behalf of, the Contractor to the employee to whom the amount is due. Such monies withheld pursuant to this article will be in addition to percentages to be retained pursuant to other provisions of the Contract.

ARTICLE 53. CONFORMANCE OF WORK

53.01 The work, during its progress and at its completion, shall conform to the work as shown on the drawings and to the directions given by the Project Engineer from time to time. The work shall be subject to such modifications or additions as the Project Engineer may deem necessary during the execution of the work. In no case will any work be paid for which is performed in excess of such requirements. The work shall also be accomplished in accordance with the Specifications.

ARTICLE 54. DIMENSIONS AND SCHEDULES

54.01 The Contractor will be required to check all dimensions and quantities shown on the drawings or schedules given to him by the Project Engineer. The Contractor shall notify the Project Engineer of all errors therein which he may discover by examining and checking the same. The Contractor shall not take advantage of any error or omission in these specifications, drawings and schedules. The Project Engineer will furnish all instructions should such error or omission be discovered and the Contractor shall carry out such instructions as if originally specified.

ARTICLE 55. PROTECTION FROM STORM

55.01 Should storm warnings be issued, the Contractor shall take every practicable precaution to minimize danger to persons, to the work and to adjacent property. These precautions shall include closing all openings; removing all loose materials, tools and/or equipment from exposed locations; and removing or securing scaffolding and other temporary work.

55.02 The Contractor shall provide measures to prevent stormwater runoff from entering excavation areas.

ARTICLE 56. PROTECTION OF WORK AND MATERIALS

56.01 The Contractor shall assume full responsibility for the protection of the work and materials during the progress of construction, and until final acceptance by the City, against loss or damage by any cause or agency. The Contractor shall, at his own expense, provide efficient means for such protection.

ARTICLE 57. FURTHER SAFEGUARDS

57.01 In case the City or the Project Engineer shall at any time be dissatisfied with the means provided by the Contractor for any aforesaid protection of the work or of any other properties, the City or the Project Engineer may order additional measures and precautions for that purpose. The Contractor, at his own expense, shall immediately comply with such orders and carry them out.

ARTICLE 58. FIRST AID TO INJURED

58.01 The Contractor shall keep on site, ready for immediate use, all articles necessary for giving first aid to injured employees. He shall also provide arrangements for the immediate removal and hospital treatment of any injured employee who may require such treatment.

ARTICLE 59. CONFORMANCE WITH DIRECTIONS

59.01 The Project Engineer may make alterations in the lines, grades, forms, dimensions or materials to be used in the project, or any part thereof, either before or after the commencement of construction. If such alterations diminish the quantity included in any item of work to be done and paid for at a unit price, the Contractor shall have no claim for damages or for anticipated profits on the work thus dispensed with. If the changes increase the quantity included in any such item, such increase shall be paid for at the stipulated unit price.

ARTICLE 60. COMPETENT HELP TO BE EMPLOYED

60.1 The Contractor shall employ an experienced foreman, craftsmen and other workmen competent in the work in which they are to be engaged. All work shall be accomplished by able, skilled and competent personnel. If any person employed on the work by the Contractor shall appear to be incompetent or unreliable in any way, he shall be discharged immediately upon the request of the Project Engineer and shall not be again employed upon the work.

ARTICLE 61. STREETS AND SIDEWALKS TO BE KEPT OPEN

61.01 The Contractor shall keep the street and sidewalks in which he may be working open at all times to pedestrian and vehicular traffic. If, in the opinion of the City or the Project Engineer, the interest of abutters and the public requires it, the Contractor shall bridge or construct plank crossings over trenches at street crossings, roads or private ways. The Contractor shall conduct his work for this project in such manner as the City or the Project Engineer may direct from time to time. No sidewalk shall be obstructed where it is possible to avoid it. No additional payment shall be made to the Contractor for such work.

61.02 The Contractor shall provide all necessary fire crossings at principal intersections or ways usually traveled by fire apparatus. The Contractor shall make provision for the passage of fire apparatus to the work area, including along the line of pipeline installations.

61.03 All work shall be conducted in such a manner as to create minimum interference with existing businesses and commercial establishments. Such establishments shall be allowed to conduct business at all times during the construction.

61.04 The Contractor shall be responsible for taking all steps necessary to minimize dust emanating from the project and for keeping the streets free of the accumulation of sand and other similar materials.

ARTICLE 62. LIGHTS, BARRIERS, FENCES, WATCHMEN AND INDEMNITY

62.01 The Contractor shall put up and maintain such barriers, fences, lighting, and warning lights, danger warning signals and signs as will prevent accidents during the construction. The Contractor will protect the work and will insure the safety of the personnel and of the public at all times and places. The Contractor shall defend, indemnify and save harmless the City its agents in every respect from any injury or damage whatsoever caused by any act, omission or neglect of the Contractor or his subcontractors, or their servants or agents. Such indemnification shall also include any claims arising out of failure to erect and maintain sufficient railing or fencing as required by Section 13a-111 of the Connecticut General Statutes. The fact that the City may retain control of the premises, or that the City, or its agents, may take action to erect or maintain railings or fencing shall not relieve the Contractor's obligations hereunder.

62.02 The Contractor shall furnish, maintain and use all necessary safety devices; follow all such safety practices in the prosecution of the work and shall adopt, follow and maintain such additional safety measures as, in the opinion of the Project Engineer, are conducive to safe operation by the Contractor. The Contractor shall cause his subcontractor(s) to also adopt, follow and maintain these measures. All of this shall be done at the Contractor's or subcontractor's own expense. The City shall have the right to order any or all work suspended where, in the opinion of the City, such work is not being carried on in a safe and proper manner or where persons or property are not being properly protected or safeguarded. Such work shall not be resumed until the City's requirements have been met and the City or Project Engineer has directed that work be resumed. Any

work so suspended shall be at the Contractor's expense.

62.03 In addition to the above, when as is necessary or when required by the City and/or the Project Engineer, the Contractor shall post signs and shall employ watchmen or flagmen for the direction of the traffic at the site and for excluding unauthorized persons from the site at all times. The Contractor will not be paid additional compensation for this work.

62.04 At all times the Contractor shall be responsible for excluding all persons from land within easement areas and all persons not directly connected with the work or authorized by the City and/or the Project Engineer to be within the project limits.

ARTICLE 63. WORK OUTSIDE REGULAR HOURS

63.01 Night work or work on Saturdays, Sundays or legal holidays requiring the presence of the City, Project Engineer or an Inspector will not be permissible except in the case of emergency and then only upon approval of the Project Engineer. Should it be desired or required for by the City or Project Engineer to operate an organization for continuous night work, the lighting, safety and other facilities that are deemed necessary for performing such night work shall be provided by the Contractor. For night work on Saturdays, Sundays or legal holidays, if any be performed, the Contractor will receive no extra payment. Compensation for such work shall be considered as having been included in the prices stipulated for the appropriate items of work as listed in the bid.

ARTICLE 64. BUS LINE INTERFERENCE

64.01 Whenever it may be necessary to interfere with any bus lines, notice shall be given to the corporation or agency owning the same. A reasonable amount of time shall be given to said organization in order to rearrange their schedule(s) as may be necessary.

ARTICLE 65. COLD WEATHER WORK

65.01 The Project Engineer will determine when low temperature conditions are unfavorable for work and may order the work, or any portions of it, suspended whenever, in his opinion, the conditions are not such as will insure first class work.

65.02 All methods and materials used in the performance and for the protection of the work in cold weather shall be subject to the approval of the Project Engineer. The Contractor shall take the necessary precautions to protect the work from damage and to remove ice and frost from materials. The removal shall include all necessary heating and the additional removal of any resultant water. The Contractor shall also supply any required sand and/or coarse aggregate required to prevent slipping on ice.

65.03 The Contractor shall be responsible for maintaining the project roads from the time of contract signing until final project acceptance by the City. This responsibility will include snow and ice removal, road sanding and mechanical sweeping, and roadway patching with materials approved by the Project Engineer.

65.04 The Contractor shall not continue road excavation after bituminous concrete plants have shut down for the winter. At that time, the Contractor shall request a "winter shutdown". The Contractor shall receive no extra payment for any labor, apparatus, tools or materials necessary to comply with the above requirements, but compensation shall be construed items of work as listed in the bid proposal/form.

ARTICLE 66. BLASTING AND EXPLOSIVES

66.01 No blasting shall be allowed without the Contractor's securing of a permit and permission from the office of the Waterbury Fire Marshall. The Marshall's office is located in the Waterbury City Hall, Telephone (203) 597-3452. The Marshall's office must be advised between 7:00 AM and 10:30 AM of each day's blasting schedule.

66.02 Explosives for blasting shall be stored, handled and used in accordance with the laws, ordinances and

regulations of the State of Connecticut; with all local regulations and with such other additional regulations as the Project Engineer may require. Blasting shall be conducted so as not to endanger persons or property. The Contractor shall be responsible for, and shall make good any damages of whatever nature caused by blasting or accidental explosions.

66.03 The Contractor shall also adhere to any additional conditions imposed by the Fire Marshall's office. Additionally, the Contractor shall have a pre-blast survey conducted of the adjacent area(s) at no cost to the City.

66.04 Steel or rubber matting shall be used at ALL blast sites where required by the Bureau of Fire Prevention. Any blast or shot involving more than 99 pounds of explosives must be monitored by the use of seismographs. All seismographs are at the expense of the Contractor. Wire and debris must be cleared from all areas.

ARTICLE 67. TUNNELING

67.01 Tunneling will not be permitted without the express written consent of the City.

ARTICLE 68. RESERVED MATERIALS/EXCAVATED MATERIALS

68.01 Materials excavated from trenches and excavations and those used in the construction of the work shall be deposited in such a manner so that they not endanger persons or the work. Materials shall also be deposited in such a manner that free access may be had at any time to all hydrants and gates near the work. The materials shall be kept trimmed-up so to be of as little inconvenience as possible to public travel or to adjoining tenants. All excavated materials not approved for backfill and/or fill; all surplus material; all rock and all boulders resulting from excavations shall be removed and satisfactorily disposed of off the site by the Contractor at no additional cost to the City.

68.02 Any excavated material not used in the installation of contracted items shall be removed from the site and legally disposed of by the contractor.

ARTICLE 69. OBSTRUCTIONS AND CROSSOVERS

69.01 Whenever any trench or other excavation obstructs pedestrian and/or vehicular traffic in or to any public street, private driveway or property entrance or to private property, the Contractor shall employ such means as may be necessary to maintain pedestrian and vehicular traffic and access. The Contractor shall construct and maintain suitable plank crossings and bridges to carry essential traffic in or. to the street, driveway or property in question as specified or as directed. These crossings shall be maintained for as long as it is not expedient to backfill the excavation or until such time as sufficient, supportive backfill may be placed. No additional payment will be made for this work.

ARTICLE 70. DIRECTIONAL SIGNS AND LIGHTS

70.01 Suitable signs, lights and such required items to direct traffic shall be furnished and maintained by the Contractor. No additional payment shall be made for this work.

ARTICLE 71. MAINTENANCE OF WORKPLACE

71.01 The Contractor must keep streets and premises free from unnecessary obstructions, debris and all other materials. The City or Project Engineer may, at any time, order all equipment, materials and surplus from excavations to be removed from the work area. Debris and all other materials lying outside of the working area shall be promptly removed. Should the Contractor fail to remove such material within 24 hours of notice to remove, the City or Project Engineer may cause any or all of said materials to be removed by others. The cost of this removal shall be deducted from any monies, which may be, or may become, due the Contractor under the Contract. In special cases, the City or Project Engineer may cause such materials to be removed without prior notice.

ARTICLE 72. OPERATIONS AT SEVERAL POINTS

72.01 The Contractor may carry on the work simultaneously at more than on point only if, in the opinion of the City or Project Engineer, such action is acceptable and is necessary to insure completion of the work within the specified time.

72.02 The Contractor‘s Construction Progress Schedule shall be adjusted to provide for work being simultaneously conducted at more than one point (location) at the site or sites.

ARTICLE 73. INTERFERENCE WITH EXISTING STRUCTURES

73.01 Whenever it may be necessary to cross or to interfere with existing culverts, drains, sewers, water pipes or fixtures, guard rails, fences, gas pipes or fixtures or other structures needing special care, due notice shall be given to the City or Project Engineer. Work involving these items shall be done according to the City’s or Project Engineer’s directions. Whenever required, all objects shall be strengthened to meet any additional stress that the work herein specified may impose upon it. Any damages that may occur shall be thoroughly repaired. If so directed by the City or Project Engineer, the location of any existing work shall be changed to meet the requirements of the proposed work, if necessary, to leave all in good working order. The entire work shall be the responsibility of the Contractor and the work shall be done at no additional expense to the City.

73.02 The Contractor shall be responsible for repairing all broken or damaged mains or utilities, property markers, monitoring wells, and other existing structures to remain, or outside the Limit of Work, during the progress of the Work. The Contractor shall repair and shall be responsible for all damages to existing utilities and structures with no additional expense to the City. The Contractor shall contact the proper utility or authority to correct or make any changes due to utility or other obstructions during the prosecution of the work, but the entire responsibility and expense shall be with the Contractor.

73.03 All damaged items of work or items required to be removed and replaced due to construction shall be replaced or repaired by the Contractor to the complete satisfaction of the City and/or utility at no additional expense to the City.

ARTICLE 74. TURF, TOPSOIL AND OTHER REPLACEMENT ITEMS

74.01 Where the construction runs through cultivated or sodded lands, the Contractor shall stockpile the turf and topsoil separately and replace the same after the excavation is filled. The Contractor shall leave the land as nearly as possible in its original condition. Trees, fences, walls, walks and other items must not be damaged.

ARTICLE 75. MATERIALS

75.01 All materials furnished and used in the completed work shall be new, of best quality, workmanship, and design and shall be recognized as standard in good construction practices. Whenever a specification number or reference is given, the subsequent amendments (if any) shall be included. The standards set forth in the selection of materials and supplies are intended to conform to those standards adopted by the City. Preference in manufacture shall be given to familiarize the Contractor with the requirements of the Project Engineer when the occasion or choice of materials or supplies so demands.

ARTICLE 76. DEFECTIVE MATERIALS

76.01 No materials shall be laid, installed or used which are known to be, or which may be found to be, in any way defective. Notice shall be given to the Project Engineer of any defective or imperfect material. Defective or unfit material found to have been laid, installed or used shall be removed and replaced by the Contractor with unobjectionable material. This removal and replacement shall be made without additional expense to the City.

ARTICLE 77. INSPECTION AND TESTING OF FURNISHED MATERIALS

77.01 Unless herein provided otherwise, all materials furnished by the Contractor are subject to thorough inspections and tests by the Project Engineer. Any materials condemned or rejected by the Project Engineer as not conforming to the specifications may be branded or otherwise marked. Branded or marked material shall be, on demand, at once removed by the Contractor to a satisfactory distance from the site. Removed materials shall not again be brought upon or near to the work.

ARTICLE 78. SAMPLES AND ORDERING LISTS

78.01 Unless herein provided otherwise, the Contractor shall submit samples of the various materials used on the contract as required by the specifications for testing purposes. All ordering lists shall be submitted by the Contractor to the Project Engineer for approval and must be approved before the ordering of the materials.

ARTICLE 79. SANITARY CONVENIENCES

79.01 Adequate sanitary conveniences, properly secluded from public observation, for the use of workmen on the premises shall be provided and maintained by the Contractor in accordance with the requirements of local and State health authorities. These conveniences shall be maintained in such manner and at such points as shall be approved and their use shall be strictly enforced. Sanitary waste shall be treated and disposed of in a manner satisfactory to, and as directed by, the City and/or the local and State health authorities. Under no circumstances shall sanitary waste be allowed to flow on the surface of the ground or in the work area.

79.02 The cost of sanitary conveniences and the maintenance of same will not be paid for separately, but compensation will be considered to be included in the prices stipulated for the items of work as listed in the bid form.

ARTICLE 80. FINISHING AND CLEANING UP

80.01 In completing any backfilling operation, the Contractor shall replace all surface material to the satisfaction of the City. The Contractor shall then immediately remove all surplus material, all tools, and other property belonging to him. The Contractor shall leave the entire street or surrounding area free and clean, in good order and at no additional expense to the City. Backfilling and removal of surplus materials shall follow closely upon the completion of the work. The Contractor shall exercise special care in keeping rights-of-way and private and public lands, upon which work is being performed, clean and free of debris at all times. The Contractor will remove tools and other property belonging to him when they are not being used.

80.02 In case the Contractor shall fail or neglect to promptly remove all surplus materials, tools and other incidentals after backfilling, or shall neglect to do required paving promptly, the City or Project Engineer may, after 24 hours notice, cause the work to be done and the cost thereof shall be deducted form any monies then or thereafter due the Contractor.

ARTICLE 81. RIGHTS OF ACCESS

81.01 Nothing herein contained or shown on the drawings shall be construed as giving the Contractor exclusive occupancy of the work area involved. The City or any other Contractor employed by the City, or entity identified in Article 82 below, or the various utility companies, contractors or sub-contractors employed by Federal, state or local government agencies involved in the general project or upon public rights-of-way, may enter upon or cross the area of work or occupy portions of it as directed or permitted. When the territory of one contract is the convenient means of access to the other, each contractor shall arrange his work in such manner as to permit such access and to prevent unnecessary delay in the work as a whole. Said access rights shall also include all Federal and state agencies and their representatives that have an interest in said project.

ARTICLE 82. WORK BY OTHERS

82.01 The City reserves the right to do any other work which may connect with, or become a part of, or be adjacent to the work embraced by this Contract, at any time, by contract work or otherwise. The Contractor shall not interfere with, nor obstruct in any way, the work of such other persons as the City may employ. In addition, the Contractor shall not interfere with, nor obstruct in any way, the following entities:

- City of Waterbury, owner of the Water Treatment Facility
- Veolia Water, the operator of the Water Treatment Facility

The Contractor shall execute his own work in such a manner as to aid in the execution of work by others as may be required. No excavations or backfilling will be permitted if other work by the City will be affected.

ARTICLE 83. WORK WITHIN THE LIMITS OF PRIVATE PROPERTY

83.01 Particular attention is hereby directed to the fact that some of the work included under this Contract may have to be done within the limits of properties that are publicly or privately owned. The City, where necessary has, or will have, secured the necessary easements to these properties for construction purposes. The Contractor will be permitted to utilize the areas of the City's easements, subject to all of the conditions and requirements as they may affect the Contractor's operations. The Contractor shall conduct his operations and activities in the performance of the work with all such conditions and requirements as may be imposed by the City or Project Engineer.

83.02 All means and rights of ingress and egress to the work areas and all other areas required for work space, in addition to the City's easements, shall be the entire responsibility of the Contractor, All costs in connection therewith shall be considered to be included in the prices stipulated for the appropriate items of work as listed in the bid form.

83.03 The Contractor shall neither use nor occupy public or private lands outside the limits of the City's easements and rights-of-way unless written permission from the owner of the public or private lands have first been obtained. Copies of the written agreements shall be submitted to the Project Engineer prior to entering upon such lands. The Contractor shall be responsible for cooperating with, and for coordinating the prosecution of, the work of this Contract with the public and private property owner. Any abuse to the lands of the public and private property owner shall be immediately corrected by the Contractor, at the Contractor's expense, to the complete satisfaction of the property owner. The Contractor shall take such precautionary measure, as required by the City, to prevent further nuisances, interference or inconvenience to abutting property owners.

83.04 It shall be the Contractor's full responsibility to be familiar with the limitations imposed upon the work of construction within the various properties of public or private ownership and rights-of-way by existing occupancy or use. The Contractor will be required to make every effort to fully and satisfactorily protect trees, shrubs, lawns, gardens, fences, walks, driveways, structures and all and any other appurtenances of the property owners.

83.05 The Contractor shall provide adequate access to all walks, driveways, yards or structures: shall protect all work by the erection or placement of safety guards or barriers, lights and such other incidentals; and where required, shall construct temporary plank crossings or timbers to permit full use of private facilities at all times. All of these actions are to be performed at no additional expense to the City. All other applicable provisions for control of work within the areas of public travel set forth elsewhere herein shall also apply to work within the limits of private ownership.

83.06 The Contractor shall cooperate with the public and private property owners and shall also contact the City and Project Engineer for additional information regarding the requested (or required) length of time needed as a notice to be given to the public or private property owner before the Contractor enters their property to start the construction. In some cases, a certain time to start the work and a certain limited length of time may be required to complete the work on public and private property owners. Furthermore the contactor may be required to

shutdown construction operations as necessary to prevent undo interference with the operation of private and public business within the project area.

83.07 Before proceeding with construction operations, the Contractor shall provide suitable and substantial gates or other approved forms of closing gap devices in every fence within the limits of the owner's easements through which the Contractor intends to move or pass equipment and materials. It is the responsibility of the Contractor to negotiate with the owner of each fence all of that owner's requirements, in addition to those specified above. It shall also be the responsibility of the Contractor to comply with all requirements as specified herein and as agreed to with the owner's in a manner satisfactory to the owner.

83.08 No separate payment will be made for the requirements specified under "WORK WITHIN THE LIMITS OF PRIVATE PROPERTY" and all cost in conjunction therewith shall be included in the prices stipulated for the appropriate items of work as listed in the bid form.

ARTICLE 84. LOADING

84.01 No part of the structures involved in this Contract shall be loaded during construction with a load greater than that calculated for the safety of the structure. Should any accidents or damage occur through any violation of this requirement, the Contractor will be held responsible. If necessary, the Contractor shall request, in writing, the allowable loading from the Project Engineer.

ARTICLE 85. COMPLETION OF WORK

85.01 In addition to the specified or described portions, all other work and all materials, equipment and labor of whatever description which are necessary or required to complete the work, or for carrying out the full intent of the drawings and specifications, as interpreted by the Project Engineer, shall be provided by the Contractor. Payment therefore shall be considered as having been included in the prices stipulated for the appropriate items of work as listed in the bid form.

ARTICLE 86. DUST AND SPILLAGE CONTROL

86.01 The Contractor shall exercise every precaution to prevent and to control dust arising out of all construction operations from becoming a nuisance. Water shall be provided and applied as required or as ordered by the Project Engineer for allaying dust conditions. Pavements adjoining excavations shall be kept swept and/or washed clean of excess excavated material wherever and whenever directed. Earth piles adjacent to excavations, earth stockpiles and surfaces of refilled excavations shall be kept moist at all times as directed. No extra payment will be made for providing the dust control measures and for conforming to the requirements specified above. Compensation therefor shall be considered included in the prices stipulated for the appropriate items of work as listed in the bid form.

ARTICLE 87. CARE OF THE WORK

87.01 The Contractor shall be responsible for all damages to persons or property that occur as a result of the Contractor's fault or negligence concerning the prosecution of the work. The Contractor shall also be responsible for the proper care and protection of all material delivered and of all work performed until completion and final acceptance, whether or not the same has been covered by partial payments authorized by the Project Engineer.

ARTICLE 88. EMERGENCY WORK

88.01 The Contractor shall file, with the City Engineer and the Project Engineer, if any, the name and telephone number of a person authorized by him who may be contacted regarding emergency work at the job site that may be required during non-working hours for reasons of public safety. This person shall be readily available and shall have full Authority to deal with any emergency that may occur.

ARTICLE 89. FIRE PREVENTION AND PROTECTION

89.01. All Federal laws (Occupational Safety and Health Act) and all state and municipal rules and regulations with respect to fire prevention, fire-resistant construction and fire protection shall be strictly adhered to by the Contractor. All work and facilities necessary therefore shall be provided and maintained by the Contractor in an approved manner.

89.02. All fire protection equipment (as per 89.01 above) shall be provided by the Contractor for the protection of the contract work including temporary work and adjacent property. Personnel experienced in the operation of the fire protection equipment and apparatus shall be available whenever work is in progress and at such other times as may be necessary for the safety of the public and of the work.

89.03. Open fires will not be permitted.

ARTICLE 90. PLANIMETER

90.01 For estimating quantities, where the computations of areas by analytic and geometric methods would be comparatively laborious, it is stipulated and agreed that the planimeter shall be considered an instrument of precision adapted to the measurement of such areas, as utilized by an engineer.

ARTICLE 91. SUPERINTENDENCE

91.01 During the entire duration of the project, the Contractor shall employ a competent English-speaking superintendent, as an employee of the Contractor, in personal charge of the work. The superintendent shall be present during all phases of construction and shall have full authority to act for the Contractor. The superintendent shall be continued in this capacity full time for this project unless (1) the person ceases to be on the Contractor's payroll or (2) the person proves to be unacceptable to the City or Project Engineer. Instructions given to the superintendent and/or supervisory subordinates shall be considered as given to the Contractor. A chain-of-command listing shall be submitted by the Contractor to the City and Project Engineer and shall be adhered to in the temporary absence of the superintendent.

ARTICLE 92. CONTRACT ADMINISTRATION COSTS - OUTSIDE REGULAR HOURS

92.01 The working schedule shall be confined to a five (5) day week ending on Friday. The working day shall be any eight-hour period beginning no earlier than 7:00 AM and ending no later than 4:00 PM. Whenever the Contractor elects to perform work on Saturdays, Sundays or legal holidays observed by the City or to work in excess of the normal working hours stated above, the Contractor shall pay to the City the extra cost incurred by the City due to the increased cost of contract administration. Payment shall include all cost of inspection and administration for such Saturday, Sunday or legal holiday work or for work in excess of the normal working day, which the City is obligated to incur and for the extra expense involved in overtime work resulting from the performance of work on these days.

92.02 No work outside regular hours or overtime work shall be planned or executed without the approval of the City.

ARTICLE 93. DAILY REPORTS

93.01 The Contractor shall submit daily activity reports on an approved form for the duration of the project. The report shall indicate all personnel currently employed on the work, including each trade and every sub-contractor; all equipment and whether that equipment was idle for the particular day; a general description of all work accomplished and any authorized extra work (time and material reports shall be submitted on separate forms).

ARTICLE 94. MATERIAL AND WORKMANSHIP

94.01 All materials and workmanship incorporated in the work covered by this Contract are to be of the highest grade of their respective kinds for the purpose intended. The Contractor shall furnish to the Project Engineer for approval the name of the manufacturer of machinery and mechanical or other equipment that the Contractor contemplates incorporating in the project together with their respective performance capacities and other pertinent information.

94.02 When required by the Specifications, or when called for by the City or Project Engineer, the Contractor shall furnish the required information for approval of all material that the Contractor contemplates incorporating in the work. Samples of material shall be submitted for approval to the Project Engineer when and as directed. Machinery, equipment and material installed or used without approval shall be at the risk of subsequent rejection.

ARTICLE 95. TEMPORARY WATER SUPPLY

95.01 In the event temporary water supply work is required, it shall be provided in accordance with the requirements of the Waterbury Water Bureau and all local and state health authorities. The Contractor shall provide and maintain facilities for an adequate supply of water suitable for use for construction purposes and for domestic use as required for the work of this Contract. The cost of all work, materials, equipment, appurtenances and accessories necessary for providing supplies of water at the site, including the cost of all water consumed, shall be borne by the Contractor.

95.02 Upon completion to the work of this Contract, and before final acceptance, the Contractor shall remove all temporary piping and appurtenant work used for the temporary water supply.

ARTICLE 96. FITTING AND COORDINATION OF WORK

96.01 The Contractor shall be responsible for the proper fitting of all work and for the coordination of operations of all trades, subcontractors or material suppliers engaged in the work. The Contractor shall be prepared to guarantee to each of his subcontractors the dimensions for which they may require for the fitting of their work to all surrounding work. The Contractor shall do, or shall cause his agents to do, all cutting, fitting, adjusting and patching necessary to make the several parts of the work come together satisfactorily and properly and to fit the work to receive, or to be received by, the work of other contractors.

ARTICLE 97. ARCHEOLOGICAL FINDS

97.01 Should the Contractor or Engineer discover evidence of remains, such as stone masonry building foundations, bones or other items of archaeological significance, Contractor shall report these findings to (1) Owner, (2) Local Historical Society, (3) State Historic Preservation Office (860) 256-2761, and (4) Resident Project Representative, and shall exercise the utmost care to ensure that these areas remain undisturbed. Contractor shall allow recovery of such finds by the authorities, shall not remove such artifacts under penalty of law, and shall prevent constriction or private vehicles from crossing over these areas. In addition, when directed by the Engineer, cover these areas with 1-ft common fill to the limits directed by the Engineer. Be advised that graves and any associated human remains are protected by Connecticut State law (C.G.S. Section 10-388 and 10-390). Any possible human skeletal remains must be reported to the State Archaeologist (860) 486- 5248 and the State's Chief Medical Examiner (860) 679-3980 immediately upon discovery. If the State Archaeologist is unavailable, please contact the State Historic Preservation Office at the number above for immediate assistance.

ARTICLE 98. EXCAVATIONS NEAR UNDERGROUND UTILITIES

98.01 In compliance with Public Act No. 77-350, "An Act Concerning Excavations Near Underground Utility Facilities," of the State of Connecticut, the Contractor shall not start any excavation and/or blasting of rock activity without first having ascertained the location of all such utilities in the area. The Contractor shall notify the Connecticut Underground Utilities Protection Authority (CUUPA) "CALL BEFORE YOU DIG" (Toll Free

1- 800-922-4455) at least two (2) full days in advance (excluding Saturday, Sunday and legal holidays), but no more than thirty (30) days before starting any such work. Such notice shall include the name, address and telephone number of the persons/agency performing the work, the date, location and type of excavation.

98.02 The CUUPA should immediately transmit such information to the utility companies whose facilities may be affected. Utility companies receiving notice should mark-up the locations of their facilities on the work site. If they have no facilities in the area, they shall so inform the Contractor. If the Contractor does not receive any information or marked-up locations on the work sites, the Contractor shall contact CUUPA again to verify that the utility companies have responded to the initial call. Under no circumstances will the Contractor be allowed to start any excavation and/or blasting work prior to obtaining all necessary information regarding the location of underground utilities at the site. It is the Contractor's responsibility to have all utilities marked on the work sites prior to starting the work.

ARTICLE 99. WATER QUALITY OF WELLS

99.01 The Contractor shall perform all tests required by the State Health Department on all water supply wells and reservoirs where directed by the City or Project Engineer before and after construction. All labor, materials and testing shall be paid by the Contractor at no cost to the City.

ARTICLE 100. WORK IN STATE HIGHWAYS

100.01 If any of the work under this Contract is in a state highway the Contractor shall obtain all required permits at his own expense. The Contractor shall perform the work in accordance with the terms and conditions stipulated by the Connecticut Department of Transportation (ConnDOT) and/or as required by ConnDOT inspectors. The Contractor must provide such bonds, security and insurance as may be required to obtain such permits.

100.02 In the event the City, or the City and the Contractor jointly, are required to obtain any permits, including detour permits, the Contractor shall be familiar with the conditions of the permits and shall be held responsible for compliance with all the requirements of the permits and all specifications attached thereto, as if the permits were held solely by the Contractor.

100.03 Whenever State inspectors, flagmen or other costs are incurred as a condition to obtaining permits, the Contractor shall be responsible for payment of these costs with no reimbursement from the City.

100.04 The Contractor shall conform to all ConnDOT requirements for materials and construction methods for all work within state highways. Sheeting or an adequate trench box may be required in all trenching operations to confine trench widths and to protect State facilities. Additional pavement replacement may be required to properly restore the roadway surface.

100.05 The cost of all labor, materials and equipment necessary to conform to CONNDOT requirements for work in, or adjacent to, state highways, including work not specifically stated in the Contract Plans and Specifications, shall be the sole responsibility of the Contractor and shall not be reimbursed by the City. Therefore, the Contractor is informed to evaluate all CONNDOT requirements for the project prior to submitting the Bid for the project and to include these costs in his bid prices.

ARTICLE 101. EXISTING INSPECTION REPORTS

101.01 Any existing inspection reports concerning the project which have been prepared by or for the City or Project Engineer will be made available for the Contractor's information.

ARTICLE 102. TEST REPORTS; CERTIFICATES OF COMPLIANCE AND SHIPPING LISTS

102.01 In addition to other requirements specified herein, the Contractor shall furnish to the Project Engineer the material manufacturer's notarized test reports and methods of testing by an approved independent laboratory in order to show compliance of all materials furnished with all specification requirements, the reports shall also contain manufacturer's notarized certificates of conformance stating that all materials furnished under these Specifications conform with all specification requirements; that each shipment of materials shall be accompanied by the manufacturer's notarized certificate of conformance and that a shipping list itemizing the amounts of each shipment shall accompany each shipment. All testing of materials furnished under these Specifications shall be provided by the Contractor at no additional expense to the City.

ARTICLE 103. CLEANING FINISHED WORK

103.01 After the work is completed, the sewers, manholes ands structures shall be carefully cleaned free of dirt, broken masonry, mortar, construction and other debris and shall be left in first class condition, ready for use. All temporary or excess material shall be disposed of and the work left broom-clean to the satisfaction of the Project Engineer.

ARTICLE 104. THIS SECTION INTENTIONALLY OMITTED

ARTICLE 105. COMPLIANCE TO ACTS AND EXECUTIVE ORDERS

105.01 If this Contract is Federally assisted and the Contractor must comply with all applicable statutes, acts, executive orders and regulations, including without limitation:

(a) **TITLE VI, CIVIL RIGHTS ACT OF 1964** Provides that no person in the United States shall on the grounds of race, color or national origin be excluded from participation in, be denied the benefits of, or be subjected to discrimination under any program or activity, receiving Federal financial assistance.

(b) **SECTION 3, HUD ACT OF 1968** Provides that, to the greatest extent feasible, opportunities for training and employment shall be given to lower income residents of HUD-assisted project areas, and that contracts for work in connection with such projects be awarded to business concerns which are located in, or are owned in substantial part by persons residing in the area of the project.

(c) **LABOR STANDARDS** Compliance with Davis Bacon Act, as amended (40 U.S.C. 267a-5) Contract Work Hours and Safety Standards Act (40 U.S.C. 327-333) 13.0.

ARTICLE 106. SEMI-FINAL INSPECTION

106.01 Upon completion of all the work as required by the plans and specification the Contractor shall submit an Affidavit of Substantial Completion and shall request a semi final inspection of the work by the Project Engineer. Based on the semi-final inspection the Project Engineer will provide the Contractor with a list of items of work which have not been completed by the Contractor in accordance with the plans and specifications. The Contractor shall complete all work and/or correct all deficiencies identified during the semi final inspection.

ARTICLE 107. CERTIFICATE OF FINAL COMPLETION

107.01 Upon completion of all work required by the plans and specifications and the work identified the Project Engineer shall issue a CERTIFICATE OF FINAL COMPLETION.

ARTICLE 108. FINAL ESTIMATE

108.01 Upon the completion of the required work as required by the Contract Documents, the Engineer shall prepare a FINAL ESTIMATE showing the final estimate of quantities. Should the final estimate of quantities show either an increase or decrease from the approximate estimate of quantities, then such variations will be computed at the unit prices bid and reflected in the Final Estimate by adding or deducting said amounts from the gross sum bid. All certificates of payments and estimates, upon which partial payments may have been made being merely estimates, shall be subject to correction in the FINAL ESTIMATE.

108.02 The FINAL ESTIMATE shall state the final contract amount, any liquidated damage amounts, all City payments to Contractor, retainage to be released to Contractor and final amount of any holdback(s) by the City, plus any other credits from Contractor to the City.

108.03 The FINAL ESTIMATE shall be signed by the Contractor and by the Engineer.

ARTICLE 109. CERTIFICATION OF FINAL PAYMENT

109.01 Based on amounts set forth in the FINAL ESTIMATE, the Contractor shall prepare and submit its Final Payment Application.

109.02 FINAL PAYMENT to the Contractor shall be based on City's Certification of Contractor's Final Payment Application.

ARTICLE 110. FINAL ACCEPTANCE OF PROJECT CERTIFICATE OF PAYMENT

110.01 FINAL ACCEPTANCE of the Project shall occur when:

(a) all Project work has been completed to the satisfaction of the City and the following have been submitted to the satisfaction of the Engineer:

i. All documentation and supporting information required by the Contract Documents;

ii. Reports and forms required on all Federal Aid Projects;

iii. Warranties, guaranties, final operation and maintenance manuals, and documentation to the effect that training and start-up support required by the Contract have been completed;

iv. After final inspection has been held, all required additional work and final cleaning-up have been completed, and all of the Contractor's equipment and construction signs have been removed from the Project site;

(b) City has issued FINAL PAYMENT to the Contractor, and

(c) Upon delivery to Contractor by City of written notice of FINAL ACCEPTANCE of the Project.

ARTICLE 111. ACCEPTANCE OF FINAL PAYMENT

111.01 The acceptance by the Contractor, or by anyone claiming by or through him, of FINAL PAYMENT shall constitute and operate as a release for the City from any and all claims of any liability to the Contractor for anything, theretofore done or furnished for or relating to or arising out of the Work done there under, and for any prior act of neglect, default on the part of the City or any of its officers, agents, or employees unless the Contactor serves a detailed and verified statement of claim upon the City not later than 40 days after mailing of such final payment. Such statement shall specify the items. Should the Contractor refuse to accept the final payment as tendered, it shall constitute a waiver of any right of interest thereon.

END OF SECTION

WATERBURY
DEVELOPMENT CORPORATION

Date: October 8, 2026

To: Michael DiGiovancarlo
President, Board of Aldermen

Members, Board of Aldermen

Mayor Paul Pernerewski

From: Zach Keith
Economic Development and Grants Manager

Subject: State of Connecticut Department of Energy and Environmental Protection Urban Green & Community Garden Grant Application - Curtin Park Renovation Project

Dear Honorable Members of the Board of Aldermen,

I request approval to apply for the State of Connecticut Department of Energy and Environmental Protection's Urban Green & Community Garden Grant for the renovation of Curtin Park.

In 1973 the City of Waterbury purchased the property on which Curtin Park is located. In 1974 the City constructed a park, naming it in honor of long time Parks Department Superintendent James Curtin. The park was originally designed with a playground, basketball courts, tennis courts, and a baseball field that could be flooded during winter months for ice skating.

The park, however, is in great need for improvements:

The park has overgrown trees and vegetation throughout which does not provide a welcoming entrance. The park's most recent improvement was a splash pad in constructed in 2018. The balance of the park has not seen investment in many years. The tennis courts currently have trees growing through the asphalt surfaces, the basketball courts need to be resurfaced, the baseball field needs to be renovated, as well as, the playground area.

Waterbury Development Corporation (WDC) believes that through pruning and removal of overgrown vegetation the park will become more welcoming and provide an additional amenity with the addition of a walking path around the park. WDC proposes that the tennis courts would be removed and replaced with a grass field. The swings and surfacing at the playground will be replaced.

In addition, there is currently a growing interest in soccer and therefore WDC proposed incorporating soccer goals at the baseball field. The limited lighting and park signage at both entrances to the park will be replaced. New trash cans and benches will also be added to the park.

Curtin Park, is located at 84 Springbrook Road, a short walk from 167 Springbrook Road where the Waterbury Housing Authority operated a HUD complex housing 56 families and 110 children The park's southern boundary is at the edge of the new 3.2 million square foot Amazon distribution center scheduled for completion summer 2027. Lastly, the park is a half-mile walk from one of Waterbury's K-8 John G. Gilmartin School.

At this time, the estimated costs for this Project is $1,099,855.68. This CT DEEP Grant requires in general a 50% match. This grant program will not fund active park features, such as work to the swings, baseball field, or basketball courts. However, the program has the flexibility to consider, at DEEP's discretion, non-eligible project costs as contributing to the match component of the grant. If awarded this grant, it is anticipated that the grant portion will be $547,896.34 and the City's match will be $551,959.34 and would come from Local Capital Improvement Funds.

Please find attached referenced Grant Application. This will be updated with the below resolution and the corresponding Project Authorization Letter that will be included with the final Grant Application. In addition, CT DEEP has requested the following resolution be approved:

RESOLUTION:

Be it resolved that WDC staff is authorized to prepare an application for the CT DEEP Urban Green and Community Garden Grant Program for the Curtin Park Renovation Project and to submit the grant application electronically to CT DEEP on behalf of the City of Waterbury. Should this grant be awarded to the City of Waterbury, the necessary grant agreement would be presented to the City of Waterbury Board of Aldermen for consideration.

WDC staff will be present at your meeting for any questions the Board may have.

Connecticut
Department of Energy & Environmental Protection

OFFICE OF THE COMMISSIONER
LAND ACQUISITION & MANAGEMENT UNIT

Application Form: DEEP Urban Green & Community Garden Grant Program
Due: Friday, December 4, 2026

Please complete this form and include it in an application package with supporting materials for submission to DEEP. Directions for submitting your complete application package are found at Section XI at the end of this Form.
Your application package will be used to evaluate and score the proposed project for grant funding. Narrative responses should be on a separate document and clearly indicate the application section being addressed. Responses to the items on this form should be brief, factual, accurate, and relate directly to the grant program eligibility and statutory requirements, standards, and criteria. Project proposals that do not meet program eligibility, or applications which are found insufficient due to missing and/or inaccurate information, will not be evaluated and may be rejected by DEEP from further review or penalized by requiring any awarded funding surrendered.

Section I. APPLICANT & PROJECT INFORMATION

Project Name:	Curtin Park Renovation		
Project Total Cost:	$1,099,855.68	**Grant Funding Amount Requested:**	$547,896.34
Project Town:	Waterbury		
Project Address(es):	84 Spring Brook Road		

Applicant Name:	City of Waterbury		
Applicant Address:	235 Grand Street	**Applicant FEIN #:**	06-6001900
Municipal CEO Name (Municipal Applicants):	Paul K Pernerewski Jr	**Title:**	Mayor
Organization Head or Signatory Authority (Nonprofit Applicants):	James Nardozzi	**Title:**	Executive Director
Application Preparer Name:	Zachary Keith	**Title:**	Economic Development & Grants Manager
Contact Email:	keith@wdconline.org	**Contact Phone:**	203-346-2607 ex 7287

Section II. ELIGIBILITY

1. Project will take place in a Distressed Municipality (§32-9p) Targeted Investment Community (§32-70), within or adjacent to a Environmental Justice Community census block (§ 22-20a).	■ Yes ☐ No
2. Project will take place on land acquired by eminent domain. *If "**yes**", the application will not be evaluated for award.*	☐ Yes ☐ No
3. Project will take place on land owned by a Municipality.	■ Yes ☐ No
4. Project will take place on land owned by a Non-profit Organization registered with the Connecticut Secretary of the State.	☐ Yes ☐ No
5. Applicant is a municipality with a Plan of Conservation & Development less than 10 years old or has been granted a waiver by the Office of Policy and Management. *If "**no**", the application will not be evaluated for award per Public Act 24-132.*	■ Yes ☐ No
6. Applicant is a Non-profit Organization Registered with the Connecticut Secretary of the State. *If "**yes**," be sure to include as part of application the REQUIRED SUPPORTING MATERIALS listed below.*	☐ Yes ☐ No
7. Applicant is a Municipality working with a Non-profit "Co-Sponsor" who will manage a project on Municipal owned land. *If "**yes**," be sure to include as part of application the REQUIRED SUPPORTING MATERIALS listed below.*	☐ Yes ☐ No
8. Applicant has funding or expense sources available to meet required 50% match share of total project cost.	☐ Yes ☐ No
9. Project will create, enhance, or restore a community green space in an Environmental Justice Community, Targeted Investment Community or Distressed Municipality.	☐ Yes ☐ No
10. Project will be open and accessible to the public. *If public access is not clearly shown, the project will not be evaluated for an award.*	☐ Yes ☐ No
11. Grant funding will not be for intensive recreational and/or commercial uses. (*i.e., athletic turf fields, indoor facility, washing facility, splash pad, swimming pool, dog park, playground, etc.*).	☐ Yes ☐ No
12. Grant award expenses will not be used for administrative, carrying, and non-programmatic costs. *(i.e., salaries, organizational liability insurance, etc.).*	☐ Yes ☐ No

Required Supporting Materials for Non-Profit Organizations:

■ **Attachment A**	Current IRS 501(c)(3) Determination Letter as evidence the Non-profit Organization is a duly authorized 501(c)(3).
■ **Attachment B**	Copy of Certificate of Legal Existence from the Secretary of State evidencing the Non-profit is registered with the Secretary of the State's Office.
■ **Attachment C**	Copy of Charitable Solicitation Registration with the Department of Consumer Protection as evidence the Non-profit Organization is verified as active.
■ **Attachment D**	For projects to be managed by a Non-profit Organization at Municipal owned land: Copy of Letter of Approval signed by Municipal CEO or governing legislative body supporting the Co-sponsored project.
■ **Attachment E**	For projects to be managed by a Non-profit Organization at Municipal-owned land: Copy of project management agreement drafted or fully signed by the Municipal CEO.

Section III. PROJECT DESCRIPTION

Considering the eligibility requirements, standards, and criteria outlined in Section II, prepare a description of the project proposal, including responses to the following:

1. Site Location, Use, & Environmental Justice Communities	Describe the location of the site and its current, and historical – if known - uses. If the site is within or adjacent to an Environmental Justice Community (§ 22a-20a) that is not also within a Distressed Municipality or Targeted Investment Community, provide a screenshot of the site's location as shown on DEEP's Environmental Justice Communities Map. Steps for saving a screenshot are as follows: (1) Go to DEEP's Environmental Justice Communities Map. (2) Type property address into the top-left search box. Press "enter" to zoom to address. (3) Right-click on screen. (4) Select "Print…" (5) Save screenshot as Adobe PDF to your computer.
2. Site Use & Public Access	Describe what types of activities will be offered at the site and by the project, how it will be opened to the general public, and if public events and community gatherings will be permitted. If fees will be charged, you must describe the fee structure and how funds will be managed.
3. Plan Design & Construction	Describe: - How the site is presently used, existing physical conditions, and the proposed new work to be performed. - Whether a landscape architect, design engineer, or other professional consultant is being engaged to help plan the project. - Who will perform the work (e.g., Municipal Department of Public Works, Parks & Rec Department, Commission, or volunteers). - Whether there is an identified co-sponsor that will act as project manager and describe their exact role. - Where the DEEP funding acknowledge signage will be placed and how the site will be advertised as open to the public.
4. ADA Accessibility	Describe how ADA and other disability-related standards and codes will be integrated into the design, physical landscape and structural components of the project (i.e. parking, gates, viewing platforms, trails, etc.):
5. Timeframe for Completion	Describe how the proposal will be completed within 5 years.

Required Supporting Materials:

☐ **Attachment F**	General Location Map
☐ **Attachment G**	Screenshot of Site Location as Shown on DEEP's Environmental Justice Communities Map (if applicable)
☐ **Attachment H**	Property Boundary Survey (if available)
☐ **Attachment I**	Site Existing AND Proposed Conditions Plan Set
☐ **Attachment J**	General Public Access Map (Access points, parking areas, etc.)

Section IV. SITE OWNERSHIP

Provide deed verification that the site at which the project will take place is owned in fee title by a Municipality or Non-profit Organization and is free from liens or encumbrances which would prohibit public access or prevent its use as a community garden or passive recreational green space. If the site where the project would take place prohibits public access, then the project will not be evaluated for a grant award.

Required Supporting Materials:

☒ **Attachment K**	Complete Copy of Property Deed

Section V: Brownfields

Per C.G.S Section 32-760, "Brownfield" means any abandoned or underutilized site where redevelopment, reuse or expansion has not occurred due to the presence or potential presence of pollution in the buildings, soil or groundwater that requires investigation or remediation before or in conjunction with the redevelopment, reuse or expansion of the property.

The Urban Green & Community Garden Grant Program supports the creation or expansion of community greenspaces on remediated or nearly remediated brownfield sites. Eligibility is restricted to sites where remediation is complete or will be completed in a reasonable amount of time after submission of this grant application. Projects must meet the eligibility criteria noted in Section II. Sites subject to Environmental Use Restrictions incompatible with a publicly accessible greenspace will not be considered for funding.

1. Project area overlaps with an existing or previously identified brownfield site. ***If "No" skip to Section VI.***	☐Yes ☒ No
2. Project area is fully remediated *If "**No**", when are remedial activities expected to be complete?*	☐Yes ☐ No Estimated Completion Date:

Applicants proposing a project on a former or existing brownfield site must submit documentation that evidences, to the satisfaction of DEEP staff, that remediation is complete or will be completed by the date indicated above.

Required Supporting Materials if a brownfield project:

☐ **Attachment L**	Narrative describing prior assessment and remedial activities and any use restrictions on the site.
☐ **Attachment M**	Final Verification Form, No Audit Letter, or other documentation supporting the indicated status of remedial activity.

Section VI. COMMUNITY NEED & LETTERS OF SUPPORT

Applicants must demonstrate through letters of support that they performed local public outreach and received meaningful community input on proposed project need and design. Letters of support may come from community organizations, municipal boards and departments, state legislators, and Regional Councils of Government. Describe the local and public interest expressed for the project and how the public and local community organizations have been involved in the planning and design processes. Describe what the project will accomplish and how it benefits the community, including why a public community garden or passive recreational green space would be a welcomed addition to the area:

- What other recreational opportunities are available within proximity?
- What major population center(s) and neighborhood(s) are within the project service area?
- What is the municipal population density and census tract?

Explain whether the project has municipal board and commission support (e.g., Board of Selectmen or Town Council, Board of Education, Department of Planning & Zoning, Department of Public Works, Department of Parks/Recreation, Agriculture Commission, Conservation/Open Space Commission, Inland Wetlands/Watercourses Agency), including how and when the decision to undertake the project was made.

Supporting Materials:
Letters of support should be formal letters on the authoring entity's letterhead (where applicable). They should address their specific support for the applicant and the project named in the UGCG application.

Letters from at least <u>two</u> of the following three categories must be provided:

☐ **Attachment N**	Municipal Support Letters (*e.g., Board of Selectmen or Town Council, Board of Education, Department of Planning & Zoning, Department of Public Works, Department of Parks/Recreation, Agriculture Commission, Conservation/Open Space Commission, Inland Wetlands/Watercourses Agency*)
☐ **Attachment O**	Regional Council of Government (RCOG) or Planning Agency (RPA) Support Letters
☐ **Attachment P**	Community Organization Support Letters

Section VII. OPERATION, MAINTENANCE, & STEWARDSHIP CAPABILITY

Describe how the project work will be managed and how the project area will be stewarded and maintained going forward. If there is an identified co-sponsor project manager describe the organization's role and the experience and positions of the personnel to be involved.

Required Supporting Materials:

☐ **Attachment Q**	Complete copy of a project management agreement, or other documentation signed by the Municipality and its Co-Sponsor (if applicable)

Section VIII. FUNDING MECHANISMS & BUDGET NARRATIVE

This is a matching grant program covering 50% of the total project cost. This program accepts in-kind contributions (e.g., staff/volunteer time and donated materials). Describe the necessary expenditures to be incurred by the proposal, how much funding is being requested from DEEP, and how the required 50% match will be met, including responses to the following:

1. Total Project Cost	- Provide the total project cost and explain expenditures to be incurred towards completing the proposal.
2. Matching Sources	- Document the source of matching funds to complete the project. - Disclose all other private, State, and/or Federal Government funding sources including other grants you are applying for.
3. Budget Table	Clearly show total cost and line-item units and unit costs, DEEP grant funding being requested, and sources of 50 percent match. In developing a table, please refer to Frequently Asked Questions for eligible expenses which may be reimbursed by DEEP under this program.

Required Supporting Materials:

☒ **Attachment R**	Budget Table
☒ **Attachment S**	For Municipal Applicants: Municipal Resolution Certified by Town or City Clerk stating municipal authorization for expenditure of funds and that the municipal CEO may enter into a grant contract agreement with DEEP. Resolutions should include incumbency statement identifying the municipal CEO signatory's duration of service.
☐ **Attachment T**	For Non-profit Organization Applicants: Corporate Resolution certified by Corporate Secretary or keeper of the records indicating that the President of the Non-profit Organization can sign and enter into grant documents.

**** APPLICANTS BE AWARE: Reimbursable project costs cannot be incurred prior to a fully executed contract agreement between the applicant and CT DEEP. Costs incurred before contract completion can be eligible (with the approval of DEEP program Staff) as Matching Sources but will not be reimbursed by the UGCG grant award.****

Section IX. CONSISTENCY WITH PLANS OF RECREATION, CONSERVATION & DEVELOPMENT

Citing sections or chapters of such plans, briefly explain how the project proposal is consistent with the municipality's adopted Plan of Conservation and Development and/or public recreational plans, any applicable regional plans of recreation, conservation and development, or other relevant State resource Plans.

Required Supporting Materials:
Excerpts to satisfy Attachment U and V are required.

☒ **Attachment U**	Excerpts from Local Plan of Conservation & Development which is Less than 10 Years Old
☒ **Attachment V**	Excerpts from Regional Plans of recreation, conservation and development which are less than 10 years old and/or other relevant State plans

Section X. PAST GRANT COMPLIANCE

1. Has the applicant received any UGCG grant awards in the past?
   ☐ Yes ☐ No

If "yes," please provide the following information for each past awarded project:

(a) UGCG Grant Number;
(b) Project Name;
(c) Whether the project was completed within the 5-year grant contract active period;
(d) Grant award balance remaining (if any);
(e) Status update, including whether the site is no longer being operated or maintained for the original project purpose(s).
(f) If the project site is no longer being used, please explain why.

If previous UGCG grants are not fully compliant, provide a narrative explanation for why, as well as a detailed timeline for the applicant to regain compliant status.

Additionally, applicants must provide proof of submission of a State Single Audit or Exemption Form (whichever is appropriate) for the preceding 3 years.

Required Supporting Materials:

☐ **Attachment W**	Three (3) color, clearly-lit photographs in JPEG format of each past UGCG awarded project sites in their existing current state of condition.
☐ **Attachment X**	One (1) color, clearly-lit photograph of the required sign or plaque recognizing State funding at each past UGCG awarded project sites in its existing current state of condition.
☐ **Attachment Y**	Proof of submission of State Single Audit or Exemption Form for preceding 3 years

Section XI. Submission of Application

Submit via email to Cameron.Clegg@ct.gov the complete application package consisting of:

- This Application Form; and
- A separate document containing compiled responses to Sections III through X of this Application Form; and
- All required supporting material Attachments A through Y, with attachments clearly indicated in the document name.
- Please submit this application, the compiled responses, and all attachments as separate, clearly labeled documents for ease of review.
    - Document name format: *Applicant Name*_UGCG 2026_*Document Name*
    - Send across multiple emails as necessary, or
    - Email a link and access to a data sharing site (OneDrive, Sharepoint, Dropbox, etc.)

Section II Eligibility:

The project is located within a distressed municipality and an environmental justice block on land owned by the City of Waterbury. The City of Waterbury is applying for this grant application with Waterbury Development Corporation. Waterbury Development Corporation will manage the project on behalf of the City of Waterbury pursuant to a Project Authorization Letter which is subject to the Master Municipal Agreement between the City of Waterbury and the Waterbury Development Corporation. Supporting this section of the application are attachments A, B, D, and E.

Section III Project Description:

1. Site Location, Use, and Environmental Justice Communities: Describe the location of the Site and its current and historical known uses:

Curtin Park is located at 84 Spring Brook Road Waterbury CT 06706 located in a distressed municipality and environmental justice community. The City of Waterbury is the fifth largest city in the State. Waterbury has approximately 115,000 residents and 45,663 households. The median income for a household in the City is $51,886. Curtin Park is located is census tract 3515 and is zoned RL.

The park is located within the Gilmartin Neighborhood. The City of Waterbury purchased the property for $57,326.30 on March 21, 1973. The park was constructed in 1974 and named in honor of long time Parks Superintendent James Curtin. The park was originally designed with a baseball field that could be flooded for skating, basketball courts, tennis courts, and a playground. The parks southern boundary is the edge of the new Amazon Distribution Center, as well as, a City of Waterbury Housing Authority complex, the other three borders of the property are all residential.

Directly south of the park is the Amazon warehouse which is currently under construction and slated to open in June 2027. The new Amazon warehouse will be 3.2 million square feet and bring an estimated 1,000 jobs. In addition, within a half a mile walk from the park is John G Gilmartin K-8 School which was built in 2010. The Waterbury Housing Authority owns a large multi-family complex at the end of Spring Brook Road, the area around the park is all residential. This park has a great need for improvements.

2. Site Use and Public Access: Describe what type of activities will be offered at the site and by the project, how it will be opened to the general public, and if public events and community gatherings will be permitted. If fees will be charged, you must describe the fee structure and how funds will be managed.

   The property has been a public park since 1974 and will continue to be open and free of charge to the public as it has always been.

3. Plan Design and Construction:
   - Describe how is the site presently used, existing physical conditions, and the proposed new work to be performed.

   The park is and has been a public park since 1974. The park has overgrown trees and vegetation throughout which does not provide a welcoming entrance. The park's most recent improvement was its splash pad in 2018. The balance of the park has not seen investment in many years. The

tennis courts currently have trees growing through the surfaces, the basketball courts need to be resurfaced, the baseball field needs to be renovated, as well as, the playground area. The park also has a great need for tree and vegetation clearing throughout which will help make the park more welcoming through the addition of a walking path around the park which will add another amenity for the neighbors. The tennis courts will be removed and replaced with open grass field. The swings and surfacing at the playground will be replaced. In addition, there is currently a growing demand for soccer fields in Waterbury partially due to the growing Hispanic population in the City, therefore we will add soccer goals at the baseball field. The limited lighting and park signage at both entrances to the park will be replaced. Trash cans and benches will also be added back to the park as currently there are none.

- Whether a landscape architect, design engineer, or other professional consultant is being engaged to help plan the project.

If awarded the grant, WDC on behalf of the City of Waterbury will issue a public competitive Request for Proposals for an Architect/Engineer to design the plans and specifications for the Curtin Park renovations. The WDC/City will review the proposals received and will award to the most qualified candidate with the best pricing.

- Who will perform the work (e.g. municipal Department of Public Works, Parks and Recreation Department, Commission or volunteers)?

Once the drawings and specifications are completed a public competitive bid for a contractor will be advertised for the park renovations. WDC shall comply with all State of Connecticut public competitive bidding requirements.

- Whether there is an identified cosponsor that will act as a project manager and describe their exact role.

  Waterbury Development Corporation through a Project Authorization Letter, which is subject to a Master Municipal Agreement, will manage the project design and construction on behalf of the City.

- Where the DEEP funding signage acknowledge will be placed and how the site will be advertised as open to the public.

  During Construction the CT DEEP signage will be placed in the park facing Spring Brook Road allowing the public to easily see the funding partners.

4. ADA Accessibility: Describe how ADA and other disability-related standards and codes will be integrated into the design, physical landscape, and structural components of the project (i.e. parking, gates, viewing platforms, trails, etc.):

   As part of the project an ADA compliant walking trail will be installed around the Park. The park is within an urban community and the gates at either end will be replaced; there are no viewing platforms. There are no restricted areas of the park as it is a public park.

5. Timeframe for Completion: describe how the project will be completed within 5 years:

   Upon award of the grant, the WDC will advertise for an architect/engineer to prepare drawings and bid specifications for the work outlined above. Following completion of the drawings and bid specifications, the WDC will advertise a public competitive bid for a contractor to perform the scope of work identified. It is the intent of WDC to fully complete this project within two years.

For support of section III please find attached to this application: attachments F, G, H, I, and J.

Section IV Site Ownership:

As proof of site ownership for attachment K, please find attached the property card and City of Waterbury land volume 1082 page 254.

Section VI Community Need and Letters of Support:

WDC has received several letters of support, from various nonprofits, the NVCOG, The Waterbury Housing Authority, Gilmartin Neighborhood Association, Waterbury Park's Board, and the City Planner which are attached to the grant application. These letters of support are found in attachments N, O, and P.

The community supports the renovation to Curtin Park as the park is in need of renovations for public safety and continued use. These renovations will benefit these organizations and the City at large. The decision was made to undertake this project to help improve the neighborhood and this grant is necessary to be able to complete the project. As an architect/engineer is not under contract at this time public involvement will be completed during the design phase.

Section VII Operations, Maintenance, and Stewardship Capability:

Since 1951, WDC has been the designated economic agency for the City of Waterbury. The Project will be managed by Waterbury Development Corporation on behalf of the City of Waterbury through a Project Authorization Letter (attached as Attachment Q) which is subject to a Master Municipal Agreement (attached as attachment Q). The Waterbury Development Corporation has managed several park renovation projects over the years including: The Green, Library Park, Fulton Park Pool, Hamilton Park Pool and Promenade, Washington Park Pool; as well as, the creation of two new parks in the City: 909 Bank Street and 313 Mill Street. Following completion of the project, the Waterbury Parks Department, which maintains all of the public parks in the City, will continue to maintain the Curtin park as it has since 1974.

Section VIII Funding Mechanism and Budget Narrative:

The Curtin Park Renovation Project is estimated to cost $1,099,855.68 of which the grant match is $547,896.34 and the City will be contributing $551,959.34. This cost estimate includes the design and engineering of the renovation, the renovations itself as further described in Appendix A Scope of Work and the Attachment R Curtin Park Renovation Project Budget Table. The City's portion is anticipated to

come from fiscal year 28 local capital improvement, available July 1, 2027. Please also find attached as support, Attachment S-Municipal Resolution certified by the City Clerk.

Section IX Consistency with Plans of Recreation, Conservation, and Development:

According to the Adopted Plan of Conservation and Development (2026-2036), the City's Bureau of Park's and Golf Courses, under the Department of Public Works manages nearly 1,100 acres of municipally owned land of which 643 acres was for public parks with the rest being for golf courses. Since 2016, 909 Bank Street Park and 313 Mill Street Park have been created. On page 53 of the Plan of Conservation and Development there are five goals listed for maintaining and improving the Public Parks System which include: 1. Continue to complete upgrades to Hamilton Park using a phased approach. 2. Rehabilitate and maintain existing parks, playgrounds, recreation centers, and golf courses. 3. Continue to make accessibility improvements to City parks and playgrounds to ensure that they are accessible to all. 4. Continue to plan for the future Jackson Street Park as part of the redevelopment efforts in the Freight Street District. And 5. As part of the Greenway planning and design efforts, incorporate river access and pocket parks into the greenway system, where feasible.

In applying for this funding to renovate Curtin Park, it is consistent with the Plan of Conservation and Development calling for the renovation and maintenance of the City's Parks. Please see Attachment U-City Plan of Conservation and Development, as well as, a letter of support from City Planner Robert Nerney which also documents that the park renovation is consistent with the City Plan of Conservation and Development.

In support of the application please also find attached current photos and captions documenting the current conditions of the Park, as well as, an in house created conceptual plan of the renovated park.

Section X. Past Grant Compliance:

The City was awarded a UGCG grant for the Hayden Homestead Park on June 4, 2026. The assistance agreement has not yet been executed as of October 8, 2026 and therefore no funds have been expended to report on.

APPENDIX A
SCOPE OF WORK

Project: The City of Waterbury (the "Contractor") shall construct in collaboration with its co-sponsor-Waterbury Development Corporation, renovations to an existing park (Curtin Park) which is in an environmental justice community, is municipally-owned, operated and maintained parcel in Waterbury (hereinafter the "Project" or "Project Site").

Description: Following the execution of this Contract, the Contractor in collaboration with its Co-sponsor agrees to complete the Project as outlined in this Scope of Work, subject to the following terms and conditions:

1. Project Activities/Deliverables:

A. The Contractor, shall:

(1) Procure and contract with the qualified Architect/Engineer to prepare the plans and specifications for the park renovations

(2) Publicly advertise the plans and specifications for the Curtin Park Renovation

(3) Mobilization and demobilization

(4) Surveying and Layout

(5) Clearing and grubbing -Prune and remove overgrown trees and vegetation

(6) Demolition and disposal of tennis court surfacing

(7) Removal of fences around tennis courts

(8) Removal of fence around park except behind baseball field and north fence

(9) Demolition and disposal of existing asphalt

(10) Cleaning site garbage

(11) Removal and installation of new swings and safety surfacing
(12) Resurface basketball court
(13) Splash pad modification
(14) Baseball field restoration and municipal goal and net installation
(15) Existing light pole rework
(16) Existing storm drainage rework and cleaning
(17) Existing bridge restoration and railings

(18) New Driveway entrance

(19) Drinking fountain

(20) Install pathways in the park

(21) New Fence around basketball courts

(22)Entrance signage

(23)Swing style gate

(24)Steel Heavy Duty Municipal goal

(25)Rock removal

(26)Fencing

(27) Picnic Benches

(28)Benches

(29)Trash cans

(30)Landscaping

PROJECT FINANCIAL BUDGET

Expenses	Cost/Value	DEEP Grant Award	Match Share	Match Source
Site Work				
Clearing and Grubbing 2,800 sq feet	$68,375	$44,187.50	$44,187.50	Municipality
Demolition and disposal of tennis courts	$68,375	34,187.50	34,187.50	Municipality
Removal of fences at existing tennis courts	$12,955	6,477.50	6,477.50	Municipality
Mobilization and demobilization	$11,375	5,687.50	$5,687.50	Municipality
Surveying and Layout	$12,375	$6,187.50	$6,187.50	Municipality
Removal of Fence around park	$17,455	$8,695.47	$8,695.47	Municipality
Demolition and disposal of existing asphalt	$18,375	$9,187.50	$9,187.50	Municipality
Cleaning site of garbage debris	$9,875	$4,937.50	$4,937.50	Municipality
Removal and installation of 2 new swings including safety surfacing	$20,375		$20,375	Municipality
Re-surface 2 basketball courts	$58,375		$58,375	Municipality
Splash pad modification for ground mount activation	$11,375		$11,375	Municipality

Ballfield restoration allowance	$23,375		$23,375	Municipality
Existing storm drainage rework and cleaning	$12,375	$12,375		
Existing bridge restoration and railings	$18,375	$18,375		
Driveway entrance 1200 sf	$16,875	$16,875		
New Asphalt Walking Path	$99,675	$49,837.50	$49,837.50	Municipality
New Fence around basketball court 2 sides	$26,855		$26,855	Municipality
Rock Removal Allowance	$15,000	$15,000		
5’ Tall Galvanized Chain Link Fence	$26,883		$26,883	Municipality
Site Furnishings				
Metal Benches	$58,475	$29,237.50	$29,237.50	Municipality
Trash Receptacles	$39,375	$19,687.50	$19,687.50	Municipality
Metal Picnic Tables	$19,125	$9,562.50	$9,562.50	Municipality
Existing light pole rework	$15,375	$15,375		
Drinking Fountain	$11,375	$11,375		
Steel Heavy Duty Municipal Goals	$14,575		$14,575	Municipality
12 Ft Steel swing gates	$20,375		$20,375	Municipality
Park signage	$22,375	$11,187.50	$11,187.50	Municipality
Plants & Landscaping				
Landscaping and seeding 30,000 sq feet	$58,375	$58,375		
Landscaping and Seeding of 20,000 sq feet former Tennis court area	$65,375	$65,375		
Design & Planning				
Architect/Engineer	$99,986.88	$49,993.44	$49,993.44	Municipality
Contingency 10%	$121,68.71	$60,844.36	$60,844.36	Municipality
TOTALS:	**$1,099,855.68**	**$547,896.34**	**$551,959.34**	

Attachment A

IRS Department of the Treasury
Internal Revenue Service
P.O. Box 2508
Cincinnati OH 45201

In reply refer to: 0248164841
Jan. 13, 2011 LTR 4168C E0
06-1549006 000000 00
00012077
BODC: TE

WATERBURY DEVELOPMENT CORPORATION
24 LEAVENWORTH ST
WATERBURY CT 06702-2121

RECEIVED
JAN 18 2011

012072

Employer Identification Number: 06-1549006
Person to Contact: B.HALL
Toll Free Telephone Number: 1-877-829-5500

Dear TAXPAYER:

This is in response to your Jan. 04, 2011, request for information regarding your tax-exempt status.

Our records indicate that you were recognized as exempt under section 501(c)(3) of the Internal Revenue Code in a determination letter issued in APRIL 2000.

Our records also indicate that you are not a private foundation within the meaning of section 509(a) of the Code because you are described in section(s) 509(a)(1) and 170(b)(1)(A)(vi).

Donors may deduct contributions to you as provided in section 170 of the Code. Bequests, legacies, devises, transfers, or gifts to you or for your use are deductible for Federal estate and gift tax purposes if they meet the applicable provisions of sections 2055, 2106, and 2522 of the Code.

Please refer to our website www.irs.gov/eo for information regarding filing requirements. Specifically, section 6033(j) of the Code provides that failure to file an annual information return for three consecutive years results in revocation of tax-exempt status as of the filing due date of the third return for organizations required to file. We will publish a list of organizations whose tax-exempt status was revoked under section 6033(j) of the Code on our website beginning in early 2011.

Attachment B

Secretary of the State of Connecticut
Certificate of Legal Existence

Certificate of □e□a□E□istence Certificate

Date Issued□Monday, Au□ust □7, 2026 3□□2 PM

I, the Connecticut Secretary of the State, and keeper of the sea□thereof, do hereby certify, that the certificate of incorporation for the be□o□ domestic □on-Stock corporation □as fi□ed in this office.

A certificate of disso□ution has not been fi□ed, the corporation has fi□ed a□□ annua□reports, and so far, as indicated by the records of this office, such corporation is in e□istence.

Business Details

Business □ame	WATERB□RY DEVE□OPME□T CORPORATIO□
Business A□EI	□S-CT.BER□0□□□□□8
Formation Date	09/20/□996

Secretary of the State

Attachment C

CPL-03 Rev 06/13

STATE OF CONNECTICUT
DEPARTMENT OF CONSUMER PROTECTION

This is your registration certificate confirming your Public Charity Exemption status. This registration allows the organization below to solicit charitable donations including fundraising in Connecticut. This registration is non-transferrable and cannot be used by any other organization. Do not attempt to make any changes or alter this certificate in any way.

A registration from this Department does not make donations to your organization tax deductible. The IRS determines the tax deductible status of an organization.

You must contact the Public Charities Unit at dcp.publiccharities@ct.gov when eligibility no longer exists. Please be sure to keep your information with our office current. You can update your email, address or print a duplicate certificate by logging into your account with your User ID and Password at www.elicense.ct.gov.

Mailing address:

WATERBURY DEVELOPMENT CORPORATION
83 BANK STREET
WATERBURY, CT 06721

Email on record:

NARDOZZI@WDCONLINE.ORG

1151724

STATE OF CONNECTICUT ✦ DEPARTMENT OF CONSUMER PROTECTION

Be it known that

WATERBURY DEVELOPMENT CORPORATION
83 BANK STREET
WATERBURY, CT 06721

is certified by the Department of Consumer Protection as a registered

PUBLIC CHARITY-EXEMPT FROM FINANCIAL REQUIREMENTS

Registration #: CHR.0070182-EXEMPT
Effective Date: 03/23/2026

Claimed exemption does not expire

Verify online at www.elicense.ct.gov

Bryan T. Cafferelli, Commissioner

Attachment D & E

MASTER MUNICIPAL AGREEMENT

BETWEEN

CITY OF WATERBURY

AND

WATERBURY DEVELOPMENT CORPORATION

Dated: February 12th, 2014

TABLE OF CONTENTS

Page #

1. DEFINITIONS

1.1 Administrator, Administration, Administrating 3, 4
1.2 Designated Program..... 4
1.3 Project or Program Authorization Letter (PAL)..... 4

2. DESIGNATION OF PROGRAM ADMINISTRATOR AND PROJECT MANAGER

2.1 Designations..... 4
2.2 Prior Designations..... 4
2.3 PAL Approval..... 4, 5
2.4 Revisions PAL..... 5
2.5 Content of PAL..... 5

3. CONDUCT

3.1 WDC Performance..... 5
3.2 Services..... 5
3.3 City Responsibility..... 6
3.4 Assignability..... 6
3.5 Draw-Downs..... 6

4. SUBCONTRACTS

4.1 Monitoring..... 6
4.2 Content..... 6

5. PROCUREMENT STANDARDS AND SELECTION PROCESS:

5.1 Standards and Selection Process..... 7

6. COMPENSATION

6.1 Full and Complete Payment..... 7
6.2 Fee Schedule..... 7
6.3 Limitation of Payment..... 8
6.4 Record keeping..... 8
6.5 Reimbursement..... 8
6.6 Proposal Costs..... 8
6.7 Payment for Services..... 8
6.8 Liens..... 8
6.9 Review of Work..... 9

7. HOLD HARMLESS

7.1 WDC Indemnify..... 9

7.2 Claims..... 9
7.3 Insurance..... 10

8. INSURANCE

8.1 Insurance obtained and approved 10
8.2 Insurance Requirements.....10
8.3 Policies.....10
8.4 Failure to Maintain Insurance..... 11
8.5 Certificates of Insurance..... 11
8.6 Replacement/Renewal Certificates..... 11
8.7 Proof of Insurance.....11

9. CONFORMANCE WITH FEDERAL, STATE AND OTHER JURISDICTIONAL REQUIREMENTS

9.1 Permits, Laws, Taxes and Regulations..... 12
9.2 Taxes-Federal, State and Local.....12
9.3 Labor and Wages..... 12
9.4 Minimum Wage..... 12

10. DISCRIMINATORY PRACTICES

10.1 Discrimination – Labor Matters.....13
10.2 Equal Opportunity.....13

11. CONFORMANCE WITH CITY ORDINANCE, HIRING OF WATERBURY RESIDENTS

11.1 Ordinance on Hiring Waterbury Residents.....13
11.2 Failure to Comply with Good Jobs Ordinance..... 13

12. HUD SECTION 3

12.1 Work Subject to HUD Section 3 Clause.....14
12.2 Agree to comply with Section 3 Clause.....14
12.3 Post Section 3 Notice.....14
12.4 Agreement to Include Section 3 Clause.....14
12.5 Vacant Positions.....14
12.6 Noncompliance with HUD regulations.....14
12.7 Indian Housing Assistance.....15

13. TERMINATION

13.1 Termination of Agreement for Cause..... 15
13.2 Termination for Convenience of the City..... 15
13.3 Termination of Non-Appropriation or Lack of Funding.....15

14. RIGHTS UPON CANCELLATION OF TERMINATION

14.1 Termination for Cause..... 16
14.2 Termination for Lack of Funding or Convenience..... 16
14.3 Termination by the WDC..... 17
14.4 Assumption of Subcontracts..... 17
14.5 Delivery of Documents.....17
14.6 Ownership of Instruments of Professional Services..... 17

15. FORCE MAJEURE..... 17

16. SUBCONTRACTING

16.1 Approval to Subcontract..... 18
16.2 Responsibility..... 18

17. AUDIT..... 18

18. RISK OF DAMAGE AND LOSS.....18

19. ENTIRE AGREEMENT..... 19

20. INDEPENDENT CONTRACTOR RELATIONSHIP.....19

21. SEVERABILITY..... 19

22. SURVIVAL..... 20

23. CONFLICTS OR DISPUTES..... 20

24. DISPUTES; LEGAL PROCEEDINGS.....20

25. BINDING AGREEMENT..... 20

26. WAIVER.....20

27. GOVERNING LAWS..... 21

28. NOTICE.....21

29. ACKNOWLEDGEMENTS, NOTICES AND REPRESENTATIONS

29.1 Material Breach – Employee 21
29.2 Material Breach – Violation of the City's Code of Ordinance..... 21
29.3 Material Breach – Gratuity..... 22
29.4 Recovery of Payment..... 22
29.5 Kickback..... 22
29.6 Solicitation..... 22
29.7 Required Documents..... 22
29.8 Interest of City Officials..... 23
29.9 Prohibition Against Contingency Fees..... 23
29.10 Freedom of Information Act Notice..... 23

30. CITY AND WDC DESIGNEES:

30.1 City Designee..... 23
30.2 WDC Designee..... 23

ADDENDUMS

ADDENDUM A - CDBG Program Statement of Work; Specific CDBG Certifications
ADDENDUM B - HOME Program Statement of Work; Specific HOME Certifications
ADDENDUM C - Emergency Solutions Grant Statement of Work; ESG Certifications
ADDENDUM D - Project Management Scope of Services

EXHIBITS

EXHIBIT A - City Ordinances
§31.269 – WDC Designation of Authority
§38.020-38.071 – Solicitation and Award Methods of Source Selection
§34.15-34.22 – Hiring of Waterbury Residents on Certain Publicly-Funded Construction Projects, and as further amended from time to time.
EXHIBIT B - U.S. Department of Housing and Urban Development
SF 424 – Certifications
EXHIBIT C - CFR Procurement Requirements
24 C.F.R. §84.40 – 84.48
EXHIBIT D - List of Current WDC Projects

MASTER MUNICIPAL AGREEMENT
BY AND BETWEEN
THE CITY OF WATERBURY
AND
THE WATERBURY DEVELOPMENT CORPORATION

THIS MASTER AGREEMENT, for Project/Program Management Services ("Master Agreement") is entered into by and between the **CITY OF WATERBURY**, a municipal corporation organized and existing under the laws of the State of Connecticut, located at 235 Grand Street, Waterbury, Connecticut, (the "City"), and **THE WATERBURY DEVELOPMENT CORPORATION** ("WDC"), a federally-recognized 501(c)(3) not-for-profit, duly registered domestic corporation, located at 83 Bank Street, 3rd Floor, Waterbury, Connecticut, (the "WDC").

WHEREAS, the City undertakes, and may financially participate in municipal economic development projects;

WHEREAS, the City is the Grantee of certain grant program funds pursuant to certain State and/or Federal Government Funding Approval/Agreements by and between the City and such State and Federal Government agencies;

WHEREAS, the City, as a Grantee has undertaken certain responsibilities and obligations pursuant to the Funding Approvals/Agreements to administer the grants and programs;

WHEREAS, by City Ordinance, currently codified at §31.269, a copy of which is attached hereto as Exhibit A, has designated the WDC, to be, among other designations, the City's Economic Development Agency, Housing Site Development Agency and Community Development Agency;

WHEREAS, by City Ordinance, currently codified at §31.269(C) the WDC, when duly designated, is authorized to act on behalf of the City in the capacity of general contractor, project manager, construction manager, design builder, owner's representative and/or in such other similar development or construction capacity or capacities, without the requirement or necessity of a bid;

WHEREAS, the City is the Grantee of the Community Development Block Grant ("CDBG"), the Emergency Solutions Grant "(ESG") and the Home Investments Partnership Program ("HOME") pursuant to certain Funding Approvals/Agreements by and between the City and the United States Department of Housing and Urban Development ("HUD");

WHEREAS, the City, as Applicant and Grantee, has undertaken certain responsibilities and obligations to HUD pursuant to such Funding Approval/Agreements to administer such grants and programs and through WDC, as a consequence of such responsibilities and obligations has made certain certifications to HUD for the current year and in a similar manner in previous funding years, as set forth in a form attached hereto as Exhibit B;

WHEREAS, the City, is further desirous of having the WDC assume and to continue certain responsibilities and obligation to administer the grants and programs on a project-by-project basis;

WHEREAS, the City, is desirous of having the WDC assume and to continue the responsibilities for certain economic development projects, on a project-by-project basis;

WHEREAS, the WDC is agreeable to the assumption and continuance of such responsibilities and obligations to administer such grants and programs and oversee and manage such projects on behalf of the City;

WHEREAS, the City, has previously designated the WDC as the administrator of grants and programs, including but not limited to, administrator of the Community Development Block Grant ("CDBG"), the Emergency Solutions Grant ("ESG"), and the Home Investments Partnership Program ("HOME") (as said programs have been or may be renamed or amended from time to time) as well as the operation and management of various programs and projects, including but not limited to the Senior Shuttle Program, under a Revised Agreement between the City and WDC, dated April 21, 2008; and

WHEREAS, the City has previously duly designated the WDC as the Project Manager for certain Economic and Development projects and so approved by the Board of Alderman, as listed on Exhibit A and will continue its obligations under such designations pursuant to the terms of this Agreement.

NOW, THEREFORE, IN CONSIDERATION OF THE MUTUAL PROMISES HERE, THE CITY AND WDC HEREBY AGREE AS FOLLOWS:

1. DEFINITIONS:

1.1 "Administrator", "Administration", "Administrating" of a program or project shall mean conducting, managing, and administration of any and all aspects of operations required to perform and complete the designated program or project by either the City or the WDC, as applicable to the particular designated program or project, in whole or part, including but not limited to, advertising and awarding any contract(s) for performance of work by contractor(s) in whole or part, or any combination thereof, and undertaking all the administrative duties related to and required for the completion of the designated program or project, and shall be conducted in such manner or satisfactory to the City and consistent with any and all relevant Federal, State and City standards

required by the funding source(s) and/or as may be a condition of the program/project funds.

1.2 "Designated Program" or "Designated Project" shall mean any program or project that the City has undertaken or participates for which the WDC has been duly designated to Administer on behalf of the City and for which the WDC is authorized to act on behalf of the City in conformance with City Ordinances as set forth in this Agreement, Charter and applicable State and Federal Law and Regulations.

1.3 Project or Program Authorization Letter ("PAL") shall mean the written documentation that authorizes and delineates the Designated Project or Designated Program and authorizing funding source to the WDC.

2. DESIGNATION OF PROGRAM ADMINISTRATOR AND PROJECT MANAGER:

2.1 Authority to Designate: The City, through the Mayor, shall designate WDC as Program Administrator or Project Manager on a program or project basis, in writing pursuant to City of Waterbury Code of Ordinances as set forth in this Agreement and/or applicable City of Waterbury Charter provisions.

2.2 Prior Program Designations:

A. The City has, by written agreement, revision dated April 21, 2008, designated the WDC as the Program Administrator of all aspects of the CDBG Program, the HOME Program and the ESG Program, pursuant to and in accordance with the specific program requirements as set forth in the April 21, 2008 Agreement, at Addendum "A" (CDBG); Addendum "B" (HOME), and Addendum "C" (ESG) respectively. Said Addendum A, B, and C are attached hereto and incorporated by reference to this Agreement. This Agreement shall supersede all prior Agreements for the covered programs identified herein at Paragraph 2.2 as said programs have been or may be renamed or amended from time to time.

B. Pursuant to said prior Program Administrator designation referenced in Paragraph 2.2 herein, the WDC was designated as Program Administrator for the Senior Shuttle Program. Said designation shall continue and this Agreement shall supersede all prior agreements.

C. The City hereby ratifies and authorizes all previous programs and/or projects assigned to WDC by the City.

2.3 PAL Approval: The City shall issue to the WDC a Program and/or Project Authorization Letter ("PAL"), which will be addressed to the Chief Executive Officer of WDC and signed by the Mayor. Each PAL issued under this Agreement shall comply with City Ordinance provisions regarding the Execution of Contracts, as amended from

time to time and currently at §38.072 of City Ordinance. Inclusive of said requirements, but not limited thereto and incorporated by reference are the specific following requirements:

A. Execution by the Mayor: The Mayor, on behalf of the City shall execute each PAL.

B. Role of Corporation Counsel: The Corporation Counsel, shall approve each PAL as to form and compliance with all legal requirements, including City Charter and Ordinances.

C. Approval by the Board of Aldermen: Each PAL shall be subject to Board of Aldermen approval.

2.4 Revisions to the PAL: Any modification to the scope, the allowed funding amount, or cost breakdown of the Designated Program or Designated Project must be signed by the Mayor, and is subject to approvals and in accordance with the procedures set forth above 2.3, any revised PAL will supersede the previously issued PAL and will control unless otherwise provided.

2.5 Content of the PAL: The PAL issued by the City shall set forth, at a minimum:

A. The Funding source(s); the related funding authorization or program information; any associated funding ratio between the City and other funding sources including Federal or State Government sources, as applicable;

B. The maximum City funds or ratio;

C. City Certification of fund availability;

D. An estimated cost breakdown for the designated Project or Program, if applicable;

E. The total estimated Project/Program amount;

3. CONDUCT:

3.1 WDC to perform and complete: Upon approval of the PAL, the WDC in its own name may apply for state and federal grants and otherwise shall administer and engage in all activity associated with the Designated Program/Designated Project in accordance with the PAL and this Master Agreement.

3.2 Service: With respect to program and project management, the WDC shall, in its own name, perform the services as set forth in Addendum D herein on each

designated project or program in addition to the services set forth and further amplified in each PAL;

3.3 The City shall remain primarily responsible and liable for all grant and program funds awarded and to be expended by the WDC on behalf of the City pursuant to this Master Agreement. As such, in order to allow proper monitoring and oversight of such expenditures by the City, the WDC will set up requests for draw-downs against grant and program funds allocated to the City, using software or other draw down protocols as provided by a grant program or funding source, including but not limited to IDIS software system provided by HUD; provided, however, that final authorization to expend such funds shall only occur after review and final approval of any such draw-downs/expenditures by the City, utilizing IDIS or such other software or protocols adopted from time to time.

3.4 Assignability: The WDC shall not assign any interest in this Master Agreement, and shall not transfer any interest in the same, by assignment or novation, without the prior written approval of the City and subject to any applicable City Ordinance and Charter provisions.

3.5 Draw-Downs: Upon final approval by the City for any draw-down(s) funding will be electronically transferred directly to the City's bank account for subsequent re-transfer electronically to the WDC's bank account or shall be transferred by such other protocol that is established from time to time by a grant or other funding source. The City shall only record receipt of the funds and the transfer of those funds to WDC, but shall not record any expenses. WDC shall record receipt of such transfer from the City and the expenditures made there from.

4. SUBCONTRACTS:

4.1 Monitoring: The WDC will monitor all subcontracted services on a regular basis, to the reasonable satisfaction of the City, to assure contract compliance. Results of monitoring efforts shall be summarized in written reports and supported with documented evidence of follow-up actions taken to correct areas of noncompliance.

4.2 Content: The WDC shall insure that any subcontractor agreement entered into in the performance of this Master Agreement contains all provisions mandated by Federal, State and local law and/or regulations as set forth herein. All subcontracts shall further include any other provisions of this Master Agreement that may be applicable either explicitly or by incorporation of this Master Agreement by reference or as requested by the PAL. Despite any failure to include any provision(s) contemplated by this paragraph in the subcontract, the WDC will nonetheless be bound by any and all applicable provision contained in this Master Agreement.

5. PROCUREMENT STANDARDS AND SELECTION PROCESS:

5.1 Standards and selection process: Unless otherwise required by a funding source, to expedite and streamline the approval and execution process for any contract or subcontract pursuant to a PAL, the WDC shall undertake to insure that all contracts and subcontracts under this Master Agreement are awarded on a fair, and open competitive basis, as directed by the City Director of Purchasing, utilizing one or more of the following procedures:

A. The WDC shall procure all materials, property or services in accordance with the requirements of 24C.F.R. §84.40-84.48, establishing procedures for the procurement of supplies and other expendable property, equipment, real property, and other services with Federal Funds, attached hereto as Exhibit C; or

B. Any procurement as defined by City Ordinance §38.020 shall be made by the WDC in accordance with a process that is identical to the City's Solicitation and Award Methods of Source Selection" requirements pursuant to City Ordinance §38.020-38.071 as amended from time-to time; attached hereto as Exhibit A; or

C. As performed by and under the direction and supervision of the City's Director of Purchasing and in his sole discretion.

6. COMPENSATION:

6.1 Full and Complete Payment: Compensation provided under this Section 6 for Designated Project/Designated Program shall consist of full and complete payment for all reasonable costs assumed by the WDC in performing a PAL, including, but not limited to, salaries, fringe benefits, including vacation, and overhead; WDC fees; costs of materials and supplies; printing and reproduction; meetings, consultation and presentations; travel expenses; postage; telephone; clerical expenses, and all similar expenses. The provisions of this Section 6 do not apply to or affect funds that may be appropriated by the City to the WDC from time to time for the WDC's general purposes. No direct costs shall be reimbursed by the City other than as provided herein, except for legal fees incurred by the WDC in the defense of third party claims as a result of the City's negligence, provided that the WDC has properly discharged its services under this Agreement and, provided further, that the WDC immediately informs the City in writing of any such claims, affording the City the opportunity to determine, in its sole discretion, whether it desires to undertake the defense of any such claims.

6.2 Fee Schedule: The fee payable to the WDC under this Agreement shall be set forth on a project-by-project basis pursuant to each PAL.

6.3 Limitation of Payment: Compensation payable to the WDC is limited to those fees set forth in this Section 6 herein. Such compensation shall be paid by the City upon review and approval of the WDC's invoices for payment, submitted no more often than once a month, and review of the work, services, reimbursable costs, deliverables, etc. required in this agreement and review as may be further required by the Charter and Ordinances of the City. The WDC's invoices shall describe the work, the actual hours worked by each WDC employee, services, reimbursable costs, reports, plans, specifications, deliverables, etc. rendered and the compensation sought therefore in a form and with detail and clarity acceptable to the City.

6.4 Recording Keeping: The WDC shall document all expenses it incurs and maintain all records relating to each Designated Project or Designated Program costs, including but not limited to its payroll hours on timesheets of staff working directly on any Designated Project or Designated Program, material purchases made by the WDC and reimbursement due to the WDC for use of the WDC-owned or rented equipment. Rates of reimbursement will be based on existing city audited rate, if none, then pursuant to reasonable industry standards. Reimbursable payroll costs are limited to actual WDC payroll for work on the Project or Program and fringe benefits as set forth in this Section 6.

6.5 Reimbursement: The WDC shall seek reimbursement for its expenditures first from any Project or Program funding source as may be allowed or granted. Upon approval of reimbursement for any portion of the WDC costs and expenses, by any other funding source, the WDC shall submit to the City invoicing for the City's proportionate share of the reimbursable costs and expenses pursuant to any cost sharing established by the PAL.

6.6 Proposal Costs: All costs of the WDC in preparing its estimate of cost for this Designated Project or Designated Program shall be solely borne by the WDC and are not included in the compensation to be paid by the City to the WDC under this Agreement or any other agreement.

6.7 Payment for Services, Materials and Employees: The WDC shall be fully and solely responsible for the suitability of and compliance with this Agreement, of all labor, services, equipment, materials, reports, plans, specifications, deliverables, incidentals, etc. furnished to the City by the WDC under this Agreement. The WDC shall promptly pay all employees as their pay falls due, shall pay promptly as they fall due all bills for labor, services, equipment, materials, reports, plans, specifications, deliverables, incidentals, etc., going into the work, and all bills for insurance, bonds, Worker's Compensation coverage, Federal and State Unemployment Compensation, and Social Security charges applicable to this project. Before final payment is made, the WDC shall furnish a legal statement to the City that all payments required under this subparagraph have been made.

6.8 Liens: Neither the final payment nor any part of any retained percentage, if any, shall become due until the WDC, if requested by the City, shall deliver to the City

a complete release of all liens arising out of this agreement, or receipts in full (subject to contractual retainages) in lieu thereof, and, if required, in either case, an affidavit that so far as the WDC has knowledge or information, the releases and receipts include all the labor and material for which a lien could be filed; but the WDC may, if any subcontractor refuses to furnish a release or receipt in full, furnish a bond satisfactory to the City, to indemnify it against any lien. If any lien remains unsatisfied after all payments are made, the WDC shall refund to the City all moneys that the City may be compelled to pay in discharging such a lien, including all costs and a reasonable attorney's fee.

6.9 Review of Work: The WDC shall permit the City to review, at any time, all work performed under the terms of this Agreement at any stage of the work. The WDC shall maintain or cause to be maintained, throughout the duration of the Project and for a reasonable period thereafter as may be necessary for any required or desired audits, all records, books or other documents relative to salaries, fringe benefits, overhead, charges, costs, expenses, fees, alleged breaches of the agreement, settlement of claims or any other matter pertaining to the WDC's demand for payment. Further any and all such records of the WDC pertaining to the Project shall be available for review by the City at all reasonable times. The City shall not certify fees for payment to the WDC until the City has determined that the WDC has completed the work in accordance with the requirements of this Agreement.

7. HOLD HARMLESS:

7.1 The WDC shall indemnify, defend, and hold harmless the City and its boards, the City's Board of Education (if applicable), commissions, agents, officials and employees from and against all claims, suits, damages, losses, judgments, costs and expenses including attorney's fees arising out of or resulting from the delivery of the labor, services, equipment, materials, reports, plans, specifications, deliverables, incidentals, etc., provided that any such claims, suits, damages, losses, judgments, costs or expenses (a) are attributable to bodily injury, sickness, disease or death, or injury to or destruction of tangible property (other than the services itself) including the loss of use resulting there from, and (b) are caused by any willful or negligent act or omission of the WDC, its employees, its subcontractors, or anyone employed by them or anyone for whose acts any of them may be liable.

7.2 In any and all claims against the City or any of its boards, agents, employees or officers by the WDC or any employee of the WDC, any subcontractor, anyone directly or indirectly employed by any of them or anyone for whose acts any of them may be liable, the indemnification obligation under Paragraph 7.1, herein, shall not be limited in any way by any limitation on the amount or type of damages, compensation or benefits payable by or for the WDC or any subcontractor under Worker's Compensation Acts, disability benefit acts or other employee benefit acts.

7.3 The WDC understands and agrees that any insurance required by this agreement, or otherwise provided by the WDC, shall in no way limit the responsibility to indemnify, defend, keep and hold harmless the City as provided in this agreement.

8. INSURANCE:

8.1 The WDC shall not commence work under this agreement until all insurance required under this Section 8 has been obtained by the WDC and/or such insurance has been approved by the City. The WDC shall not allow any subcontractor to commence work on any subcontract until all insurance required of any such contractor has been so obtained and approved by the WDC.

8.2 Insurance Requirements: Insurance shall be provided by insurers that are satisfactory to the WDC, authorized to do business in the State of Connecticut, that have at least an "A-" Best's Rating, and are in an A.M. Best financial size category of VII or higher. The A.M. Best classifications are based on the most current A.M. Best Company ratings or an equivalent City approved rating system.

8.3 Policies: The WDC's General, Automobile and Excess Liability Insurance policies shall be endorsed to add the City as an additional insured. The insurance afforded the additional insured shall be primary insurance and the coverage and limits provided under the WDC's policies shall not be reduced or prorated by the existence of any other insurance applicable to any loss the additional insured may have suffered. Each insurance policy shall state that the insurance company shall agree to investigate and defend the insured against all claims for damages, provided the claim is for a loss covered by the terms of the applicable policy, even if groundless. If any insurance required herein is to be issued or renewed on a claims made form as opposed to an occurrence form, the retroactive date for coverage shall be no later than the commencement date of this agreement and shall provide that in the event of cancellation or non-renewal, the discovery period for insurance claims ("Tail Coverage") shall be available for at least 60 months.

The following policies with stated limits shall be maintained, in full force and effect, at all times during which the services are to be performed by the WDC:

A. General Liability Insurance: $1,000,000.00 per occurrence, $2,000,000.00 aggregate. Providing coverage to protect the City for all damages arising out of bodily injuries sickness or death of all persons in any one accident or occurrence and for all damages arising out of destruction of property in any one accident or occurrence.

B. Automobile Liability Insurance: $1,000,000.00 combined single limit (CSL). Providing coverage to protect the City with respect to claims for damage for bodily injury and or property damage arising out of ownership,

maintenance, operation, use or loading and unloading of any owned or non-owned vehicle

C. Workers' Compensation: Statutory Limits within the State of Connecticut. The WDC shall comply with all State of Connecticut statutes as it relates to workers' compensation.

D. Excess Liability Insurance: $3,000,000.00 aggregate limit. Comprehensive general liability umbrella insurance coverage.

8.4 Failure to Maintain Insurance: In the event the WDC fails to maintain the minimum required coverage as set forth herein, the City may, at its option, purchase same and offset the WDC's invoices for the cost of said insurance.

Cancellation: The WDC shall provide a copy of all notices of cancellation received from their insured within 5 days of said receipt, by them of said notice of cancellation, regardless of the reason for such cancellation.

8.5 Certificates of Insurance: At the time the WDC executes this agreement, it shall furnish to the City, subject to City approval, certificate(s) of insurance verifying the above coverage's, including the naming of the City of Waterbury, as follows:

"The City of Waterbury and its Board of Education (if applicable)
are listed as additional insured as their interests may appear".

8.6 The WDC must supply replacement/renewal certificates at least 30 days prior to the expiration of the policy (ies). Said certificates shall contain a provision that coverage afforded under the policies shall not be cancelled or reduced for any reasons unless notice of not less than thirty (30) calendar days has been mailed to the Risk Manager, 235 Grand Street, Waterbury, CT. 06702.

8.7 Upon request, the WDC shall deliver to the City a copy of the WDC's insurance policies, endorsements, and riders.

9. CONFORMANCE WITH FEDERAL, STATE AND OTHER JURISDICTIONAL REQUIREMENTS:

By executing this Agreement, the WDC represents and warrants that, at all pertinent and relevant times to the Agreement, it will remain in full compliance with all applicable statutes, acts, ordinances, guidelines, resolutions, orders, judgments, decrees, injunctions, rules, and regulations of all government authorities applicable to performance by the WDC of services hereunder, including those having jurisdiction over its registration and licensing to perform services hereunder; including, but not limited to, the following: EQUAL EMPLOYMENT OPPORTUNITY ACT; COPELAND ANTI-KICKBACK ACT, as supplemented in the Department of Labor Regulations (29 CFR Part 3); DAVIS-BACON ACT as supplemented by Department of Labor Regulations (29

CFR Part 5); Section 103 and 107 of the Contract Work Hours and Safety Standards Act, as supplemented by the Department of Labor Regulations (29 CFR Part 5); and the HOUSING and COMMUNITY DEVELOPMENT ACT of 1974, as amended. All applicable sections of the City Charter and Code of Ordinances are incorporated by reference and made a part hereof.

The WDC hereby agrees and shall comply with any and all requirements of the Freedom of Information Act, as it may be amended from time-to-time, with reference to this contract and any work performed by WDC and/or any of its subcontractors or agents.

9.1 Permits, Laws, Taxes and Regulations. Permits and licenses necessary for the delivery and completion of the WDC's work and services shall be secured in advance and paid by the WDC. The WDC shall give all notices and comply with all laws, ordinances, rules and regulations bearing on the conduct of the work and services as specified.

9.2 Taxes-Federal, State and Local. The City is exempt from Federal Excise and Transportation, State and Local Sales and Use Taxes, including without limitation, taxes that would otherwise be imposed upon the WDC for transactions required or necessitated hereunder between it and its subcontractors, suppliers, etc. The WDC remains liable, however, for any applicable tax obligations it incurs. Moreover, the WDC represents that the proposal and pricing contained in any PAL will not include an amount payable for said taxes.

9.3 Labor and Wages. The WDC shall conform to the labor laws of the State of Connecticut, and all other laws, ordinances, and legal requirements affecting the work in Connecticut and shall require such conformance in its contracts with subcontractors.

9.4 The WDC is aware of the provisions of Title 31, §53 of the Connecticut General Statutes, latest revision (the "Act"), concerning the payment of minimum wages and other payments or contributions established by the State of Connecticut Labor Commissioner for work on public facilities. The provisions of the Act are incorporated by reference and made a part of this agreement. The Act provides, in part, that the prevailing wage law applies to (i) new construction where the total cost of all work performed by all contractors and subcontractors is equal to or greater than $400,000.00, and (ii) remodeling, refurbishing, rehabilitation, alteration or repair of any project where the total cost of all work performed by all contractors and subcontractors is equal to or greater than $100,000.00.

10. DISCRIMINATORY PRACTICES:

In performing this agreement, the WDC shall not discriminate against any employee or applicant for employment, with respect to his or her hire, tenure, terms, conditions or privileges of employment, or any matter directly or indirectly related to employment, because of race, color, sex, age, religious creed, disability, national origin or ancestry, marital status, family status, prior psychiatric treatment, health care, military

status or source of income or because of a handicap that is unrelated to the employee's or the applicant's ability to perform the duties of a particular job or position. Subcontracts with each subcontractor shall contain a provision requiring non-discrimination in employment as herein specified. This covenant is required pursuant to §93.04 of the Code of Ordinances of the City and any breach thereof may be regarded as a material breach of this agreement. Said provisions with subcontractors shall require conformity and compliance with all Local, State and Federal laws, rules and regulations and Executive orders pertaining to discrimination and equal opportunity requirements.

10.1 Discrimination Because of Certain Labor Matters: No person employed on the work covered by this agreement shall be discharged or in any way discriminated against because such person has filed any complaint or instituted or caused to be instituted any proceeding or has testified or is about to testify in any proceeding under or related to the labor standards applicable hereunder to its employer.

10.2 Equal Opportunity: In its execution of the performance of this agreement, the WDC shall not discriminate and shall comply with applicable laws prohibiting discrimination on the grounds of race, color, religion, sex, national origin or citizenship status, age or handicap. The WDC agrees to comply with all Local, State and Federal laws, rules and regulations and Executive orders pertaining to discrimination and equal opportunity requirements, and will require the same of all subcontractors.

11. CONFORMANCE WITH CITY ORDINANCE, HIRING OF WATERBURY RESIDENTS

Conformance with City Ordinance §34.15; Hiring Of Waterbury Residents On Certain Publicly-Funded Construction Projects, as amended from time-to-time. The Ordinance is attached hereto as Exhibit A and a copy of the current ordinance shall be prominently including in each contract/subcontract subject to §34.15.

11.1 The WDC shall comply with the specific requirements of "An Ordinance Concerning the Hiring of Waterbury Residents on Certain Publicly-Funded Construction Projects" (the "Good Jobs Ordinance"), as may be amended from time to time and as set forth in Chapter 34 of the Code of Ordinances of the City and shall require such compliance by subcontactors in its subcontracts. The Contractor does hereby acknowledge that it has reviewed a copy of the Good Jobs Ordinance and that it has read the Ordinance and that Contractor is familiar with the obligations imposed on the Contractor by the Good Jobs Ordinance.

11.2 Failure of the Contractor or its Subcontractors to comply with the Good Jobs Ordinance shall be a material breach of this Agreement.

12. HOUSING AND URBAN DEVELOPMENT SECTION 3 CLAUSE:

In the event a PAL is funded, in whole or in part, through Housing and Urban Development assistance, 24 C.F.R. §135.38 may apply and the WDC shall then be

required to comply with and include in subcontracts, the following language (referred to as the "Section 3 clause"):

12.1 The work to be performed under this contract is subject to the requirements of Section 3 of the Housing and Urban Development Act of 1968, as amended, 12 U.S.C. § 1701u (Section 3). The purpose of Section 3 is to ensure that employment and other economic opportunities generated by HUD assistance or HUD-assisted Projects covered by Section 3, shall, to the greatest extent feasible, be directed to low and very low-income persons, particularly persons who are recipients of HUD assistance for housing.

12.2 The parties to this contract agree to comply with HUD's regulations in 24 C.F.R. part 135, which implement Section 3. As evidenced by their execution of this contract, the parties to this contract certify that they are under no contractual or other impediment that would prevent them from complying with the part 135 regulations.

12.3 The contractor agrees to send to each labor organization or representative of workers with which the contractor has a collective bargaining agreement or other understanding, if any, a notice advising the labor organization or workers' representative of the contractor's commitments under this Section 3 clause, and will post copies of the notice in conspicuous places at the work site where both employees and applicants for training and employment positions can see the notice. The notice shall describe the Section 3 preference, shall set forth minimum number and job titles subject to hire, availability of apprenticeship and training positions, the qualifications for each; and the name and location of the person(s) taking applications for each of the positions; and the anticipated date the work shall begin.

12.4 The contractor agrees to include this Section 3 clause in every subcontract subject to compliance with regulations in 24 C.F.R. part 135, and agrees to take appropriate action, as provided in an applicable provision of the subcontract or in this Section 3 clause, upon a finding that the subcontractor is in violation of the regulations in 24 C.F.R. part 135. The contractor will not subcontract with any subcontractor where the contractor has notice or knowledge that the subcontractor has been found in violation of the regulations in 24 C.F.R. part 135.

12.5 The contractor will certify that any vacant employment positions, including training positions, that are filled (1) after the contractor is selected but before the contract is executed, and (2) with persons other than those to whom the regulations of 24 C.F.R. part 135 require employment opportunities to be directed, were not filled to circumvent the contractor's obligations under 24 C.F.R. part 135.

12.6 Noncompliance with HUD's regulations in 24 C.F.R. part 135 may result in sanctions, termination of this contract for default, and debarment or suspension from future HUD assisted contracts.

12.7 With respect to work performed in connection with Section 3 covered Indian housing assistance, section 7(b) of the Indian Self-Determination and Education Assistance Act (25 U.S.C. § 450e) also applies to the work to be performed under this contract. Section 7(b) requires that to the greatest extent feasible (i) preference and opportunities for training and employment shall be given to Indians, and (ii) preference in the award of contracts and subcontracts shall be given to Indian organizations and Indian-owned Economic Enterprises. Parties to this contract that are subject to the provisions of Section 3 and section 7(b) agree to comply with Section 3 to the maximum extent feasible, but not in derogation of compliance with section 7(b).

13. TERMINATION:

13.1 Termination of Agreement for Cause: If, through any cause, in part or in full, the fault of the WDC, the WDC shall materially fail to fulfill in a timely and proper manner its obligations under this agreement, or if the WDC shall commit a material violation any of the covenants, agreements, or stipulations of this Agreement, the City shall thereupon have the right to terminate this Agreement by giving written notice to the WDC of such termination and specifying the effective date thereof, at least fifteen (15) days before the effective date of such termination and an opportunity to cure by the end of the fifteen (15) day period. In the event of such termination, all finished or unfinished documents, data, studies, reports, specifications, deliverables, etc. prepared by the WDC under this agreement shall, at the option of the City, become the City's property, and the WDC shall be entitled to receive just and equitable compensation for any satisfactory work completed for such.

Notwithstanding the above, the WDC shall not be relieved of liability to the City for damages sustained by the City by virtue of any breach of this Agreement by the WDC, and the City may withhold any payments to the WDC for the purpose of setoff until such time as the exact amount of damages due the City from the WDC is determined.

13.2 Termination for Convenience of the City: The City may terminate this Agreement at any time for the convenience of the City, by a notice in writing from the City to the WDC. If this Agreement is terminated by the City as provided herein, the WDC will be paid an amount which bears the same ratio to the total compensation as the services actually performed bear to the total services of the WDC covered by this agreement, less payments of compensation previously made.

13.3 Termination for Non-Appropriation or Lack of Funding: The WDC acknowledges that the City is a municipal corporation and that this Agreement is subject to the appropriation of funds by the City sufficient for this agreement for each budget year in which this agreement is in effect. The WDC therefore agrees that the City shall have the right to terminate this Agreement in whole or in part without penalty in the event sufficient funds to provide for City payment(s) under this agreement is/are not

appropriated, not authorized or not made available pursuant to law, or such funding has been reduced pursuant to law.

A. Effects of Non-Appropriation: If funds to enable the City to effect continued payment under this Agreement are not appropriated, authorized or otherwise made available by law, the City shall have the right to terminate this Agreement without penalty at the end of the last period for which funds have been appropriated, authorized or otherwise made available by law by giving written notice of termination to the WDC.

B. Effects of Reduced Levels of Funding: If funding is reduced by law, or funds to pay the WDC for the agreed to level of the products, services and functions to be provided by the WDC under this Agreement are not appropriated, authorized or otherwise made available by law, the City may, upon seven (7) business days written notice to the WDC, reduce the level of the products, services or functions in such manner and for such periods of time as the City may elect. The services to be performed and the charges payable under this Agreement shall be equitably adjusted to reflect such reduced level of products, services or functions and the parties shall be afforded the rights set forth in this agreement.

C. No Payment for Lost Profits: In no event shall the City be obligated to pay or otherwise compensate the WDC for any lost or expected future profits.

14. RIGHTS UPON CANCELLATION OR TERMINATION:

14.1 Termination for Cause: In the event the City terminates this Agreement for cause, the WDC shall relinquish to the City any applicable interest, title and ownership including, but not limited to, perpetual use of any proprietary rights in and to the documents, data, studies, reports, specifications, deliverables, etc. provided to, in possession of, and properly invoiced and paid for by the City (except to the extent such invoiced amount is disputed). With regard to third party products, the WDC shall transfer all licenses to the City which the WDC is permitted to transfer in accordance with the applicable third party license. The City shall have no financial obligation to compensate the WDC for such terminated documents, data, studies, reports, specifications, deliverables, etc. unless payment is otherwise approved by the City prior to such termination. In the event of any litigation related to the termination of this Agreement, the prevailing party shall be entitled to its reasonable attorney fees and court awarded fees and costs incurred.

14.2 Termination for Lack of Funding or Convenience: In the event of termination by the City for lack of funding or convenience, the City shall pay the WDC for all documents, data, studies, reports, specifications, deliverables, etc. (including any holdbacks), installed and delivered to the City as of the Termination Date and the WDC shall relinquish to the City any applicable interest, title and ownership including, but not

limited to perpetual use of any proprietary rights in and to said documents, data, studies, reports, specifications, deliverables, etc. in possession of and paid for by the City (except to the extent any invoiced amount is disputed). The WDC shall be required to exercise commercially reasonable efforts to mitigate damages. In the event of a termination for Lack of Funding or Convenience the City and the WDC may negotiate a mutually acceptable payment to the WDC for reasonable demobilization expenses. Said demobilization expenses, if any, shall be handled in accordance with the provision of this agreement pertaining to Changes in the Work.

14.3 Termination by the WDC: The WDC may, by written notice to the City, terminate this agreement if the City materially breaches, provided that the WDC shall give the City thirty (30) calendar days prior written notice and an opportunity to cure by the end of said thirty day period. In the event of such termination, the WDC will be compensated by the City for work performed prior to such termination date and the WDC shall deliver to the City all deliverables as otherwise set forth in this agreement.

14.4 Assumption of Subcontracts: In the event of termination, the City shall assume any and all subcontracts for products, services and functions provided exclusively under this Agreement and may further pursue completion of the work under this Agreement by replacement contract or otherwise as the City may in its sole judgment deem expedient.

14.5 Delivery of Documents: In the event of termination, (i) the WDC shall promptly deliver to the City, in a manner reasonably specified by the City, all labor, services, equipment, materials, reports, plans, specifications, deliverables, incidentals, etc and other tangible items furnished by, or owned, leased, or licensed by, the City, and (ii) the City shall pay the WDC for all services performed and deliverables completed and accepted (pro-rated for deliverables partially completed) prior to the effective date of the termination (except to the extent any invoice amount is disputed).

14.6 Ownership of Instruments of Professional Services: The City acknowledges that the WDC's documents, data, studies, reports, specifications, deliverables, etc. created and to be created pursuant to this agreement, including electronic files, are Instruments of Professional Services. Nevertheless, subject to applicable trademark, copyright or patent law, the final Instruments of Professional Services, including, but not limited to, documents, data, studies, reports, specifications, deliverables, etc. prepared for the City under this agreement shall become the property of the City upon City payment for that Instrument of Professional Services and the City reserves the right to use the Instruments of Professional Services.

15. FORCE MAJEURE:

The WDC shall not be held responsible for delays nor be subject to liquidated damages when such delays are caused by conditions beyond its control, including without limitation:

A. Acts of God, fire, explosion, epidemic, cyclone, flood, war, strikes, revolution, civil commotion, or acts of public enemies.

B. Change of law and order, proclamation, regulation, ordinance, or governmental requirement.

C. Delays caused by the WDC's vendors, except where such delays are the result of lack of adequate coordination by the WDC.

Upon cessation of work for reason of force majeure delays, the WDC shall use its best efforts to meet the schedule set forth in a PAL.

16. SUBCONTRACTING:

16.1 The WDC shall not, without the prior written approval of the City, subcontract, in whole or in part, any of the WDC's services. Any subcontractor so approved shall be required to secure and maintain insurance coverage equal to or better than that required of the WDC and shall name the City as an additional insured party and said subcontractors shall deliver to the City a certificate of insurance evidencing such coverages. All subcontractors shall comply with all Federal, State and Local, laws, regulations and ordinances but such requirement shall not relieve the WDC from its requirement that all work and services provided or required hereunder shall comply with all Federal, State and Local, laws, regulations and ordinances.

16.2 The WDC shall be as fully responsible to the City for the acts and omissions of the WDC's subcontractors, and of persons either directly or indirectly employed by them, as it is for the acts and omissions of persons directly employed by the WDC.

17. AUDIT:

The City reserves the right to audit the WDC's books of account in relation to this agreement any time during the period of this agreement or at any time during the twelve month period immediately following the closing or termination of this agreement. In the event the City elects to conduct such an audit, the WDC shall immediately make available to the City all records pertaining to this agreement, including, but not limited to, payroll records, bank statements and canceled checks.

18. RISK OF DAMAGE AND LOSS:

The WDC shall be solely responsible for causing the timely repair to and/or replacement of, City personal property or item(s) intended to become City property hereunder, where the need for repair or replacement was caused solely by the WDC, by someone under the care and/or control of the WDC by any subcontractor of the WDC, or by any shipper or delivery service if the risk of loss was allocated to the WDC upon shipment. The WDC shall be solely responsible for all costs and expenses, including but

not limited to shipping, delivery, insurance, etc, associated with the foregoing repair and replacement obligation. Further, the WDC shall be solely responsible for securing the City's written acceptance of all completed repairs and replacements required hereunder. The City hereby retains sole discretion to determine whether a repair or a replacement is the proper remedy.

19. ENTIRE AGREEMENT:

This agreement shall constitute the complete and exclusive statement excepted as provided; other than as direct on behalf of the City, of the Contract between the parties as it relates to this transaction and supersedes all previous agreements and understandings, whether written or oral, relating to such subject matter. Any amendment to this agreement must be in writing and agreed to and executed by the City and the WDC.

20. INDEPENDENT CONTRACTOR RELATIONSHIP:

The relationship between the City and the WDC is that of client and independent contractor, and as further defined in Sections 31.265 through Sections 31.270 of the City of Waterbury Code of Ordinances. No agent, employee, or servant of the WDC shall be deemed to be an employee, agent or servant of the City. The WDC shall be solely and entirely responsible for its acts and the acts of its agents, employees, servants and subcontractors during the performance of this agreement. It is the express intention of the parties hereto, and the WDC hereby agrees and covenants, that it and any and all third party(ies) and subcontractor(s) retained by the WDC hereunder is/are not and shall not be deemed an employee of the City of Waterbury, but is/are and shall remain an independent contractor relative to the City and that nothing herein shall be interpreted or construed as creating or establishing the relationship of employer-employee between the City of Waterbury and the WDC or between the City of Waterbury and any third party(ies) or subcontractor(s). Thus, the WDC hereby covenants and agrees that it, its subcontractor(s) and third party (ies) shall not be entitled to the usual characteristics of employment, such as income tax withholding, F.I.C.A. deductions, pension or retirement privileges, Workers Compensation coverage, health benefits, etc. and that the WDC shall be solely and entirely responsible for its acts and the acts of its agents, employees, servants, representatives, subcontractors and third party (ies).

Notwithstanding the designation of an independent contractor, the WDC hereby agrees that it shall be subject to any and all requirements of the Freedom of Information Act, as it may be amended from time-to-time, with reference to this contract and any work performed by WDC and/or any of its subcontractors or agents.

21. SEVERABILITY:

Whenever possible, each provision of this Agreement shall be interpreted in such a manner as to be effective and valid under applicable law. If any provision of this agreement, however, is held to be prohibited or invalid under applicable law, such provision shall be deemed restated to reflect the original intentions of the parties, as

nearly as possible in accordance with applicable law, and if capable of substantial performance, the remaining provisions of this agreement shall be enforced as if this agreement was entered into without an invalid provision. If the ruling and/or controlling principle of law or equity leading to the ruling is subsequently overruled, modified or amended by legislation, judicial or administrative action, then the provision(s) in question as originally set forth in this agreement shall be deemed valid and enforceable to the maximum extent permitted by the new controlling principal of law or equity.

22. SURVIVAL:

Any provisions of this Agreement that impose continuing obligations on the parties shall survive the expiration or termination of this agreement for any reason.

23. CONFLICTS OR DISPUTES:

This Agreement represents the full and complete concurrence between the City and the WDC, governs all disputes between them and supersedes all statements to the contrary occurring either in proposals or other prior agreements, oral or written, and all other communications between the parties relating to this subject. This agreement or any section thereof shall not be construed against any party due to the fact that the agreement or any section thereof was drafted by such party.

24. DISPUTES; LEGAL PROCEEDINGS; WAIVER OF TRAIL BY JURY AND CONTINUED PERFORMANCE:

The WDC agrees that its waives a trial by jury as to any and all claims, causes of action or disputes arising out of this agreement or services to be provided pursuant to this agreement. Notwithstanding any such claim, dispute or legal action, the WDC shall continue to perform services under this agreement in a timely manner, unless otherwise directed by the City.

25. BINDING AGREEMENT:

The City and the WDC each bind themselves, and their successors, assigns and legal representatives to the other party to this Agreement and to the successors, assigns and legal representatives of such other party with respect to all covenants of this Agreement.

26. WAIVER:

Any waiver of the terms and conditions of this agreement by either of the parties hereto shall not be construed to be a waiver of any other term or condition of this agreement.

27. GOVERNING LAWS:

This Agreement, its terms and conditions and any claims arising there from shall be governed by the laws of the State of Connecticut.

28. NOTICE:

Except as otherwise specifically prohibited in this Agreement, whenever under this Agreement approvals, authorizations, determinations, notices, satisfactions or waivers are required or permitted, such items shall be effective and valid only when given in writing signed by a duly authorized officer of the City or the WDC, and delivered in hand or sent by mail, postage prepaid, to the party to whom it is directed, which until changed by written notice, are as follows:

WDC: Todd M. Montello, CEO
83 Bank Street, 3rd Floor
Waterbury, CT 06702

City: City of Waterbury
c/o Joseph Geary, Chief of Staff
Mayor's Office
235 Grand Street
Waterbury, CT 06702

29. ACKNOWLEDGMENTS, NOTICES AND REPRESENTATIONS:

The WDC shall supply the documents, data, studies, reports, specifications, deliverables, etc. under this Contract shall comply with all applicable Federal, State and Municipal statutes, regulations, charters, ordinances, rules, etc, whether or not they are expressly stated in this Contract, including but not limited to the following:

29.1 It shall be a material breach of this Contract, and, except as may be permitted by regulations or rulings of the City of Waterbury Board of Ethics, it shall be a violation of the City's Code of Ordinances, for any Public Official, City Employee or Member of a Board or Commission who is participating directly or indirectly in the procurement process as set forth in the City's Code of Ordinances, including those participating in exempt transactions, to become or be the employee of the WDC contracting with the governmental body by whom the Official, Employee, or Board or Commission member is employed or is a member.

29.2 It shall be a material breach of this Contract, and it shall be a violation of the City's Code of Ordinances for the WDC to offer, give, or agree to give any current or former Public Official, Employee or Member of a Board or Commission, or for such current or former Public Official, Employee or Member of a Board or Commission to solicit, demand, accept or agree to accept from the WDC, a gratuity or an offer of

employment in connection with any: decision; approval; disapproval; recommendation; preparation of any part of a Project requirement or a requisition; influencing the content of any specification or procurement standard; or rendering of advice, investigation, auditing, or in any other advisory capacity in any proceeding or application, request for ruling, determination, claim or controversy, or other particular matter, pertaining to any Project requirement or a Contract or Purchase Order, or to any solicitation or proposal therefore.

29.3 It shall be a material breach of this Contract and it shall be a violation of the City's Code of Ordinances for any payment, gratuity, or offer of employment to be made as an inducement for the award of a subcontract or order, by or on behalf of a subcontractor, the prime consultant/vendor or higher tier subcontractor or any person associated therewith, under a Contract or Purchase Order to the City.

29.4 The value of anything transferred or received in violation of the City's Charter, Code of Ordinances, and/or regulations promulgated there under, by the WDC subject to said Charter and/or Ordinances may be recovered by the City.

29.5 Upon a showing that a subcontractor made a kickback to the City, a prime consultant/vendor or a higher tier subcontractor in connection with the award of a subcontract or order there under, it shall be conclusively presumed that the amount thereof was included in the price of the subcontract or order and ultimately borne by the City and will be recoverable hereunder from the recipient. In addition, said value may also be recovered from the subcontractor making such kickbacks. Recovery from one offending party shall not preclude recovery from other offending parties.

29.6 It shall be a material breach of this Contract and it shall be a violation of the City's Code of Ordinances for the WDC to be retained, or to retain a person, to solicit or secure a contract with the City upon an agreement or understanding for a commission, percentage, brokerage, or contingent fee; and the WDC, before being awarded a City Contract, shall deliver to the City, on a City authored form, a representation that the WDC has not retained anyone in violation of this subsection, the failure to deliver said form being a material breach of this Contract and a violation of the City's Code of Ordinances. Note, however, this subsection shall not apply to full-time Employees who, as a condition of their employment, may be entitled to bonuses or other fees in accordance with their employment relationship.

29.7 The WDC hereby expressly represents that it has complied with those sections of the City's Code of Ordinances requiring that it has (1) delivered to the City an affidavit, on a City authored form, stating that the WDC and its affiliates have no delinquent taxes or other financial obligations owned to the City; (2) filed the City authored financial disclosure statement form as set forth in the City's Code of Ordinances regarding disclosure of financial interests; (3) delivered to the City a written acknowledgement, on a City authored form, evidencing receipt of a copy of the "Ethics and Conflict of Interest" ordinance for the City of Waterbury and hereby expressly represents that the WDC is in full compliance with the entirety of said Code of

Ordinances; and (4) filed a current list of all taxable personal and real property as required by the State of Connecticut General Statutes. Any violation of this subsection shall be deemed a material breach of this Contract and shall be a violation of the City's Code of Ordinances.

29.8 INTEREST OF CITY OFFICIALS. No member of the governing body of the City, and no other officer, employee, or agent of the City, who exercises any functions or responsibilities in connection with the carrying out of the project to which this agreement pertains, shall have any personal interest, direct or indirect, in this Agreement.

29.9 PROHIBITION AGAINST CONTINGENCY FEES. The Contractor hereby represents that it has not retained anyone to solicit or secure a contract with the City upon an agreement or understanding for a commission, percentage, brokerage or contingency fee.

29.10 FREEDOM OF INFORMATION ACT NOTICE. Pursuant to State statute, in the event the total compensation payable to the WDC set forth in Section 6 herein is greater than $2,500,000.00, the City is entitled to receive a copy of any and all WDC records and files related to the performance of this contract and those records and files are subject to the Freedom of Information Act ("the Act") and may be disclosed by the City pursuant to the Act.

30. CITY AND WDC DESIGNEES:

30.1 City Designee: The person in charge of administering the services described in this Agreement on behalf of the City ("City Representative") shall be the Mayor and/or his designee as set forth in writing to the WDC.

30.2 WDC Designee: The person responsible for the services to be performed by the WDC as described in this Agreement ("WDC Representative") shall be the Project Manager and the Chief Executive Officer of the WDC or any other individual authorized in writing by the City.

(End of text, signatures to follow)

IN WITNESS WHEREOF, the parties hereto execute this agreement on the dates signed below.

WITNESS:

Andrea Martelli

Patricia Hueson

CITY OF WATERBURY

By: _____
Neil M. O'Leary, Mayor

Date: 1/12/14

APPROVED AS TO FORM

Attorney, Corporation Counsel's Office

WITNESS:

Andrea Martelli

WATERBURY DEVELOPMENT CORPORATION

By: Todd M. Montello
Todd M. Montello, CEO
duly authorized

Date: 12 February 2014

ADDENDA

ADDENDUM A -	CDBG Program Statement of Work; Specific CDBG Certifications
ADDENDUM B -	HOME Program Statement of Work; Specific HOME Certifications
ADDENDUM C - Certifications	Emergency Solutions Grant Statement of Work; ESG
ADDENDUM D -	Project Management Scope of Services

ADDENDUM "A"
CDBG PROGRAM

I. STATEMENT OF WORK.

A. WDC Responsibilities. The WDC shall:

1. Administer all aspects of the CDBG Program for the City in a manner satisfactory to the City and to HUD and consistent with any and all relevant Federal, State, and City standards required by the City and/or by HUD as a condition of providing these funds;

2. Prepare and comply with Citizen Participation Schedule by reviewing all funding requests with the Citizen Advisory Committee;

3. Host all required public hearings;

4. Prepare the five-year Consolidated Plan along with the annual Plan for each program year of the five years of the Consolidated Plan in accordance with HUD regulations as set forth in 24 C.F.R. §91.200, et seq. (The principal components of the Consolidated/Annual Plan consist of an assessment of the community's affordable housing needs, non-housing needs, economic development, neighborhood facilities/infrastructure improvements, and supportive social services);

5. Meet the national objectives guiding the grants and the local use of the funds therefrom, principally to benefit low and moderate-income persons by providing decent housing and fostering a suitable living environment;

6. Publicize the consolidated Plan/Annual Plan, acquiring all required City board/commission approvals, the oversight board approval and submit the plan to HUD yearly for approval;

7. Prepare, in conjunction with the Consolidated/Annual Plan, the Environmental Review Record along with the Request for Release of Funds for all projects in the Consolidated Annual Plan;

8. Upon all funding acceptance and receipt, plan, review and administer all proposed projects. (Funds will be deposited with the City and subsequently transferred to the WDC);

9. Comply with all timeliness, procurement requirements, monitoring and Davis Bacon Wage requirements, when applicable for all proposed projects;

10. File all required reports to HUD regarding funding and project compliance (e.g. IDIS, Labor Reports, MBE reporting, and the ESG Bi-Annual report);

11. At the completion of each program year for the five-year Consolidated Plan, prepare, review and submit the Consolidated Annual Performance and Evaluation Report (CAPER); and

12. Undertake, conduct and perform any and all such other actions, function and/or activities which may be necessary or required to implement and comply with Federal, State and local law and HUD or State regulations relating to the CDBG Program.

B. City of Waterbury Responsibilities. The City shall:

1. Remain primarily responsible to HUD for the grants and programs provided under the Funding Approval/Agreements by and between the City and HUD;

2. Through the Office of the Mayor, prioritize the goals for expenditure of CDBG funds;

3. On a regular basis as required by Federal regulations, oversee and monitor the WDC operations and implementation of the HUD grants and programs;

4. Maintain oversight and control of the approval process for payments and disbursements of such payments as needed by the WDC; and

5. Designate and provide City personnel responsible for such oversight and monitoring, whose services relative to such monitoring shall be paid for from grant funds, as allowable.

II. RECORDS AND REPORTS.

A. Documentation and Record-Keeping.

1. **Records to be Maintained.** The WDC shall maintain all records (i) required by the Federal regulations specified in such regulations as are pertinent to the grants, programs and/or activities to be funded under this Agreement, and (ii) records specified herein. Such records shall include, but not be limited to:

a. Records providing a full description of each activity undertaken;;
b. Records on matching funds, if applicable;
c. Records demonstrating that each activity undertaken meets the objectives of the pertinent grant or program;

d. Records required to determine the eligibility of activities;
e. Records required to document the acquisition, improvement, use or disposition of real property acquired or improved with grant program funds;
f. records documenting compliance with the fair housing and equal opportunity components of the pertinent grant or program; and
g. All other records necessary to document funding and project compliance with relevant law as set forth in Section I.1 hereof.

2. **Retention.** The WDC shall retain all records pertinent to the expenditures incurred under this Agreement for a period of four (4) years after the termination of all activities funded under this Agreement. Records for non-expendable property acquired with funds under this contact shall be retained for four (4) years after final disposition of such property. Records for any displaced person must be kept for four (4) years after he/she has received final payment. Notwithstanding the above, in the event of litigations, claims, audits, negotiations or other actions that involve any of the records cited and that have started before the expiration of the four (4) year period, such records shall be retained until completion of the actions and resolution of all issues, or the expiration of the four (4) year period, whichever occurs later.

3. **Client Data.** The WDC shall maintain client data demonstrating client eligibility for services provided. Such data shall include, but not be limited to, client name, address, income level or other basis for determining eligibility, and description of service provided. Such information shall be made available to the City upon request.

4. **Disclosure.** The WDC understands that client information collected under this Agreement is private and the use or disclosure of such information, when not directly connected with the administration of the City's or WDC's responsibilities with respect to services provided under this Agreement, is prohibited unless prior written consent is obtained from such person receiving service or from a responsible parent/guardian in the case of a minor receiving service or otherwise as required by applicable law.

5. **Property Records.** The WDC shall maintain real property inventory records, which clearly identify properties purchases, improved or sold. Properties retained shall continue to meet eligibility criteria and shall conform to the "changes in use" restrictions specified in applicable regulations. WDC shall further maintain records, which clearly identify any and all personal property and/or fixtures purchased, improved or sold.

6. **Close-Outs.** The WDC's obligation to the City shall not end until all close-out requirements are completed. Activities during this close-out period shall include, but are not limited to, making final payments, disposing or program assets (including the return of all unused materials, equipment, unspent cash advances,

program income balances and accounts receivable to the City), and determine the custodianship of records.

7. **Audits and Inspections.** All WDC records with respect to any matters covered by this Agreement shall be made available to the City, its designee(s) or the Federal Government, at any time during normal business hours, as often as the City deems necessary , to audit, examine, and make excerpts or transcripts of all relevant data. In accordance with applicable regulations and law, the WDC hereby agrees to conduct an annual audit.

THE WDC HEREBY AGREES TO HAVE AN ANNUAL AUDIT CONDUCTED IN ACCORDANCE WITH the "SINGLE AUDIT AMENDMENTS ACT" and the OFFICE OF MANAGEMENT AND BUDGET (OMB) CIRCULAR NO. A-133, titled "AUDITS OF STATE, LOCAL GOVERNMENTS AND NON-PROFIT ORGANIZATIONS" AND SUBMIT A COPY OF THIS AUDIT TO THE CITY WITHIN THIRTY (30) DAYS OF COMPLETION OF SAID AUDIT.

Any deficiencies noted in any audit report(s) shall be fully cleared and remedied by the WDC within thirty (30) calendar days of the City's receipt of such audit report.

Failure of the WDC to comply with this subsection shall be deemed a material breach of this Agreement.

8. **Financial Statements.** WDC shall provide City with audited financial statements for the most recent tax year prior to the start date specified in Section II above, if applicable.

9. **Employee Verification.** All WDC records with respect to WDC employees, including, but not limited to (i) time sheets, (ii) payroll, (iii) cancelled checks, (iv) etc., shall be made available to the City at any time during normal City business hours. The City shall be entitled to interview WDC employees to verify employment information at any time during the WDC's normal business hours as often as City deems necessary.

III. PROGRAM INCOME.

A. Program Income. The WDC shall promptly remit any and all program income, if any, to the City.

IV. UNIFORM ADMINISTRATIVE REQUIRMENTS. WDC shall comply with applicable uniform administrative requirements, as described in 24 C.F.R. §570.502.

V. OTHER PROGRAM REQUIREMENTS. WDC shall carry out each activity in compliance with all Federal laws and regulations described in 24 C.F.R. Part 570, Subpart K, except that:

A. The WDC does not assume the City's environmental responsibilities described at 24 C.F.R. §570.604; and

B. The WDC does not assume the City's responsibility for initiating the review process under the provisions of 24 C.F.R. Part 52.

VI. SUSPENSION AND TERMINATION. In accordance with 24 C.F.R. §85.43, suspension or termination may occur if the WDC materially fails to comply with any term of the award, and that the award may be terminated for convenience in accordance with 24 C.F.R. §85.44.

VII. REVERSION OF ASSETS. Upon the expiration of this Agreement by termination or otherwise, the WDC shall transfer to the City any CDBG funds on hand at the time of expiration and any accounts receivable attributable to the use of CDBG funds. Further, any real property under the WDC control that was acquired or improved in whole or in part with CDBG funds (including CDBG funds provided to the WDC in the form of a loan) in excess of $25,000.00 shall either:

A. Be used to meet on of the national objectives in 24 C.F.R. §570.208 (formerly §570.901) until five years after expiration of the agreement, or for such longer period of time as determined to be appropriate by the City; or

B. If the WDC determines, after consultation with any affected citizens, that it is appropriate to change the use of the property to a use which does not qualify under Paragraph VII A of this section it may retain or dispose of the property for the changed use if the CDBG program is reimbursed in the amount of the current fair market value of the property, less any portion of the value attributable to expenditures of non-CDBG funds for acquisition of, and improvement to, the property. If the change of use occurs after closeout, the provisions governing income from the disposition of the real property in 24 C.F.R. §570.504(b)(4) and (5), as applicable, shall apply to the use of funds reimbursed. Following the reimbursement of the CDBG program in accordance with the Paragraph VII B hereof, the property no longer will be subject to any CDBG requirements.

ADDENDUM "B"
HOME PROGRAM

I. STATEMENT OF THE WORK.

A. WDC Responsibilities. The WDC shall:

1. Administer all aspects of the HOME Program for the City in a manner satisfactory to the City and to HUD and consistent with any and all relevant Federal, State, and City standards required by the City and/or by HUD as a condition of providing these funds;

2. Prepare and comply with the Citizen Participation Schedule by reviewing all line item allocations with the Citizen Advisory Committee;

3. Host all required public hearings;

4. Prepare the five-year Consolidated Plan along with the Annual Plan for each program year of the five years of the Consolidated Plan in accordance with HUD regulations as set forth in 24 C.F.R. §91.200, et seq. (The principal components of the Consolidated/Annual Plan consist of an assessment of the community's affordable housing needs, non-housing needs, economic development, neighborhood facilities/infrastructure improvements, and supportive social services);

5. Meet the national objectives guiding the grants and the local use of the funds therefrom, principally to benefit low and moderate-income persons by providing decent housing and fostering a suitable living environment;

6. Publicize the Consolidated Plan/Annual Plan, acquiring all required City board/commission approvals, the oversight board approval and submit the plan to HUD yearly for approval;

7. Prepare, in conjunction with the Consolidated/Annual Plan, the Environmental Review Record along with the Request for Release of Funds for all projects in the Consolidated Annual Plan;

8. Upon all funding acceptance and receipt, plan, review and administer all proposed projects. (Funds will be deposited with the City and subsequently transferred to the WDC);

9. Comply with all timelines, procurement requirements, monitoring and Davis Bacon Wage requirements, when applicable for all proposed projects;

10. File all required reports to HUD regarding funding and project compliance (e.g. IDIS, Labor Reports, MBE reporting, and the ESG Bi-Annual Report);

11. At the completion of each program year for the five-year Consolidated Plan, prepare, review and submit the Home Annual Performance Report; and

12. Undertake, conduct and perform any and all such other actions, functions and/or activities which may be necessary or required to implement and comply with Federal, State and local law and HUD or State regulations relating to the HOME program.

B. City of Waterbury Responsibilities. The City shall:

1. Remain primarily responsible to HUD for the grants and programs provided under the Funding Approval/Agreements by and between the City and HUD;

2. On a regular basis as required by Federal regulations, oversee and monitor the WDC operations and implementation of the HUD grants and programs;

3. Maintain oversight and control of the approval process for payments and disbursement of such payments as needed by the WDC; and

4. Designate and provide City personnel responsible for such oversight and monitoring.

II. PROGRAM INCOME.

A. Program Income. The WDC shall promptly remit any and all program income, if any, to the City.

III. UNIFORM ADMINISTRATIVE REQUIREMENTS. WDC shall comply with applicable uniform administrative requirements, as describe in 24 C.F.R. §92.505.

IV. OTHER PROGRAM REQUIREMENTS. WDC shall carry out each activity in compliance with all Federal laws and regulations described in 24 C.R.F. Part 92, Subpart H, except that:

A. The WDC does not assume the City's responsibilities for environmental review under 24 C.F.R. §92.352; and

B. The intergovernmental review process in 24 C.F.R. §92.357 does not apply.

V. AFFIRMATIVE MARKETING. If the HOME funds administered by the WDC are used for housing containing five or more assisted units, WDC shall comply with the affirmative marketing responsibilities set forth in 24 C.F.R. §92.351.

VI. REQUESTS FOR DISBURSEMENT OF FUNDS. WDC may not request disbursement of funds under this agreement until the funds are needed for payment of eligible costs. The amount of each request must be limited to the amount needed.

VII. REVERSION OF ASSETS. Upon the expiration of this Agreement by termination or otherwise, the WDC shall transfer to the City and HOME funds on hand at the time of expiration and any accounts receivable attributable to the use of HOME funds.

VIII. RECORDS AND REPORTS.

A. Documentation and Record-Keeping.

1. **Records to be Maintained.** The WDC shall maintain all records (i) required by the Federal regulations specified in such regulations as are pertinent to the grants, programs and/or activities to be funded under this Agreement, and (ii) records specified herein. Such records shall include, but not be limited to:

a. Records providing a full description of each activity undertaken;;
b. Records on matching funds, if applicable;
c. Records demonstrating that each activity undertaken meets the objectives of the pertinent grant or program;
d. Records required to determine the eligibility of activities;
e. Records required to document the acquisition, improvement, use or disposition of real property acquired or improved with grant program funds;
f. records documenting compliance with the fair housing and equal opportunity components of the pertinent grant or program; and
g. All other records necessary to document funding and project compliance with relevant law as set forth in Section I.1 hereof.

2. **Retention.** The WDC shall retain all records pertinent to the expenditures incurred under this Agreement for a period of four (4) years after the termination of all activities funded under this Agreement. Records for non-expendable property acquired with funds under this contact shall be retained for four (4) years after final disposition of such property. Records for any displaced person must be kept for four (4) years after he/she has received final payment. Notwithstanding the above, in the event of litigations, claims, audits, negotiations or other actions that involve any of the records cited and that have started before the expiration of the four (4) year period, such records shall be retained until completion of the actions and resolution of all issues, or the expiration of the four (4) year period, whichever occurs later.

3. **Client Data.** The WDC shall maintain client data demonstrating client eligibility for services provided. Such data shall include, but not be limited to, client name, address, income level or other basis for determining eligibility, and description of service provided. Such information shall be made available to the City upon request.

4. **Disclosure.** The WDC understands that client information collected under this Agreement is private and the use or disclosure of such information, when not directly connected with the administration of the City's or WDC's responsibilities with respect to services provided under this Agreement, is prohibited unless prior written consent is obtained from such person receiving service or from a responsible parent/guardian in the case of a minor receiving service or otherwise as required by applicable law.

5. **Property Records.** The WDC shall maintain real property inventory records, which clearly identify properties purchases, improved or sold. Properties retained shall continue to meet eligibility criteria and shall conform to the "changes in use" restrictions specified in applicable regulations. WDC shall further maintain records, which clearly identify any and all personal property and/or fixtures purchased, improved or sold.

6. **Close-Outs.** The WDC's obligation to the City shall not end until all close-out requirements are completed. Activities during this close-out period shall include, but are not limited to, making final payments, disposing or program assets (including the return of all unused materials, equipment, unspent cash advances, program income balances and accounts receivable to the City), and determine the custodianship of records.

7. **Audits and Inspections.** All WDC records with respect to any matters covered by this Agreement shall be made available to the City, its designee(s) or the Federal Government, at any time during normal business hours, as often as the City deems necessary , to audit, examine, and make excerpts or transcripts of all relevant data. In accordance with applicable regulations and law, the WDC hereby agrees to conduct an annual audit.

THE WDC HEREBY AGREES TO HAVE AN ANNUAL AUDIT CONDUCTED IN ACCORDANCE WITH the "SINGLE AUDIT AMENDMENTS ACT" and the OFFICE OF MANAGEMENT AND BUDGET (OMB) CIRCULAR NO. A-133, titled "AUDITS OF STATE, LOCAL GOVERNMENTS AND NON-PROFIT ORGANIZATIONS" AND SUBMIT A COPY OF THIS AUDIT TO THE CITY WITHIN THIRTY (30) DAYS OF COMPLETION OF SAID AUDIT.

Any deficiencies noted in any audit report(s) shall be fully cleared and remedied by the WDC within thirty (30) calendar days of the City's receipt of such audit report.

Failure of the WDC to comply with this subsection shall be deemed a material breach of this Agreement.

8. **Financial Statements.** WDC shall provide City with audited financial statements for the most recent tax year prior to the start date specified in Section II above, if applicable.

9. **Employee Verification.** All WDC records with respect to WDC employees, including, but not limited to (i) time sheets, (ii) payroll, (iii) cancelled checks, (iv) etc., shall be made available to the City at any time during normal City business hours. The City shall be entitled to interview WDC employees to verify employment information at any time during the WDC's normal business hours as often as City deems necessary.

IX. ENFORCEMENT OF THE AGREEMENT. In accordance with 24 C.F.R. §85.43, suspension or termination may occur if the WDC materially fails to comply with any term of this agreement, and further, this agreement may be terminated for convenience in accordance with 24 C.F.R. §85.44.

X. WRITTEN AGREEMENTS. If the WDC provides HOME funds to for-profit owners or developers, nonprofit owners or developers, sub-recipient, homeowners, home-buyers, tenants receiving tenant-based rental assistance or contractors, the WDC must have a written agreement which meets the requirements of 24 C.F.R. §92.504.

ADDENDUM "C"
EMERGENCY SOLUTIONS GRANTS

I. STATEMENT OF THE WORK.

A. WDC Responsibilities. The WDC shall:

1. Administer all aspects of the ESG Program for the City in a manner satisfactory to the City and to HUD and consistent with any and all relevant Federal, State and City standards required by the City and/or by HUD as a condition of providing these funds;

2. Prepare and comply with the Citizen Participation Schedule by reviewing all funding requests with the Citizen Advisory Committee;

3. Host all required public hearings;

4. Prepare the five-year Consolidated Plan along with the Annual Plan for each program year of the five year of the Consolidated Plan in accordance with HUD regulations as set forth in 24 C.F.R. §91.200, et seq. (The principal components of the Consolidated/Annual Plan consist of an assessment of the community's affordable housing needs, non-housing needs, economic development, neighborhood facilities/infrastructure improvements, and supportive social services);

5. Meet the national objectives guiding the grants and the local use of the funds therefrom, principally to benefit low and moderate-income persons by providing decent housing and fostering a suitable living environment;

6. Publicize the Consolidated Plan/Annual Plan, acquiring all required City board/commission approvals, the oversight board approval and submit the plan to HUD yearly for approval;

7. Prepare, in conjunction with the Consolidated/Annual Plan, the Environmental Review Record along with the Request for Release of Funds for all projects in the Consolidated Annual Plan;

8. Upon all funding and receipt, plan, review and administer all proposed projects. (Funds will be deposited with the City and subsequently transferred to the WDC);

9. Comply with all timeliness, procurement requirements, monitoring and Davis Bacon Wage requirements, when applicable for all proposed projects;

10. File all required reports to HUD regarding funding and project compliance (e.g. IDIS, Labor Reports, MBE reporting, and the ESG Bi-Annual Report);

11. At the completion of each program year for the five-year Consolidated Plan, prepare, review and submit the Consolidated Annual Performance and Evaluation Report (CAPER); and

12. Undertake, conduct and perform any and all such other actions, functions and/or activities which may be necessary or required to implement and comply with Federal, State and local law and HUD or State regulations relating to the ESG Program.

B. City of Waterbury Responsibilities. The City shall:

1. Remain primarily responsible to HUD for the grants and programs provided under the Funding Approval/Agreements by and between the City and HUD;

2. On a regular basis as required by Federal regulations, oversee and monitor the WDC operations and implementation of the HUD grants and programs;

3. Maintain oversight and control of the approval process for payments and disbursement of such payments as needed by the WDC; and

4. Designate and provide City personnel responsible for such oversight and monitoring.

II. PROGRAM INCOME.

A. Program Income. The WDC shall promptly remit any and all program income, if any, to the City.

III. REQUESTS FOR DISBURSEMENT OF FUNDS. WDC may not request disbursement of funds under this agreement until the funds are needed for payment of eligible costs. The amount of each request must be limited to the amount needed.

IV. REVERSION OF ASSETS. Upon the expiration of this Agreement by termination or otherwise, the WDC shall transfer to the City any ESG funds on hand at the time of expiration and any accounts receivable attributable to the use of ESG funds.

V. RECORDS AND REPORTS.

A. Documentation and Record-Keeping.

1. **Records to be Maintained.** The WDC shall maintain all records (i) required by the Federal regulations specified in such regulations as are pertinent to the grants, programs and/or activities to be funded under this Agreement, and (ii) records specified herein. Such records shall include, but not be limited to:

a. Records providing a full description of each activity undertaken;;
b. Records on matching funds, if applicable;
c. Records demonstrating that each activity undertaken meets the objectives of the pertinent grant or program;
d. Records required to determine the eligibility of activities;
e. Records required to document the acquisition, improvement, use or disposition of real property acquired or improved with grant program funds;
f. records documenting compliance with the fair housing and equal opportunity components of the pertinent grant or program; and
g. All other records necessary to document funding and project compliance with relevant law as set forth in Section I.1 hereof.

2. **Retention.** The WDC shall retain all records pertinent to the expenditures incurred under this Agreement for a period of four (4) years after the termination of all activities funded under this Agreement. Records for non-expendable property acquired with funds under this contact shall be retained for four (4) years after final disposition of such property. Records for any displaced person must be kept for four (4) years after he/she has received final payment. Notwithstanding the above, in the event of litigations, claims, audits, negotiations or other actions that involve any of the records cited and that have started before the expiration of the four (4) year period, such records shall be retained until completion of the actions and resolution of all issues, or the expiration of the four (4) year period, whichever occurs later.

3. **Client Data.** The WDC shall maintain client data demonstrating client eligibility for services provided. Such data shall include, but not be limited to, client name, address, income level or other basis for determining eligibility, and description of service provided. Such information shall be made available to the City upon request.

4. **Disclosure.** The WDC understands that client information collected under this Agreement is private and the use or disclosure of such information, when not directly connected with the administration of the City's or WDC's responsibilities with respect to services provided under this Agreement, is prohibited unless prior written consent is obtained from such person receiving service or from a responsible parent/guardian in the case of a minor receiving service or otherwise as required by applicable law.

5. **Property Records.** The WDC shall maintain real property inventory records, which clearly identify properties purchases, improved or sold. Properties retained shall continue to meet eligibility criteria and shall conform to the "changes in use" restrictions specified in applicable regulations. WDC shall further maintain records, which clearly identify any and all personal property and/or fixtures purchased, improved or sold.

6. **Close-Outs.** The WDC's obligation to the City shall not end until all close-out requirements are completed. Activities during this close-out period shall include, but are not limited to, making final payments, disposing or program assets (including the return of all unused materials, equipment, unspent cash advances, program income balances and accounts receivable to the City), and determine the custodianship of records.

7. **Audits and Inspections.** All WDC records with respect to any matters covered by this Agreement shall be made available to the City, its designee(s) or the Federal Government, at any time during normal business hours, as often as the City deems necessary , to audit, examine, and make excerpts or transcripts of all relevant data. In accordance with applicable regulations and law, the WDC hereby agrees to conduct an annual audit.

THE WDC HEREBY AGREES TO HAVE AN ANNUAL AUDIT CONDUCTED IN ACCORDANCE WITH the "SINGLE AUDIT AMENDMENTS ACT" and the OFFICE OF MANAGEMENT AND BUDGET (OMB) CIRCULAR NO. A-133, titled "AUDITS OF STATE, LOCAL GOVERNMENTS AND NON-PROFIT ORGANIZATIONS" AND SUBMIT A COPY OF THIS AUDIT TO THE CITY WITHIN THIRTY (30) DAYS OF COMPLETION OF SAID AUDIT.

Any deficiencies noted in any audit report(s) shall be fully cleared and remedied by the WDC within thirty (30) calendar days of the City's receipt of such audit report.

Failure of the WDC to comply with this subsection shall be deemed a material breach of this Agreement.

8. **Financial Statements.** WDC shall provide City with audited financial statements for the most recent tax year prior to the start date specified in Section II above, if applicable.

9. **Employee Verification.** All WDC records with respect to WDC employees, including, but not limited to (i) time sheets, (ii) payroll, (iii) cancelled checks, (iv) etc., shall be made available to the City at any time during normal City business hours. The City shall be entitled to interview WDC employees to verify

employment information at any time during the WDC's normal business hours as often as City deems necessary.

VI. ENFORCEMENT OF THE AGREEMENT. In accordance with 24 C.F.R. §85.43, suspension or termination may occur if the WDC materially fails to comply with any term of this agreement, and further, this agreement may be terminated for convenience in accordance with 24 C.F.R. §85.44.

VII. WRITTEN AGREEMENTS. If the WDC provides HOME funds to for-profit owners or developers, nonprofit owners or developers, sub-recipient, homeowners, home-buyers, tenants receiving tenant-based rental assistance or contractors, the WDC must have a written agreement which meets the requirements of 24 C.F.R. §92.504.

ADDENDUM "D"
Project Management Scope of Services

1. **Scope of Services.**

A. The WDC shall furnish all of the labor, services, reports, plans, specifications necessary for completion of the Designated Project or Designated Program as specified in a PAL and such shall be completed in a satisfactory manner, as reasonably determined by the City.

B. The WDC will provide such services through the WDC's Administrative and Project Management staff. Where the City determines that additional onsite support staff is required to address City priorities, the WDC will prepare a revised staffing proposal and obtain City approval prior to incurring costs or assigning additional staff. The WDC shall make such revisions or modifications to a PAL as may be required by the City. Revisions or modifications to a PAL required as a result of an error by the WDC will be done at the WDC's sole cost and expense.

C. The WDC shall designate a Project Manager for each Designated Project or Designated Program as the contact person between the City, Mayor's Office, Mayor's Office Staff, City Boards and WDC. The Project Manager shall perform all day to day operations, on site coordination, and decision making with regards to the project. Attendance at Board or Commission meetings or otherwise shall be by the Project Manager, or the CEO of WDC unless another individual is authorized by the City to do so.

D. In performing the services required under this Agreement, the WDC shall consult with the City's designee, as hereinafter set forth, and shall meet, as appropriate, and as directed by the City, with other City employees or officials and with other persons or entities, as necessary, including State and Federal officials and/or neighborhood groups or organizations.

2. **WDC Representations Regarding Qualification and Accreditation.** The WDC represents that, to the extent required by law, its employees are licensed to perform the Work set forth in this Agreement. The WDC further represents that its employees have the requisite skill, expertise and knowledge reasonably necessary to perform the Work required under the terms each PAL, including any supplementary work, and acknowledges that the City relies upon these representations.

A. Representations regarding Personnel. The WDC represents that it has, or will secure at its own expense, all personnel required to perform the services under this agreement. Such personnel shall not be employees of or have any

contractual relationship with the City, unless use of City employees or of personnel having a contractual relationship with the City is approved by the City in writing. As set forth above or unless otherwise provided, all the services required hereunder shall be performed by the WDC under its supervision and all personnel engaged in the work shall be fully qualified and shall be authorized or permitted under state or local law to perform such services.

B. Representations regarding Qualifications. The WDC hereby represents that, to the extent required by Federal, State and Local statutes, regulations, codes, ordinances, and policies, the WDC and/or its employees are licensed, certified, registered, or otherwise qualified, and that the WDC and all employees providing services under this Agreement, are in full compliance with those statutes, regulations and ordinances. Upon City request, the WDC shall provide to the City a copy of the WDC's and/or its employees' licenses, certifications, registrations, etc.

3. **Responsibilities of the WDC.** All data, information, etc. given by the City to the WDC and/or created by the WDC shall be treated by the WDC as proprietary to the City and confidential, unless the City agrees in writing to the contrary, and shall be used solely for the purposes of providing services under this agreement. The WDC agrees to forever hold in confidence all files, records, documents and other information, which may come into the WDC's possession during the term of this agreement, except where a disclosure is expressly stated as a requirement of this agreement. Notwithstanding the foregoing, where a WDC disclosure is required to comply with statute, regulation, or court order, the WDC shall provide prior advance written notice to the City of the need for such disclosure. The WDC agrees to properly implement the services required in the manner herein provided. If a request under the Freedom of Information Act is made to the WDC for information which is rendered by this Agreement as confidential or proprietary to the City, the WDC shall notify the City of the request, and the City thereafter shall be responsible for responding, with the cooperation of the WDC.

A. Use of City Property. To the extent the WDC is required to be on City property to render its services hereunder, the WDC shall have access to such areas of City property as the City and the WDC agree are necessary for the performance of the WDC's services under this agreement (the "Site" or the "Premises") and at such times as the City and the WDC may mutually agree. The WDC shall perform all work in full compliance with Local, State and Federal health and safety regulations. All work hereunder shall be performed in a safe manner. The WDC shall immediately correct any dangerous condition caused by or resulting from its Work. If it fails to correct, or to act diligently to correct, any condition which the City reasonably believes to be a hazard to persons or property, then immediately upon oral or written notice to any supervisory or similar personnel of the WDC, the City may, but shall not be required to, correct same at the WDC's expense. The City shall confirm in writing any oral notice given within two (2) days thereafter.

B. Working Hours. To the extent the WDC is required to be on City property to render its services hereunder, the WDC shall coordinate its schedule so that work on the Premises is performed during those hours the City sets forth in a written notice to the WDC, unless written permission is obtained from the City to work during other times. This condition shall not excuse the WDC from timely performance under the Contract. The work schedule must be agreed upon by the City and the WDC.

C. Cleaning Up. To the extent the WDC is required to be on City property to render its services hereunder, the WDC shall at all times keep the premises free from accumulation of waste materials or rubbish caused by the WDC, its employees or subcontractors, and at the completion of the work shall remove all rubbish from and about the project and all tools, scaffolding and surplus materials and shall leave the Premises "broom clean" or its equivalent, unless more exactly specified. In case of dispute, the City may remove the rubbish and charge the cost to the WDC.

D. Publicity. The WDC agrees not to deliberately disclose the fact that the City has terminated this agreement or disclose any of the terms of the agreement or use the City's name in connection with any publicity, unless the City gives prior written consent to such use of the City's name in each instance.

E. Standard of Performance. All workmanship, services, materials or equipment provided by WDC to complete a PAL, either at the Premises or intended for it, shall conform in all respects with the requirements of the applicable PAL, and shall be the best obtainable from the crafts and trades within the constraints of the PAL budget. In all cases, the services, materials, equipment, reports, plans, specifications, deliverables, workmanship, etc. shall be equal to or better than the grade specified. The standard of care and skill for all services performed by the WDC shall be that standard of care and skill ordinarily used by other members of the WDC's profession practicing under the same or similar conditions at the same time and in the same locality. The WDC's services rendered hereunder shall be rendered completely and by qualified personnel in accordance with standard industry practice.

F. Due Diligence Obligation. The WDC acknowledges its responsibilities to examine and to be thoroughly familiar with the Project and the Program Management Scope of Services, as set forth herein and each individual PAL Agreement. The WDC agrees it will perform commercially reasonable investigation of the physical items, facilities, services or functions essential to the satisfactory performance of each PAL that may be entered into pursuant to this Agreement ("Due Diligence") and hereby certifies that all such items, facilities, services or functions are included in this agreement and hereby warrants that:

(1) It will conduct Due Diligence and, accordingly, any additional costs, services or products resulting solely from the failure of the WDC to complete Due Diligence that is commercially reasonable under the nature or circumstances of a PAL shall be borne by the WDC.

(2) Its failure or omission to make investigation and verification of data shall, in no way, be cause for future claim of ignorance of such data or conditions nor shall such failure to investigate and verify be the basis for any claim whatsoever, monetary or otherwise, other than those that are not reasonably foreseeable;

(3) It is solely responsible for resolving any issues resulting from the failure to conduct Due Diligence that is commercially reasonable under the nature and or circumstances and shall assume any costs that may result during the implementation of a PAL, including, but not limited to, adherence to specifications and pricing for the Project.

(4) It is responsible for specifying any changes and disclosing any new costs. Thus, in the event any changes or costs are disclosed by the WDC, or otherwise required, during the performance of its services, the sole responsibility for any modification, delay and cost of such changes shall reside with the WDC.

(5) It will familiarize itself with the nature and extent of the Contract Documents, work anticipated by a PAL, the locality, and with all local conditions and Federal, State and Local laws, ordinances, rules and regulations that in any manner may affect cost, progress or performance of the Work;

(6) It will give the City written notice of any conflict, error or discrepancy that the WDC discovers in the documents; and

G. Reporting Requirement. The WDC shall deliver written reports upon request to the City setting forth (i) the issue date of the report, (ii) the time period covered by the report, (iii) a brief description of the work and services completed by the WDC and/or delivered by the WDC during the time period covered by the report, (iv) the WDC's declaration as to whether the entirety of the WDC's work and services required in this Agreement will be, or will not be, completed within the contract's Section 6 total compensation amount, and (v) any and all additional useful and/or relevant information. Each report shall be signed by the WDC's Chief Executive Officer.

NOTE, the WDC's failure to deliver any report required herein shall be deemed a material breach of this contract, the City hereby reserving the right to exercise all available legal remedy(ies) to address said breach.

4. **Responsibilities of the City.** Upon the City's receipt of WDC's written request, the City will provide the WDC with all documents, data and other materials reasonably necessary and appropriate to the work to be performed by the WDC under a PAL and the City will endeavor to secure, where feasible and where the City agrees it is necessary and appropriate, materials or information from other sources requested by the WDC for the purpose of carrying out the services under a PAL. The City acknowledges that the Work is advisory and collaborative in nature, that the City is responsible for the timely making of final decisions required by Exhibit B, and that completion of the work contemplated by a PAL requires reasonable cooperation from the City.

EXHIBITS

EXHIBIT A - City Ordinances
§31.269 – WDC Designation of Authority
§38.020-38.071 – Solicitation and Award Methods of Source Selection
§34.15-34.22 – Hiring of Waterbury Residents on Certain Publicly-Funded Construction Projects and as further amended from time-to-time

EXHIBIT B - U.S. Department of Housing and Urban Development
SF 424 – Certifications

EXHIBIT C - CFR Procurement Requirements
24 C.F.R. §84.40 – 84.48

EXHIBIT D - List of Current WDC Projects

EXHIBIT "A"

§31.269 – WDC Designation of Authority

§38.020-38.071 – Solicitation and Award Methods of Source Selection

§34.15-34.22 – Hiring of Waterbury Residents on Certain Publicly-Funded Construction Projects and as further amended from time-to-time

responsible for the day-to-day operation of the WDC and shall see that all actions of the Board are carried into effect.

(B) The CEO shall be knowledgeable regarding municipal economic development and housing matters and shall be hired upon specifications and qualifications set by the Board.

(C) The CEO shall, subject to the by-laws of the WDC, hire employees, staff and consultants, and purchase good and services and construction necessary for the discharge of the duties of his office and the WDC as the CEO deems necessary and/or advisable within the limits of any sums appropriated for those purposes.

(D) The CEO shall report monthly to the Board on the conduct and management of the affairs of the WDC and shall also perform such other duties as are usual and customary to this office.
(Ord. passed 3-7-2005)

§ 31.268 CONDUCT OF BUSINESS.

(A) The WDC shall keep and maintain a regular place of business within the city, which shall be open for business on a customary business schedule.

(B) The WDC shall, at all times, comply and comport itself in accordance with all applicable laws and regulations, as such may be amended, supplemented or replaced.
(Ord. passed 3-7-2005)

§ 31.269 DESIGNATIONS OF AUTHORITY.

(A) The WDC is hereby designated as the city's:

(1) Development Agency, pursuant to Conn. Gen. Stat. § 8-188;

(2) Implementing Agency, pursuant to Conn. Gen. Stat. § 32-224;

(3) Housing Site Development Agency, pursuant to Conn. Gen. Stat. § 8-216b; and

(4) Community Development Agency, pursuant to Conn. Gen. Stat. § 8-169b(c).

(B) Further, the WDC is authorized and empowered to administer, supervise, implement and control the city's:

(1) Enterprise Zone, pursuant to Conn. Gen. Stat. §§ 32-70 *et seq.* and §§ 152.02 *et seq.* of the city code; and

(2) Information Technology Zone (the "ITZ"), pursuant to Conn. Gen. Stat. § 12-65b.

(C) Other projects.

(1) Notwithstanding the provisions of Chapter 38 of the code of ordinances of the city, whenever requested by the Mayor and approved by resolution of the Board of Aldermen, on a project-by-project basis, the WDC is hereby designated, appointed and authorized to act on behalf of the city in the capacity of general contractor, project manager, construction manager, design builder, owner's representative and/or in such other similar development or construction capacity or capacities as may be designated by the Mayor and the Board of Aldermen, for purposes of city-funded construction and/or rehabilitation projects, thereby enabling the city to utilize the WDC's expertise in project design, development and/or management, without the requirement or necessity of a bid.

(2) Further, when requested by the Mayor and approved by resolutions of the Board of Aldermen and the Waterbury Board of Education, on a project-by-project basis, the WDC is hereby designated, appointed and authorized and may perform in the same capacity or capacities as set forth above for any city school construction and/or rehabilitation project.

(3) In any such project as set forth herein, the WDC shall only be allowed to collect and the city shall only be required to pay for the reasonable administrative and out-of pocket costs and expenses of the WDC's services, without the addition or inclusion of any profit. The WDC shall divulge the total estimated amount of such administrative costs and expenses for each such project to the Mayor, the Board of Aldermen and, when appropriate, the Waterbury Board of Education before such designation, appointment and/or approval is made. In furtherance of the disclosure, the WDC shall retain and make all of its books and records available for inspection by the city or its designee, before and throughout the project and for such period of time after its completion as shall be reasonably required to enable the city to comply with any federal, state and/or local law, ordinance or regulation regarding the auditing of the project.

(4) Any procurement, (as such term is defined in § 38.002 of the code of ordinances of the city) by the WDC in connection with work authorized by this section shall be conducted in accordance with the Centralized Procurement System Ordinance of the city (Chapter 38 of the Code of Ordinances of the city) and be performed by or under the direction and supervision of the City's Director of Purchasing, in his sole discretion.

(D) In accordance with such designations, appointments and authorizations, the WDC shall possess, utilize, exercise and discharge all powers and duties granted to it pursuant to the delineated and associated provisions of the state general statutes and/or the Charter and ordinances of the city, as such may be amended, supplemented or replaced, from time to time, in the best interests of the city. (Ord. passed 3-7-2005)

(3) *Cause for removal or termination of employment.* If any public official or employee of the city shall knowingly incur any obligation or shall authorize or make any expenditure in violation of this provision, the action shall be cause for removal from office or termination of employment.
(Ord. passed 6-20-2005)

§ 38.005 PREPARATION OF SPECIFICATIONS.

(A) *Generally.* In accordance with the schedule or any regulations or policies established by the Director of Purchasing, the using agency shall prepare specifications (including, but not limited to, standard terms and conditions), which shall be attached or included in the bid or proposal documents set forth herein.

(1) *Assistance to the using agencies.* The Director of Purchasing may retain or authorize the retention of expert advisors to assist the using agencies.

(2) *Maximum practicable competition.* All specifications shall seek to promote overall economy for the purposes intended and encourage competition in satisfying the city's needs, and shall not be unduly restrictive.

(3) *Specifications prepared by other than city personnel.* The requirements of this chapter regarding standards established for the specifications shall apply to all specifications prepared by city and non-city personnel, including, but not limited to, those prepared by architects, engineers and designers.

(B) *The role of the Director of Purchasing.* The Director of Purchasing shall monitor use of specifications for commodities, services and construction required by the Department of Purchases. Moreover, the Director of Purchasing, is authorized to issue regulations or policies as a means of setting standards for the preparation, maintenance and content of specifications for commodities, services and construction items required by the city.
(Ord. passed 6-20-2005)

PROCUREMENT PROCESS: SOLICITATION AND AWARD; METHODS OF SOURCE SELECTION

§ 38.020 METHODS OF SOURCE SELECTION.

Unless otherwise authorized by, the Charter of the city or this code, all contracts and purchase orders shall be awarded by one of the following methods:

(A) Competitive sealed bidding as set forth in § 38.021 of this chapter;

(B) Competitive sealed proposals as set forth in § 38.022 of this chapter;

(C) Request for qualifications as set forth in § 38.023 of this chapter. Architectural and engineering services shall be solicited as set forth in § 38.023 of this chapter;

(D) Recurring procurements as set forth in § 38.024 of this chapter;

(E) Small purchases as set forth in § 38.025 of this chapter;

(F) Sole source procurement as set forth in § 38.026 of this chapter;

(G) Emergency procurements as set forth in § 38.027 of this chapter;

(H) Waiver of bid or proposal requirement for extraordinary conditions as set forth in § 38.028 of this chapter;

(I) Exempt services are set forth in § 38.029 of this chapter;

(J) Investments or insurance as set forth in § 38.030 of this chapter; and

(K) Other methods of source selection may be established by regulation as may be promulgated by the Director of Purchasing.
(Ord. passed 6-20-2005)

§ 38.021 COMPETITIVE SEALED BIDDING.

(A) *Conditions for use.* Purchase orders or contracts, in an amount in excess of $10,000, shall be awarded by competitive sealed bidding unless the Director of Purchasing determines that an alternate method of source selection, as set forth herein and the referenced sections therein of this chapter, is appropriate.

(B) *Invitation for bids.* An invitation for bids shall be issued and shall include specifications and any other descriptions of the commodity, and all proposed and/or mandatory contractual terms, special terms and conditions applicable to the procurement, other legal and regulatory requirements, including, but not limited to, the requirements of Chapter 93 of the Code of Ordinances. With respect to any particular invitation for bids, the Director of Purchasing or the Corporation Counsel may vary any clauses that may have, prior thereto, been promulgated by the Department of Purchases for inclusion in all invitation for bids. However, the Director of Purchasing does not have the discretion to vary the specifically enumerated legal requirements of the code of ordinances.

(C) *Public notice.* Adequate public notice of the invitation for bids shall be given a reasonable time period prior to the date set forth therein for the opening of bids and in a manner that the Director of Purchasing determines will maximize public participation and competition in the competitive sealed bidding process.

(1) (a) *Generally.* The notice shall be inserted, at least ten calendar days before the final date of submitting bids, in the major daily newspaper published in the city and may, in the sole discretion of the Director of Purchasing, be posted on the Internet.

(b) *Notice following pre-qualification of bidders.* In the event of a multi-step competitive or sealed bid, the notice may be sent only to the vendors qualified to bid.

(2) (a) Each notice of a planned purchase under this chapter shall indicate the type of commodities or services to be purchased.

(b) The using agency shall provide the Director of Purchasing with special notice requirements necessary to comply with the provisions of federal or state grants, loans or reimbursement agreement, when applicable.

(D) *Bid opening.*

(1) Bids shall be opened publicly at the time and place designated in the invitation for bids. The amount of each bid, and such other relevant information as may be specified by policy adopted by the Director of Purchasing, together with the name of each bidder shall be recorded; the record and each bid shall be open to public inspection.

(2) Each bid shall be kept sealed or secured until opened publicly at the time stated in the notice soliciting the bid.

(E) *Bid acceptance and bid evaluation.* Bids shall be unconditionally accepted without alteration or correction, except as authorized in this chapter. The invitation for bid may set forth the evaluation criteria to be used. No criteria may be used in a bid evaluation that are not set forth in the invitation for bids. In the event there is no specific evaluation criterion set forth in the invitation for bids, evaluation will be based on a determination of the lowest responsible, qualified and responsive bidder as set forth in this chapter.

(1) *Evaluation criteria.* Bids shall be evaluated by the Director of Purchasing, or the using agency and/or consultants if so designated by the Director, based on the requirements set forth in the invitation for bids, which may include criteria to determine acceptability such as inspection, testing, quality, workmanship, delivery and suitability for a particular purpose.

(2) *Objectively measurable criteria.* Those criteria that will affect the bid price and be considered in evaluation for award shall be objectively measurable, such as discounts, transportation costs, and total or life cycle costs.

(F) *Correction or withdrawal of bids; cancellation of awards.* Correction or withdrawal of inadvertently erroneous bids before or after award, or cancellation of awards of contracts or purchase orders based on the bid mistakes, shall be permitted with the approval, in writing, of the Director of Purchasing. The actions of the Director of Purchasing shall take into consideration preservation of the integrity of the competitive sealed bidding process under this chapter.

(1) *Prohibited practices following bid opening.* After bid opening, no changes in bid prices or other provisions of bids prejudicial to the interest of the city or fair competition shall be permitted.

(2) *Written determination regarding cancellation of awards or contracts or purchase orders.* Except as otherwise provided by regulation and/or policy, all decisions to permit the correction or withdrawal of bids, or cancel awards of contracts or purchase orders based on bid mistakes shall be supported by a written determination made by the Director of Purchasing.

(G) *Award.*

(1) *Lowest responsible, qualified and responsive bidder.* The contract or purchase order shall be awarded with reasonable promptness by written notice to the lowest responsible, qualified and responsive bidder whose bid meets the requirements and evaluation criteria, if any, set forth in the invitation for bids, or criteria established by the Director of Purchasing.

(a) In considering past performance of a bidder for the purpose of determining the "lowest responsible, qualified and responsive bidder", the Director of Purchasing shall evaluate the skill, ability and integrity of the bidder in terms of the bidder's fulfillment of past contractual obligations and the bidder's experience or lack of experience in delivering equipment, materials, supplies or contractual services of the size or amount for which bids have been solicited.

(b) The Director of Purchasing may reject any or all bids or parts of bids or bids for any one or more commodities or contractual services, when he shall deem that the public interest will be served.

(2) *Construction project exception: permissible adjustment of the bid price.* Unless otherwise prohibited by federal or state law, regulation or agency requirement, with respect to construction projects only, the Director of Purchasing is authorized to negotiate an adjustment of the bid price, including changes in the bid requirements, with the low responsible and responsive bidder, in order to bring the bid within the amount of available funds, in the event:

(a) All bids for a construction project exceed available funds;

(b) The low responsible and responsive bid does not exceed the funds by more than 10%; and

(c) The time or economic considerations preclude re-solicitation of work of a reduced scope.

(H) *Multi-step competitive sealed bidding.* When it is considered impractical to initially issue an invitation for bid, the Director of Purchasing may issue a request for information or request for proposals (requesting technical information) or request for qualifications (requesting the qualifications of bidders) as the first step(s) in the process, to be followed by an invitation for bids which may be limited to those bidders who have been qualified under the criteria set forth in the first solicitation.
(Ord. passed 6-20-2005)

§ 38.022 COMPETITIVE SEALED PROPOSALS.

(A) *Conditions for use.*

(1) Purchase orders or contracts, in excess of $10,000, may be entered into following the issuance of competitive sealed proposals when the Director of Purchasing determines that the use of competitive sealed bidding is either not practicable or not advantageous to the city. As a general rule, the competitive sealed proposal shall be utilized for services, construction contracts and other commodities or services not susceptible to a competitive sealed bid.

(2) Professional services other than architectural and engineering are exempt from the provisions of this chapter; however, using agencies may, in the director of purchasing's discretion, utilize the competitive sealed proposal process set forth herein.

(B) *Requests for proposals.* Proposals shall be solicited through a request for proposals. As required by the Director of Purchasing, a request for information, request for qualifications or other forms of solicitation may be utilized to ascertain information, to establish qualifications, or to establish a list of those eligible to submit bids or proposals at subsequent steps in the procurement process in a manner established by the Director of Purchasing. The solicitations shall also contain, among other things, a description of the projected scope of services or system requirements, a notice of mandatory city contractual provisions or terms and conditions required by this chapter or other state or federal agencies as well as the requirements of Chapter 93 of the code of ordinances. Services shall be selected on the basis of a request for proposals. The Director of Purchasing shall establish guidelines identifying the content of requests for proposals. With respect to any particular request for proposals, the Director of Purchasing or the Corporation Counsel may vary any clauses that may have, prior thereto, been promulgated by the Department of Purchases for inclusion in all request for proposals. However, the Director of Purchasing does not have the discretion to vary the specifically enumerated legal requirements of the code of ordinances.

(C) *Public notice.* Adequate public notice of the request for proposals shall be given a reasonable time period prior to the date set forth therein for the opening of proposals and in a manner that the Director of Purchasing determines will maximize public participation and competition in the competitive sealed proposal process.

(1) The notice shall be inserted, at least ten calendar days before the final date of submitting proposals in the major daily newspaper published in the city and may, in the sole discretion of the Director of Purchasing, be posted on the Internet.

(a) *Notice following pre-qualification of offerors.* In the event of pre-qualification of offerors, the notice may be sent only to the vendors qualified to respond.

(b) *Notice; indication.* Each notice of a planned purchase under this chapter shall indicate the type of commodities or services to be purchased.

(2) The using agency shall provide the Director of Purchasing with special notice requirements necessary to comply with the provisions of federal or state grants, loans or reimbursement agreements.

(D) *Receipt of proposals; register of proposals.* Proposals shall be opened publicly at the time and place designated in the request for proposals. Proposals shall be opened and only the names of each offeror recorded so as to avoid disclosure of contents to competing offerors during the process of negotiation. A register of proposals shall be prepared in a format established by the Director of Purchasing. The register shall be open for public inspection after the award of the contract or purchase order, with the exception of confidential trade and business information withheld in accordance with the general statutes.

(E) *Evaluation factors and criteria.*

(1) The request for proposals shall state all evaluation criteria including, but not limited to:

(a) Demonstrated compliance with the design or other requirements;

(b) Offeror qualifications;

(c) Financial capacity;

(d) Project schedule;

(e) Price or life cycle price, where appropriate; and

(f) Other factors, if any.

(2) Not withstanding the aforementioned criteria, additional factors may be considered at the discretion of the Director of Purchasing prior to the opening of the proposals.

(F) *Correction or withdrawal of proposals; cancellation of awards.* Correction or withdrawal of inadvertently erroneous proposals before or after award, or cancellation of awards of contracts or purchase orders based on the mistakes, may be permitted by the Director of Purchasing, provided that, the determinations by the Director of Purchasing shall take into consideration preservation of the integrity of the competitive sealed proposal process under this chapter.

(1) *Prohibited practices following opening of proposals.* After opening the proposals, no changes in prices or other provisions of proposals prejudicial to the interest of the city or fair competition shall be permitted.

(2) *Written determination regarding cancellation of awards or contracts or purchase orders.* Except as otherwise provided by any regulation and/or policy, all decisions to permit the correction or withdrawal of proposals, or cancel awards of contracts or purchase orders based on proposal mistakes shall be supported by a written determination made by the Director of Purchasing.

(G) *Selection committee.* The Director of Purchasing or his designee shall establish a selection committee of two or more people to review responses to requests for proposals. No member of the selection committee shall have a financial interest in the transaction.

(1) *Review of responses to request for proposals.* The selection committee shall evaluate the responses to requests for proposals. The selection process may include interviews or oral presentations, with the determination of those to be invited to be interviewed or to make an oral presentation to be based on the established evaluation factors.

(2) *Recommendation.* Based on its review, the selection committee shall submit to the Director of Purchasing a list, in rank order based on the established evaluation factors, of no fewer than three firms, if possible.

(3) *Negotiation.* The Director of Purchasing, or his designee, shall negotiate a contract, including in regard to cost and scope, with the firm rated highest by the selection committee.

(4) *Failure to negotiate a contract.* Should the Director of Purchasing, or his designee, be unable to negotiate a satisfactory contract that he determines to be fair and reasonable to the city with the firm selected for negotiations in accordance with this section, the Director of Purchasing, or his designee, may then continue this process, starting with the next highest rated firm on the list established by the selection committee, until such time as a contract determined by the Director of Purchasing to be fair and reasonable to the city is negotiated or until the Director of Purchasing determines that the existing procurement process should be terminated.

(H) *Award.*

(1) *Offer most advantageous to the city.* Award shall be made by the Director of Purchasing, or his designee, to the responsible offeror whose proposal conforms to the solicitation and is determined in writing by the Purchasing Director, or his designee, to be the most advantageous to the city, in accordance with the criteria set forth in the request for proposals or other solicitation, including price and the evaluation factors.

(2) *Contents of transactional files.* The contract or purchase order files shall contain the basis on which the award is made.

(3) *Written notice of award.* Notice of the award of a contract or purchase order shall be promptly given to the successful offeror.
(Ord. passed 6-20-2005)

§ 38.023 REQUESTS FOR QUALIFICATIONS.

(A) *Policy.* The city, at the request of a using agency, may issue a request for qualifications for services for a means of prequalifying a firm prior to proceeding with a competitive seated bid as set forth

herein or a request for proposal as set forth herein. The remaining requirements hereof shall be followed for those firms that are prequalified.

(B) *Solicitation of professional service firms.* The Director of Purchasing shall, upon request of a using agency, issue a request for qualifications in order to encourage firms engaged in the lawful practice of their profession to submit a statement of qualifications and performance data. The request for qualifications shall be published in appropriate trade and professional publications in order to attain the objectives of the policies set forth in this section.

(C) *Selection Committee.* The Director of Purchasing or his designee shall establish a Selection Committee of two or more people to review responses to requests for qualifications. No member of the Selection Committee shall have a financial interest in the transaction.

(1) *Review of responses to request for qualifications.* The Selection Committee shall evaluate the responses to requests for qualifications.

(2) *Recommendation.* Based on its review, the Selection Committee shall submit to the Director of Purchasing a list, in rank order based on the evaluation factors and criteria established by the Selection Committee, of no fewer than three firms, if possible.

(3) *Services other than architectural and engineering services.* For services other than Architectural and Engineering services, upon submission to the Director of Purchasing of the list contemplated under division (C)(2) above, in lieu of the negotiations as contemplated in division (C)(4) below, invitations to bid or requests for proposals, whichever is applicable given the nature of the procurement involved, shall be sent to those appearing on the list. The successful bidder or respondent shall, thereafter, be chosen in accordance with the provisions of either § 38.022 and 38.023, whichever is applicable.

(4) *Architectural and engineering services negotiations.* It is the policy of the city to publicly announce all requirements for architectural and engineering services and to negotiate contracts for architectural or engineering services on the basis of demonstrated competence and qualifications for the type of services required and at fair and reasonable prices.

(a) With respect to the procurement of Architectural and Engineering Services costing $25,000 or more, a list of qualified firms shall be chosen as provided for in divisions (B) and (C)(1) and (2) above. Upon submission to the Director of Purchasing of the list contemplated under division (C)(2) above, the Director of Purchasing, or his designee, shall negotiate a contract with the highest qualified firm at the compensation, which the Director of Purchasing, or his designee, determines in writing to be fair and reasonable to the city.

1. *Considerations.* In preparing a decision the Director of Purchasing, or his designee, shall take into account the estimated value, the scope, the complexity and the professional nature of the services to be rendered.

2. *Failure to negotiate a contract.* Should the Director of Purchasing, or his designee, be unable to negotiate a satisfactory contract with the firm considered to be the most qualified, at a price the Director of Purchasing determines to be fair and reasonable to the city, negotiations with that firm shall be formally terminated. If negotiations are to continue, the Director of Purchasing, or his designee, shall then undertake negotiations with the second most qualified firm. Failing accord with the second most qualified firm, the Director of Purchasing, or his designee, shall formally terminate negotiations. Should the Director of Purchasing, or his designee, be unable to negotiate a contract at a fair and reasonable price with any of the selected firms, the Director of Purchasing, or his designee, shall select additional firms in order of their competence and qualifications and the Director of Purchasing, or his designee, shall continue negotiations in accordance with this section until an agreement is reached. If, at any time during this process, the Director of Purchasing determines that cancellation of the existing procurement process would be in the best interests of the city, he may do so in writing.

(b) With respect to the procurement of Architectural and Engineering Services under $25,000, all such services shall be solicited and selected in accordance with the regulations or policies promulgated by the Director of Purchasing.
(Ord. passed 6-20-2005)

§ 38.024 RECURRING PROCUREMENTS.

(A) *The blanket or consolidated procurement.* The Director of Purchasing shall, wherever appropriate, consolidate the purchase of commodities or services required by the various departments, on a recurring basis, in order to obtain competitive sealed bids or other forms of solicitation to assure the best possible prices. Upon award, the Director of Purchasing shall notify all using agencies of the blanket or consolidated procurement; which shall be valid for the fiscal year in which it was issued.

(B) *Information.* The Director of Purchasing shall circulate to all department heads the pertinent information or catalogs relative to each blanket or consolidated procurement.

(1) *Submission of recurrent commodities and services.* By May 1 of each year, each department head shall submit to the Director of Purchasing an inventory and estimated annual expenditure for commodities or services utilized, on a recurrent basis, in the customary and usual activities of the Department. Within 60 days thereafter, the Director of Purchasing shall determine whether the commodities and services fall into the category of recurrent commodities and, if so, shall solicit such recurrent commodities or services in the appropriate manner set forth in this chapter.

(2) *Issuance of purchase orders on behalf of using agencies.* Upon notice of the award of the blanket or consolidated procurement, the using agencies may submit a requisition, pursuant to § 38.003, for the purchase of the commodities or services. Each using agency shall be limited to the unexpended and unencumbered funds in their budget designated for the purchases and shall be required to file a § 38.004, an encumbrance with the Director of Purchasing.
(Ord. passed 6-20-2005)

§ 38.025 SMALL PURCHASES.

(A) *Small purchases between $2,500 and $9,999.* All procurements where the amount involved is less than $10,000, but equal to or greater than $2,500 shall be made without newspaper advertisement and without observing the procedures for the award of contracts and purchase orders.

(1) *Price alternatives.* All small purchases shall, wherever possible, be based on at least three written price alternatives from qualified bidders, as solicited by the Director of Purchasing or, at his discretion, a representative of the using agency. The notice pertaining to the solicitation shall set forth the time and place for the submission. The notice may be tendered to qualified bidders, by telephone, facsimile or electronically. A record of all notices and price alternatives shall be kept in the records of the Department of Purchases.

(2) *Award.* The Director of Purchasing shall award the purchase order to the lowest responsible bidder. If the purchase order is not given to the lowest responsible bidder, a written explanation shall be made by the Director of Purchasing and be filed as a public record with the other papers to the transaction.

(B) *Small purchases in an amount less than $2,500.* All procurements where the amount involved is less than $2,500 may be awarded on a single bid and, at the Director's discretion, accepted orally by the using agency.

(C) *Sustaining purchase orders.* Sustaining purchase orders may be issued by the Director, in his sole discretion, for the contingent needs of the various departments; but no sustaining purchase orders shall exceed the sum of $1,500.

(D) *Artificial division of procurements prohibited.* The Director of Purchasing has the authority to determine that a using agency has artificially divided procurement requirements so as to constitute a small purchase under this section and thereby prohibit the using agency from utilizing the small purchase procedures.
(Ord. passed 6-20-2005)

§ 38.026 SOLE SOURCE PROCUREMENT.

(A) *A single available source for a commodity, service or construction item.* A contract or purchase order may be awarded for a commodity, service or construction item without competition when, under this section the Director of Purchasing determines, in writing, that there is only one source for the required commodity, service or construction item.

(B) *Factors considered by the Director of Purchases.* Among the factors the Director of Purchasing may take into consideration are the following:

(1) Equipment, material, services or supplies for which there is no comparable competitive product from more than one supplier;

(2) Public utility services from natural or regulated monopolies;

(3) A component or replacement part for which there is no commercially available substitute, and which can be obtained only from the manufacturer;

(4) An item where compatibility is the overriding consideration, such as computer operating software enhancements for an existing system;

(5) Whether there is only one authorized service provider; or

(6) A used item that becomes immediately available and is subject to prior sale.
(Ord. passed 6-20-2005)

§ 38.027 PROCUREMENTS PERTAINING TO PUBLIC EMERGENCIES.

Notwithstanding any other provisions of this chapter, the Mayor may authorize the Director of Purchasing to make emergency procurements when there exists a threat to the lives, health, property, welfare or safety of the citizens of the city.

(A) *Determination of public emergency*. To so authorize the emergency procurements, the Mayor shall act in accordance with a determination of public emergency by:

(1) The President of the United States;

(2) The Governor of the state;

(3) The affirmative vote of eight members of the Board of Aldermen; or

(4) The Mayor, only upon the written advice of the Director of Health or the Superintendent of Police or Fire Chief.

(B) *Written determination*. The Mayor's authorization shall be in writing and include a determination of the basis for the public emergency and the reasons for the selection of the particular contractor. The determination shall be filed with the City Clerk for public inspection within 24 hours of the authorization and forwarded, by the City Clerk, to the Board of Aldermen and Finance and Audit Review Commission.
(Ord. passed 6-20-2005)

§ 38.028 WAIVER OF BID OR PROPOSAL REQUIREMENT: EXTRAORDINARY CONDITIONS.

(A) *Extraordinary conditions or contingencies*. Whenever a situation (that is not deemed a public emergency, as set forth in § 38.027) exists by reason of extraordinary conditions or contingencies that

could not reasonably be foreseen and guarded against (or within the purview of § 38.027 above), or because of unusual trade or market conditions, the Director of Purchasing, may, if it is in the best interest of the city, waive the competitive bid or proposal requirements set forth in §§ 38.021 and 38.022. The determination shall be based upon need and shall not be utilized in order to satisfy preferences or convenience of the using agency, for preventing funds from lapsing at the end of a fiscal year or for any reason that would circumvent the procurement methods set forth in this chapter.

(B) *Filing of an annual report.* A statement of all purchases made under the provisions of this section shall be set forth in the annual report of the Finance and Audit Review Commission.
(Ord. passed 6-20-2005)

§ 38.029 EXEMPT SERVICES.

The following shall be exempt from the competitive bid and proposal process. Using agencies may, nonetheless, elect to undertake a competitive selection process to solicit professional services which are exempt from the competitive bid and proposal process:

(A) Procurement of the services of attorneys-at-law hired by the Corporation Counsel and approved by the Mayor, in accordance with the standards set forth in § 7B-1(d)(5) of the Charter of the city;

(B) Procurement of professional services as defined in § 38.002;

(C) Procurement of architectural and engineering services where entered in compliance with § 38.023 of this chapter;

(D) Procurement of services, equipment or leases of equipment that are necessary for instruction and related services to be provided to individual students with disabilities in accordance with the requirements of the Individuals with Disabilities Act ("I.D.E.A.") and their respective regulations; and

(E) Agreements between:

(1) The city, state and/or federal governments pertaining to grants; or

(2) The city and other community based organizations, universities and other nonprofit entities participating as potential service providers in the application for a competitive grant offered by the federal or state governments.
(Ord. passed 6-20-2005)

§ 38.030 EXEMPT INVESTMENT AND INSURANCE.

Investment of city funds, including those of the pension plan, are exempt from the competitive bid and proposal process contained in this chapter, except for the selection of any investment advisors or managers who direct the investment of the funds. The placement of insurance coverage is exempt from

the competitive bid and proposal process contained in this chapter, except for the selection of the broker who places any insurance on behalf of the city.
(Ord. passed 6-20-2005)

§ 38.031 RECORD OF PROCUREMENT ACTIONS TAKEN WITH REGARD TO SOLE SOURCE, WAIVER AND EMERGENCY PROCUREMENTS.

(A) The Director of Purchasing shall maintain a record, at the Office of the Department of Purchases, listing all contracts or purchase orders made under §§ 38.026 through 38.028 pertaining to sole source, emergency and waiver purchases for a minimum of five fiscal years.

(B) The record shall contain:

(1) Each contractor's name;

(2) The amount and type of each contract or purchase order; and

(3) A listing of the commodities, services or construction procured under each contract or purchase order.
(Ord. passed 6-20-2005)

§ 38.032 FEDERAL AND STATE PROCUREMENT STANDARDS; APPLICATION FOR COMPETITIVE GRANTS.

Notwithstanding the requirements of this chapter, all procurements that include funding by federal or state funds, including the application for competitive grants, shall comply with the procurement and legal requirements of the federal or state laws or regulations.
(Ord. passed 6-20-2005)

§ 38.033 FEDERAL PROCUREMENT SUBJECT TO SECTION 3.

(A) Whenever a recipient receives HUD housing or community development program funds for a project in excess of $200,000, any contractor or subcontractor procured under this chapter for work on such project for a contract in excess of $100,000, shall comply with the city's Section 3 Policy. The Section 3 Policy shall apply to every contractor or subcontractor meeting the $100,000 threshold.

(B) The city shall notify all potential contractors and subcontractors of the Section 3 Policy by including a copy of, or information from, the Section 3 Policy in any request for proposal, bid package and/or contract associated with a Section 3 project. A copy of the Section 3 Policy shall also be made

available for review and inspection at the following locations: City Clerk's Office, 235 Grand Street, Waterbury, CT; City of Waterbury Purchasing Department, 235 Grand Street, Waterbury, CT and Waterbury Development Corporation, 24 Leavenworth Street, Waterbury, CT; as well as on the Purchasing Department website: http://www.waterburyct.org/content/458/930/933.aspx and the Waterbury Development Corporation website: http://www.wdconline.org.
(Ord. passed 2-21-2012)

CANCELLATION OF INVITATIONS FOR BIDS OR REQUEST FOR PROPOSALS

§ 38.045 CANCELLATION OF INVITATION FOR BIDS OR REQUESTS FOR PROPOSALS; WAIVER OF MINOR IRREGULARITIES.

(A) *Cancellation.* The Director of Purchasing may:

(1) Cancel an invitation for bids, a request for proposals or other solicitation; or

(2) Reject any or all bids or proposals, in whole or in part, as may be specified in the invitation for bids, request for proposals, or other solicitation, when he deems it in the best interest of the city, in

accordance with regulations and/or policies, if any. The Director shall set forth his reasons, in writing, which shall be part of the contract file. No written determination shall be required for the cancellation of an entire invitation for bid or request for proposals.

(B) *Waiver of minor irregularities.* The Director of Purchasing may waive minor irregularities in bids and proposals if he determines that such a waiver would be in the best interest of the city. The Director of Purchasing shall state the reasons for any such waiver in writing and include such statement in the contract file.
(Ord. passed 6-20-2005)

QUALIFICATIONS AND DUTIES

§ 38.046 RESPONSIBILITY OF BIDDERS AND OFFERORS.

(A) *Determination of nonresponsibility.* The Director of Purchasing shall make a determination of nonresponsibility of a bidder or offeror. The unreasonable failure of a bidder or offeror to promptly supply information in connection with an inquiry with respect to responsibility may be grounds for a determination of nonresponsibility with respect to the bidder or offeror. The Director of Purchasing may seek the advice of the using agency and the consultants, if any. If requested by the bidder or offeror deemed nonresponsible the Director of Purchasing may provide a written determination.

(B) *Right of nondisclosure.* To the extent permitted by the state general statutes, confidential information furnished by a bidder or offeror pursuant to this chapter shall not be disclosed outside of the Department of Purchases without prior written consent by the bidder or offeror.
(Ord. passed 6-20-2005)

§ 38.047 PREQUALIFICATION OF SUPPLIERS.

As set forth herein, prospective suppliers may be prequalified for particular types of commodities, services and construction. The Director of Purchasing shall determine the method of submitting prequalification information and the information required in order to be prequalified.
(Ord. passed 6-20-2005)

§ 38.048 SUBSTANTIATION OF OFFERED PRICES.

The Director of Purchasing may request factual information reasonably available to the bidder or offeror to substantiate that the price or cost offered, or some portion of it, is reasonable.
(Ord. passed 6-20-2005)

§ 38.049 PREFERENCE FOR BIDDERS AND OFFERORS LOCATED IN THE CITY.

A preference shall be given to a qualified bidder or offeror whose business is located in the city whose bid or proposal falls within 2% of the lowest bid or the preferred proposal. Notwithstanding the foregoing, the 2% preference shall not apply when the bid or proposal exceeds the amount of $20,000 over the lowest qualified bid or preferred proposal. This provision shall apply to commodities or services that are funded entirely by the city general or capital funds.
(Ord. passed 6-20-2005)

§ 38.050 REPORTING OF ANTI-COMPETITIVE PRACTICES.

When for any reason collusion or other anticompetitive practices are suspected among any bidders or offerors, a notice of the relevant facts shall be transmitted to the Corporation Counsel who shall refer the matter to the Attorney General of the State of Connecticut.
(Ord. passed 6-20-2005)

DETERMINATIONS

§ 38.051 RETENTION OF PROCUREMENT RECORDS.

All procurement records shall be retained and disposed of in accordance with the records retention guidelines established by the laws of the State of Connecticut.
(Ord. passed 6-20-2005)

§ 38.052 FINALITY OF DETERMINATIONS.

The determinations of the Director of Purchasing required by the following sections are final and conclusive:

(A) Section 38.069(D) (Contracts: Sale, Lease or Rental of City Property);

(B) Section 38.021(F) (Competitive Sealed Bidding — Correction or Withdrawal of Bids; Cancellation of Awards);

(C) Section 38.022(A) (Competitive Sealed Proposals — Conditions for Use);

(D) Section 38.022(H) (Competitive Sealed Proposals — Award);

(E) Section 38.023 (Requests for Qualifications);

(F) Section 38.024 (Recurring Procurements);

(G) Section 38.025 (Small Purchases);

(H) Section 38.026 (Sole Source Procurement);

(I) Section 38.027 (Procurements Pertaining to Public Emergencies);

(J) Section 38.028 (Waiver of Bid or Proposal Requirements);

(K) Section 38.029 (Exempt Services);

(L) Section 38.032 (Federal and State Procurement Standards);

(M) Section 38.046(A) (Responsibility of Bidders and Offerors — Determination of Nonresponsibility);

(N) Section 38.048 (Substantiation of Offered Prices);

(O) Section 38.049 (Preference for Bidders and Offerors Located in the City); and

(P) Section 38.067 (Contractor Accounting Requirements).
(Ord. passed 6-20-2005)

CONTRACTS AND PURCHASE ORDERS

§ 38.065 OBLIGATIONS OF PERSONS SEEKING A CONTRACT OR PURCHASE ORDER WITH THE CITY; AFFIDAVITS, DISCLOSURES AND ENCUMBRANCES.

(A) (1) No contract, regardless of how procured, shall be awarded by the city to any person until the following documents have been received by the city:

(a) An affidavit of the person that the person, or affiliated entity, has no delinquent taxes or other financial obligation owed to the city; and

(b) Disclosures as required by Chapter 39 this code.

(2) The affidavits and disclosures, if not submitted as part of competitive bid provisions, shall be obtained by the city agency or official seeking the contract.

(B) No contract, regardless of how procured, shall be awarded by the city to any person until a certification has been obtained from the Tax Collector for the city that the person or any affiliated entity, either directly or through a lease, has no back taxes.

(C) No purchase order shall be awarded;

(1) In the event it has been determined that a bidder, offeror or any affiliated entity, either directly or through a lease, owes back taxes to the city; and/or

(2) In the event it has been determined that the bidder, offeror or any affiliated entity has not filed a current list of taxable personal property as required by the general statutes; unless it is otherwise certified that the person is not required to file the list.
(Ord. passed 6-20-2005)

§ 38.066 DISCLOSURES REQUIRED BY THE FEDERAL OR STATE GOVERNMENTS.

In addition to the foregoing, no contract or purchase order shall be awarded by the city to any person, until all affidavits, disclosures and certifications required by the federal or state governments have been executed and delivered as required.
(Ord. passed 6-20-2005)

§ 38.067 CONTRACTOR ACCOUNTING REQUIREMENTS.

The city may require contractors to submit appropriate documentation prior to the award of contracts or purchase orders in which the city agrees to reimburse costs, confirming that:

(A) The proposed contractor's accounting system will permit timely development of all necessary cost data in the form required by the specific contract type contemplated; and

(B) The proposed contractor's accounting system is adequate to allocate costs, if required, in accordance with generally accepted accounting principles.
(Ord. passed 6-20-2005)

§ 38.068 PURCHASE ORDERS; WHEN REQUIRED.

Purchase orders shall be required for all commodities regardless of the amount, unless the Director of Purchasing determines that a contract is necessary. All agreements for services and professional services in an amount less than $50,000 shall be documented by purchase order, unless the scope of services requires the utilization of a contract, as determined by the Director of Purchasing following consultation with the Corporation Counsel.
(Ord. passed 6-20-2005)

§ 38.069 CONTRACTS; WHEN REQUIRED.

(A) *When required.* Contracts shall be required for leases (or other real estate agreements) and for all services and professional services in the amount of $50,000 or more.

(B) *Grants with the federal or state government.*

(1) *Required documentation.* All grants with the federal or state government, otherwise exempt from certain provisions of this chapter, shall be documented in writing and executed as set forth in § 38.072.

(2) *Required review.* All federal or state government grant requests and applications other than those for the Board of Education shall be reviewed by the Office of the City's Budget Director prior to submission.

(3) *Required approvals.* All grant applications and contracts may be subject to approval by the Board of Aldermen if required by federal or state law or as may be otherwise set forth in this code. Notwithstanding the exemption of grants from any other provisions of this Chapter 38, the city will not execute a written agreement pertaining to grants that require matching funds by the city, unless approved by the Board of Aldermen.

(C) *Grants with other agencies.*

(1) *Required documentation.* All grants with agencies other than the federal or state government (other agencies), which are otherwise exempt from certain provisions of this chapter, shall be documented in writing and executed as set forth in § 38.072.

(2) *Required review.* All other agencies grant requests and applications shall be reviewed by the Office of the City's Budget Director prior to submission.

(3) *Required approvals.* All other agencies grant contracts shall be subject to review and approval of the Director of Finance and Corporation Counsel. Notwithstanding the exemption of grants from any other provisions of this Chapter 38, the city will not execute a written agreement pertaining to grants that require matching funds by the city, unless approved by the Board of Aldermen.

(D) *Sale, lease or rental of city property.* Rental, lease, purchase and lease/purchase agreements shall be subject to the requirements of this chapter for competition. The Director of Purchasing shall determine the method of selection and issue a written determination relating thereto. The forgoing notwithstanding, any agreement to transfer or dispose of any city held interest in real property is subject to the following requirements.

(1) The Director of Purchasing shall instruct the City Planner to compile and maintain a list of all real property in which the city may have an interest which, in the opinion of the City Planner, are

eligible for transfer or disposition by the city. The list shall, for each interest in real property appearing thereon, include a description of any conditions to which any such transfer or disposition must be subject in order to ensure the property's use in compliance with any city plan, neighborhood revitalization plan or other similar plan or plans, (as that term is defined under applicable laws, statutes and ordinances), which may have been adopted by, or is otherwise in effect, at the time of the transfer or disposition. The City Planner shall make determinations as to the ownership of any such real property in which the city is suspected to have an interest only after consultation with the Corporation Counsel.

(2) Any such transfer or disposition must first be requested in writing by, or recommended in writing by, the using agency, if any, having direct control over the interest in, real property prior to its transfer or disposition and the City's Property Manager (as designated by the Director of Finance). If any such request or recommendation is made by the Property Manager without identifying a using agency having direct control over the interest, the Property Manager's request or recommendation shall state the reasons for concluding that no using agency is identifiable. If a request or recommendation for such a transfer or disposition is made by a using agency, then the request or recommendation must be forwarded to the Property Manager for approval of the transfer or disposition prior to initiating further proceedings to effectuate the transfer or disposition.

(3) The city may entertain requests for transfer or disposition of any interest in real property from members of the general public and the requests shall be directed to the Property Manager. Upon receipt of such a request by the Property Manager, the Property Manager shall have the discretion to refuse to process the request. Any refusal to process the request shall, upon the request of any interested party, be subject to review by the Board of Aldermen and, upon a simple majority vote thereof, may be overridden.

(4) If a request for transfer or disposition as contemplated under division (D)(3) above is received and a decision to process the same is made, either by the Property Manager or by the Board of Aldermen subsequent to a review of a refusal by the Property Manager, the Property Manager must then determine which using agency has direct control over the interest in real property and obtain the using agency's written approval of the transfer or disposition. If no such using agency can be identified, the Property Manager shall state in writing the reasons for concluding that no using agency is identifiable.

(5) Prior to approving any transfer or disposition, the Property Manager shall be responsible for assuring that the interest in real property sought to be transferred or disposed of appears upon the aforementioned list prepared by the City Planner. If the interest does not appear on the list, then the Property Manager must obtain written authorization for the City Planner for the transfer or disposition. The City Planner's authorization must also state any and all conditions, as mentioned in division (D)(1) above, to which any such transfer or disposition must be subject or state that no such conditions exist.

(6) After obtaining any and all approvals as may be required pursuant to divisions (D)(1) through (5) above, the Property Manager shall, subject to the approval of the Purchasing Director, choose the method of solicitation of bids to be used relative to the given transfer or disposition.

Thereafter, and after consultation with the Director of Purchasing and the Corporation Counsel, the Property Manager shall prepare any required solicitation documents relative to the transfer and disposition of the interest in real property in question. The documents shall include, amongst other things, any relevant selection criteria as recommended by the Director of Purchasing. Upon the completion of the solicitation documents, they shall be presented by the Property Manager to the Director of Purchasing for final approval. The Director of Purchasing shall, thereafter and after consultation with the Corporation Counsel, either approve or reject such solicitation documents. In the event that the documents are rejected the Director of Purchasing shall, by any reasonable means, inform the Property Manager of the perceived deficiencies and of the Director of Purchasing's recommendations for curing the same. Upon curing any such deficiencies, the solicitation documents shall be resubmitted to the Director of Purchasing for approval. Upon ultimate approval of the solicitation documents, the Director of Purchasing shall provide written notice thereof to the Property Manager and to the Corporation Counsel. After the approval by the Director of Purchasing, the Director of Purchasing shall advertise such solicitation or provide such other notice of the proposed transfer or disposition as he deems appropriate under the solicitation method being employed. Any approvals given by, or actions taken by, the Director of Purchasing under this division (D)(6) shall be given or taken in a manner which the Director of Purchasing reasonably deems to be consistent with the principles of competition which are applicable to the solicitation of procurements under this chapter and any restrictions or exceptions provided for in relation to effectuating the principles hereunder.

(7) Upon the receipt of responses to any solicitation as contemplated in division (D)(6) above, the Director of Purchasing shall open them in a manner the Director deems to be consistent with the provisions applicable to the solicitation of procurements under this chapter and shall, thereafter establish a committee to review the same. The committee shall consist of, at a minimum, the Director of Purchasing the Property Manager and the Chief Executive Officer of the Waterbury Development Corporation or his designee. The Mayor may, however, elect to participate on the committee, or to appoint a designee to do so in his stead, if the Mayor deems it to be in the city's best interest to do so. The committee shall either reject all bids or choose one bidder as the successful bidder based upon the selection criteria identified in the solicitation documents.

(8) The Property Manager shall prepare a recommendation to award a contract for the transfer or disposition in question to the successful bidder chosen as contemplated under division (D)(7) above. The Property Manager shall submit the recommendation to the City Plan Commission for a report pursuant to Conn. Gen. Stat. § 8-24, as the same shall be amended from time to time. The Property Manager shall, after a failure of the City Plan Commission to act within the requisite statutory time period or upon issuance of a report by the City Plan Commission, submit the recommendation, and a copy of any related City Plan Commission report, to the Board of Aldermen for action pursuant to the applicable provisions of the Charter of the city as same may be amended from time to time.

(9) The Property Manager shall be responsible for providing the Board of Aldermen, with any and all information required, including evidence of value if applicable and copies of all bids or responses received by the city in pursuant to the solicitation of the bids or responses relative to any given property,

to evaluate and take action on any such recommendation. The Property Manager shall, furthermore, be responsible for obtaining any and all appraisals for properties for which, in the Board's opinion as evidenced by resolution of the Board, a transfer or disposition may be subject to referendum pursuant to the applicable provisions of the Charter of the city, as same may be amended from time to time.

(10) No such transfer or disposition as governed by this section shall be effectuated without the terms thereof having first been included in a contract executed by the city and the successful bidder. Such contract shall be in a form as provided by the Corporation Counsel and shall be subject to any and all other legal requirements relating to approvals of contracts to which the city is a party including approval requirements contained in any applicable state statute, the Charter of the city, this chapter and any other applicable provisions of the code of ordinances.

(11) Any assignment by the city of any liens it may own, as may be authorized pursuant to the state general statutes, shall be exempt from the provisions of this chapter and shall be governed by the applicable state statutory provisions. Nothing herein, however, shall prohibit compliance with any provisions of this chapter in relation to any such assignment if doing so would be in city's best interest. (Ord. passed 6-20-2005)

§ 38.070 EXCEPTIONS.

(A) Notwithstanding the requirements of §§ 38.068 and 38.069, neither a purchase order or a contract shall be required for the following:

(1) Natural gas or electric utilities;

(2) City employee expense reimbursements;

(3) Inter-city department charges; or

(4) Other expenditures at the discretion of the Director of Purchasing.

(B) The encumbrance of funds requirements of § 38.004 of this chapter apply to this section. (Ord. passed 6-20-2005)

§ 38.071 ISSUANCE OF PURCHASE ORDERS.

(A) *Issuance by the Director of Purchasing.* Requisitions by the using agency for the purchase of all commodities regardless of the amount and services under $50,000 shall be reviewed, encumbered and approved by the Budget Director and processed by the Purchasing Department prior to the issuance of a purchase order. In order to meet finance system requirements, purchase orders shall be issued for each contract. In such cases, contract language shall govern over purchase order language.

(B) *Required contents.* A purchase order shall not be complete without inclusion of terms and conditions approved by the Office of the Corporation Counsel, special terms and conditions required by federal and state government funding sources and the identity of the personnel of the using agency responsible for the administration of the transaction covered by the purchase order. Further, the Director of Purchasing shall review, with the consultation of the Corporation Counsel, if deemed necessary, the insurance and bond requirements in order to ascertain compliance with the standards set by the Director of Finance or his designee.
(Ord. passed 6-20-2005)

§ 38.072 EXECUTION OF CONTRACTS.

(A) *Execution by the Mayor.* The Mayor, on behalf of and in the name of the city, shall execute all contracts made by the city.

(B) *Role of the Corporation Counsel.* Upon award of a contract by the Director of Purchasing, the Corporation Counsel or an attorney acting under the authority of the Corporation Counsel shall approve all contracts, both as to form and compliance with all legal requirements of the Charter. In addition to such other legal requirements as may be examined by the Corporation Counsel, a contract shall not be deemed to comply with the legal requirements of the Charter if the Corporation Counsel determines that satisfactory proof of the availability of unexpended, appropriated funds does not exist or if the file does not include each of the following:

(1) A recitation, by the using agency, of the amount of funds to be expended by the terms of the contract, including, but not limited to, a breakdown of funds in each fiscal year of a multi-year transaction, including an estimate of capital funds in subsequent years;

(2) The special terms and conditions required by federal and state government funding sources and the identity of the personnel of the using agency responsible for the administration of the transaction covered by the contract; and

(3) The Corporation Counsel shall review the vendor-submitted insurance and bonds in order to ascertain compliance with the standards set by the Director of Finance or his designee.

(C) *Approval by the Board of Aldermen.* The following shall be subject to Board of Aldermen approval:

(1) All contracts with the exception of contracts for services which are the subject of an exemption hereunder in excess of $50,000;

(2) Any multi-year contract, accompanied by appropriate explanatory information prepared by the Director of Purchasing,

HIRING OF WATERBURY RESIDENTS ON CERTAIN PUBLICLY-FUNDED CONSTRUCTION PROJECTS

§ 34.15 PURPOSE.

The purpose of this subchapter is to increase the benefit to the City of Waterbury and its residents from the city's investment of public funds in certain publicly-funded construction projects to allow the city to recognize, as a benefit of such investment, a reduction in the amount of poverty and unemployment that would otherwise exist amongst its residents and also to help reduce the economic burden that would otherwise be placed on the city in having to provide alternative assistance to those residents who, but for their being hired pursuant to the provisions of this ordinance, would remain unemployed.
(Ord. passed 2-21-2012)

§ 34.16 FINDINGS.

The City of Waterbury finds that a substantial number of city residents are not being employed by contractors performing work on publicly-funded construction projects in the City of Waterbury and that the residents, therefor, are not receiving the maximum possible benefit from the City of Waterbury's investment of public funds in the projects. The city further finds that:

(A) Recent research of hiring patterns on construction projects reveals a pattern of low hiring of residents in favor of nonresidents whose hiring is draining significant resources from the city.

(1) Only 14% of work hours performed on the construction of the $138,000,000 waste water treatment plant in 1998 - 1999 were performed by residents;

(2) Only 10% of laborers hours on city street paving in 1999 were performed by residents;

(3) With an average wage of $21 per hour on tax-funded city construction work as exemplified by the waste water treatment plant construction project, more than $13,000,000 in wages was lost by city residents on that project. Due to typical turnover of those funds among businesses in the community, $13,000,000 - $26,000,000 of additional economic activity from the multiplier affect was lost to city businesses;

(4) As a result of the high percentage of noncity residents on construction projects, fewer Waterbury residents are able to be home owners, thus reducing property taxes to the city. For each resident who loses the opportunity to be a home owner, the city loses an estimated $2,000 in revenue per year.

(5) The migration of benefits caused by the high percentage of noncity residents on construction projects increases the burden on health care providers to provide uncompensated care to Waterbury residents without health insurance. Over the course of the waste water treatment plant project alone, for example, $5,000,000 in health and pension benefits were lost to city residents. If this subchapter were minimally met, it would double the wages and benefits going to city residents; and

(6) The extra cost to tax payers of the under-usage of apprentices on the project compared to what is permissible under state law is estimated at close to $1,000,000.

(B) Waterbury residents face higher rates of unemployment than other towns and cities in the region and state.

(1) The unemployment rate among construction workers who are residents of the city is 50% higher than the statewide unemployment rate among construction workers, and more than double the unemployment rate among construction workers in similarly-sized cities. For example, the Connecticut Department of Labor reports that in September 1999, 324 city residents applied for construction jobs at unemployment offices out of a total construction workforce of 3,600 (9%). Statewide, 3,908 applicants applied out of a total construction labor force of 63,800 (6%). In Danbury, 166 city residents applied out of a total construction workforce of 4,100 (4%).

(2) Since 1984 the city's unemployment rate has been consistently higher than the rate of unemployment in the Naugatuck Valley region and the state. Unemployment is especially severe in some neighborhoods, which faced up to 19% unemployment, compared to the city's 8% unemployment in the 1990 Census.

(C) Poverty is much greater and incomes are much lower in Waterbury than elsewhere in the region and state.

(1) According to the 1990 Census, 12.1% of the city's residents lived below the poverty level, compared to 2.7% in the rest of the region and 6.8% statewide.

(2) Median 1990 household income was $30,533 in Waterbury compared to $41,721 for the state, and compared to $45,000 - $67,500 for towns in the rest of the Naugatuck Valley region. Estimates updating this data to 1997 show little change. Residents on average earn $10,000 less per capita than the statewide average of $28,000.

(3) Poverty is even more pronounced in some neighborhoods with up to 30% of their residents in poverty.

(4) The average wage for residents coming off of welfare in the city is one of the lowest in the State of Connecticut at $5.93 per hour.

(5) Over one-third of female headed households are under poverty.

(6) City children are among the poorest in the State of Connecticut, 61% of students city-wide are eligible for reduced price meals versus 25% statewide.
(Ord. passed 2-21-2012)

§ 34.17 DEFINITIONS.

For the purpose of this subchapter, the following definitions shall apply unless the context clearly indicates or requires a different meaning.

ADMINISTRATOR. The person(s), city department or agency designated by the Mayor of the city with the responsibility of overseeing the implementation and enforcement of this subchapter.

APPRENTICE. Any person currently enrolled in, or who has completed, either an apprenticeship program that complies with the Apprenticeship Standards adopted by the Connecticut State Apprenticeship Council, a training program administered by or on behalf of a legally organized labor union, or a state approved standardized craft training program.

CITY. The City of Waterbury, Connecticut.

CITY FUNDS. Funds originating within the city pursuant to the city's taxing powers or authority to raise money through the sale of public bonds, permit tax abatements and enter into tax fixing agreements and tax increment financing agreements.

CONSTRUCTION. The process of building, altering, repairing, improving or demolishing any public infrastructure facility, including any public structure, public building or other public improvements of any kind to city property or other property or space in which the city has an interest. It does not include the routine operation, routine repair or routine maintenance of any existing public infrastructure facility, including structures, buildings or real property.

CONSTRUCTION PROJECT. Any project for which the primary purpose involves construction, as defined above, deconstruction, the remediation of any hazardous materials as defined in the Connecticut General Statutes, the rehabilitation or renovation of any structure or the creation, extension, reconstruction, reconditioning or rebuilding of any portion of a municipal infrastructure or public utility system.

CONTRACTOR. Any person hired by the city, directly or indirectly through an owner, to perform construction work on covered projects, including subcontractors hired by general contractors.

COVERED PROJECT. Any construction project taking place in the city with a value of $500,000 or greater, funded in whole or in part by city funds or funds administered by the city in accordance with federal or state grant or loan programs or any other federal or state programs pursuant to which the city is funding, in whole or in part, the project. This definition of ***COVERED PROJECT*** shall include funds derived from the aforementioned federal or state grant, loan or other programs only to the extent permitted by federal and state law. The value of the projects shall equal the total consideration to be paid to all contractors stated in each contract pursuant to which contractors are performing construction work on covered projects.

FIRST-SOURCE REFERRAL PROGRAM. A program whose purpose includes but is not limited to, job training and the referral of qualified residents to contractors. The ***FIRST-SOURCE REFERRAL PROGRAM*** shall use the Good Jobs! umbrella coalition of community groups and churches as a priority source for recruitment.

GOOD JOBS ADMINISTRATION BUDGET. The amount of funding required to oversee the implementation and enforcement of this subchapter in a given fiscal year.

HIRING GOAL. The 30% of the total worker hours on each covered project shall be performed by residents. At least 25% of construction trade jobs shall go to apprentices. At least 70% of all "new hires" (those workers hired by a contractor on a project, other than existing employees and those referred by union hiring halls with prior seniority in the case of a union job) shall be "economically disadvantaged" individuals, defined as those earning less than 150% of the poverty line at the time of application. A minimum of 5% of the construction workforce labor hours will be local resident, minority artisans. A minimum of 5% of the construction workforce labor hours will be women. A minimum of 10% of the total work hours shall be allocated for minorities. Contractors are expected to employ a workforce that represents the population of the city.

LIAISON COMMITTEE. The committee established by the Board of Aldermen to monitor compliance with the provisions of this subchapter, and make recommendations to the Administrator and the Board of Aldermen regarding enforcement. The committee shall convene monthly in a space open to the public. The committee shall be comprised of two representatives of the Board of Aldermen one to be appointed by the President of the Board of Aldermen and one to be appointed by the Minority Leader on the Board of Aldermen, one representative from the Board of Education to be appointed by the President of the Board of Education, one representative of the Workforce Development Board, and seven representatives who are appointed by the Board of Aldermen from a list of three nominees submitted by each of the following interested parties: one contractor, one union, one civil rights group, one community and one Human Rights Commission. The committee members shall serve for a term of two years, and this nomination and selection process shall be used to fill any vacancy.

NEW HIRE. Those workers hired by a contractor on a project, other than existing employees, and those referred by union hiring halls with prior seniority in the case of a union job.

OWNER. The person who enters into a contract with a contractor for work on a covered project other than the city.

PERSON. An individual or a company, partnership, foreign or domestic corporation, partnership, limited liability company or other business entity.

RESIDENT. Any person whose domicile is the City of Waterbury, Connecticut.

ROUTINE MAINTENANCE. Simple, small-scale activities (usually requiring only minimal skills or training) planned and performed at regular intervals and being necessary to (1) extend the life of, or to delay or prevent the premature failure of, any plant or system or of any structure or structural system, building component or equipment; or (2) protect against normal wear and tear; or (3) maintain a suitable aesthetic appearance. Examples of ***ROUTINE MAINTENANCE*** may include, but are not limited to, lawn or grass cutting, hedge trimming, painting, caulking, sealing, plumbing or electrical repairs, carpet cleaning or other cleaning performed at regular intervals.
(Ord. passed 2-21-2012)

§ 34.18 HIRING GOAL AND IMPLEMENTATION.

(A) All contractors performing work on covered projects shall make good faith efforts to satisfy the hiring goal.

(B) Any contractors that fail to meet the hiring goal shall be required to demonstrate to the Administrator's satisfaction that the contractor made good faith efforts to meet the hiring goal.

(C) (1) The Mayor of the city shall appoint an Administrator annually no later than June 30th to serve as the Administrator for the city's fiscal year following such appointment or within 30 days of a vacancy that might arise during any fiscal year. The foregoing not withstanding, an incumbent Administrator shall serve until their successor has been appointed and qualified. If, in the event of a vacancy, the Mayor fails to appoint a replacement Administrator within the first 30 days following the effective date of that vacancy, then the Board of Aldermen shall have the power to fill the vacancy provided that the Board does so:

(a) Within 30 days from the date upon which the power to make the appointment vested in the Board; or

(b) Prior to May 31st if the power to make the appointment vests in the Board on or after May 1st.

(2) Should the Board fail to make the appointment during any 30 day period it has to do so, or prior to May 31st if the power to make the appointment vests in the Board on or after May 1st, then

the power of appointment shall revert to the Mayor. Thereafter, throughout the remainder of the then current fiscal year, the power to make the appointment shall alternate between the Mayor and the Board, at 30 day intervals, until an appointment is made or until June 1st at which point in time the power to make the appointment shall vest in the Mayor.

(D) The Mayor shall annually, prior to the adoption of the city's budget for the then next fiscal year and after consultation with the Administrator and all relevant city department heads, establish a Good Jobs Administration Budget for the then next fiscal year and the Mayor shall include a line item in his annual budget submission to the Board of Aldermen sufficient to fund the Good Jobs Administration Budget. If, during the fiscal year in which the Mayor submits a given Good Jobs Administration Budget as part of his budget submission, the city has retained as liquidated damages, pursuant to its contracts for covered projects, an amount greater than or equal to the Good Jobs Administration Budget as then submitted by the Mayor, the city shall be required to fund the Good Jobs Administration Budget as submitted by the Mayor.
(Ord. passed 2-21-2012)

§ 34.19 REFERRAL MECHANISM.

(A) Prior to the commencement of construction on covered projects, the Administrator shall find out from the contractor the number of job positions to be created by the project by trade and the qualifications by job title. The Administrator shall also ensure that adequate job training is available to the extent necessary to achieve the hiring goal and that screening and referral mechanisms are in place so that contractors can access qualified residents. Additionally, the Administrator shall designate a first-source referral program for the city.

(B) In the event a contractor cannot satisfy the hiring goal through its own employees and union hiring halls, the contractor shall next utilize the first source referral program in order to satisfy the hiring goal. The contractor must wait five business days after a request has been submitted before advertising the position elsewhere.

(C) Qualifications required shall be only those relevant to the job. In satisfying the hiring goal, the contractor shall employ all qualified persons referred by the first source referral program. The contractor must utilize the first source referral program whenever its hiring needs increase and they are unable to comply with the hiring goals.
(Ord. passed 2-21-2012)

§ 34.20 MONITORING.

(A) The owner for a covered project shall require all construction contracts to comply with all provisions of this subchapter, and a copy of this subchapter shall be included with all contracts with

contractors performing construction work on covered projects. The subchapter must be a contractual obligation in all contracts.

(B) All contractors performing construction work on covered projects shall submit to the Administrator weekly certified payroll records within five working days of the end of each payroll period. The records must show the person-hours on a craft-by-craft basis and identify the address, social security number, hiring date, ethnicity, gender and trade (journeyperson or apprentice) of all employees on the project. All reports must have an original signature and be signed by an authorized officer or employee of the company. Failure to comply with the provisions of this division (B) may be deemed by the Administrator to be a violation of this subchapter. Any willful misrepresentation contained in the information requested pursuant to this division (B) shall be deemed by the Administrator to be a violation of this subchapter. Unless prohibited by federal, state or local law, all records in the city's possession shall be available for public inspection.

(C) The Administrator shall review all information provided pursuant to division (B) hereof and submit monthly reports to the Liaison Committee and to the Board of Aldermen summarizing the information.
(Ord. passed 2-21-2012)

§ 34.21 GOOD FAITH EFFORTS.

(A) Contractors shall be deemed to have made good faith efforts if they demonstrate to the satisfaction of the Administrator that they have done all of the following:

(1) Utilize the first source referral program to help satisfy the hiring goal;

(2) Notify the public in the city of the employment opportunities available on covered projects. The notification shall comprise a notice in a newspaper of general circulation in the city of employment opportunities, written notice to construction unions, community organizations and city high schools concerning same, and any other notice required by the Administrator. Contractors shall maintain records of responses to the notices received thereby. All notices must state that all qualified applicants will receive consideration without regard to race, color, religion, sex or national origin. The notice required by this division shall include a statement that the notice is provided pursuant to this subchapter;

(3) Maintain a file on the job site of the names and addresses of each worker referred by the first source referral program. The file shall indicate what action was taken with respect to each referred person, and if the person was not hired, the reasons therefore; provided, however, that this subchapter shall not be construed as requiring contractors to hire any persons who do not satisfy applicable job qualifications;

(4) Participate in State of Connecticut-approved local employment training programs in the city's area, or develop on-the-job training opportunities and participate and assist in any association or employer-group training program relevant to the contractor's employment needs;

(5) Regularly review and evaluate their personnel and promotional opportunities, encourage city residents to seek opportunities and establish a program to monitor compliance with this subchapter; and

(6) Utilize other means of obtaining employees who are residents of the city that are reasonably calculated to assist with achieving the hiring goals.

(B) Contractors shall provide the city with any documentation requested by the Administrator in order to establish compliance with this subchapter.
(Ord. passed 2-21-2012)

§ 34.22 CONTRACT REQUIREMENTS FOR COVERED SERVICES.

(A) This city shall include provisions in Chapter 38, entitled "Centralized Procurement System," of the Code of Waterbury, mandating that each contract for a covered project, as that term is defined herein, awarded pursuant to Chapter 38 include provisions addressing compliance with the provisions of this subchapter by the contractor or contractors thereunder and by any subcontractor or subcontractors performing work related to any such contract.

(B) Whenever provisions are included in a contract for a covered project pursuant to division (A) of this section, they shall include provisions establishing liquidated damages for the failure of any contractor or subcontractor to comply with the provisions of this subchapter. The liquidated damages shall be based on an estimate of the cost the city would incur in having to provide alternative employment opportunities, or alternative economic assistance, to those residents who would have benefited by the city's investment in the covered project if they had been hired by the contractor or subcontractor had they complied with the provisions of this subchapter.

(C) Whenever provisions regarding liquidated damages are included in a contract for a covered project pursuant to division (B) of this section, that contract shall, if applicable, also include provisions addressing the following matters:

(1) Weekly compliance reviews by the Administrator for the purpose of assessing compliance with the provisions of this subchapter, or the lack thereof;

(2) Requiring a separate certification of compliance by the Administrator prior to the payment of any funds by the city under any such contract;

(3) The assessment of liquidated damages while said contract is executory;

(4) The retention, by the city, of funds due from it under the contract in amounts sufficient to offset any assessment of liquidated damages outstanding at the time the funds are due from the city.
(Ord. passed 2-21-2012)

EXHIBIT "B"

U.S. Department of Housing and Urban Development
SF 424 – Certifications

SF 424

The SF 424 is part of the CPMP Annual Action Plan. SF 424 form fields are included in this document. Grantee information is linked from the 1CPMP.xls document of the CPMP tool.

SF 424

Complete the fillable fields (blue cells) in the table below. The other items are pre-filled with values from the Grantee Information Worksheet.

Date Submitted	Applicant Identifier	Type of Submission	
Date Received by state	State Identifier	Application	Pre-application
Date Received by HUD	Federal Identifier	☐ Construction	☐ Construction
		☐ Non Construction	☐ Non Construction
Applicant Information			
Jurisdiction		CT91194 WATERBURY	
City of Waterbury		877983022	
C/O Waterbury Development Corporation			
Waterbury	Connecticut		
06702	Country U.S.A.		
Employer Identification Number (EIN):		New Haven	
06-6001900		7/1	
Applicant Type:		**Specify Other Type if necessary:**	
Local Government: City			
Program Funding		**U.S. Department of Housing and Urban Development**	
Catalogue of Federal Domestic Assistance Numbers; Descriptive Title of Applicant Project(s); Areas Affected by Project(s) (cities, Counties, localities etc.); Estimated Funding			
Community Development Block Grant		14.218 Entitlement Grant	
CDBG Project Titles		Description of Areas Affected by CDBG Project(s)	
$ 1,996,547 CDBG Grant Amount	Additional HUD Grant(s) Levereged	Describe	
$Additional Federal Funds Leveraged		$Additional State Funds Leveraged	
$Locally Leveraged Funds		$Grantee Funds Leveraged	
$12,000 Anticipated Program Income		Other (Describe) $100,000 reprogrammed funds	
Total Funds Leveraged for CDBG-based Project(s)			
Home Investment Partnerships Program		14.239 HOME	
HOME Project Titles		Description of Areas Affected by HOME Project(s)	
$ 709,624 Home Grant Amount	$Additional HUD Grant(s) Leveraged	Describe	
$Additional Federal Funds Leveraged		$Additional State Funds Leveraged	
$Locally Leveraged Funds		$Grantee Funds Leveraged	

$16,300 Anticipated Program Income	Other (Describe)
Total Funds Leveraged for HOME-based Project(s)	

Housing Opportunities for People with AIDS	14.241 HOPWA	
HOPWA Project Titles	Description of Areas Affected by HOPWA Project(s)	
$HOPWA Grant Amount	$Additional HUD Grant(s) Leveraged	Describe
$Additional Federal Funds Leveraged	$Additional State Funds Leveraged	
$Locally Leveraged Funds	$Grantee Funds Leveraged	
$Anticipated Program Income	Other (Describe)	
Total Funds Leveraged for HOPWA-based Project(s)		

Emergency Solutions Grants Program	14.231 ESG	
ESG Project Titles	Description of Areas Affected by ESG Project(s)	
$137,010 ESG Grant Amount	$Additional HUD Grant(s) Leveraged	Describe
$Additional Federal Funds Leveraged	$Additional State Funds Leveraged	
$Locally Leveraged Funds	$Grantee Funds Leveraged	
$Anticipated Program Income	Other (Describe)	
Total Funds Leveraged for ESG-based Project(s)		

Congressional Districts of: CT-003 & CT-005		Is application subject to review by state Executive Order 12372 Process?	
Applicant Districts	Project Districts	☐ Yes	This application was made available to the state EO 12372 process for review on DATE
Is the applicant delinquent on any federal debt? If "Yes" please include an additional document explaining the situation.		☒ No	Program is not covered by EO 12372
☐ Yes	☒ No	☐ N/A	Program has not been selected by the state for review

Person to be contacted regarding this application		
Kevin	M.	DelGobbo
Chief Executive Officer	Phone: 203-346-2607	Fax: 203-346-3910
Email: DelGobbo@wdconline.org	Website: www.wdconline.org	Other:
Signature of Authorized Representative Neil M. O'Leary, Mayor		Date Signed 7/10

CERTIFICATIONS

In accordance with the applicable statutes and the regulations governing the consolidated plan regulations, the jurisdiction certifies that:

Affirmatively Further Fair Housing – The jurisdiction will affirmatively further fair housing, which means it will conduct an analysis of impediments to fair housing choice within the jurisdiction, take appropriate actions to overcome the effects of any impediments identified through that analysis, and maintain records reflecting that analysis and actions in this regard.

Anti-displacement and Relocation Plan -- It will comply with the acquisition and relocation requirements of the Uniform Relocation Assistance and Real Property Acquisition Policies Act of 1970, as amended, and implementing regulations at 49 CFR 24; and it has in effect and is following a residential antidisplacement and relocation assistance plan required under section 104(d) of the Housing and Community Development Act of 1974, as amended, in connection with any activity assisted with funding under the CDBG or HOME programs.

Drug Free Workplace – It will or will continue to provide a drug-free workplace by:

1. Publishing a statement notifying employees that the unlawful manufacture, distribution, dispensing, possession, or use of a controlled substance is prohibited in the grantee's workplace and specifying the actions that will be taken against employees for violation of such prohibition;

2. Establishing an ongoing drug-free awareness program to inform employees about -

   (a) The dangers of drug abuse in the workplace;
   (b) The grantee's policy of maintaining a drug-free workplace;
   (c) Any available drug counseling, rehabilitation, and employee assistance programs; and
   (d) The penalties that may be imposed upon employees for drug abuse violations occurring in the workplace;

3. Making it a requirement that each employee to be engaged in the performance of the grant be given a copy of the statement required by paragraph 1;

4. Notifying the employee in the statement required by paragraph 1 that, as a condition of employment under the grant, the employee will -

   (a) Abide by the terms of the statement; and

   (b) Notify the employer in writing of his or her conviction for a violation of a criminal drug statute occurring in the workplace no later than five calendar days after such conviction;

5. Notifying the agency in writing, within ten calendar days after receiving notice under subparagraph 4(b) from an employee or otherwise receiving actual notice of such conviction. Employers of convicted employees must provide notice, including position title, to every grant officer or other designee on whose grant activity the convicted employee was working, unless the Federal agency has designated a central point for the receipt of such notices. Notice shall include the identification number(s) of each affected grant;

6. Taking one of the following actions, within 30 calendar days of receiving notice under subparagraph 4(b), with respect to any employee who is so convicted -

(a) Taking appropriate personnel action against such an employee, up to and including termination, consistent with the requirements of the Rehabilitation Act of 1973, as amended; or

(b) Requiring such employee to participate satisfactorily in a drug abuse assistance or rehabilitation program approved for such purposes by a Federal, State, or local health, law enforcement, or other appropriate agency;

7. Making a good faith effort to continue to maintain a drug-free workplace through implementation of paragraphs 1, 2, 3, 4, 5 and 6.

Anti-Lobbying -- To the best of the jurisdiction's knowledge and belief:

1. No Federal appropriated funds have been paid or will be paid, by or on behalf of it, to any person for influencing or attempting to influence an officer or employee of any agency, a Member of Congress, an officer or employee of Congress, or an employee of a Member of Congress in connection with the awarding of any Federal contract, the making of any Federal grant, the making of any Federal loan, the entering into of any cooperative agreement, and the extension, continuation, renewal, amendment, or modification of any Federal contract, grant, loan, or cooperative agreement;

2. If any funds other than Federal appropriated funds have been paid or will be paid to any person for influencing or attempting to influence an officer or employee of any agency, a Member of Congress, an officer or employee of Congress, or an employee of a Member of Congress in connection with this Federal contract, grant, loan, or cooperative agreement, it will complete and submit Standard Form-LLL, "Disclosure Form to Report Lobbying," in accordance with its instructions; and

3. It will require that the language of paragraph 1 and 2 of this anti-lobbying certification be included in the award documents for all subawards at all tiers (including subcontracts, subgrants, and contracts under grants, loans, and cooperative agreements) and that all subrecipients shall certify and disclose accordingly.

Authority of Jurisdiction -- The consolidated plan is authorized under State and local law (as applicable) and the jurisdiction possesses the legal authority to carry out the programs for which it is seeking funding, in accordance with applicable HUD regulations.

Consistency with plan -- The housing activities to be undertaken with CDBG, HOME, ESG, and HOPWA funds are consistent with the strategic plan.

Section 3 -- It will comply with section 3 of the Housing and Urban Development Act of 1968, and implementing regulations at 24 CFR Part 135.

Neil M. O'Leary — Date: 1/10/13

Mayor, City of Waterbury

EXHIBIT "C"
CFR Procurement Requirements
24 C.F.R. §84.40 – 84.48

Code of Federal Regulations
Title 24. Housing and Urban Development
Subtitle A. Office of the Secretary, Department of Housing and Urban Development
Part 84. Uniform Administrative Requirements for Grants and Agreements with Institutions of Higher Education, Hospitals, and Other Non--Profit Organizations (Refs & Annos)
Subpart C. Post--Award Requirements
Procurement Standards

24 C.F.R. § 84.40

§ 84.40 Purpose of procurement standards.

Currentness

Sections 84.41 through 84.48 set forth standards for use by recipients in establishing procedures for the procurement of supplies and other expendable property, equipment, real property and other services with Federal funds. These standards are furnished to ensure that such materials and services are obtained in an effective manner and in compliance with the provisions of applicable Federal statutes and executive orders. No additional procurement standards or requirements shall be imposed by HUD upon recipients, unless specifically required by Federal statute or executive order or approved by OMB.

SOURCE: 59 FR 47011, Sept. 13, 1994; 65 FR 30499, May 11, 2000, unless otherwise noted.

AUTHORITY: 42 U.S.C. 3535(d).

Current through January 16, 2014; 79 FR 3039

End of Document

© 2014 Thomson Reuters. No claim to original U.S. Government Works.

Code of Federal Regulations
Title 24. Housing and Urban Development
Subtitle A. Office of the Secretary, Department of Housing and Urban Development
Part 84. Uniform Administrative Requirements for Grants and Agreements with Institutions of Higher Education, Hospitals, and Other Non–Profit Organizations (Refs & Annos)
Subpart C. Post–Award Requirements
Procurement Standards

24 C.F.R. § 84.41

§ 84.41 Recipient responsibilities.

Currentness

The standards contained in this section do not relieve the recipient of the contractual responsibilities arising under its contract(s). The recipient is the responsible authority, without recourse to HUD, regarding the settlement and satisfaction of all contractual and administrative issues arising out of procurements entered into in support of an award or other agreement. This includes disputes, claims, protests of award, source evaluation or other matters of a contractual nature. Matters concerning violation of statute are to be referred to such Federal, State or local authority as may have proper jurisdiction.

SOURCE: 59 FR 47011, Sept. 13, 1994; 65 FR 30499, May 11, 2000, unless otherwise noted.

AUTHORITY: 42 U.S.C. 3535(d).

Current through January 16, 2014; 79 FR 3039

End of Document

© 2014 Thomson Reuters. No claim to original U.S. Government Works.

Code of Federal Regulations
Title 24. Housing and Urban Development
Subtitle A. Office of the Secretary, Department of Housing and Urban Development
Part 84. Uniform Administrative Requirements for Grants and Agreements with Institutions of Higher Education, Hospitals, and Other Non–Profit Organizations (Refs & Annos)
Subpart C. Post–Award Requirements
Procurement Standards

24 C.F.R. § 84.42

§ 84.42 Codes of conduct.

Currentness

The recipient shall maintain written standards of conduct governing the performance of its employees engaged in the award and administration of contracts. No employee, officer, or agent shall participate in the selection, award, or administration of a contract supported by Federal funds if a real or apparent conflict of interest would be involved. Such a conflict would arise when the employee, officer, or agent, any member of his or her immediate family, his or her partner, or an organization which employs or is about to employ any of the parties indicated herein, has a financial or other interest in the firm selected for an award. The officers, employees, and agents of the recipient shall neither solicit nor accept gratuities, favors, or anything of monetary value from contractors, or parties to subagreements. However, recipients may set standards for situations in which the financial interest is not substantial or the gift is an unsolicited item of nominal value. The standards of conduct shall provide for disciplinary actions to be applied for violations of such standards by officers, employees, or agents of the recipient.

SOURCE: 59 FR 47011, Sept. 13, 1994; 65 FR 30499, May 11, 2000, unless otherwise noted.

AUTHORITY: 42 U.S.C. 3535(d).

Current through January 16, 2014; 79 FR 3039

End of Document

© 2014 Thomson Reuters. No claim to original U.S. Government Works.

Code of Federal Regulations
Title 24. Housing and Urban Development
Subtitle A. Office of the Secretary, Department of Housing and Urban Development
Part 84. Uniform Administrative Requirements for Grants and Agreements with Institutions of Higher Education, Hospitals, and Other Non–Profit Organizations (Refs & Annos)
Subpart C. Post–Award Requirements
Procurement Standards

24 C.F.R. § 84.43

§ 84.43 Competition.

Currentness

All procurement transactions shall be conducted in a manner to provide, to the maximum extent practical, open and free competition. The recipient shall be alert to organizational conflicts of interest as well as noncompetitive practices among contractors that may restrict or eliminate competition or otherwise restrain trade. In order to ensure objective contractor performance and eliminate unfair competitive advantage, contractors that develop or draft specifications, requirements, statements of work, invitations for bids and/or requests for proposals shall be excluded from competing for such procurements. Awards shall be made to the bidder or offeror whose bid or offer is responsive to the solicitation and is most advantageous to the recipient, price, quality and other factors considered. The other factors shall include the bidder's or offeror's compliance with Section 3 of the Housing and Urban Development Act of 1968 (12 U.S.C. 1701u), hereafter referred to as "Section 3." Section 3 provides that, to the greatest extent feasible, and consistent with existing Federal, State, and local laws, and regulations, economic opportunities generated by certain HUD financial assistance shall be directed to low- and very low-income persons. Solicitations shall clearly set forth all requirements that the bidder or offeror shall fulfill in order for the bid or offer to be evaluated by the recipient. Any and all bids or offers may be rejected when it is in the recipient's interest to do so.

SOURCE: 59 FR 47011, Sept. 13, 1994; 65 FR 30499, May 11, 2000, unless otherwise noted.

AUTHORITY: 42 U.S.C. 3535(d).

Current through January 16, 2014; 79 FR 3039

Code of Federal Regulations
Title 24. Housing and Urban Development
Subtitle A. Office of the Secretary, Department of Housing and Urban Development
Part 84. Uniform Administrative Requirements for Grants and Agreements with Institutions of Higher Education, Hospitals, and Other Non–Profit Organizations (Refs & Annos)
Subpart C. Post–Award Requirements
Procurement Standards

24 C.F.R. § 84.44

§ 84.44 Procurement procedures.

Effective: January 28, 2008
Currentness

(a) All recipients shall establish written procurement procedures. These procedures shall provide for, at a minimum, that paragraphs (a)(1), (a)(2) and (a)(3) of this section apply.

(1) Recipients avoid purchasing unnecessary items.

(2) Where appropriate, an analysis is made of lease and purchase alternatives to determine which would be the most economical and practical procurement for the Federal Government.

(3) Solicitations for goods and services provide for all of the following.

(i) A clear and accurate description of the technical requirements for the material, product or service to be procured. In competitive procurements, such a description shall not contain features which unduly restrict competition.

(ii) Requirements which the bidder/offeror must fulfill and all other factors to be used in evaluating bids or proposals.

(iii) A description, whenever practicable, of technical requirements in terms of functions to be performed or performance required, including the range of acceptable characteristics or minimum acceptable standards.

(iv) The specific features of "brand name or equal" descriptions that bidders are required to meet when such items are included in the solicitation.

(v) The acceptance, to the extent practicable and economically feasible, of products and services dimensioned in the metric system of measurement.

(vi) Preference, to the extent practicable and economically feasible, for products and services that conserve natural resources and protect the environment and are energy efficient.

(b) Positive efforts shall be made by recipients to utilize small businesses, minority-owned firms, and women's business enterprises, whenever possible. Recipients of Federal awards shall take all of the following steps to further this goal.

(1) Ensure that small businesses, minority-owned firms, and women's business enterprises are used to the fullest extent practicable.

(2) Make information on forthcoming opportunities available and arrange time frames for purchases and contracts to encourage and facilitate participation by small businesses, minority-owned firms, and women's business enterprises.

(3) Consider in the contract process whether firms competing for larger contracts intend to subcontract with small businesses, minority-owned firms, and women's business enterprises.

(4) Encourage contracting with consortiums of small businesses, minority-owned firms and women's business enterprises when a contract is too large for one of these firms to handle individually.

(5) Use the services and assistance, as appropriate, of such organizations as the Small Business Administration and the Department of Commerce's Minority Business

Development Agency in the solicitation and utilization of small businesses, minority-owned firms and women's business enterprises.

(c) The type of procuring instruments used (e.g., fixed price contracts, cost reimbursable contracts, purchase orders, and incentive contracts) shall be determined by the recipient but shall be appropriate for the particular procurement and for promoting the best interest of the program or project involved. The "cost-plus-a-percentage-of-cost" or "percentage of construction cost" methods of contracting shall not be used.

(d) Contracts shall be made only with responsible contractors who possess the potential ability to perform successfully under the terms and conditions of the proposed procurement. Consideration shall be given to such matters as contractor integrity; compliance with public policy, including, where applicable, Section 3 of the Housing and Urban Development Act of 1968 (12 U.S.C. 1701u); record of past performance; and financial and technical resources or accessibility to other necessary resources. In certain circumstances, contracts with certain parties are restricted by implementation of Executive Orders 12549 and 12689, "Debarment and Suspension," at 2 CFR part 2424.

(e) Recipients shall, on request, make available for the Federal awarding agency, pre-award review and procurement documents, such as requests for proposals or invitations for bids, independent cost estimates, etc., when any of the following conditions apply.

(1) A recipient's procurement procedures or operation fails to comply with the procurement standards in HUD's implementation of Circular A–110.

(2) The procurement is expected to exceed $100,000 or the small purchase threshold fixed at 41 U.S.C. 403 (11), whichever is greater, and is to be awarded without competition or only one bid or offer is received in response to a solicitation.

(3) The procurement, which is expected to exceed the small purchase threshold, specifies a "brand name" product.

(4) The proposed award over the small purchase threshold is to be awarded to other than the apparent low bidder under a sealed bid procurement.

(5) A proposed contract modification changes the scope of a contract or increases the contract amount by more than the amount of the small purchase threshold.

Credits
[72 FR 73492, Dec. 27, 2007]

SOURCE: 59 FR 47011, Sept. 13, 1994; 65 FR 30499, May 11, 2000, unless otherwise noted.

AUTHORITY: 42 U.S.C. 3535(d).

Current through January 16, 2014; 79 FR 3039

End of Document

© 2014 Thomson Reuters. No claim to original U.S. Government Works.

Code of Federal Regulations
Title 24. Housing and Urban Development
Subtitle A. Office of the Secretary, Department of Housing and Urban Development
Part 84. Uniform Administrative Requirements for Grants and Agreements with Institutions of Higher Education, Hospitals, and Other Non–Profit Organizations (Refs & Annos)
Subpart C. Post–Award Requirements
Procurement Standards

24 C.F.R. § 84.45

§ 84.45 Cost and price analysis.

Currentness

Some form of cost or price analysis shall be made and documented in the procurement files in connection with every procurement action. Price analysis may be accomplished in various ways, including the comparison of price quotations submitted, market prices and similar indicia, together with discounts. Cost analysis is the review and evaluation of each element of cost to determine reasonableness, allocability and allowability.

SOURCE: 59 FR 47011, Sept. 13, 1994; 65 FR 30499, May 11, 2000, unless otherwise noted.

AUTHORITY: 42 U.S.C. 3535(d).

Current through January 16, 2014; 79 FR 3039

End of Document

© 2014 Thomson Reuters. No claim to original U.S. Government Works.

Code of Federal Regulations
Title 24. Housing and Urban Development
Subtitle A. Office of the Secretary, Department of Housing and Urban Development
Part 84. Uniform Administrative Requirements for Grants and Agreements with Institutions of Higher Education, Hospitals, and Other Non–Profit Organizations (Refs & Annos)
Subpart C. Post–Award Requirements
Procurement Standards

24 C.F.R. § 84.46

§ 84.46 Procurement records.

Currentness

Procurement records and files for purchases in excess of the small purchase threshold shall include the following at a minimum:

(a) Basis for contractor selection;

(b) Justification for lack of competition when competitive bids or offers are not obtained; and

(c) Basis for award cost or price.

SOURCE: 59 FR 47011, Sept. 13, 1994; 65 FR 30499, May 11, 2000, unless otherwise noted.

AUTHORITY: 42 U.S.C. 3535(d).

Current through January 16, 2014; 79 FR 3039

End of Document

© 2014 Thomson Reuters. No claim to original U.S. Government Works.

Code of Federal Regulations
Title 24. Housing and Urban Development
Subtitle A. Office of the Secretary, Department of Housing and Urban Development
Part 84. Uniform Administrative Requirements for Grants and Agreements with Institutions of Higher Education, Hospitals, and Other Non–Profit Organizations (Refs & Annos)
Subpart C. Post–Award Requirements
Procurement Standards

24 C.F.R. § 84.47

§ 84.47 Contract administration.

Currentness

A system for contract administration shall be maintained to ensure contractor conformance with the terms, conditions and specifications of the contract and to ensure adequate and timely follow up of all purchases. Recipients shall evaluate contractor performance and document, as appropriate, whether contractors have met the terms, conditions and specifications of the contract.

SOURCE: 59 FR 47011, Sept. 13, 1994; 65 FR 30499, May 11, 2000, unless otherwise noted.

AUTHORITY: 42 U.S.C. 3535(d).

Current through January 16, 2014; 79 FR 3039

End of Document

© 2014 Thomson Reuters. No claim to original U.S. Government Works.

Code of Federal Regulations
Title 24. Housing and Urban Development
Subtitle A. Office of the Secretary, Department of Housing and Urban Development
Part 84. Uniform Administrative Requirements for Grants and Agreements with Institutions of Higher Education, Hospitals, and Other Non–Profit Organizations (Refs & Annos)
Subpart C. Post–Award Requirements
Procurement Standards

24 C.F.R. § 84.48

§ 84.48 Contract provisions.

Currentness

The recipient shall include, in addition to provisions to define a sound and complete agreement, the following provisions in all contracts. The following provisions shall also be applied to subcontracts.

(a) Contracts in excess of the small purchase threshold shall contain contractual provisions or conditions that allow for administrative, contractual, or legal remedies in instances in which a contractor violates or breaches the contract terms, and provide for such remedial actions as may be appropriate.

(b) All contracts in excess of the small purchase threshold shall contain suitable provisions for termination by the recipient, including the manner by which termination shall be effected and the basis for settlement. In addition, such contracts shall describe conditions under which the contract may be terminated for default as well as conditions where the contract may be terminated because of circumstances beyond the control of the contractor.

(c) Except as otherwise required by statute, an award that requires the contracting (or subcontracting) for construction or facility improvements shall provide for the recipient to follow its own requirements relating to bid guarantees, performance bonds, and payment bonds unless the construction contract or subcontract exceeds $100,000. For those contracts or subcontracts exceeding $100,000, HUD may accept the bonding policy and requirements of the recipient, provided HUD has made a determination that the Federal Government's interest is adequately

WestlawNext © 2014 Thomson Reuters. No claim to original U.S. Government Works.

protected. If such a determination has not been made, the minimum requirements shall be as follows:

(1) A bid guarantee from each bidder equivalent to five percent of the bid price. The "bid guarantee" shall consist of a firm commitment such as a bid bond, certified check, or other negotiable instrument accompanying a bid as assurance that the bidder shall, upon acceptance of his bid, execute such contractual documents as may be required within the time specified.

(2) A performance bond on the part of the contractor for 100 percent of the contract price. A "performance bond" is one executed in connection with a contract to secure fulfillment of all the contractor's obligations under such contract.

(3) A payment bond on the part of the contractor for 100 percent of the contract price. A "payment bond" is one executed in connection with a contract to assure payment as required by statute of all persons supplying labor and material in the execution of the work provided for in the contract.

(4) Where bonds are required in the situations described herein, the bonds shall be obtained from companies holding certificates of authority as acceptable sureties pursuant to 31 CFR part 223, "Surety Companies Doing Business with the United States."

(d) All negotiated contracts (except those for less than the small purchase threshold) awarded by recipients shall include a provision to the effect that the recipient, HUD, the Comptroller General of the United States, or any of their duly authorized representatives, shall have access to any books, documents, papers and records of the contractor which are directly pertinent to a specific program for the purpose of making audits, examinations, excerpts and transcriptions.

(e) All contracts, including small purchases, awarded by recipients and their contractors shall contain the procurement provisions of Appendix A to this rule, as applicable.

SOURCE: 59 FR 47011, Sept. 13, 1994; 65 FR 30499, May 11, 2000, unless otherwise noted.

AUTHORITY: 42 U.S.C. 3535(d).

Current through January 16, 2014; 79 FR 3039

EXHIBIT "D"

List of Current WDC Projects

Waterbury Development Corporation
Current Programs/Projects

Programs/Grants (Project Manager)[1]

Community Development Block Grant (Diane Toolan)
Emergency Solutions Grant (Diane Toolan)
Neighborhood Stabilization Program (Diane Toolan)
Neighborhood Stabilization Program III (Diane Toolan)
HOME (Tina Lubus)
HUD – Neighborhood Initiative Grant (Diane Toolan)
HUD – Economic Development Initiative Grant (Diane Toolan)
DECD Brownfield Study Program (Todd Montello)
DECD Brownfield Municipal Pilot Program (Todd Montello)
EPA 2009 Assessment Grant (Todd Montello)
EPA 2010 Assessment Grant (Todd Montello)
EPA 2012 Assessment Grant (Todd Montello)
EPA Dual Action Grant (Andrew Martelli)

Projects (Project Manager)[1]

East End Public Facility Acquisition Project – Former Mattatuck Manufacturing Site (Andrew Martelli)
Cherry Street Industrial Park Remediation & Redevelopment Project (Todd Montello)
Waterbury Industrial Commons Remediation & Redevelopment Project (Andrew Martelli)
Municipal Stadium Project (Andrew Martelli)
UCONN Acquisition & Redevelopment (The Rectory) Project (Andrew Martelli)
MacDermid Property Acquisition/Public Works Facility Project (Todd Montello – Acquisition Phase/Andrew Martelli – Construction Phase)
Mill Street Abatement, Demolition, Remediation & Reuse Project (Andrew Martelli)
Meadow Street Abatement, Demolition & Reuse Project (Andrew Martelli)
Mad River Development Regional Brownfield Remediation & Reuse Project (Todd Montello)

[1]. The City will be notified immediately, in writing, of PM designation changes.

Place holder for the Curtin Park Renovation Project Authorization Letter between the City of Waterbury and the Waterbury Development Corporation. This Project Authorization Letter is an agenda item on the October 19, 2026 Board of Aldermen Meeting.

Attachment F

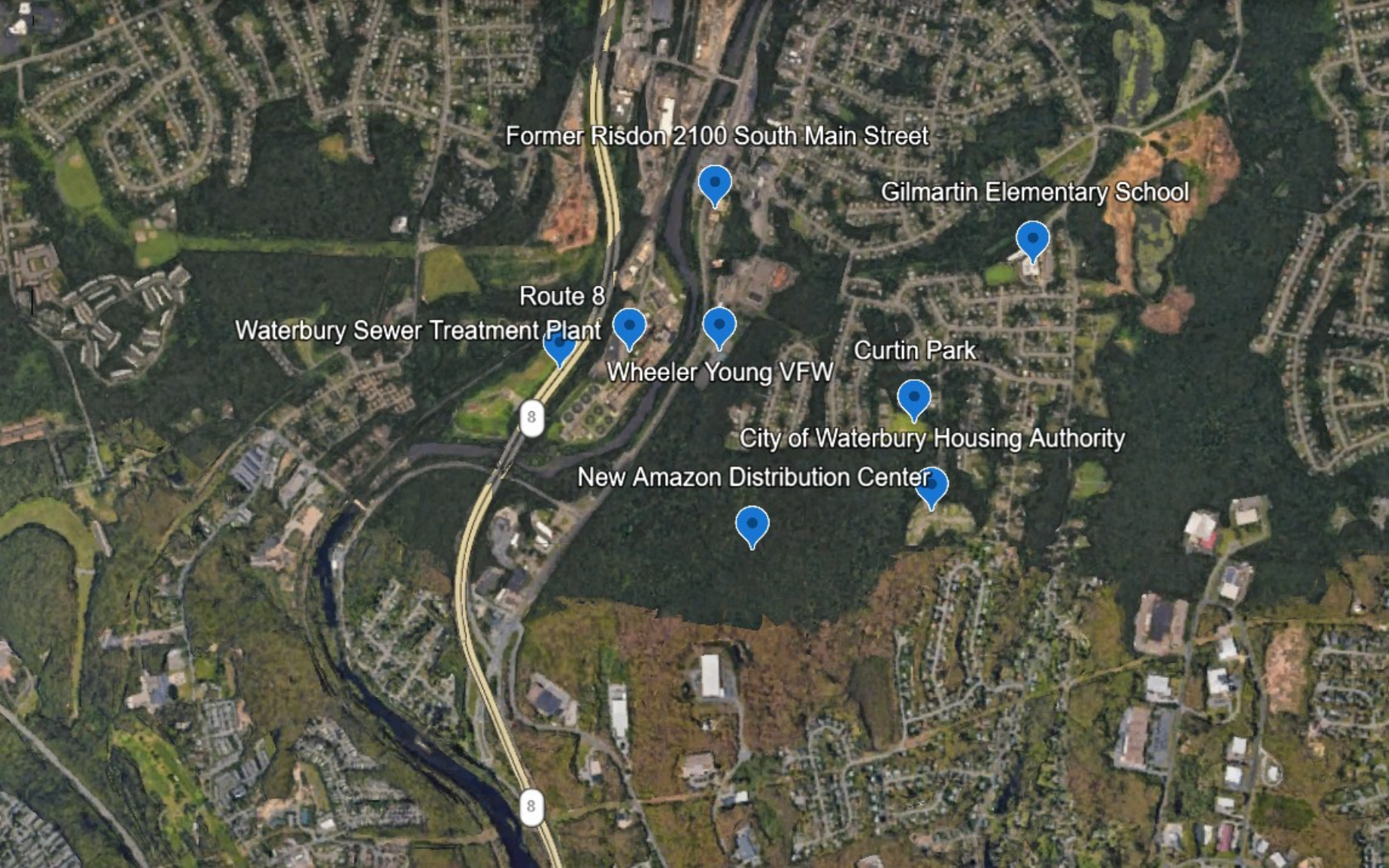
Former Risdon 2100 South Main Street
Gilmartin Elementary School
Route 8
Waterbury Sewer Treatment Plant
Wheeler Young VFW
Curtin Park
City of Waterbury Housing Authority
New Amazon Distribution Center
8
8

Attachment G

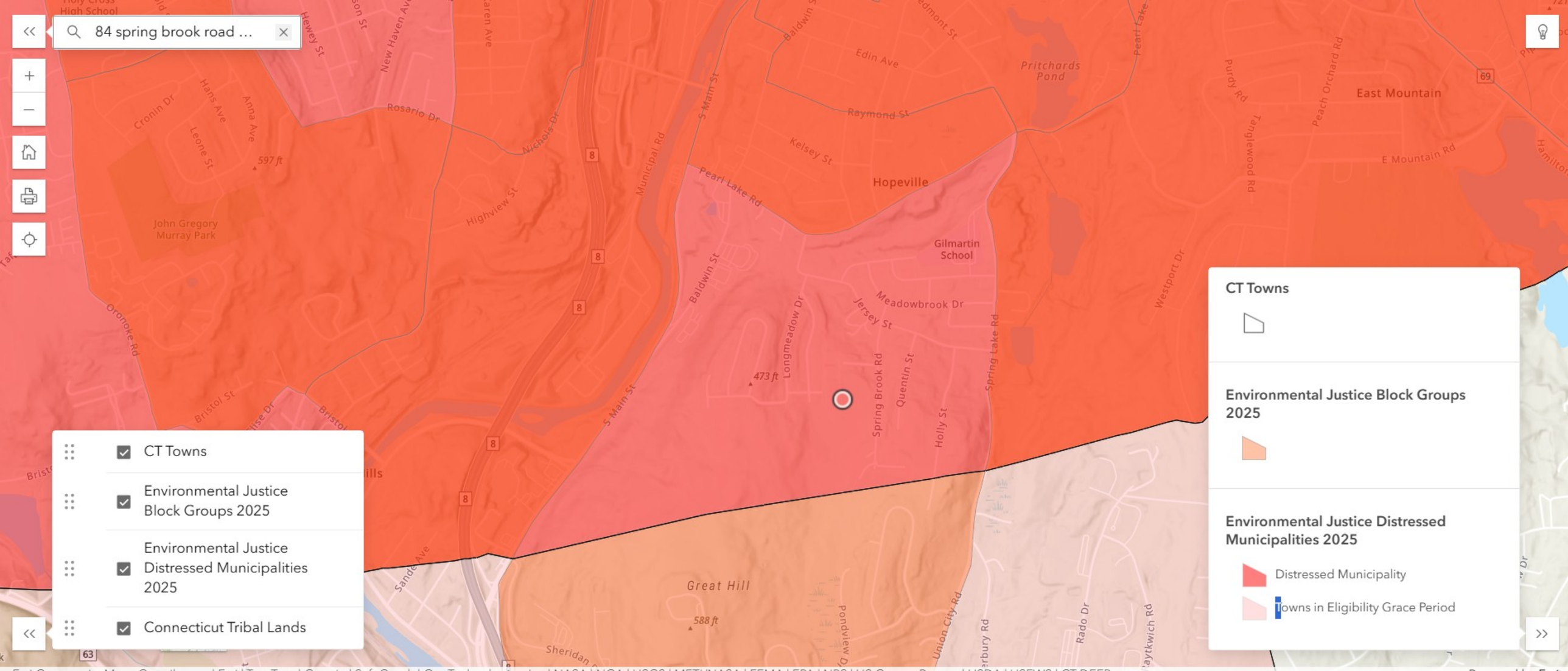
84 spring brook road ...
CT Towns
Environmental Justice Block Groups 2025
Environmental Justice Distressed Municipalities 2025
Connecticut Tribal Lands
CT Towns
Environmental Justice Block Groups 2025
Environmental Justice Distressed Municipalities 2025
Distressed Municipality
Towns in Eligibility Grace Period
Hopeville
East Mountain
Gilmartin School
Great Hill
Pritchards Pond
John Gregory Murray Park
Meadowbrook Dr
Spring Brook Rd
Longmeadow Dr
Quentin St
Holly St
Spring Lake Rd
Jersey St
Baldwin St
S Main St
Municipal Rd
Pearl Lake Rd
Raymond St
Kelsey St
Edin Ave
Rosario Dr
Highview St
Nichols Dr
Oronoke Rd
Bristol St
Sande Ave
Pondview Dr
Union City Rd
Rado Dr
Westport Dr
Purdy Rd
Peach Orchard Rd
Tanglewood Rd
E Mountain Rd
473 ft
597 ft
588 ft

Attachment H

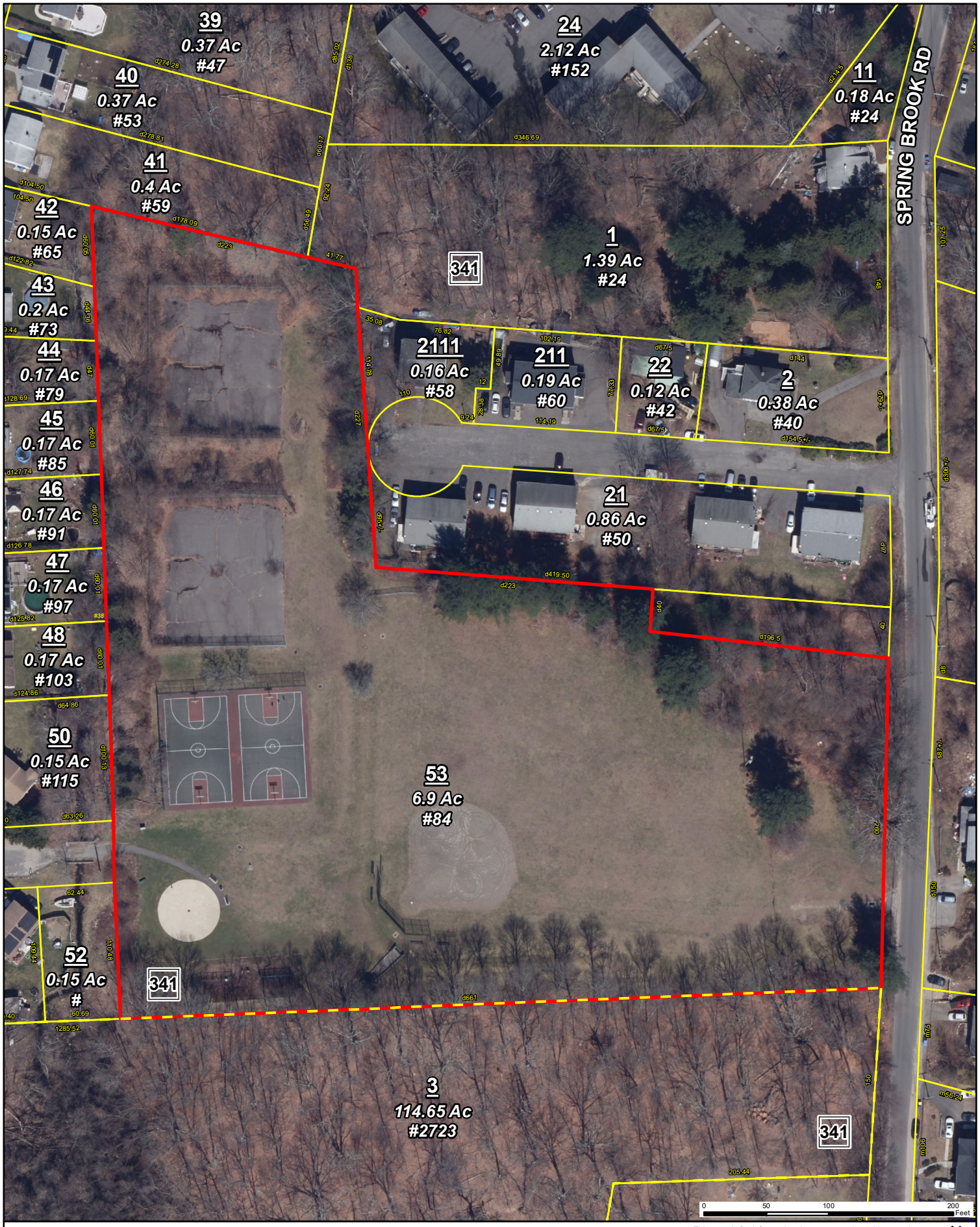

City of Waterbury
Public Works Department

MBL: **0549-0341-0053**

ADDRESS: 84 SPRING BROOK RD

This map is for informational purposes only and has not been prepared for, or suitable for legal, engineering, or surveying purposes. Users of this information should review or consult the primary data and information sources to verify the usability of the information. The City of Waterbury makes no warranties, express or implied, as to the use of the information obtained herein.

N

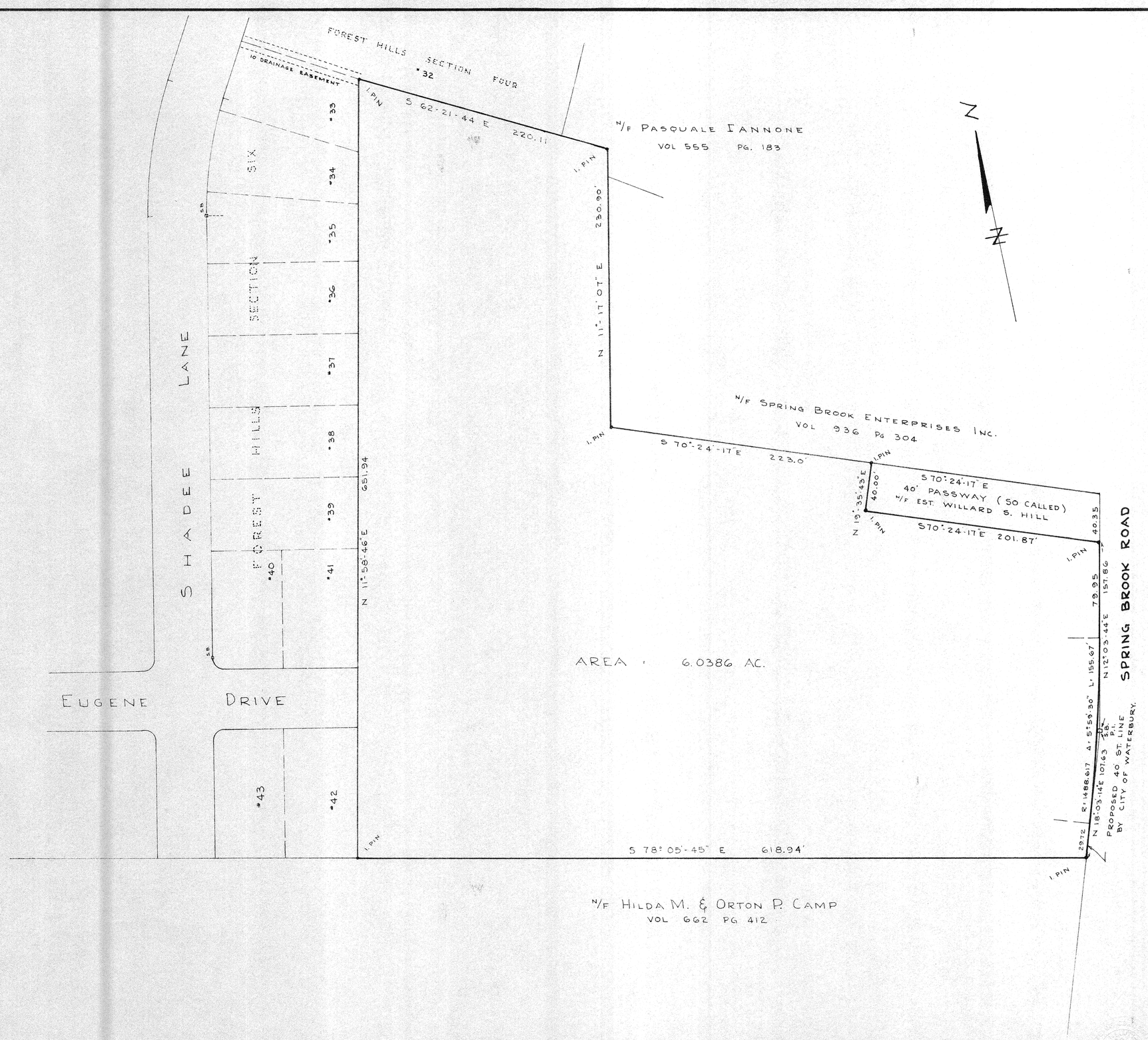

L. T. SCOTT-SMITH CO.
PROFESSIONAL ENGINEER & LAND SURVEYOR
WATERBURY, CONN.

SPRING BROOK ROAD TRACT
PROPERTY MAP
PREPARED FOR
THE CITY OF WATERBURY
PARK DEPARTMENT
WATERBURY, CONN.
1"=40 MAR. 1973 K15-5

I HEREBY CERTIFY THAT THIS MAP IS SUBSTANTIALLY CORRECT AND IN CONFORMANCE WITH CLASS A-2 CODE OF CONNECTICUT TECHNICAL COUNCIL, INC.

Keith T. Scott-Smith
REGISTERED LAND SURVEYOR

24-4-7 Acc. ~~23853~~ 22353

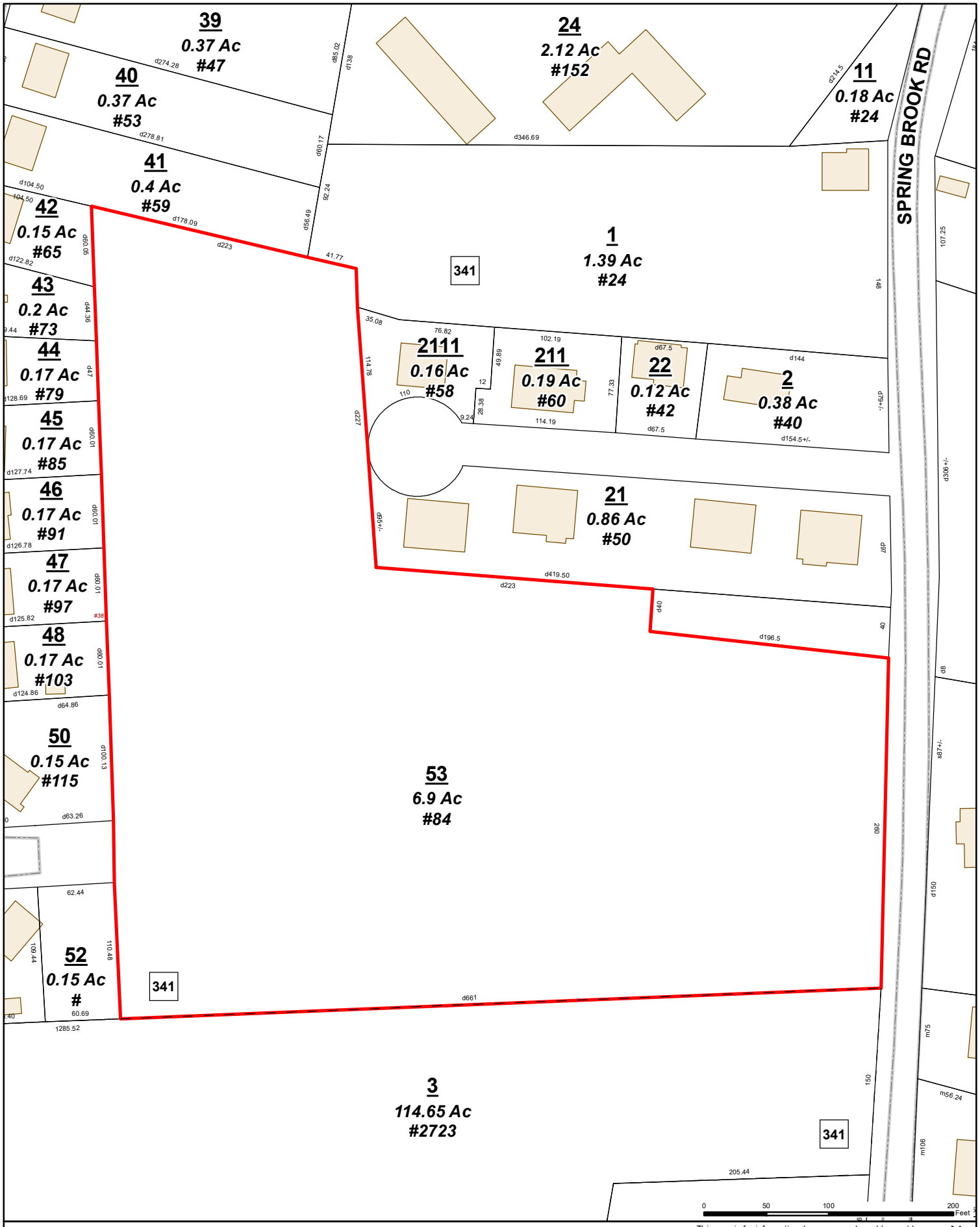

City of Waterbury
Public Works Department

MBL: **0549-0341-0053**

ADDRESS: 84 SPRING BROOK RD

This map is for informational purposes only and has not been prepared for, or suitable for legal, engineering, or surveying purposes. Users of this information should review or consult the primary data and information sources to verify the usability of the information. The City of Waterbury makes no warranties, express or implied, as to the use of the information obtained herein.

N

Attachment I

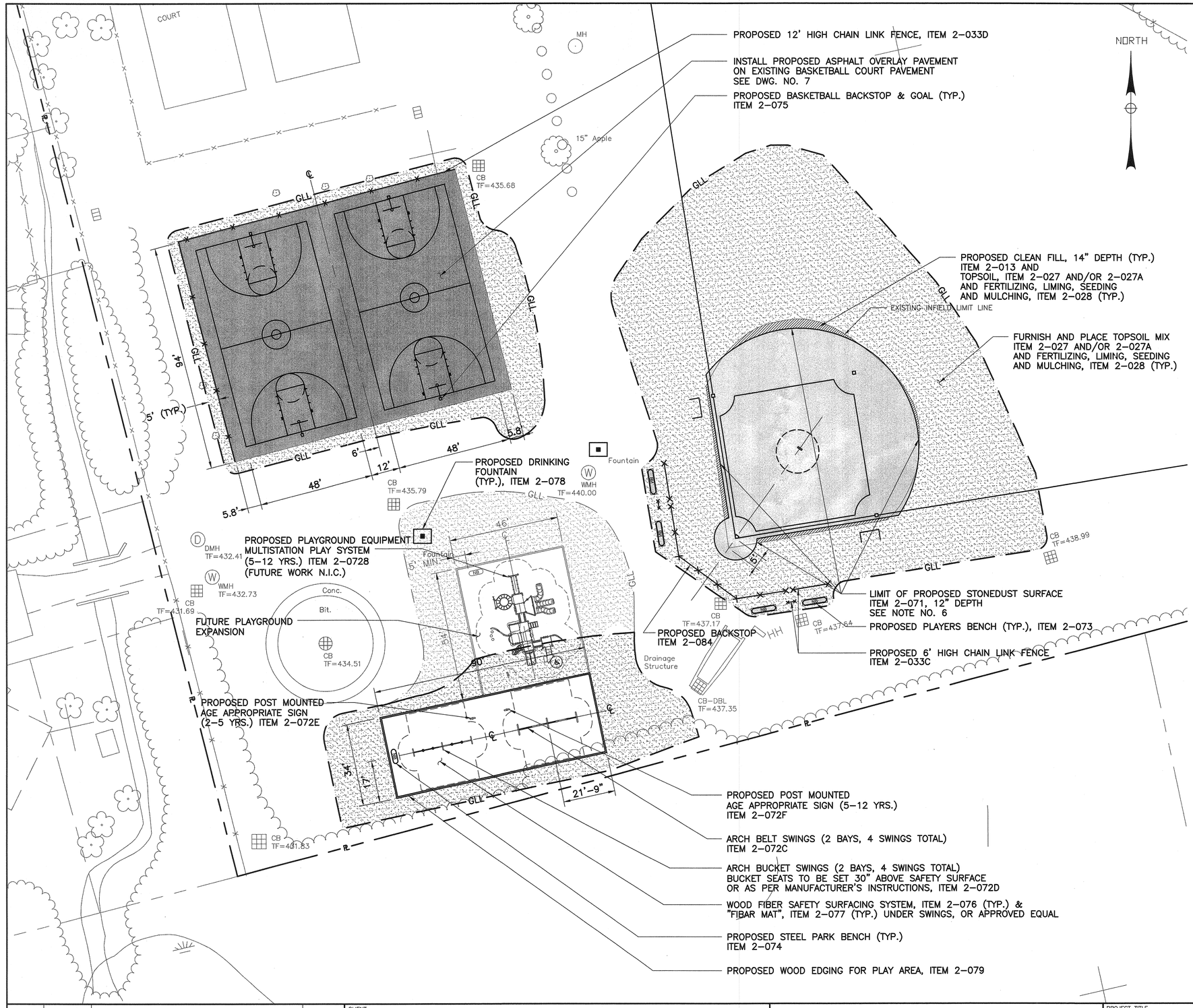

LAYOUT NOTES:

1. CONTRACTOR SHALL EXERCISE CARE WHEN PERFORMING ANY WORK ACTIVITIES ADJACENT TO SITE FEATURES TO REMAIN. CONTRACTOR SHALL BE RESPONSIBLE FOR TAKING THE APPROPRIATE MEASURES AS NECESSARY TO ENSURE AND PROVIDE A SAFE WORK AREA.
2. THE CONTRACTOR SHALL STAKE OUT LOCATIONS OF NEW BENCHES AND PLAYGROUND EQUIPMENT FOR LAYOUT APPROVAL PRIOR TO THE START OF CONSTRUCTION. ALL LAYOUTS SHOULD BE PERFORMED BY A CONNECTICUT STATE LICENSED LAND SURVEYOR.
3. EXPOSED FOOTINGS SHALL HAVE A NYLON BRUSH FINISH.
4. THE CONTRACTOR SHALL RESTORE ALL AREAS SURROUNDING THE NEW WORK DAMAGED BY THE CONTRACTOR DURING CONSTRUCTION AFTER ALL WORK IS COMPLETED TO THE SATISFACTION AND APPROVAL OF THE CITY.
5. CONTRACTOR SHALL INSTALL MIN. 12" DEPTH OF PROPOSED FIBER SAFETY SURFACING SYSTEM WITHIN PROPOSED ACTIVITY ZONES.
6. CONTRACTOR SHALL FURNISH AND INSTALL CLEAN FILL MATERIAL, ITEM 2-013, AS NECESSARY TO ESTABLISH INFIELD SUBGRADE PRIOR TO STONEDUST SURFACE INSTALLATION.
7. CONTRACTOR SHALL FURNISH AND INSTALL CLEAN FILL MATERIAL, ITEM 2-013, IF REQUIRED TO ESTABLISH FINISHED SUBGRADE ELEVATIONS AS INDICATED ON THE PLANS.

LEGEND:

- EXISTING PROPERTY LINE
- EXISTING CURB
- EXISTING FENCE
- EXISTING METAL BENCH
- 9" EXISTING TREE
- EXISTING SHRUB
- PROPOSED ASPHALT PAVEMENT FOR BASKETBALL COURT
- PROPOSED TOPSOIL & SEED LIMIT
- PROPOSED STEEL PARK BENCH
- PROPOSED BASKETBALL BACKSTOP
- GLL — PROPOSED GRADING LIMIT LINE
- PROPOSED PLAYERS BENCH
- PROPOSED DRINKING FOUNTAIN
- LIMIT OF PROPOSED WOOD FIBER SAFETY SURFACING SYSTEM (ACTIVITY ZONE)
- PROPOSED WOOD EDGING
- CENTERLINE
- PROPOSED CLEAN FILL, TOPSOIL, FERTILIZING, LIMING, SEEDING AND MULCHING
- PROPOSED STONEDUST SURFACE

TOPOGRAPHIC SURVEY PREPARED BY BSC GROUP, 180 GLASTONBURY BOULEVARD, GLASTONBURY, CT. JANUARY 2007

REV.	DATE	REMARKS	BY

CLIENT

CITY OF WATERBURY
PUBLIC WORKS DEPARTMENT
WATERBURY, CONNECTICUT

LKB
LOCKWOOD, KESSLER & BARTLETT, INC.
CONSULTING ENGINEERS SINCE 1889 SYOSSET, NEW YORK

PROJECT TITLE
PARK IMPROVEMENTS AT SLOPING ACRES PARK & CURTIN PARK

DRAWING TITLE
CURTIN PARK
LAYOUT AND MATERIALS PLAN

DESIGNED BY:	F.E.
DRAWN BY:	WST
CHECKED BY:	S.F.
DATE:	OCTOBER 2007
SCALE:	1"=20'
PROJECT NO.	6259
DRAWING NO.	5



GRADING & DRAINAGE NOTES:

1. THE CONTRACTOR SHALL VERIFY THE FINAL PROPOSED GRADES PRIOR TO CONSTRUCTION.
2. ALL PROPOSED SPOT ELEVATIONS SHALL BE ESTABLISHED BY A CONNECTICUT STATE LICENSED SURVEYOR.
3. CONTRACTOR SHALL FINE GRADE DISTURBED SUBRADE AS REQUIRED UNDER ITEM 2–008.
4. CONTRACTOR SHALL GRADE SITE TO MEET PROPOSED GRADES AND/OR DISPOSE OF SURPLUS MATERIAL AS SPECIFIED UNDER ITEM 2–003.
5. CONTRACTOR SHALL FINISH AND PLACE CLEAN FILL AS REQUIRED TO MEET PROPOSED GRADES WHEN NECESSARY, AS SPECIFIED UNDER ITEM 2–013.

LEGEND:

- EXISTING PROPERTY LINE
- EXISTING FENCE
- PROPOSED FENCE
- EXISTING SHRUB
- EXISTING TREE
- EXISTING CONTOUR
- PROPOSED GRADING LIMIT LINE
- PROPOSED CONTOUR
- EXISTING SPOT GRADE
- PROPOSED SPOT GRADE
- PROPOSED STEEL PARK BENCH
- PROPOSED PLAYERS BENCH
- PROPOSED DRINKING FOUNTAIN
- PROPOSED AGE APPROPRIATE SIGN
- PROPOSED BASKETBALL BACKSTOP
- PROPOSED SWALE

TOPOGRAPHIC SURVEY PREPARED BY BSC GROUP, 180 GLASTONBURY BOULEVARD, GLASTONBURY, CT. JANUARY 2007

REV.	DATE	REMARKS	BY

CLIENT

CITY OF WATERBURY
PUBLIC WORKS DEPARTMENT
WATERBURY, CONNECTICUT

LKB
LOCKWOOD, KESSLER & BARTLETT, INC.
CONSULTING ENGINEERS SINCE 1889 SYOSSET, NEW YORK

PROJECT TITLE
PARK IMPROVEMENTS AT SLOPING ACRES PARK & CURTIN PARK

DRAWING TITLE
CURTIN PARK
GRADING AND DRAINAGE PLAN

DESIGNED BY:	F.E.
DRAWN BY:	WST
CHECKED BY:	S.F.
DATE:	OCTOBER 2007
SCALE:	1"=20'
PROJECT NO.	6259
DRAWING NO.	6

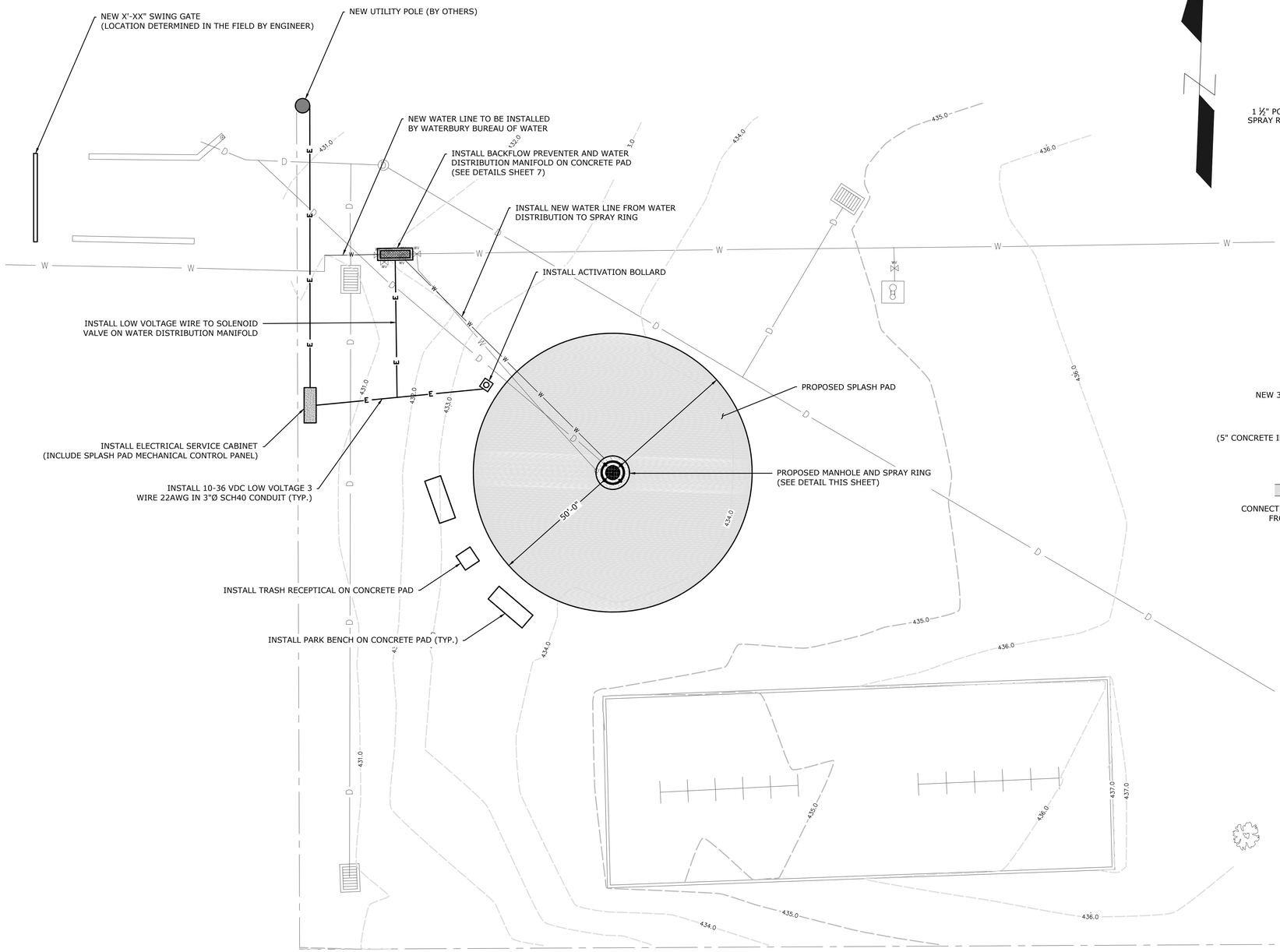

CURTIN PARK PROPOSED PLANS
SCALE : 1" = 10'-0"

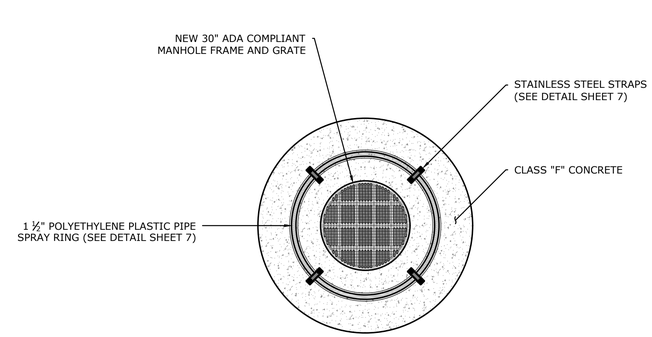

MANHOLE, SPRAY RING AND DRAIN

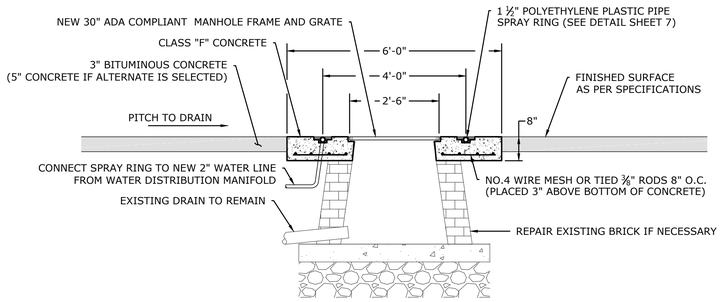

SPRAY PAD CENTER CROSS SECTION

CURTIN PARK PROPOSED DETAILS
NOT TO SCALE

PROPOSED SITE PLAN

CURTIN PARK
SPLASH PAD
84 SPRING BROOK ROAD

Bureau of Engineering
City of Waterbury, CT.

DESIGNED BY: TC	DATE: FEBRUARY 2018	Sheet No. **2**
DRAWN BY: MC/VT	SCALE: SCALE AS NOTED	
CHECKED BY: TC	ISSUED FOR: CONSTRUCTION	
APPROVED BY: TC	CADD FILE: P081 CURTIN PARK SPLAH PAD	

C:\Users\mcaffrey\appdata\local\temp\AcPublish_64916\2018 CDBG Park Splash Pads.dwg
Plotted: Mar 22, 2018 – 8:27 am

Attachment J

Figure 6-4: Parks, Recreation, and Open Space

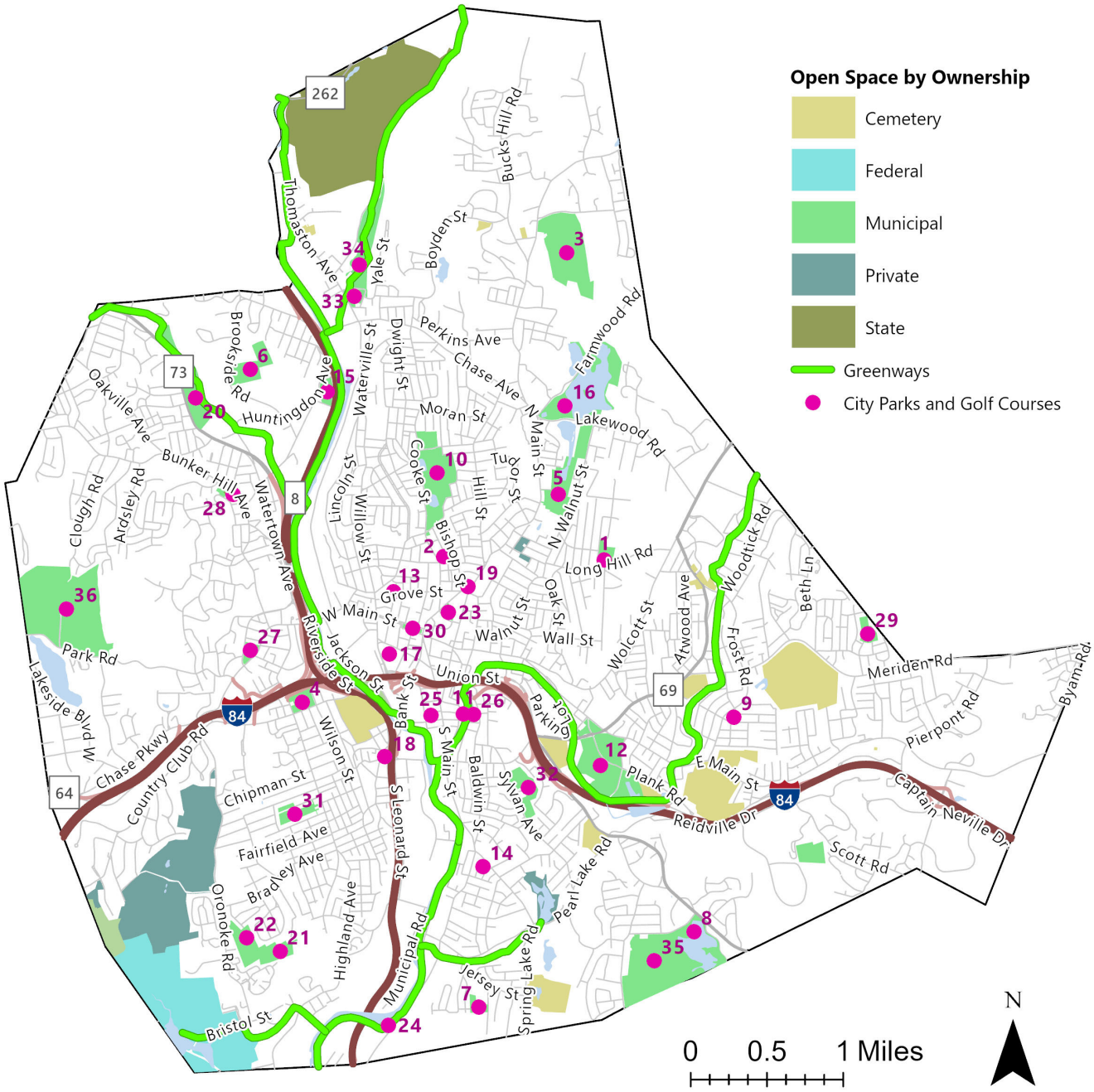

Map Key	Name	Map Key	Name	Map Key	Name
1	Berkeley Park	13	Hayden Park	25	Rivera-Hughes Park
2	Bonner Park	14	Hopeville Park	26	River-Baldwin Rec Center
3	Bucks Hill Park	15	Huntingdon Park	27	Rowland Park
4	Chase Park	16	Lakewood Park	28	Schofield Park
5	City Mills Park	17	Library Park	29	Sloping Acres Park
6	Coe Park	18	Lt. Riddick Park	30	The Green
7	Curtin Park	19	MLK Park	31	Town Plot Park
8	East Mountain Park	20	Municipal Stadium	32	Washington Park
9	Fairlawn Park	21	Murray Park (Lower)	33	Waterville Park
10	Fulton Park	22	Murray Park (Upper)	34	Waterville Park (Back Fields)
11	George S. Tirado Sr. Park	23	North End Rec. Center	35	East Mountain Golf Course
12	Hamilton Park	24	Platt Park	36	Western Hills Golf Course

Attachment K

Waterbury

Unique ID: 054903410053 **Card No:** 1 Of 1

Location:	84 SPRING BROOK RD	Map Id:	0549-0341-0053	Zone:	RL	Date Printed:	7/31/2026
		Neighborhood:	22300-Hopeville			Last Update:	7/30/2026

Owner Of Record	Volume/Page	Date	Sales Type	Valid	Sale Price
CITY OF WATERBURY	1082/ 254				
			Exempt		

Prior Owner History

Permit Number	Date	Permit Description
2018.2698	9/25/2018	INSTALL NEW 100A UNDERGROUND SERVICE & BONDING OF EXISTING SPLASH PAD - REMODELED ONE NOZZLE ONE BAL

Supplemental Data

Census/Tract	
Dev Map ID	
GIS ID	
Route	
District	
Utilities	

Appraised Value

Total Land Value	134,000
Total Building Value	0
Total Outbldg Value	54,600
Total Market Value	188,600

Acres

Land Type	Acres	490	Total Value
Rear	6.76	0.00	109,500
HouseLot	0.14	0.00	24,500
Total	6.9000	0.00	134,000

State Item Codes

Code	Quantity	Value
12-Res Excess	6.76	76.650
14-Res Outbuilding	6.00	38,220
11-Res Land	0.14	17.150

Assessment History (Prior Years as of Oct 1)

	2026	2025	2024	2023	2022
Land	93,800	93,800	93,800	93,800	93,800
Building	0	0	0	0	0
Outbuilding	38,220	38,220	38,220	38,220	38,220
Total	132,020	132,020	132,020	132,020	132,020

490 Appraised Totals

Type	Acres	Value	Type	Acres	Value
			Totals	0.00	0

Application Date: Expiration Date:

Comments

Information may be deemed reliable, but not guaranteed.

Revaluation Date: 10/1/2022

Unique ID: 054903410053 Waterbury **Card No:** 1 Of 1

Location:	84 SPRING BROOK RD
Map Id:	0549-0341-0053

General Description

Building Use
Units
Overall Condition
Class
Stories
Design (Style)
Construction
Year Built
Percent Complete

Finished Area

Foundation

Basement Area
Finished Basement
Garage Bays
Outside Entry
Sump Pump

HVAC

Heating Type
Fuel
Cooling Type

Interior

Floors
Attic Access
Walls
Bath Cond
Kitchen Cond

Exterior

Exterior

Roof Cover
Roof Type

Special Features

Type	Count/Area

Room Summary

Total	Bedroom	Kitchens	Full Baths	Half Baths

Description	Area/Qty

Attached Components

Type	Year	Area

Total Building Value:

Detached Component Computations

Type	Year	Condition	Area/Qty
Chain Link Fencing	1974	Average	2440
Chain Link Fencing	1974	Average	420
Chain Link Fencing	1974	Average	40
Chain Link Fencing	1974	Average	40
Low QualityPatio	1974	Average	11000
Tennis Courts	1974	Average	12000

Type	Year	Condition	Area/Qty

WARRANTEE DEED No. 116 Cleaveland Legal Blank Service, Inc. Hartford, Connecticut

To all People to whom these Presents shall come, Greeting:

KNOW YE, THAT it, THE HARTFORD ROMAN CATHOLIC DIOCESAN CORPORATION, a Connecticut non-stock corporation of Hartford, Connecticut

for the consideration of FIFTY SEVEN THOUSAND THREE HUNDRED TWENTY-SIX DOLLARS AND 30/100 ($57,326.30)

received to its full satisfaction of THE CITY OF WATERBURY, a Connecticut municipal corporation

do give, grant, bargain, sell and confirm unto the said The City of Waterbury all that certain piece or parcel of land, with all the improvements thereon, situated in the Hopeville District, so-called, in the said Town of Waterbury, bounded and described as follows:

Beginning at the Southeast corner of land formerly of Edward Larrow, at a point forty (40) feet south from said corner; thence running West in a line parallel with, and forty (40) feet distant therefrom, said Larrows South Line one hundred and ninety-six and one-half (196-1/2) feet, more or less; thence North forty (40) feet, more or less; thence West two hundred and twenty-three (223) feet, more or less; thence North two hundred and twenty-seven (227) feet, more or less; thence West two hundred and twenty-three (223) feet, more or less; thence South five hundred and ninety-four (594) feet, more or less; thence East six hundred and sixty-one (661) feet, more or less; thence North two hundred and twenty-seven (227) feet, more or less, to place of beginning, bounded:

Northerly -	on land now or formerly of Est. Willard S. Hill (a proposed passway);
Easterly -	on Spring Brook Road;
Southerly -	on land now or formerly of Orton P. Camp;
Westerly -	on land now or formerly of Fabiani and Pesce, and on Eugene Drive, so-called; again
Northerly -	on land now or formerly of Salvatore James Melchiore, and on land now or formerly of Pasquale Iannone; again
Easterly -	on land now or formerly of Pasquale Iannone, and on land now or formerly of Carmela P. Amico; again
Northerly -	on land now or formerly of Carmela P. Amico; again
Easterly -	on land now or formerly of Est. Willard S. Hill (a proposed passway),

being the same premises conveyed to the grantor by Warranty Deed of Concettina Garofalo dated July 13, 1961 and recorded in the office of the Town Clerk of Waterbury in Vol. 813 at Page 64.

Said premises are conveyed subject to building, building line and zoning restrictions as of record appear.

To Have and to Hold the above granted and bargained premises, with the appurtenances thereof, unto it the said grantee its ~~heirs,~~ successors, and assigns forever, to it and their own proper use and behoof. And also, it the said grantor does for it ~~self~~, its ~~heirs,~~ executors, administrators, and successors, covenant with the said grantee, its ~~heirs,~~ successors, and assigns, that at and until the ensealing of these presents, it is well seized of the premises, as a good indefeasible estate in *Fee Simple;* and has good right to bargain and sell the same in manner and ~~form~~ as is above written and that the same is free from all incumbrances whatsoever, except as hereinbefore mentioned.

And Furthermore, it the said grantor does by these presents bind it self and its ~~heirs~~ successors forever to *Warrant and Defend* the above granted and bargained premises to it the said grantee, its ~~heirs,~~ successors, and assigns, against all claims and demands whatsoever, except as hereinbefore mentioned.

In Witness Whereof, The Hartford Roman Catholic Diocesan Corporation has caused this instrument to be executed in its name and its corporate seal affixed hereto

~~In xxxx

Attachment N

MICHAEL J. DALTON
CITY CLERK

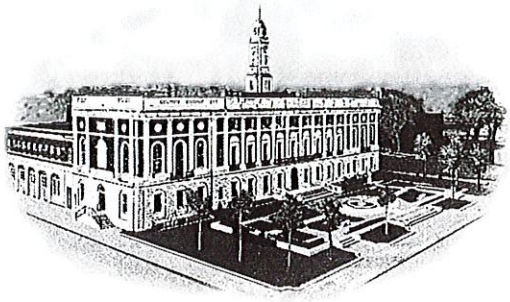

Office: (203) 574-6744
Fax: (203) 574-6745
E-mail: mdalton@waterburyct.org

OFFICE OF CITY CLERK
THE CITY OF WATERBURY
CONNECTICUT

October 7, 2026

Dr. James Nardozzi
83 Bank Street, 3rd Floor
Waterbury, CT 06702

RE: Letter of Support – Curtin Park Grant Application

Dear Dr. Nardozzi:

At its regular meeting held on Tuesday, October 6, 2026, the Board of Park Commissioners voted unanimously to express its support for the submission of a grant application for the proposed renovation and improvement of Curtin Park.

The Board recognizes the importance of maintaining and enhancing the City's parks and recreational facilities and believes that the proposed improvements to Curtin Park will provide meaningful benefits to the community and enhance the park for residents and visitors.

Accordingly, the Board of Park Commissioners is pleased to provide its full support for the grant application and the proposed renovation and improvement of Curtin Park.

Sincerely,

THE CITY OF WATERBURY

ATTEST: _____
Michael J. Dalton
City Clerk

MJD: dd

Item #1

ROBERT J. NERNEY, AICP
CITY PLANNER

One Jefferson Square Building
185 South Main Street • 5th Floor
Waterbury, CT 06706
Office: (203) 574-6817
Fax: (203) 346-3949
Email: rnerney@waterburyct.org

PAUL K. PERNEREWSKI, JR.
MAYOR

CITY PLANNING DEPARTMENT
THE CITY OF WATERBURY
CONNECTICUT

Dr. Cameron Clegg
Environmental Analyst 2/UGCG Lead
Land Acquisition and Management
Office of the Commissioner
CT Department of Energy and Environmental Protection
79 Elm Street
Hartford, CT 06106

October 1, 2026

Dear Dr. Clegg,

This letter is written in support of the City of Waterbury's initiative to secure an Urban Green and Community Garden (UGCG) grant through the Connecticut Department of Energy and Environmental Protection. If approved, the grant will be used to renovate Curtin Park; a recreation area that serves the City's Gilmartin neighborhood. Curtin Park is located in a residential neighborhood at 84 Springbrook Road, just 0.3 miles from a Waterbury Housing Authority 56-unit housing complex also located on 167 Springbrook Road.

Anticipated improvements include the removal of overgrown vegetation, installation of walkways, benches, and trash receptables. The tennis courts currently have trees growing through the asphalt surfaces, the basketball courts need to be resurfaced, the baseball field needs to be renovated, as well as, the playground area. The tennis courts would be removed and replaced with a grass field. The swings and surfacing at the playground will be replaced. In addition, there is currently a growing interest in soccer and therefore we will be incorporating soccer goals at the baseball field.

Waterbury's Plan of Conservation and Development (POCD) strongly supports projects of this nature. As a long-range planning tool, the POCD emphasizes the importance of maintaining and rehabilitating parks and open space (refer to POCD attachment, page 53). The rehabilitation and maintenance of existing parks, parklets, playgrounds, golf courses and recreation centers are identified as an immediate need in terms of priority implementation (refer to POCD attachment, page 53).

The City of Waterbury appreciates your consideration of this request. Please do not hesitate to contact me should you have any questions or would additional information.

Respectfully,

Robert J. Nerney, AICP
City Planner

cc. Zach Keith, Urban Historian, Economic Development & Grant Manager, WDC
Brenda Richard, Administrative Assistant, WDC

PAUL K. PERNEREWSKI, JR.
MAYOR

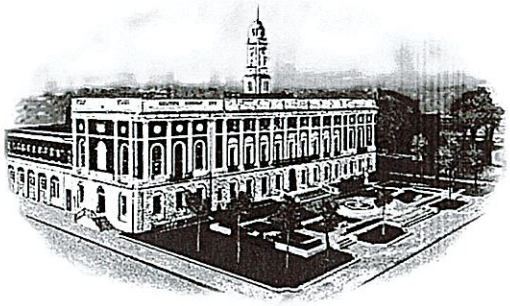

OFFICE OF THE MAYOR
THE CITY OF WATERBURY
CONNECTICUT

Dr. Cameron Clegg
Environmental Analyst 2/UGCG Lead
Land Acquisition and Management
Office of the Commissioner
CT Department of Energy and Environmental Protection
79 Elm Street
Hartford, CT 06106

October 8, 2026

Dear Dr. Clegg,

I am writing to you as Mayor of the City of Waterbury in support of the city's Urban Green and Community Garden Grant Application for the **Curtin Park Renovation Project.**

The City of Waterbury purchased the property in 1973 and subsequently constructed the park in 1974, naming it in honor of long time Parks Department Superintendent James Curtin. The park was originally designed with a baseball field that could be flooded for skating, basketball courts, tennis courts, and a playground.

The park, however, is in great need for improvements.

Curtin Park, is located in a residential neighborhood on Springbrook Road, just 0.3 miles from a Waterbury Housing Authority multi-family housing complex also located on Springbrook Road. The park's southern boundary is at the edge of the new 3.2 million square foot Amazon distribution center scheduled for completion summer 2027 and projected to employ 1,000 workers. Lastly, the park is a half-mile walk from one of Waterbury's newer public schools: the K-8 John G. Gilmartin School built in 2010.

The Park is located within census tract 3515. Waterbury's median household income is $51,886, which is far below the State of Connecticut's at $99,900.

The Park has overgrown trees and vegetation throughout which does not provide a welcoming entrance. The park's most recent improvement was a splash pad in constructed in 2018. The balance of the park has not seen investment in many years. The tennis courts currently have trees growing through the asphalt surfaces, the basketball courts need to be resurfaced, the baseball field needs to be renovated, as well as, the playground area.

Through pruning and removal of overgrown vegetation the park will become more welcoming and provide an additional amenity with the addition of a walking path around the park. The tennis courts would be removed and replaced with a grass field. The swings and surfacing at the playground will be replaced.

In addition, there is currently a growing interest in soccer and therefore we will be incorporating soccer goals at the baseball field. The limited lighting and park signage at both entrances to the park will be replaced. Trash cans and benches will also be added back to the park as currently there are none.

By investing in a renovation to this park which is within walking distance to the school and a troubled neighborhood this will help rejuvenate the neighborhood. With the lights not in working order and the overgrown vegetation making for a current safety hazard.

I overwhelmingly support the city's UGCG Application and look forward to seeing this project come to life.

Sincerely,

Paul K. Pernerewski, Jr.
Mayor, City of Waterbury

Attachment O&P

Dr. Cameron Clegg
Environmental Analyst 2/UGCG Lead
Land Acquisition and Management
Office of the Commissioner
CT Department of Energy and Environmental Protection
79 Elm Street
Hartford, CT 06106

September 30, 2026

Dear Dr. Clegg,

I am writing to you as President of the Gilmartin Community Club in support of the City's Urban Green and Community Garden Grant Application for the Curtin Park Renovation Project.

Curtin Park has been a part of this neighborhood since being constructed the park in 1974, naming it in honor of long time Parks Department Superintendent James Curtin. The park was originally designed with a baseball field that could be flooded for skating, basketball courts, tennis courts, and a playground.

The park, however, is in great need for improvement.

Curtin Park, 84 Springbrook Road, is located in the Gilmartin neighborhood section of Waterbury, just 0.3 miles from the Waterbury Housing Authority 56-unit housing complex also located on 167 Springbrook Road. The park's southern boundary is at the edge of the new 3.2 million square foot Amazon distribution center scheduled for completion summer 2027 and projected to employ 1,000 workers. Lastly, the park is a half mile walk from one of Waterbury's newer public schools: the K-8 John G. Gilmartin School built in 2010.

The Park is located within census tract 3515. Waterbury's median household income is $51,886, which is far below the State of Connecticut's at $99,900.

The Park has overgrown trees and vegetation throughout which does not provide a welcoming entrance. The park's most recent improvement was a splash pad in constructed in 2018. The balance of the park has not seen investment in many years. The tennis courts currently have trees growing through the asphalt surfaces, the basketball courts need to be resurfaced, the baseball field needs to be renovated, as well as the playground area. There is also currently no soccer field which the neighbors would greatly support.

By investing in a renovation to this park which is within walking distance to the school and our Gilmartin neighborhood this will help improve the quality of life for the residents with an improved park in walking distance from their house. The Gilmartin community is in favor of rehabbing Curtin Park and supports the proposed improvements.

I overwhelmingly support the City's UGCG Application and look forward to seeing this project come to life.
Sincerely,

Gary M Giusto

Gary M Giusto

President Gilmartin Community Club

HOUSING AUTHORITY
OF THE CITY OF WATERBURY

2 Lakewood Road Waterbury, CT 06704 Phone: 203-596-2640

CHRISTIAN D'ORSO
Executive Director

VINCENT SICA
Deputy Director

BOARD OF COMMISSIONERS
Nicholas Tetreault, Chairman
Dr. Robert Porzio, Vice Chairman
Joseph Thomas, Treasurer
Tahra Sanchez, Commissioner
Alice Trotman, Resident Commissioner

September 30, 2026

Dr. Cameron Clegg
Environmental Analyst 2/UGCG Lead
Land Acquisition and Management
Office of the Commissioner
CT Department of Energy and Environmental Protection
79 Elm Street
Hartford, CT 06106

Dear Dr. Clegg,

I am writing to you as the Executive Director of the Waterbury Housing Authority. It has come to my attention that the City of Waterbury via the Waterbury Development Corporation is applying for DEEP's Urban Green and Community Garden Grant for the renovation of Curtin Park.

Curtin Park is located at 84 Springbrook Road, less than half a mile from our Springbrook Apartments, an active and vibrant development in our HUD Low Income Public Housing Program portfolio. Springbrook is home to 56 local families, including more than 110 children.

The park is located within census tract 3515. And while Waterbury's median household income is $51,886 (far below the State of Connecticut's $99,900), some of its most economically disadvantaged residents live in our Springbrook Apartments.

The park needs significant improvements. Overgrown trees and vegetation create an unwelcoming entrance. Its most recent improvement was a splash pad constructed in 2018, however the balance of the park has not seen investment in many years. The tennis courts currently have trees growing through the asphalt surfaces, the basketball courts need to be resurfaced, the baseball field needs to be renovated, as does the playground area. The park also lacks a soccer field.

Our residents have limited access to green space and recreational facilities within walking distance from their homes, and some face transportation barriers that make reaching other parks difficult. Improvements to Curtin Park would be especially meaningful to the over 110 children at Springbrook, providing a welcoming place close to home to play, stay active, and enjoy the outdoors.

In closing, I strongly support the City's UGCG Application. Investing in Curtin Park would directly benefit our families and the surrounding neighborhood, and I look forward to seeing this project become a reality.

Sincerely,

Christian D'Orso
Executive Director

NAUGATUCK VALLEY
COUNCIL of GOVERNMENTS
21 West Main Street, 6th Floor, Waterbury, CT 06702 · 203.757.0535 · nvcogct.gov

October 5, 2026

Dr. Cameron Clegg
Environmental Analyst 2 / UGCG Lead
Land Acquisition and Management
Office of the Commissioner
Connecticut Department of Energy and Environmental Protection
79 Elm Street
Hartford, CT 06106

Dear Dr. Clegg:

I am writing on behalf of the Naugatuck Valley Council of Governments (NVCOG) in strong support of the City of Waterbury, through the Waterbury Development Corporation, and its application to the Connecticut Department of Energy and Environmental Protection's Urban Green and Community Garden Grant Program for the renovation of Curtin Park.

Curtin Park, located at 84 Springbrook Road, is less than half a mile from the Waterbury Housing Authority's Springbrook Apartments, an active development within the City's HUD Low-Income Public Housing portfolio. Springbrook is home to 56 local families, including more than 110 children.

The park is located within Census Tract 3515 and serves an area of significant economic need. Waterbury's median household income of $51,886 is well below Connecticut's statewide median of $99,900, and many of the residents in the Springbrook neighborhood face additional economic and transportation barriers. NVCOG is also currently updating the Regional Plan of Conservation and Development, which recognizes the importance of improving and expanding access to parks, open space, and recreational opportunities throughout the region.

Curtin Park is in need of significant investment. Overgrown trees and vegetation create an unwelcoming entrance, and although a splash pad was constructed in 2018, much of the remainder of the park has not seen substantial improvements in many years. The tennis courts have deteriorated to the point that vegetation is growing through the asphalt surface; the basketball courts require resurfacing; and the baseball field and playground area are also in need of renovation. The park currently lacks a soccer field as well.

For residents of Springbrook Apartments and the surrounding neighborhood, access to quality green space and recreational facilities within walking distance is particularly important. Transportation barriers can make it difficult for some families to reach other parks and recreational amenities. Improvements to Curtin Park would be especially meaningful to the more than 110 children living at Springbrook, providing a safe, welcoming, and accessible place close to home where they can play, stay active, and enjoy the outdoors.

For these reasons, NVCOG strongly supports the City of Waterbury's Urban Green and Community Garden Grant application. Investment in Curtin Park would provide meaningful

benefits to Springbrook families, the surrounding neighborhood, and the City as a whole while advancing broader regional goals related to equitable access to parks and open space.

We appreciate your consideration of this important project and look forward to seeing Curtin Park become a stronger community asset for Waterbury residents.

Respectfully,



Rick Dunne
Executive Director
Naugatuck Valley Council of Governments

Attachment Q

MASTER MUNICIPAL AGREEMENT

BETWEEN

CITY OF WATERBURY

AND

WATERBURY DEVELOPMENT CORPORATION

Dated: February 12th, 2014

TABLE OF CONTENTS

Page #

1. DEFINITIONS

1.1 Administrator, Administration, Administrating 3, 4
1.2 Designated Program..... 4
1.3 Project or Program Authorization Letter (PAL)..... 4

2. DESIGNATION OF PROGRAM ADMINISTRATOR AND PROJECT MANAGER

2.1 Designations..... 4
2.2 Prior Designations..... 4
2.3 PAL Approval..... 4, 5
2.4 Revisions PAL..... 5
2.5 Content of PAL..... 5

3. CONDUCT

3.1 WDC Performance..... 5
3.2 Services..... 5
3.3 City Responsibility..... 6
3.4 Assignability..... 6
3.5 Draw-Downs..... 6

4. SUBCONTRACTS

4.1 Monitoring..... 6
4.2 Content..... 6

5. PROCUREMENT STANDARDS AND SELECTION PROCESS:

5.1 Standards and Selection Process..... 7

6. COMPENSATION

6.1 Full and Complete Payment..... 7
6.2 Fee Schedule..... 7
6.3 Limitation of Payment..... 8
6.4 Record keeping..... 8
6.5 Reimbursement..... 8
6.6 Proposal Costs..... 8
6.7 Payment for Services..... 8
6.8 Liens..... 8
6.9 Review of Work..... 9

7. HOLD HARMLESS

7.1 WDC Indemnify..... 9

7.2 Claims..... 9
7.3 Insurance..... 10

8. INSURANCE

8.1 Insurance obtained and approved 10
8.2 Insurance Requirements.....10
8.3 Policies.....10
8.4 Failure to Maintain Insurance..... 11
8.5 Certificates of Insurance..... 11
8.6 Replacement/Renewal Certificates..... 11
8.7 Proof of Insurance.....11

9. CONFORMANCE WITH FEDERAL, STATE AND OTHER JURISDICTIONAL REQUIREMENTS

9.1 Permits, Laws, Taxes and Regulations..... 12
9.2 Taxes-Federal, State and Local.....12
9.3 Labor and Wages..... 12
9.4 Minimum Wage..... 12

10. DISCRIMINATORY PRACTICES

10.1 Discrimination – Labor Matters.....13
10.2 Equal Opportunity.....13

11. CONFORMANCE WITH CITY ORDINANCE, HIRING OF WATERBURY RESIDENTS

11.1 Ordinance on Hiring Waterbury Residents.....13
11.2 Failure to Comply with Good Jobs Ordinance..... 13

12. HUD SECTION 3

12.1 Work Subject to HUD Section 3 Clause.....14
12.2 Agree to comply with Section 3 Clause.....14
12.3 Post Section 3 Notice.....14
12.4 Agreement to Include Section 3 Clause.....14
12.5 Vacant Positions.....14
12.6 Noncompliance with HUD regulations.....14
12.7 Indian Housing Assistance.....15

13. TERMINATION

13.1 Termination of Agreement for Cause..... 15
13.2 Termination for Convenience of the City..... 15
13.3 Termination of Non-Appropriation or Lack of Funding.....15

14. RIGHTS UPON CANCELLATION OF TERMINATION

14.1 Termination for Cause..... 16
14.2 Termination for Lack of Funding or Convenience..... 16
14.3 Termination by the WDC..... 17
14.4 Assumption of Subcontracts..... 17
14.5 Delivery of Documents.....17
14.6 Ownership of Instruments of Professional Services..... 17

15. FORCE MAJEURE..... 17

16. SUBCONTRACTING

16.1 Approval to Subcontract..... 18
16.2 Responsibility..... 18

17. AUDIT..... 18

18. RISK OF DAMAGE AND LOSS.....18

19. ENTIRE AGREEMENT..... 19

20. INDEPENDENT CONTRACTOR RELATIONSHIP.....19

21. SEVERABILITY..... 19

22. SURVIVAL..... 20

23. CONFLICTS OR DISPUTES..... 20

24. DISPUTES; LEGAL PROCEEDINGS.....20

25. BINDING AGREEMENT..... 20

26. WAIVER.....20

27. GOVERNING LAWS..... 21

28. NOTICE.....21

29. ACKNOWLEDGEMENTS, NOTICES AND REPRESENTATIONS

29.1 Material Breach – Employee 21
29.2 Material Breach – Violation of the City's Code of Ordinance..... 21
29.3 Material Breach – Gratuity..... 22
29.4 Recovery of Payment..... 22
29.5 Kickback..... 22
29.6 Solicitation..... 22
29.7 Required Documents..... 22
29.8 Interest of City Officials..... 23
29.9 Prohibition Against Contingency Fees..... 23
29.10 Freedom of Information Act Notice..... 23

30. CITY AND WDC DESIGNEES:

30.1 City Designee..... 23
30.2 WDC Designee..... 23

ADDENDUMS

ADDENDUM A - CDBG Program Statement of Work; Specific CDBG Certifications
ADDENDUM B - HOME Program Statement of Work; Specific HOME Certifications
ADDENDUM C - Emergency Solutions Grant Statement of Work; ESG Certifications
ADDENDUM D - Project Management Scope of Services

EXHIBITS

EXHIBIT A - City Ordinances
§31.269 – WDC Designation of Authority
§38.020-38.071 – Solicitation and Award Methods of Source Selection
§34.15-34.22 – Hiring of Waterbury Residents on Certain Publicly-Funded Construction Projects, and as further amended from time to time.
EXHIBIT B - U.S. Department of Housing and Urban Development
SF 424 – Certifications
EXHIBIT C - CFR Procurement Requirements
24 C.F.R. §84.40 – 84.48
EXHIBIT D - List of Current WDC Projects

MASTER MUNICIPAL AGREEMENT
BY AND BETWEEN
THE CITY OF WATERBURY
AND
THE WATERBURY DEVELOPMENT CORPORATION

THIS MASTER AGREEMENT, for Project/Program Management Services ("Master Agreement") is entered into by and between the **CITY OF WATERBURY**, a municipal corporation organized and existing under the laws of the State of Connecticut, located at 235 Grand Street, Waterbury, Connecticut, (the "City"), and **THE WATERBURY DEVELOPMENT CORPORATION** ("WDC"), a federally-recognized 501(c)(3) not-for-profit, duly registered domestic corporation, located at 83 Bank Street, 3rd Floor, Waterbury, Connecticut, (the "WDC").

WHEREAS, the City undertakes, and may financially participate in municipal economic development projects;

WHEREAS, the City is the Grantee of certain grant program funds pursuant to certain State and/or Federal Government Funding Approval/Agreements by and between the City and such State and Federal Government agencies;

WHEREAS, the City, as a Grantee has undertaken certain responsibilities and obligations pursuant to the Funding Approvals/Agreements to administer the grants and programs;

WHEREAS, by City Ordinance, currently codified at §31.269, a copy of which is attached hereto as Exhibit A, has designated the WDC, to be, among other designations, the City's Economic Development Agency, Housing Site Development Agency and Community Development Agency;

WHEREAS, by City Ordinance, currently codified at §31.269(C) the WDC, when duly designated, is authorized to act on behalf of the City in the capacity of general contractor, project manager, construction manager, design builder, owner's representative and/or in such other similar development or construction capacity or capacities, without the requirement or necessity of a bid;

WHEREAS, the City is the Grantee of the Community Development Block Grant ("CDBG"), the Emergency Solutions Grant "(ESG") and the Home Investments Partnership Program ("HOME") pursuant to certain Funding Approvals/Agreements by and between the City and the United States Department of Housing and Urban Development ("HUD");

WHEREAS, the City, as Applicant and Grantee, has undertaken certain responsibilities and obligations to HUD pursuant to such Funding Approval/Agreements to administer such grants and programs and through WDC, as a consequence of such responsibilities and obligations has made certain certifications to HUD for the current year and in a similar manner in previous funding years, as set forth in a form attached hereto as Exhibit B;

WHEREAS, the City, is further desirous of having the WDC assume and to continue certain responsibilities and obligation to administer the grants and programs on a project-by-project basis;

WHEREAS, the City, is desirous of having the WDC assume and to continue the responsibilities for certain economic development projects, on a project-by-project basis;

WHEREAS, the WDC is agreeable to the assumption and continuance of such responsibilities and obligations to administer such grants and programs and oversee and manage such projects on behalf of the City;

WHEREAS, the City, has previously designated the WDC as the administrator of grants and programs, including but not limited to, administrator of the Community Development Block Grant ("CDBG"), the Emergency Solutions Grant ("ESG"), and the Home Investments Partnership Program ("HOME") (as said programs have been or may be renamed or amended from time to time) as well as the operation and management of various programs and projects, including but not limited to the Senior Shuttle Program, under a Revised Agreement between the City and WDC, dated April 21, 2008; and

WHEREAS, the City has previously duly designated the WDC as the Project Manager for certain Economic and Development projects and so approved by the Board of Alderman, as listed on Exhibit A and will continue its obligations under such designations pursuant to the terms of this Agreement.

NOW, THEREFORE, IN CONSIDERATION OF THE MUTUAL PROMISES HERE, THE CITY AND WDC HEREBY AGREE AS FOLLOWS:

1. DEFINITIONS:

1.1 "Administrator", "Administration", "Administrating" of a program or project shall mean conducting, managing, and administration of any and all aspects of operations required to perform and complete the designated program or project by either the City or the WDC, as applicable to the particular designated program or project, in whole or part, including but not limited to, advertising and awarding any contract(s) for performance of work by contractor(s) in whole or part, or any combination thereof, and undertaking all the administrative duties related to and required for the completion of the designated program or project, and shall be conducted in such manner or satisfactory to the City and consistent with any and all relevant Federal, State and City standards

required by the funding source(s) and/or as may be a condition of the program/project funds.

1.2 "Designated Program" or "Designated Project" shall mean any program or project that the City has undertaken or participates for which the WDC has been duly designated to Administer on behalf of the City and for which the WDC is authorized to act on behalf of the City in conformance with City Ordinances as set forth in this Agreement, Charter and applicable State and Federal Law and Regulations.

1.3 Project or Program Authorization Letter ("PAL") shall mean the written documentation that authorizes and delineates the Designated Project or Designated Program and authorizing funding source to the WDC.

2. DESIGNATION OF PROGRAM ADMINISTRATOR AND PROJECT MANAGER:

2.1 Authority to Designate: The City, through the Mayor, shall designate WDC as Program Administrator or Project Manager on a program or project basis, in writing pursuant to City of Waterbury Code of Ordinances as set forth in this Agreement and/or applicable City of Waterbury Charter provisions.

2.2 Prior Program Designations:

A. The City has, by written agreement, revision dated April 21, 2008, designated the WDC as the Program Administrator of all aspects of the CDBG Program, the HOME Program and the ESG Program, pursuant to and in accordance with the specific program requirements as set forth in the April 21, 2008 Agreement, at Addendum "A" (CDBG); Addendum "B" (HOME), and Addendum "C" (ESG) respectively. Said Addendum A, B, and C are attached hereto and incorporated by reference to this Agreement. This Agreement shall supersede all prior Agreements for the covered programs identified herein at Paragraph 2.2 as said programs have been or may be renamed or amended from time to time.

B. Pursuant to said prior Program Administrator designation referenced in Paragraph 2.2 herein, the WDC was designated as Program Administrator for the Senior Shuttle Program. Said designation shall continue and this Agreement shall supersede all prior agreements.

C. The City hereby ratifies and authorizes all previous programs and/or projects assigned to WDC by the City.

2.3 PAL Approval: The City shall issue to the WDC a Program and/or Project Authorization Letter ("PAL"), which will be addressed to the Chief Executive Officer of WDC and signed by the Mayor. Each PAL issued under this Agreement shall comply with City Ordinance provisions regarding the Execution of Contracts, as amended from

time to time and currently at §38.072 of City Ordinance. Inclusive of said requirements, but not limited thereto and incorporated by reference are the specific following requirements:

A. Execution by the Mayor: The Mayor, on behalf of the City shall execute each PAL.

B. Role of Corporation Counsel: The Corporation Counsel, shall approve each PAL as to form and compliance with all legal requirements, including City Charter and Ordinances.

C. Approval by the Board of Aldermen: Each PAL shall be subject to Board of Aldermen approval.

2.4 Revisions to the PAL: Any modification to the scope, the allowed funding amount, or cost breakdown of the Designated Program or Designated Project must be signed by the Mayor, and is subject to approvals and in accordance with the procedures set forth above 2.3, any revised PAL will supersede the previously issued PAL and will control unless otherwise provided.

2.5 Content of the PAL: The PAL issued by the City shall set forth, at a minimum:

A. The Funding source(s); the related funding authorization or program information; any associated funding ratio between the City and other funding sources including Federal or State Government sources, as applicable;

B. The maximum City funds or ratio;

C. City Certification of fund availability;

D. An estimated cost breakdown for the designated Project or Program, if applicable;

E. The total estimated Project/Program amount;

3. CONDUCT:

3.1 WDC to perform and complete: Upon approval of the PAL, the WDC in its own name may apply for state and federal grants and otherwise shall administer and engage in all activity associated with the Designated Program/Designated Project in accordance with the PAL and this Master Agreement.

3.2 Service: With respect to program and project management, the WDC shall, in its own name, perform the services as set forth in Addendum D herein on each

designated project or program in addition to the services set forth and further amplified in each PAL;

3.3 The City shall remain primarily responsible and liable for all grant and program funds awarded and to be expended by the WDC on behalf of the City pursuant to this Master Agreement. As such, in order to allow proper monitoring and oversight of such expenditures by the City, the WDC will set up requests for draw-downs against grant and program funds allocated to the City, using software or other draw down protocols as provided by a grant program or funding source, including but not limited to IDIS software system provided by HUD; provided, however, that final authorization to expend such funds shall only occur after review and final approval of any such draw-downs/expenditures by the City, utilizing IDIS or such other software or protocols adopted from time to time.

3.4 Assignability: The WDC shall not assign any interest in this Master Agreement, and shall not transfer any interest in the same, by assignment or novation, without the prior written approval of the City and subject to any applicable City Ordinance and Charter provisions.

3.5 Draw-Downs: Upon final approval by the City for any draw-down(s) funding will be electronically transferred directly to the City's bank account for subsequent re-transfer electronically to the WDC's bank account or shall be transferred by such other protocol that is established from time to time by a grant or other funding source. The City shall only record receipt of the funds and the transfer of those funds to WDC, but shall not record any expenses. WDC shall record receipt of such transfer from the City and the expenditures made there from.

4. SUBCONTRACTS:

4.1 Monitoring: The WDC will monitor all subcontracted services on a regular basis, to the reasonable satisfaction of the City, to assure contract compliance. Results of monitoring efforts shall be summarized in written reports and supported with documented evidence of follow-up actions taken to correct areas of noncompliance.

4.2 Content: The WDC shall insure that any subcontractor agreement entered into in the performance of this Master Agreement contains all provisions mandated by Federal, State and local law and/or regulations as set forth herein. All subcontracts shall further include any other provisions of this Master Agreement that may be applicable either explicitly or by incorporation of this Master Agreement by reference or as requested by the PAL. Despite any failure to include any provision(s) contemplated by this paragraph in the subcontract, the WDC will nonetheless be bound by any and all applicable provision contained in this Master Agreement.

5. PROCUREMENT STANDARDS AND SELECTION PROCESS:

5.1 Standards and selection process: Unless otherwise required by a funding source, to expedite and streamline the approval and execution process for any contract or subcontract pursuant to a PAL, the WDC shall undertake to insure that all contracts and subcontracts under this Master Agreement are awarded on a fair, and open competitive basis, as directed by the City Director of Purchasing, utilizing one or more of the following procedures:

A. The WDC shall procure all materials, property or services in accordance with the requirements of 24C.F.R. §84.40-84.48, establishing procedures for the procurement of supplies and other expendable property, equipment, real property, and other services with Federal Funds, attached hereto as Exhibit C; or

B. Any procurement as defined by City Ordinance §38.020 shall be made by the WDC in accordance with a process that is identical to the City's Solicitation and Award Methods of Source Selection" requirements pursuant to City Ordinance §38.020-38.071 as amended from time-to time; attached hereto as Exhibit A; or

C. As performed by and under the direction and supervision of the City's Director of Purchasing and in his sole discretion.

6. COMPENSATION:

6.1 Full and Complete Payment: Compensation provided under this Section 6 for Designated Project/Designated Program shall consist of full and complete payment for all reasonable costs assumed by the WDC in performing a PAL, including, but not limited to, salaries, fringe benefits, including vacation, and overhead; WDC fees; costs of materials and supplies; printing and reproduction; meetings, consultation and presentations; travel expenses; postage; telephone; clerical expenses, and all similar expenses. The provisions of this Section 6 do not apply to or affect funds that may be appropriated by the City to the WDC from time to time for the WDC's general purposes. No direct costs shall be reimbursed by the City other than as provided herein, except for legal fees incurred by the WDC in the defense of third party claims as a result of the City's negligence, provided that the WDC has properly discharged its services under this Agreement and, provided further, that the WDC immediately informs the City in writing of any such claims, affording the City the opportunity to determine, in its sole discretion, whether it desires to undertake the defense of any such claims.

6.2 Fee Schedule: The fee payable to the WDC under this Agreement shall be set forth on a project-by-project basis pursuant to each PAL.

6.3 Limitation of Payment: Compensation payable to the WDC is limited to those fees set forth in this Section 6 herein. Such compensation shall be paid by the City upon review and approval of the WDC's invoices for payment, submitted no more often than once a month, and review of the work, services, reimbursable costs, deliverables, etc. required in this agreement and review as may be further required by the Charter and Ordinances of the City. The WDC's invoices shall describe the work, the actual hours worked by each WDC employee, services, reimbursable costs, reports, plans, specifications, deliverables, etc. rendered and the compensation sought therefore in a form and with detail and clarity acceptable to the City.

6.4 Recording Keeping: The WDC shall document all expenses it incurs and maintain all records relating to each Designated Project or Designated Program costs, including but not limited to its payroll hours on timesheets of staff working directly on any Designated Project or Designated Program, material purchases made by the WDC and reimbursement due to the WDC for use of the WDC-owned or rented equipment. Rates of reimbursement will be based on existing city audited rate, if none, then pursuant to reasonable industry standards. Reimbursable payroll costs are limited to actual WDC payroll for work on the Project or Program and fringe benefits as set forth in this Section 6.

6.5 Reimbursement: The WDC shall seek reimbursement for its expenditures first from any Project or Program funding source as may be allowed or granted. Upon approval of reimbursement for any portion of the WDC costs and expenses, by any other funding source, the WDC shall submit to the City invoicing for the City's proportionate share of the reimbursable costs and expenses pursuant to any cost sharing established by the PAL.

6.6 Proposal Costs: All costs of the WDC in preparing its estimate of cost for this Designated Project or Designated Program shall be solely borne by the WDC and are not included in the compensation to be paid by the City to the WDC under this Agreement or any other agreement.

6.7 Payment for Services, Materials and Employees: The WDC shall be fully and solely responsible for the suitability of and compliance with this Agreement, of all labor, services, equipment, materials, reports, plans, specifications, deliverables, incidentals, etc. furnished to the City by the WDC under this Agreement. The WDC shall promptly pay all employees as their pay falls due, shall pay promptly as they fall due all bills for labor, services, equipment, materials, reports, plans, specifications, deliverables, incidentals, etc., going into the work, and all bills for insurance, bonds, Worker's Compensation coverage, Federal and State Unemployment Compensation, and Social Security charges applicable to this project. Before final payment is made, the WDC shall furnish a legal statement to the City that all payments required under this subparagraph have been made.

6.8 Liens: Neither the final payment nor any part of any retained percentage, if any, shall become due until the WDC, if requested by the City, shall deliver to the City

a complete release of all liens arising out of this agreement, or receipts in full (subject to contractual retainages) in lieu thereof, and, if required, in either case, an affidavit that so far as the WDC has knowledge or information, the releases and receipts include all the labor and material for which a lien could be filed; but the WDC may, if any subcontractor refuses to furnish a release or receipt in full, furnish a bond satisfactory to the City, to indemnify it against any lien. If any lien remains unsatisfied after all payments are made, the WDC shall refund to the City all moneys that the City may be compelled to pay in discharging such a lien, including all costs and a reasonable attorney's fee.

6.9 Review of Work: The WDC shall permit the City to review, at any time, all work performed under the terms of this Agreement at any stage of the work. The WDC shall maintain or cause to be maintained, throughout the duration of the Project and for a reasonable period thereafter as may be necessary for any required or desired audits, all records, books or other documents relative to salaries, fringe benefits, overhead, charges, costs, expenses, fees, alleged breaches of the agreement, settlement of claims or any other matter pertaining to the WDC's demand for payment. Further any and all such records of the WDC pertaining to the Project shall be available for review by the City at all reasonable times. The City shall not certify fees for payment to the WDC until the City has determined that the WDC has completed the work in accordance with the requirements of this Agreement.

7. HOLD HARMLESS:

7.1 The WDC shall indemnify, defend, and hold harmless the City and its boards, the City's Board of Education (if applicable), commissions, agents, officials and employees from and against all claims, suits, damages, losses, judgments, costs and expenses including attorney's fees arising out of or resulting from the delivery of the labor, services, equipment, materials, reports, plans, specifications, deliverables, incidentals, etc., provided that any such claims, suits, damages, losses, judgments, costs or expenses (a) are attributable to bodily injury, sickness, disease or death, or injury to or destruction of tangible property (other than the services itself) including the loss of use resulting there from, and (b) are caused by any willful or negligent act or omission of the WDC, its employees, its subcontractors, or anyone employed by them or anyone for whose acts any of them may be liable.

7.2 In any and all claims against the City or any of its boards, agents, employees or officers by the WDC or any employee of the WDC, any subcontractor, anyone directly or indirectly employed by any of them or anyone for whose acts any of them may be liable, the indemnification obligation under Paragraph 7.1, herein, shall not be limited in any way by any limitation on the amount or type of damages, compensation or benefits payable by or for the WDC or any subcontractor under Worker's Compensation Acts, disability benefit acts or other employee benefit acts.

7.3 The WDC understands and agrees that any insurance required by this agreement, or otherwise provided by the WDC, shall in no way limit the responsibility to indemnify, defend, keep and hold harmless the City as provided in this agreement.

8. INSURANCE:

8.1 The WDC shall not commence work under this agreement until all insurance required under this Section 8 has been obtained by the WDC and/or such insurance has been approved by the City. The WDC shall not allow any subcontractor to commence work on any subcontract until all insurance required of any such contractor has been so obtained and approved by the WDC.

8.2 Insurance Requirements: Insurance shall be provided by insurers that are satisfactory to the WDC, authorized to do business in the State of Connecticut, that have at least an "A-" Best's Rating, and are in an A.M. Best financial size category of VII or higher. The A.M. Best classifications are based on the most current A.M. Best Company ratings or an equivalent City approved rating system.

8.3 Policies: The WDC's General, Automobile and Excess Liability Insurance policies shall be endorsed to add the City as an additional insured. The insurance afforded the additional insured shall be primary insurance and the coverage and limits provided under the WDC's policies shall not be reduced or prorated by the existence of any other insurance applicable to any loss the additional insured may have suffered. Each insurance policy shall state that the insurance company shall agree to investigate and defend the insured against all claims for damages, provided the claim is for a loss covered by the terms of the applicable policy, even if groundless. If any insurance required herein is to be issued or renewed on a claims made form as opposed to an occurrence form, the retroactive date for coverage shall be no later than the commencement date of this agreement and shall provide that in the event of cancellation or non-renewal, the discovery period for insurance claims ("Tail Coverage") shall be available for at least 60 months.

The following policies with stated limits shall be maintained, in full force and effect, at all times during which the services are to be performed by the WDC:

A. General Liability Insurance: $1,000,000.00 per occurrence, $2,000,000.00 aggregate. Providing coverage to protect the City for all damages arising out of bodily injuries sickness or death of all persons in any one accident or occurrence and for all damages arising out of destruction of property in any one accident or occurrence.

B. Automobile Liability Insurance: $1,000,000.00 combined single limit (CSL). Providing coverage to protect the City with respect to claims for damage for bodily injury and or property damage arising out of ownership,

maintenance, operation, use or loading and unloading of any owned or non-owned vehicle

C. Workers' Compensation: Statutory Limits within the State of Connecticut. The WDC shall comply with all State of Connecticut statutes as it relates to workers' compensation.

D. Excess Liability Insurance: $3,000,000.00 aggregate limit. Comprehensive general liability umbrella insurance coverage.

8.4 Failure to Maintain Insurance: In the event the WDC fails to maintain the minimum required coverage as set forth herein, the City may, at its option, purchase same and offset the WDC's invoices for the cost of said insurance.

Cancellation: The WDC shall provide a copy of all notices of cancellation received from their insured within 5 days of said receipt, by them of said notice of cancellation, regardless of the reason for such cancellation.

8.5 Certificates of Insurance: At the time the WDC executes this agreement, it shall furnish to the City, subject to City approval, certificate(s) of insurance verifying the above coverage's, including the naming of the City of Waterbury, as follows:

"The City of Waterbury and its Board of Education (if applicable)
are listed as additional insured as their interests may appear".

8.6 The WDC must supply replacement/renewal certificates at least 30 days prior to the expiration of the policy (ies). Said certificates shall contain a provision that coverage afforded under the policies shall not be cancelled or reduced for any reasons unless notice of not less than thirty (30) calendar days has been mailed to the Risk Manager, 235 Grand Street, Waterbury, CT. 06702.

8.7 Upon request, the WDC shall deliver to the City a copy of the WDC's insurance policies, endorsements, and riders.

9. CONFORMANCE WITH FEDERAL, STATE AND OTHER JURISDICTIONAL REQUIREMENTS:

By executing this Agreement, the WDC represents and warrants that, at all pertinent and relevant times to the Agreement, it will remain in full compliance with all applicable statutes, acts, ordinances, guidelines, resolutions, orders, judgments, decrees, injunctions, rules, and regulations of all government authorities applicable to performance by the WDC of services hereunder, including those having jurisdiction over its registration and licensing to perform services hereunder; including, but not limited to, the following: EQUAL EMPLOYMENT OPPORTUNITY ACT; COPELAND ANTI-KICKBACK ACT, as supplemented in the Department of Labor Regulations (29 CFR Part 3); DAVIS-BACON ACT as supplemented by Department of Labor Regulations (29

CFR Part 5); Section 103 and 107 of the Contract Work Hours and Safety Standards Act, as supplemented by the Department of Labor Regulations (29 CFR Part 5); and the HOUSING and COMMUNITY DEVELOPMENT ACT of 1974, as amended. All applicable sections of the City Charter and Code of Ordinances are incorporated by reference and made a part hereof.

The WDC hereby agrees and shall comply with any and all requirements of the Freedom of Information Act, as it may be amended from time-to-time, with reference to this contract and any work performed by WDC and/or any of its subcontractors or agents.

9.1 Permits, Laws, Taxes and Regulations. Permits and licenses necessary for the delivery and completion of the WDC's work and services shall be secured in advance and paid by the WDC. The WDC shall give all notices and comply with all laws, ordinances, rules and regulations bearing on the conduct of the work and services as specified.

9.2 Taxes-Federal, State and Local. The City is exempt from Federal Excise and Transportation, State and Local Sales and Use Taxes, including without limitation, taxes that would otherwise be imposed upon the WDC for transactions required or necessitated hereunder between it and its subcontractors, suppliers, etc. The WDC remains liable, however, for any applicable tax obligations it incurs. Moreover, the WDC represents that the proposal and pricing contained in any PAL will not include an amount payable for said taxes.

9.3 Labor and Wages. The WDC shall conform to the labor laws of the State of Connecticut, and all other laws, ordinances, and legal requirements affecting the work in Connecticut and shall require such conformance in its contracts with subcontractors.

9.4 The WDC is aware of the provisions of Title 31, §53 of the Connecticut General Statutes, latest revision (the "Act"), concerning the payment of minimum wages and other payments or contributions established by the State of Connecticut Labor Commissioner for work on public facilities. The provisions of the Act are incorporated by reference and made a part of this agreement. The Act provides, in part, that the prevailing wage law applies to (i) new construction where the total cost of all work performed by all contractors and subcontractors is equal to or greater than $400,000.00, and (ii) remodeling, refurbishing, rehabilitation, alteration or repair of any project where the total cost of all work performed by all contractors and subcontractors is equal to or greater than $100,000.00.

10. DISCRIMINATORY PRACTICES:

In performing this agreement, the WDC shall not discriminate against any employee or applicant for employment, with respect to his or her hire, tenure, terms, conditions or privileges of employment, or any matter directly or indirectly related to employment, because of race, color, sex, age, religious creed, disability, national origin or ancestry, marital status, family status, prior psychiatric treatment, health care, military

status or source of income or because of a handicap that is unrelated to the employee's or the applicant's ability to perform the duties of a particular job or position. Subcontracts with each subcontractor shall contain a provision requiring non-discrimination in employment as herein specified. This covenant is required pursuant to §93.04 of the Code of Ordinances of the City and any breach thereof may be regarded as a material breach of this agreement. Said provisions with subcontractors shall require conformity and compliance with all Local, State and Federal laws, rules and regulations and Executive orders pertaining to discrimination and equal opportunity requirements.

10.1 Discrimination Because of Certain Labor Matters: No person employed on the work covered by this agreement shall be discharged or in any way discriminated against because such person has filed any complaint or instituted or caused to be instituted any proceeding or has testified or is about to testify in any proceeding under or related to the labor standards applicable hereunder to its employer.

10.2 Equal Opportunity: In its execution of the performance of this agreement, the WDC shall not discriminate and shall comply with applicable laws prohibiting discrimination on the grounds of race, color, religion, sex, national origin or citizenship status, age or handicap. The WDC agrees to comply with all Local, State and Federal laws, rules and regulations and Executive orders pertaining to discrimination and equal opportunity requirements, and will require the same of all subcontractors.

11. CONFORMANCE WITH CITY ORDINANCE, HIRING OF WATERBURY RESIDENTS

Conformance with City Ordinance §34.15; Hiring Of Waterbury Residents On Certain Publicly-Funded Construction Projects, as amended from time-to-time. The Ordinance is attached hereto as Exhibit A and a copy of the current ordinance shall be prominently including in each contract/subcontract subject to §34.15.

11.1 The WDC shall comply with the specific requirements of "An Ordinance Concerning the Hiring of Waterbury Residents on Certain Publicly-Funded Construction Projects" (the "Good Jobs Ordinance"), as may be amended from time to time and as set forth in Chapter 34 of the Code of Ordinances of the City and shall require such compliance by subcontactors in its subcontracts. The Contractor does hereby acknowledge that it has reviewed a copy of the Good Jobs Ordinance and that it has read the Ordinance and that Contractor is familiar with the obligations imposed on the Contractor by the Good Jobs Ordinance.

11.2 Failure of the Contractor or its Subcontractors to comply with the Good Jobs Ordinance shall be a material breach of this Agreement.

12. HOUSING AND URBAN DEVELOPMENT SECTION 3 CLAUSE:

In the event a PAL is funded, in whole or in part, through Housing and Urban Development assistance, 24 C.F.R. §135.38 may apply and the WDC shall then be

required to comply with and include in subcontracts, the following language (referred to as the "Section 3 clause"):

12.1 The work to be performed under this contract is subject to the requirements of Section 3 of the Housing and Urban Development Act of 1968, as amended, 12 U.S.C. § 1701u (Section 3). The purpose of Section 3 is to ensure that employment and other economic opportunities generated by HUD assistance or HUD-assisted Projects covered by Section 3, shall, to the greatest extent feasible, be directed to low and very low-income persons, particularly persons who are recipients of HUD assistance for housing.

12.2 The parties to this contract agree to comply with HUD's regulations in 24 C.F.R. part 135, which implement Section 3. As evidenced by their execution of this contract, the parties to this contract certify that they are under no contractual or other impediment that would prevent them from complying with the part 135 regulations.

12.3 The contractor agrees to send to each labor organization or representative of workers with which the contractor has a collective bargaining agreement or other understanding, if any, a notice advising the labor organization or workers' representative of the contractor's commitments under this Section 3 clause, and will post copies of the notice in conspicuous places at the work site where both employees and applicants for training and employment positions can see the notice. The notice shall describe the Section 3 preference, shall set forth minimum number and job titles subject to hire, availability of apprenticeship and training positions, the qualifications for each; and the name and location of the person(s) taking applications for each of the positions; and the anticipated date the work shall begin.

12.4 The contractor agrees to include this Section 3 clause in every subcontract subject to compliance with regulations in 24 C.F.R. part 135, and agrees to take appropriate action, as provided in an applicable provision of the subcontract or in this Section 3 clause, upon a finding that the subcontractor is in violation of the regulations in 24 C.F.R. part 135. The contractor will not subcontract with any subcontractor where the contractor has notice or knowledge that the subcontractor has been found in violation of the regulations in 24 C.F.R. part 135.

12.5 The contractor will certify that any vacant employment positions, including training positions, that are filled (1) after the contractor is selected but before the contract is executed, and (2) with persons other than those to whom the regulations of 24 C.F.R. part 135 require employment opportunities to be directed, were not filled to circumvent the contractor's obligations under 24 C.F.R. part 135.

12.6 Noncompliance with HUD's regulations in 24 C.F.R. part 135 may result in sanctions, termination of this contract for default, and debarment or suspension from future HUD assisted contracts.

12.7 With respect to work performed in connection with Section 3 covered Indian housing assistance, section 7(b) of the Indian Self-Determination and Education Assistance Act (25 U.S.C. § 450e) also applies to the work to be performed under this contract. Section 7(b) requires that to the greatest extent feasible (i) preference and opportunities for training and employment shall be given to Indians, and (ii) preference in the award of contracts and subcontracts shall be given to Indian organizations and Indian-owned Economic Enterprises. Parties to this contract that are subject to the provisions of Section 3 and section 7(b) agree to comply with Section 3 to the maximum extent feasible, but not in derogation of compliance with section 7(b).

13. TERMINATION:

13.1 Termination of Agreement for Cause: If, through any cause, in part or in full, the fault of the WDC, the WDC shall materially fail to fulfill in a timely and proper manner its obligations under this agreement, or if the WDC shall commit a material violation any of the covenants, agreements, or stipulations of this Agreement, the City shall thereupon have the right to terminate this Agreement by giving written notice to the WDC of such termination and specifying the effective date thereof, at least fifteen (15) days before the effective date of such termination and an opportunity to cure by the end of the fifteen (15) day period. In the event of such termination, all finished or unfinished documents, data, studies, reports, specifications, deliverables, etc. prepared by the WDC under this agreement shall, at the option of the City, become the City's property, and the WDC shall be entitled to receive just and equitable compensation for any satisfactory work completed for such.

Notwithstanding the above, the WDC shall not be relieved of liability to the City for damages sustained by the City by virtue of any breach of this Agreement by the WDC, and the City may withhold any payments to the WDC for the purpose of setoff until such time as the exact amount of damages due the City from the WDC is determined.

13.2 Termination for Convenience of the City: The City may terminate this Agreement at any time for the convenience of the City, by a notice in writing from the City to the WDC. If this Agreement is terminated by the City as provided herein, the WDC will be paid an amount which bears the same ratio to the total compensation as the services actually performed bear to the total services of the WDC covered by this agreement, less payments of compensation previously made.

13.3 Termination for Non-Appropriation or Lack of Funding: The WDC acknowledges that the City is a municipal corporation and that this Agreement is subject to the appropriation of funds by the City sufficient for this agreement for each budget year in which this agreement is in effect. The WDC therefore agrees that the City shall have the right to terminate this Agreement in whole or in part without penalty in the event sufficient funds to provide for City payment(s) under this agreement is/are not

appropriated, not authorized or not made available pursuant to law, or such funding has been reduced pursuant to law.

A. Effects of Non-Appropriation: If funds to enable the City to effect continued payment under this Agreement are not appropriated, authorized or otherwise made available by law, the City shall have the right to terminate this Agreement without penalty at the end of the last period for which funds have been appropriated, authorized or otherwise made available by law by giving written notice of termination to the WDC.

B. Effects of Reduced Levels of Funding: If funding is reduced by law, or funds to pay the WDC for the agreed to level of the products, services and functions to be provided by the WDC under this Agreement are not appropriated, authorized or otherwise made available by law, the City may, upon seven (7) business days written notice to the WDC, reduce the level of the products, services or functions in such manner and for such periods of time as the City may elect. The services to be performed and the charges payable under this Agreement shall be equitably adjusted to reflect such reduced level of products, services or functions and the parties shall be afforded the rights set forth in this agreement.

C. No Payment for Lost Profits: In no event shall the City be obligated to pay or otherwise compensate the WDC for any lost or expected future profits.

14. RIGHTS UPON CANCELLATION OR TERMINATION:

14.1 Termination for Cause: In the event the City terminates this Agreement for cause, the WDC shall relinquish to the City any applicable interest, title and ownership including, but not limited to, perpetual use of any proprietary rights in and to the documents, data, studies, reports, specifications, deliverables, etc. provided to, in possession of, and properly invoiced and paid for by the City (except to the extent such invoiced amount is disputed). With regard to third party products, the WDC shall transfer all licenses to the City which the WDC is permitted to transfer in accordance with the applicable third party license. The City shall have no financial obligation to compensate the WDC for such terminated documents, data, studies, reports, specifications, deliverables, etc. unless payment is otherwise approved by the City prior to such termination. In the event of any litigation related to the termination of this Agreement, the prevailing party shall be entitled to its reasonable attorney fees and court awarded fees and costs incurred.

14.2 Termination for Lack of Funding or Convenience: In the event of termination by the City for lack of funding or convenience, the City shall pay the WDC for all documents, data, studies, reports, specifications, deliverables, etc. (including any holdbacks), installed and delivered to the City as of the Termination Date and the WDC shall relinquish to the City any applicable interest, title and ownership including, but not

limited to perpetual use of any proprietary rights in and to said documents, data, studies, reports, specifications, deliverables, etc. in possession of and paid for by the City (except to the extent any invoiced amount is disputed). The WDC shall be required to exercise commercially reasonable efforts to mitigate damages. In the event of a termination for Lack of Funding or Convenience the City and the WDC may negotiate a mutually acceptable payment to the WDC for reasonable demobilization expenses. Said demobilization expenses, if any, shall be handled in accordance with the provision of this agreement pertaining to Changes in the Work.

14.3 Termination by the WDC: The WDC may, by written notice to the City, terminate this agreement if the City materially breaches, provided that the WDC shall give the City thirty (30) calendar days prior written notice and an opportunity to cure by the end of said thirty day period. In the event of such termination, the WDC will be compensated by the City for work performed prior to such termination date and the WDC shall deliver to the City all deliverables as otherwise set forth in this agreement.

14.4 Assumption of Subcontracts: In the event of termination, the City shall assume any and all subcontracts for products, services and functions provided exclusively under this Agreement and may further pursue completion of the work under this Agreement by replacement contract or otherwise as the City may in its sole judgment deem expedient.

14.5 Delivery of Documents: In the event of termination, (i) the WDC shall promptly deliver to the City, in a manner reasonably specified by the City, all labor, services, equipment, materials, reports, plans, specifications, deliverables, incidentals, etc and other tangible items furnished by, or owned, leased, or licensed by, the City, and (ii) the City shall pay the WDC for all services performed and deliverables completed and accepted (pro-rated for deliverables partially completed) prior to the effective date of the termination (except to the extent any invoice amount is disputed).

14.6 Ownership of Instruments of Professional Services: The City acknowledges that the WDC's documents, data, studies, reports, specifications, deliverables, etc. created and to be created pursuant to this agreement, including electronic files, are Instruments of Professional Services. Nevertheless, subject to applicable trademark, copyright or patent law, the final Instruments of Professional Services, including, but not limited to, documents, data, studies, reports, specifications, deliverables, etc. prepared for the City under this agreement shall become the property of the City upon City payment for that Instrument of Professional Services and the City reserves the right to use the Instruments of Professional Services.

15. FORCE MAJEURE:

The WDC shall not be held responsible for delays nor be subject to liquidated damages when such delays are caused by conditions beyond its control, including without limitation:

A. Acts of God, fire, explosion, epidemic, cyclone, flood, war, strikes, revolution, civil commotion, or acts of public enemies.

B. Change of law and order, proclamation, regulation, ordinance, or governmental requirement.

C. Delays caused by the WDC's vendors, except where such delays are the result of lack of adequate coordination by the WDC.

Upon cessation of work for reason of force majeure delays, the WDC shall use its best efforts to meet the schedule set forth in a PAL.

16. SUBCONTRACTING:

16.1 The WDC shall not, without the prior written approval of the City, subcontract, in whole or in part, any of the WDC's services. Any subcontractor so approved shall be required to secure and maintain insurance coverage equal to or better than that required of the WDC and shall name the City as an additional insured party and said subcontractors shall deliver to the City a certificate of insurance evidencing such coverages. All subcontractors shall comply with all Federal, State and Local, laws, regulations and ordinances but such requirement shall not relieve the WDC from its requirement that all work and services provided or required hereunder shall comply with all Federal, State and Local, laws, regulations and ordinances.

16.2 The WDC shall be as fully responsible to the City for the acts and omissions of the WDC's subcontractors, and of persons either directly or indirectly employed by them, as it is for the acts and omissions of persons directly employed by the WDC.

17. AUDIT:

The City reserves the right to audit the WDC's books of account in relation to this agreement any time during the period of this agreement or at any time during the twelve month period immediately following the closing or termination of this agreement. In the event the City elects to conduct such an audit, the WDC shall immediately make available to the City all records pertaining to this agreement, including, but not limited to, payroll records, bank statements and canceled checks.

18. RISK OF DAMAGE AND LOSS:

The WDC shall be solely responsible for causing the timely repair to and/or replacement of, City personal property or item(s) intended to become City property hereunder, where the need for repair or replacement was caused solely by the WDC, by someone under the care and/or control of the WDC by any subcontractor of the WDC, or by any shipper or delivery service if the risk of loss was allocated to the WDC upon shipment. The WDC shall be solely responsible for all costs and expenses, including but

not limited to shipping, delivery, insurance, etc, associated with the foregoing repair and replacement obligation. Further, the WDC shall be solely responsible for securing the City's written acceptance of all completed repairs and replacements required hereunder. The City hereby retains sole discretion to determine whether a repair or a replacement is the proper remedy.

19. ENTIRE AGREEMENT:

This agreement shall constitute the complete and exclusive statement excepted as provided; other than as direct on behalf of the City, of the Contract between the parties as it relates to this transaction and supersedes all previous agreements and understandings, whether written or oral, relating to such subject matter. Any amendment to this agreement must be in writing and agreed to and executed by the City and the WDC.

20. INDEPENDENT CONTRACTOR RELATIONSHIP:

The relationship between the City and the WDC is that of client and independent contractor, and as further defined in Sections 31.265 through Sections 31.270 of the City of Waterbury Code of Ordinances. No agent, employee, or servant of the WDC shall be deemed to be an employee, agent or servant of the City. The WDC shall be solely and entirely responsible for its acts and the acts of its agents, employees, servants and subcontractors during the performance of this agreement. It is the express intention of the parties hereto, and the WDC hereby agrees and covenants, that it and any and all third party(ies) and subcontractor(s) retained by the WDC hereunder is/are not and shall not be deemed an employee of the City of Waterbury, but is/are and shall remain an independent contractor relative to the City and that nothing herein shall be interpreted or construed as creating or establishing the relationship of employer-employee between the City of Waterbury and the WDC or between the City of Waterbury and any third party(ies) or subcontractor(s). Thus, the WDC hereby covenants and agrees that it, its subcontractor(s) and third party (ies) shall not be entitled to the usual characteristics of employment, such as income tax withholding, F.I.C.A. deductions, pension or retirement privileges, Workers Compensation coverage, health benefits, etc. and that the WDC shall be solely and entirely responsible for its acts and the acts of its agents, employees, servants, representatives, subcontractors and third party (ies).

Notwithstanding the designation of an independent contractor, the WDC hereby agrees that it shall be subject to any and all requirements of the Freedom of Information Act, as it may be amended from time-to-time, with reference to this contract and any work performed by WDC and/or any of its subcontractors or agents.

21. SEVERABILITY:

Whenever possible, each provision of this Agreement shall be interpreted in such a manner as to be effective and valid under applicable law. If any provision of this agreement, however, is held to be prohibited or invalid under applicable law, such provision shall be deemed restated to reflect the original intentions of the parties, as

nearly as possible in accordance with applicable law, and if capable of substantial performance, the remaining provisions of this agreement shall be enforced as if this agreement was entered into without an invalid provision. If the ruling and/or controlling principle of law or equity leading to the ruling is subsequently overruled, modified or amended by legislation, judicial or administrative action, then the provision(s) in question as originally set forth in this agreement shall be deemed valid and enforceable to the maximum extent permitted by the new controlling principal of law or equity.

22. SURVIVAL:

Any provisions of this Agreement that impose continuing obligations on the parties shall survive the expiration or termination of this agreement for any reason.

23. CONFLICTS OR DISPUTES:

This Agreement represents the full and complete concurrence between the City and the WDC, governs all disputes between them and supersedes all statements to the contrary occurring either in proposals or other prior agreements, oral or written, and all other communications between the parties relating to this subject. This agreement or any section thereof shall not be construed against any party due to the fact that the agreement or any section thereof was drafted by such party.

24. DISPUTES; LEGAL PROCEEDINGS; WAIVER OF TRAIL BY JURY AND CONTINUED PERFORMANCE:

The WDC agrees that its waives a trial by jury as to any and all claims, causes of action or disputes arising out of this agreement or services to be provided pursuant to this agreement. Notwithstanding any such claim, dispute or legal action, the WDC shall continue to perform services under this agreement in a timely manner, unless otherwise directed by the City.

25. BINDING AGREEMENT:

The City and the WDC each bind themselves, and their successors, assigns and legal representatives to the other party to this Agreement and to the successors, assigns and legal representatives of such other party with respect to all covenants of this Agreement.

26. WAIVER:

Any waiver of the terms and conditions of this agreement by either of the parties hereto shall not be construed to be a waiver of any other term or condition of this agreement.

27. GOVERNING LAWS:

This Agreement, its terms and conditions and any claims arising there from shall be governed by the laws of the State of Connecticut.

28. NOTICE:

Except as otherwise specifically prohibited in this Agreement, whenever under this Agreement approvals, authorizations, determinations, notices, satisfactions or waivers are required or permitted, such items shall be effective and valid only when given in writing signed by a duly authorized officer of the City or the WDC, and delivered in hand or sent by mail, postage prepaid, to the party to whom it is directed, which until changed by written notice, are as follows:

WDC: Todd M. Montello, CEO
83 Bank Street, 3rd Floor
Waterbury, CT 06702

City: City of Waterbury
c/o Joseph Geary, Chief of Staff
Mayor's Office
235 Grand Street
Waterbury, CT 06702

29. ACKNOWLEDGMENTS, NOTICES AND REPRESENTATIONS:

The WDC shall supply the documents, data, studies, reports, specifications, deliverables, etc. under this Contract shall comply with all applicable Federal, State and Municipal statutes, regulations, charters, ordinances, rules, etc, whether or not they are expressly stated in this Contract, including but not limited to the following:

29.1 It shall be a material breach of this Contract, and, except as may be permitted by regulations or rulings of the City of Waterbury Board of Ethics, it shall be a violation of the City's Code of Ordinances, for any Public Official, City Employee or Member of a Board or Commission who is participating directly or indirectly in the procurement process as set forth in the City's Code of Ordinances, including those participating in exempt transactions, to become or be the employee of the WDC contracting with the governmental body by whom the Official, Employee, or Board or Commission member is employed or is a member.

29.2 It shall be a material breach of this Contract, and it shall be a violation of the City's Code of Ordinances for the WDC to offer, give, or agree to give any current or former Public Official, Employee or Member of a Board or Commission, or for such current or former Public Official, Employee or Member of a Board or Commission to solicit, demand, accept or agree to accept from the WDC, a gratuity or an offer of

employment in connection with any: decision; approval; disapproval; recommendation; preparation of any part of a Project requirement or a requisition; influencing the content of any specification or procurement standard; or rendering of advice, investigation, auditing, or in any other advisory capacity in any proceeding or application, request for ruling, determination, claim or controversy, or other particular matter, pertaining to any Project requirement or a Contract or Purchase Order, or to any solicitation or proposal therefore.

29.3 It shall be a material breach of this Contract and it shall be a violation of the City's Code of Ordinances for any payment, gratuity, or offer of employment to be made as an inducement for the award of a subcontract or order, by or on behalf of a subcontractor, the prime consultant/vendor or higher tier subcontractor or any person associated therewith, under a Contract or Purchase Order to the City.

29.4 The value of anything transferred or received in violation of the City's Charter, Code of Ordinances, and/or regulations promulgated there under, by the WDC subject to said Charter and/or Ordinances may be recovered by the City.

29.5 Upon a showing that a subcontractor made a kickback to the City, a prime consultant/vendor or a higher tier subcontractor in connection with the award of a subcontract or order there under, it shall be conclusively presumed that the amount thereof was included in the price of the subcontract or order and ultimately borne by the City and will be recoverable hereunder from the recipient. In addition, said value may also be recovered from the subcontractor making such kickbacks. Recovery from one offending party shall not preclude recovery from other offending parties.

29.6 It shall be a material breach of this Contract and it shall be a violation of the City's Code of Ordinances for the WDC to be retained, or to retain a person, to solicit or secure a contract with the City upon an agreement or understanding for a commission, percentage, brokerage, or contingent fee; and the WDC, before being awarded a City Contract, shall deliver to the City, on a City authored form, a representation that the WDC has not retained anyone in violation of this subsection, the failure to deliver said form being a material breach of this Contract and a violation of the City's Code of Ordinances. Note, however, this subsection shall not apply to full-time Employees who, as a condition of their employment, may be entitled to bonuses or other fees in accordance with their employment relationship.

29.7 The WDC hereby expressly represents that it has complied with those sections of the City's Code of Ordinances requiring that it has (1) delivered to the City an affidavit, on a City authored form, stating that the WDC and its affiliates have no delinquent taxes or other financial obligations owned to the City; (2) filed the City authored financial disclosure statement form as set forth in the City's Code of Ordinances regarding disclosure of financial interests; (3) delivered to the City a written acknowledgement, on a City authored form, evidencing receipt of a copy of the "Ethics and Conflict of Interest" ordinance for the City of Waterbury and hereby expressly represents that the WDC is in full compliance with the entirety of said Code of

Ordinances; and (4) filed a current list of all taxable personal and real property as required by the State of Connecticut General Statutes. Any violation of this subsection shall be deemed a material breach of this Contract and shall be a violation of the City's Code of Ordinances.

29.8 INTEREST OF CITY OFFICIALS. No member of the governing body of the City, and no other officer, employee, or agent of the City, who exercises any functions or responsibilities in connection with the carrying out of the project to which this agreement pertains, shall have any personal interest, direct or indirect, in this Agreement.

29.9 PROHIBITION AGAINST CONTINGENCY FEES. The Contractor hereby represents that it has not retained anyone to solicit or secure a contract with the City upon an agreement or understanding for a commission, percentage, brokerage or contingency fee.

29.10 FREEDOM OF INFORMATION ACT NOTICE. Pursuant to State statute, in the event the total compensation payable to the WDC set forth in Section 6 herein is greater than $2,500,000.00, the City is entitled to receive a copy of any and all WDC records and files related to the performance of this contract and those records and files are subject to the Freedom of Information Act ("the Act") and may be disclosed by the City pursuant to the Act.

30. CITY AND WDC DESIGNEES:

30.1 City Designee: The person in charge of administering the services described in this Agreement on behalf of the City ("City Representative") shall be the Mayor and/or his designee as set forth in writing to the WDC.

30.2 WDC Designee: The person responsible for the services to be performed by the WDC as described in this Agreement ("WDC Representative") shall be the Project Manager and the Chief Executive Officer of the WDC or any other individual authorized in writing by the City.

(End of text, signatures to follow)

IN WITNESS WHEREOF, the parties hereto execute this agreement on the dates signed below.

WITNESS:

Andrea Martelli

Patricia Hueson

CITY OF WATERBURY

By: _____
Neil M. O'Leary, Mayor

Date: 1/12/14

APPROVED AS TO FORM

Attorney, Corporation Counsel's Office

WITNESS:

Andrea Martelli

WATERBURY DEVELOPMENT CORPORATION

By: Todd M. Montello
Todd M. Montello, CEO
duly authorized

Date: 12 February 2014

ADDENDA

ADDENDUM A -	CDBG Program Statement of Work; Specific CDBG Certifications
ADDENDUM B -	HOME Program Statement of Work; Specific HOME Certifications
ADDENDUM C - Certifications	Emergency Solutions Grant Statement of Work; ESG
ADDENDUM D -	Project Management Scope of Services

ADDENDUM "A"
CDBG PROGRAM

I. STATEMENT OF WORK.

A. WDC Responsibilities. The WDC shall:

1. Administer all aspects of the CDBG Program for the City in a manner satisfactory to the City and to HUD and consistent with any and all relevant Federal, State, and City standards required by the City and/or by HUD as a condition of providing these funds;

2. Prepare and comply with Citizen Participation Schedule by reviewing all funding requests with the Citizen Advisory Committee;

3. Host all required public hearings;

4. Prepare the five-year Consolidated Plan along with the annual Plan for each program year of the five years of the Consolidated Plan in accordance with HUD regulations as set forth in 24 C.F.R. §91.200, et seq. (The principal components of the Consolidated/Annual Plan consist of an assessment of the community's affordable housing needs, non-housing needs, economic development, neighborhood facilities/infrastructure improvements, and supportive social services);

5. Meet the national objectives guiding the grants and the local use of the funds therefrom, principally to benefit low and moderate-income persons by providing decent housing and fostering a suitable living environment;

6. Publicize the consolidated Plan/Annual Plan, acquiring all required City board/commission approvals, the oversight board approval and submit the plan to HUD yearly for approval;

7. Prepare, in conjunction with the Consolidated/Annual Plan, the Environmental Review Record along with the Request for Release of Funds for all projects in the Consolidated Annual Plan;

8. Upon all funding acceptance and receipt, plan, review and administer all proposed projects. (Funds will be deposited with the City and subsequently transferred to the WDC);

9. Comply with all timeliness, procurement requirements, monitoring and Davis Bacon Wage requirements, when applicable for all proposed projects;

10. File all required reports to HUD regarding funding and project compliance (e.g. IDIS, Labor Reports, MBE reporting, and the ESG Bi-Annual report);

11. At the completion of each program year for the five-year Consolidated Plan, prepare, review and submit the Consolidated Annual Performance and Evaluation Report (CAPER); and

12. Undertake, conduct and perform any and all such other actions, function and/or activities which may be necessary or required to implement and comply with Federal, State and local law and HUD or State regulations relating to the CDBG Program.

B. City of Waterbury Responsibilities. The City shall:

1. Remain primarily responsible to HUD for the grants and programs provided under the Funding Approval/Agreements by and between the City and HUD;

2. Through the Office of the Mayor, prioritize the goals for expenditure of CDBG funds;

3. On a regular basis as required by Federal regulations, oversee and monitor the WDC operations and implementation of the HUD grants and programs;

4. Maintain oversight and control of the approval process for payments and disbursements of such payments as needed by the WDC; and

5. Designate and provide City personnel responsible for such oversight and monitoring, whose services relative to such monitoring shall be paid for from grant funds, as allowable.

II. RECORDS AND REPORTS.

A. Documentation and Record-Keeping.

1. **Records to be Maintained.** The WDC shall maintain all records (i) required by the Federal regulations specified in such regulations as are pertinent to the grants, programs and/or activities to be funded under this Agreement, and (ii) records specified herein. Such records shall include, but not be limited to:

a. Records providing a full description of each activity undertaken;;
b. Records on matching funds, if applicable;
c. Records demonstrating that each activity undertaken meets the objectives of the pertinent grant or program;

d. Records required to determine the eligibility of activities;
e. Records required to document the acquisition, improvement, use or disposition of real property acquired or improved with grant program funds;
f. records documenting compliance with the fair housing and equal opportunity components of the pertinent grant or program; and
g. All other records necessary to document funding and project compliance with relevant law as set forth in Section I.1 hereof.

2. **Retention.** The WDC shall retain all records pertinent to the expenditures incurred under this Agreement for a period of four (4) years after the termination of all activities funded under this Agreement. Records for non-expendable property acquired with funds under this contact shall be retained for four (4) years after final disposition of such property. Records for any displaced person must be kept for four (4) years after he/she has received final payment. Notwithstanding the above, in the event of litigations, claims, audits, negotiations or other actions that involve any of the records cited and that have started before the expiration of the four (4) year period, such records shall be retained until completion of the actions and resolution of all issues, or the expiration of the four (4) year period, whichever occurs later.

3. **Client Data.** The WDC shall maintain client data demonstrating client eligibility for services provided. Such data shall include, but not be limited to, client name, address, income level or other basis for determining eligibility, and description of service provided. Such information shall be made available to the City upon request.

4. **Disclosure.** The WDC understands that client information collected under this Agreement is private and the use or disclosure of such information, when not directly connected with the administration of the City's or WDC's responsibilities with respect to services provided under this Agreement, is prohibited unless prior written consent is obtained from such person receiving service or from a responsible parent/guardian in the case of a minor receiving service or otherwise as required by applicable law.

5. **Property Records.** The WDC shall maintain real property inventory records, which clearly identify properties purchases, improved or sold. Properties retained shall continue to meet eligibility criteria and shall conform to the "changes in use" restrictions specified in applicable regulations. WDC shall further maintain records, which clearly identify any and all personal property and/or fixtures purchased, improved or sold.

6. **Close-Outs.** The WDC's obligation to the City shall not end until all close-out requirements are completed. Activities during this close-out period shall include, but are not limited to, making final payments, disposing or program assets (including the return of all unused materials, equipment, unspent cash advances,

program income balances and accounts receivable to the City), and determine the custodianship of records.

7. **Audits and Inspections.** All WDC records with respect to any matters covered by this Agreement shall be made available to the City, its designee(s) or the Federal Government, at any time during normal business hours, as often as the City deems necessary , to audit, examine, and make excerpts or transcripts of all relevant data. In accordance with applicable regulations and law, the WDC hereby agrees to conduct an annual audit.

THE WDC HEREBY AGREES TO HAVE AN ANNUAL AUDIT CONDUCTED IN ACCORDANCE WITH the "SINGLE AUDIT AMENDMENTS ACT" and the OFFICE OF MANAGEMENT AND BUDGET (OMB) CIRCULAR NO. A-133, titled "AUDITS OF STATE, LOCAL GOVERNMENTS AND NON-PROFIT ORGANIZATIONS" AND SUBMIT A COPY OF THIS AUDIT TO THE CITY WITHIN THIRTY (30) DAYS OF COMPLETION OF SAID AUDIT.

Any deficiencies noted in any audit report(s) shall be fully cleared and remedied by the WDC within thirty (30) calendar days of the City's receipt of such audit report.

Failure of the WDC to comply with this subsection shall be deemed a material breach of this Agreement.

8. **Financial Statements.** WDC shall provide City with audited financial statements for the most recent tax year prior to the start date specified in Section II above, if applicable.

9. **Employee Verification.** All WDC records with respect to WDC employees, including, but not limited to (i) time sheets, (ii) payroll, (iii) cancelled checks, (iv) etc., shall be made available to the City at any time during normal City business hours. The City shall be entitled to interview WDC employees to verify employment information at any time during the WDC's normal business hours as often as City deems necessary.

III. PROGRAM INCOME.

A. Program Income. The WDC shall promptly remit any and all program income, if any, to the City.

IV. UNIFORM ADMINISTRATIVE REQUIRMENTS. WDC shall comply with applicable uniform administrative requirements, as described in 24 C.F.R. §570.502.

V. OTHER PROGRAM REQUIREMENTS. WDC shall carry out each activity in compliance with all Federal laws and regulations described in 24 C.F.R. Part 570, Subpart K, except that:

A. The WDC does not assume the City's environmental responsibilities described at 24 C.F.R. §570.604; and

B. The WDC does not assume the City's responsibility for initiating the review process under the provisions of 24 C.F.R. Part 52.

VI. SUSPENSION AND TERMINATION. In accordance with 24 C.F.R. §85.43, suspension or termination may occur if the WDC materially fails to comply with any term of the award, and that the award may be terminated for convenience in accordance with 24 C.F.R. §85.44.

VII. REVERSION OF ASSETS. Upon the expiration of this Agreement by termination or otherwise, the WDC shall transfer to the City any CDBG funds on hand at the time of expiration and any accounts receivable attributable to the use of CDBG funds. Further, any real property under the WDC control that was acquired or improved in whole or in part with CDBG funds (including CDBG funds provided to the WDC in the form of a loan) in excess of $25,000.00 shall either:

A. Be used to meet on of the national objectives in 24 C.F.R. §570.208 (formerly §570.901) until five years after expiration of the agreement, or for such longer period of time as determined to be appropriate by the City; or

B. If the WDC determines, after consultation with any affected citizens, that it is appropriate to change the use of the property to a use which does not qualify under Paragraph VII A of this section it may retain or dispose of the property for the changed use if the CDBG program is reimbursed in the amount of the current fair market value of the property, less any portion of the value attributable to expenditures of non-CDBG funds for acquisition of, and improvement to, the property. If the change of use occurs after closeout, the provisions governing income from the disposition of the real property in 24 C.F.R. §570.504(b)(4) and (5), as applicable, shall apply to the use of funds reimbursed. Following the reimbursement of the CDBG program in accordance with the Paragraph VII B hereof, the property no longer will be subject to any CDBG requirements.

ADDENDUM "B"
HOME PROGRAM

I. STATEMENT OF THE WORK.

A. WDC Responsibilities. The WDC shall:

1. Administer all aspects of the HOME Program for the City in a manner satisfactory to the City and to HUD and consistent with any and all relevant Federal, State, and City standards required by the City and/or by HUD as a condition of providing these funds;

2. Prepare and comply with the Citizen Participation Schedule by reviewing all line item allocations with the Citizen Advisory Committee;

3. Host all required public hearings;

4. Prepare the five-year Consolidated Plan along with the Annual Plan for each program year of the five years of the Consolidated Plan in accordance with HUD regulations as set forth in 24 C.F.R. §91.200, et seq. (The principal components of the Consolidated/Annual Plan consist of an assessment of the community's affordable housing needs, non-housing needs, economic development, neighborhood facilities/infrastructure improvements, and supportive social services);

5. Meet the national objectives guiding the grants and the local use of the funds therefrom, principally to benefit low and moderate-income persons by providing decent housing and fostering a suitable living environment;

6. Publicize the Consolidated Plan/Annual Plan, acquiring all required City board/commission approvals, the oversight board approval and submit the plan to HUD yearly for approval;

7. Prepare, in conjunction with the Consolidated/Annual Plan, the Environmental Review Record along with the Request for Release of Funds for all projects in the Consolidated Annual Plan;

8. Upon all funding acceptance and receipt, plan, review and administer all proposed projects. (Funds will be deposited with the City and subsequently transferred to the WDC);

9. Comply with all timelines, procurement requirements, monitoring and Davis Bacon Wage requirements, when applicable for all proposed projects;

10. File all required reports to HUD regarding funding and project compliance (e.g. IDIS, Labor Reports, MBE reporting, and the ESG Bi-Annual Report);

11. At the completion of each program year for the five-year Consolidated Plan, prepare, review and submit the Home Annual Performance Report; and

12. Undertake, conduct and perform any and all such other actions, functions and/or activities which may be necessary or required to implement and comply with Federal, State and local law and HUD or State regulations relating to the HOME program.

B. City of Waterbury Responsibilities. The City shall:

1. Remain primarily responsible to HUD for the grants and programs provided under the Funding Approval/Agreements by and between the City and HUD;

2. On a regular basis as required by Federal regulations, oversee and monitor the WDC operations and implementation of the HUD grants and programs;

3. Maintain oversight and control of the approval process for payments and disbursement of such payments as needed by the WDC; and

4. Designate and provide City personnel responsible for such oversight and monitoring.

II. PROGRAM INCOME.

A. Program Income. The WDC shall promptly remit any and all program income, if any, to the City.

III. UNIFORM ADMINISTRATIVE REQUIREMENTS. WDC shall comply with applicable uniform administrative requirements, as describe in 24 C.F.R. §92.505.

IV. OTHER PROGRAM REQUIREMENTS. WDC shall carry out each activity in compliance with all Federal laws and regulations described in 24 C.R.F. Part 92, Subpart H, except that:

A. The WDC does not assume the City's responsibilities for environmental review under 24 C.F.R. §92.352; and

B. The intergovernmental review process in 24 C.F.R. §92.357 does not apply.

V. AFFIRMATIVE MARKETING. If the HOME funds administered by the WDC are used for housing containing five or more assisted units, WDC shall comply with the affirmative marketing responsibilities set forth in 24 C.F.R. §92.351.

VI. REQUESTS FOR DISBURSEMENT OF FUNDS. WDC may not request disbursement of funds under this agreement until the funds are needed for payment of eligible costs. The amount of each request must be limited to the amount needed.

VII. REVERSION OF ASSETS. Upon the expiration of this Agreement by termination or otherwise, the WDC shall transfer to the City and HOME funds on hand at the time of expiration and any accounts receivable attributable to the use of HOME funds.

VIII. RECORDS AND REPORTS.

A. Documentation and Record-Keeping.

1. **Records to be Maintained.** The WDC shall maintain all records (i) required by the Federal regulations specified in such regulations as are pertinent to the grants, programs and/or activities to be funded under this Agreement, and (ii) records specified herein. Such records shall include, but not be limited to:

a. Records providing a full description of each activity undertaken;;
b. Records on matching funds, if applicable;
c. Records demonstrating that each activity undertaken meets the objectives of the pertinent grant or program;
d. Records required to determine the eligibility of activities;
e. Records required to document the acquisition, improvement, use or disposition of real property acquired or improved with grant program funds;
f. records documenting compliance with the fair housing and equal opportunity components of the pertinent grant or program; and
g. All other records necessary to document funding and project compliance with relevant law as set forth in Section I.1 hereof.

2. **Retention.** The WDC shall retain all records pertinent to the expenditures incurred under this Agreement for a period of four (4) years after the termination of all activities funded under this Agreement. Records for non-expendable property acquired with funds under this contact shall be retained for four (4) years after final disposition of such property. Records for any displaced person must be kept for four (4) years after he/she has received final payment. Notwithstanding the above, in the event of litigations, claims, audits, negotiations or other actions that involve any of the records cited and that have started before the expiration of the four (4) year period, such records shall be retained until completion of the actions and resolution of all issues, or the expiration of the four (4) year period, whichever occurs later.

3. **Client Data.** The WDC shall maintain client data demonstrating client eligibility for services provided. Such data shall include, but not be limited to, client name, address, income level or other basis for determining eligibility, and description of service provided. Such information shall be made available to the City upon request.

4. **Disclosure.** The WDC understands that client information collected under this Agreement is private and the use or disclosure of such information, when not directly connected with the administration of the City's or WDC's responsibilities with respect to services provided under this Agreement, is prohibited unless prior written consent is obtained from such person receiving service or from a responsible parent/guardian in the case of a minor receiving service or otherwise as required by applicable law.

5. **Property Records.** The WDC shall maintain real property inventory records, which clearly identify properties purchases, improved or sold. Properties retained shall continue to meet eligibility criteria and shall conform to the "changes in use" restrictions specified in applicable regulations. WDC shall further maintain records, which clearly identify any and all personal property and/or fixtures purchased, improved or sold.

6. **Close-Outs.** The WDC's obligation to the City shall not end until all close-out requirements are completed. Activities during this close-out period shall include, but are not limited to, making final payments, disposing or program assets (including the return of all unused materials, equipment, unspent cash advances, program income balances and accounts receivable to the City), and determine the custodianship of records.

7. **Audits and Inspections.** All WDC records with respect to any matters covered by this Agreement shall be made available to the City, its designee(s) or the Federal Government, at any time during normal business hours, as often as the City deems necessary , to audit, examine, and make excerpts or transcripts of all relevant data. In accordance with applicable regulations and law, the WDC hereby agrees to conduct an annual audit.

THE WDC HEREBY AGREES TO HAVE AN ANNUAL AUDIT CONDUCTED IN ACCORDANCE WITH the "SINGLE AUDIT AMENDMENTS ACT" and the OFFICE OF MANAGEMENT AND BUDGET (OMB) CIRCULAR NO. A-133, titled "AUDITS OF STATE, LOCAL GOVERNMENTS AND NON-PROFIT ORGANIZATIONS" AND SUBMIT A COPY OF THIS AUDIT TO THE CITY WITHIN THIRTY (30) DAYS OF COMPLETION OF SAID AUDIT.

Any deficiencies noted in any audit report(s) shall be fully cleared and remedied by the WDC within thirty (30) calendar days of the City's receipt of such audit report.

Failure of the WDC to comply with this subsection shall be deemed a material breach of this Agreement.

8. **Financial Statements.** WDC shall provide City with audited financial statements for the most recent tax year prior to the start date specified in Section II above, if applicable.

9. **Employee Verification.** All WDC records with respect to WDC employees, including, but not limited to (i) time sheets, (ii) payroll, (iii) cancelled checks, (iv) etc., shall be made available to the City at any time during normal City business hours. The City shall be entitled to interview WDC employees to verify employment information at any time during the WDC's normal business hours as often as City deems necessary.

IX. ENFORCEMENT OF THE AGREEMENT. In accordance with 24 C.F.R. §85.43, suspension or termination may occur if the WDC materially fails to comply with any term of this agreement, and further, this agreement may be terminated for convenience in accordance with 24 C.F.R. §85.44.

X. WRITTEN AGREEMENTS. If the WDC provides HOME funds to for-profit owners or developers, nonprofit owners or developers, sub-recipient, homeowners, home-buyers, tenants receiving tenant-based rental assistance or contractors, the WDC must have a written agreement which meets the requirements of 24 C.F.R. §92.504.

ADDENDUM "C"
EMERGENCY SOLUTIONS GRANTS

I. STATEMENT OF THE WORK.

A. WDC Responsibilities. The WDC shall:

1. Administer all aspects of the ESG Program for the City in a manner satisfactory to the City and to HUD and consistent with any and all relevant Federal, State and City standards required by the City and/or by HUD as a condition of providing these funds;

2. Prepare and comply with the Citizen Participation Schedule by reviewing all funding requests with the Citizen Advisory Committee;

3. Host all required public hearings;

4. Prepare the five-year Consolidated Plan along with the Annual Plan for each program year of the five year of the Consolidated Plan in accordance with HUD regulations as set forth in 24 C.F.R. §91.200, et seq. (The principal components of the Consolidated/Annual Plan consist of an assessment of the community's affordable housing needs, non-housing needs, economic development, neighborhood facilities/infrastructure improvements, and supportive social services);

5. Meet the national objectives guiding the grants and the local use of the funds therefrom, principally to benefit low and moderate-income persons by providing decent housing and fostering a suitable living environment;

6. Publicize the Consolidated Plan/Annual Plan, acquiring all required City board/commission approvals, the oversight board approval and submit the plan to HUD yearly for approval;

7. Prepare, in conjunction with the Consolidated/Annual Plan, the Environmental Review Record along with the Request for Release of Funds for all projects in the Consolidated Annual Plan;

8. Upon all funding and receipt, plan, review and administer all proposed projects. (Funds will be deposited with the City and subsequently transferred to the WDC);

9. Comply with all timeliness, procurement requirements, monitoring and Davis Bacon Wage requirements, when applicable for all proposed projects;

10. File all required reports to HUD regarding funding and project compliance (e.g. IDIS, Labor Reports, MBE reporting, and the ESG Bi-Annual Report);

11. At the completion of each program year for the five-year Consolidated Plan, prepare, review and submit the Consolidated Annual Performance and Evaluation Report (CAPER); and

12. Undertake, conduct and perform any and all such other actions, functions and/or activities which may be necessary or required to implement and comply with Federal, State and local law and HUD or State regulations relating to the ESG Program.

B. City of Waterbury Responsibilities. The City shall:

1. Remain primarily responsible to HUD for the grants and programs provided under the Funding Approval/Agreements by and between the City and HUD;

2. On a regular basis as required by Federal regulations, oversee and monitor the WDC operations and implementation of the HUD grants and programs;

3. Maintain oversight and control of the approval process for payments and disbursement of such payments as needed by the WDC; and

4. Designate and provide City personnel responsible for such oversight and monitoring.

II. PROGRAM INCOME.

A. Program Income. The WDC shall promptly remit any and all program income, if any, to the City.

III. REQUESTS FOR DISBURSEMENT OF FUNDS. WDC may not request disbursement of funds under this agreement until the funds are needed for payment of eligible costs. The amount of each request must be limited to the amount needed.

IV. REVERSION OF ASSETS. Upon the expiration of this Agreement by termination or otherwise, the WDC shall transfer to the City any ESG funds on hand at the time of expiration and any accounts receivable attributable to the use of ESG funds.

V. RECORDS AND REPORTS.

A. Documentation and Record-Keeping.

1. **Records to be Maintained.** The WDC shall maintain all records (i) required by the Federal regulations specified in such regulations as are pertinent to the grants, programs and/or activities to be funded under this Agreement, and (ii) records specified herein. Such records shall include, but not be limited to:

a. Records providing a full description of each activity undertaken;;
b. Records on matching funds, if applicable;
c. Records demonstrating that each activity undertaken meets the objectives of the pertinent grant or program;
d. Records required to determine the eligibility of activities;
e. Records required to document the acquisition, improvement, use or disposition of real property acquired or improved with grant program funds;
f. records documenting compliance with the fair housing and equal opportunity components of the pertinent grant or program; and
g. All other records necessary to document funding and project compliance with relevant law as set forth in Section I.1 hereof.

2. **Retention.** The WDC shall retain all records pertinent to the expenditures incurred under this Agreement for a period of four (4) years after the termination of all activities funded under this Agreement. Records for non-expendable property acquired with funds under this contact shall be retained for four (4) years after final disposition of such property. Records for any displaced person must be kept for four (4) years after he/she has received final payment. Notwithstanding the above, in the event of litigations, claims, audits, negotiations or other actions that involve any of the records cited and that have started before the expiration of the four (4) year period, such records shall be retained until completion of the actions and resolution of all issues, or the expiration of the four (4) year period, whichever occurs later.

3. **Client Data.** The WDC shall maintain client data demonstrating client eligibility for services provided. Such data shall include, but not be limited to, client name, address, income level or other basis for determining eligibility, and description of service provided. Such information shall be made available to the City upon request.

4. **Disclosure.** The WDC understands that client information collected under this Agreement is private and the use or disclosure of such information, when not directly connected with the administration of the City's or WDC's responsibilities with respect to services provided under this Agreement, is prohibited unless prior written consent is obtained from such person receiving service or from a responsible parent/guardian in the case of a minor receiving service or otherwise as required by applicable law.

5. **Property Records.** The WDC shall maintain real property inventory records, which clearly identify properties purchases, improved or sold. Properties retained shall continue to meet eligibility criteria and shall conform to the "changes in use" restrictions specified in applicable regulations. WDC shall further maintain records, which clearly identify any and all personal property and/or fixtures purchased, improved or sold.

6. **Close-Outs.** The WDC's obligation to the City shall not end until all close-out requirements are completed. Activities during this close-out period shall include, but are not limited to, making final payments, disposing or program assets (including the return of all unused materials, equipment, unspent cash advances, program income balances and accounts receivable to the City), and determine the custodianship of records.

7. **Audits and Inspections.** All WDC records with respect to any matters covered by this Agreement shall be made available to the City, its designee(s) or the Federal Government, at any time during normal business hours, as often as the City deems necessary , to audit, examine, and make excerpts or transcripts of all relevant data. In accordance with applicable regulations and law, the WDC hereby agrees to conduct an annual audit.

THE WDC HEREBY AGREES TO HAVE AN ANNUAL AUDIT CONDUCTED IN ACCORDANCE WITH the "SINGLE AUDIT AMENDMENTS ACT" and the OFFICE OF MANAGEMENT AND BUDGET (OMB) CIRCULAR NO. A-133, titled "AUDITS OF STATE, LOCAL GOVERNMENTS AND NON-PROFIT ORGANIZATIONS" AND SUBMIT A COPY OF THIS AUDIT TO THE CITY WITHIN THIRTY (30) DAYS OF COMPLETION OF SAID AUDIT.

Any deficiencies noted in any audit report(s) shall be fully cleared and remedied by the WDC within thirty (30) calendar days of the City's receipt of such audit report.

Failure of the WDC to comply with this subsection shall be deemed a material breach of this Agreement.

8. **Financial Statements.** WDC shall provide City with audited financial statements for the most recent tax year prior to the start date specified in Section II above, if applicable.

9. **Employee Verification.** All WDC records with respect to WDC employees, including, but not limited to (i) time sheets, (ii) payroll, (iii) cancelled checks, (iv) etc., shall be made available to the City at any time during normal City business hours. The City shall be entitled to interview WDC employees to verify

employment information at any time during the WDC's normal business hours as often as City deems necessary.

VI. ENFORCEMENT OF THE AGREEMENT. In accordance with 24 C.F.R. §85.43, suspension or termination may occur if the WDC materially fails to comply with any term of this agreement, and further, this agreement may be terminated for convenience in accordance with 24 C.F.R. §85.44.

VII. WRITTEN AGREEMENTS. If the WDC provides HOME funds to for-profit owners or developers, nonprofit owners or developers, sub-recipient, homeowners, home-buyers, tenants receiving tenant-based rental assistance or contractors, the WDC must have a written agreement which meets the requirements of 24 C.F.R. §92.504.

ADDENDUM "D"
Project Management Scope of Services

1. **Scope of Services.**

A. The WDC shall furnish all of the labor, services, reports, plans, specifications necessary for completion of the Designated Project or Designated Program as specified in a PAL and such shall be completed in a satisfactory manner, as reasonably determined by the City.

B. The WDC will provide such services through the WDC's Administrative and Project Management staff. Where the City determines that additional onsite support staff is required to address City priorities, the WDC will prepare a revised staffing proposal and obtain City approval prior to incurring costs or assigning additional staff. The WDC shall make such revisions or modifications to a PAL as may be required by the City. Revisions or modifications to a PAL required as a result of an error by the WDC will be done at the WDC's sole cost and expense.

C. The WDC shall designate a Project Manager for each Designated Project or Designated Program as the contact person between the City, Mayor's Office, Mayor's Office Staff, City Boards and WDC. The Project Manager shall perform all day to day operations, on site coordination, and decision making with regards to the project. Attendance at Board or Commission meetings or otherwise shall be by the Project Manager, or the CEO of WDC unless another individual is authorized by the City to do so.

D. In performing the services required under this Agreement, the WDC shall consult with the City's designee, as hereinafter set forth, and shall meet, as appropriate, and as directed by the City, with other City employees or officials and with other persons or entities, as necessary, including State and Federal officials and/or neighborhood groups or organizations.

2. **WDC Representations Regarding Qualification and Accreditation.** The WDC represents that, to the extent required by law, its employees are licensed to perform the Work set forth in this Agreement. The WDC further represents that its employees have the requisite skill, expertise and knowledge reasonably necessary to perform the Work required under the terms each PAL, including any supplementary work, and acknowledges that the City relies upon these representations.

A. Representations regarding Personnel. The WDC represents that it has, or will secure at its own expense, all personnel required to perform the services under this agreement. Such personnel shall not be employees of or have any

contractual relationship with the City, unless use of City employees or of personnel having a contractual relationship with the City is approved by the City in writing. As set forth above or unless otherwise provided, all the services required hereunder shall be performed by the WDC under its supervision and all personnel engaged in the work shall be fully qualified and shall be authorized or permitted under state or local law to perform such services.

B. Representations regarding Qualifications. The WDC hereby represents that, to the extent required by Federal, State and Local statutes, regulations, codes, ordinances, and policies, the WDC and/or its employees are licensed, certified, registered, or otherwise qualified, and that the WDC and all employees providing services under this Agreement, are in full compliance with those statutes, regulations and ordinances. Upon City request, the WDC shall provide to the City a copy of the WDC's and/or its employees' licenses, certifications, registrations, etc.

3. **Responsibilities of the WDC.** All data, information, etc. given by the City to the WDC and/or created by the WDC shall be treated by the WDC as proprietary to the City and confidential, unless the City agrees in writing to the contrary, and shall be used solely for the purposes of providing services under this agreement. The WDC agrees to forever hold in confidence all files, records, documents and other information, which may come into the WDC's possession during the term of this agreement, except where a disclosure is expressly stated as a requirement of this agreement. Notwithstanding the foregoing, where a WDC disclosure is required to comply with statute, regulation, or court order, the WDC shall provide prior advance written notice to the City of the need for such disclosure. The WDC agrees to properly implement the services required in the manner herein provided. If a request under the Freedom of Information Act is made to the WDC for information which is rendered by this Agreement as confidential or proprietary to the City, the WDC shall notify the City of the request, and the City thereafter shall be responsible for responding, with the cooperation of the WDC.

A. Use of City Property. To the extent the WDC is required to be on City property to render its services hereunder, the WDC shall have access to such areas of City property as the City and the WDC agree are necessary for the performance of the WDC's services under this agreement (the "Site" or the "Premises") and at such times as the City and the WDC may mutually agree. The WDC shall perform all work in full compliance with Local, State and Federal health and safety regulations. All work hereunder shall be performed in a safe manner. The WDC shall immediately correct any dangerous condition caused by or resulting from its Work. If it fails to correct, or to act diligently to correct, any condition which the City reasonably believes to be a hazard to persons or property, then immediately upon oral or written notice to any supervisory or similar personnel of the WDC, the City may, but shall not be required to, correct same at the WDC's expense. The City shall confirm in writing any oral notice given within two (2) days thereafter.

B. Working Hours. To the extent the WDC is required to be on City property to render its services hereunder, the WDC shall coordinate its schedule so that work on the Premises is performed during those hours the City sets forth in a written notice to the WDC, unless written permission is obtained from the City to work during other times. This condition shall not excuse the WDC from timely performance under the Contract. The work schedule must be agreed upon by the City and the WDC.

C. Cleaning Up. To the extent the WDC is required to be on City property to render its services hereunder, the WDC shall at all times keep the premises free from accumulation of waste materials or rubbish caused by the WDC, its employees or subcontractors, and at the completion of the work shall remove all rubbish from and about the project and all tools, scaffolding and surplus materials and shall leave the Premises "broom clean" or its equivalent, unless more exactly specified. In case of dispute, the City may remove the rubbish and charge the cost to the WDC.

D. Publicity. The WDC agrees not to deliberately disclose the fact that the City has terminated this agreement or disclose any of the terms of the agreement or use the City's name in connection with any publicity, unless the City gives prior written consent to such use of the City's name in each instance.

E. Standard of Performance. All workmanship, services, materials or equipment provided by WDC to complete a PAL, either at the Premises or intended for it, shall conform in all respects with the requirements of the applicable PAL, and shall be the best obtainable from the crafts and trades within the constraints of the PAL budget. In all cases, the services, materials, equipment, reports, plans, specifications, deliverables, workmanship, etc. shall be equal to or better than the grade specified. The standard of care and skill for all services performed by the WDC shall be that standard of care and skill ordinarily used by other members of the WDC's profession practicing under the same or similar conditions at the same time and in the same locality. The WDC's services rendered hereunder shall be rendered completely and by qualified personnel in accordance with standard industry practice.

F. Due Diligence Obligation. The WDC acknowledges its responsibilities to examine and to be thoroughly familiar with the Project and the Program Management Scope of Services, as set forth herein and each individual PAL Agreement. The WDC agrees it will perform commercially reasonable investigation of the physical items, facilities, services or functions essential to the satisfactory performance of each PAL that may be entered into pursuant to this Agreement ("Due Diligence") and hereby certifies that all such items, facilities, services or functions are included in this agreement and hereby warrants that:

(1) It will conduct Due Diligence and, accordingly, any additional costs, services or products resulting solely from the failure of the WDC to complete Due Diligence that is commercially reasonable under the nature or circumstances of a PAL shall be borne by the WDC.

(2) Its failure or omission to make investigation and verification of data shall, in no way, be cause for future claim of ignorance of such data or conditions nor shall such failure to investigate and verify be the basis for any claim whatsoever, monetary or otherwise, other than those that are not reasonably foreseeable;

(3) It is solely responsible for resolving any issues resulting from the failure to conduct Due Diligence that is commercially reasonable under the nature and or circumstances and shall assume any costs that may result during the implementation of a PAL, including, but not limited to, adherence to specifications and pricing for the Project.

(4) It is responsible for specifying any changes and disclosing any new costs. Thus, in the event any changes or costs are disclosed by the WDC, or otherwise required, during the performance of its services, the sole responsibility for any modification, delay and cost of such changes shall reside with the WDC.

(5) It will familiarize itself with the nature and extent of the Contract Documents, work anticipated by a PAL, the locality, and with all local conditions and Federal, State and Local laws, ordinances, rules and regulations that in any manner may affect cost, progress or performance of the Work;

(6) It will give the City written notice of any conflict, error or discrepancy that the WDC discovers in the documents; and

G. Reporting Requirement. The WDC shall deliver written reports upon request to the City setting forth (i) the issue date of the report, (ii) the time period covered by the report, (iii) a brief description of the work and services completed by the WDC and/or delivered by the WDC during the time period covered by the report, (iv) the WDC's declaration as to whether the entirety of the WDC's work and services required in this Agreement will be, or will not be, completed within the contract's Section 6 total compensation amount, and (v) any and all additional useful and/or relevant information. Each report shall be signed by the WDC's Chief Executive Officer.

NOTE, the WDC's failure to deliver any report required herein shall be deemed a material breach of this contract, the City hereby reserving the right to exercise all available legal remedy(ies) to address said breach.

4. **Responsibilities of the City.** Upon the City's receipt of WDC's written request, the City will provide the WDC with all documents, data and other materials reasonably necessary and appropriate to the work to be performed by the WDC under a PAL and the City will endeavor to secure, where feasible and where the City agrees it is necessary and appropriate, materials or information from other sources requested by the WDC for the purpose of carrying out the services under a PAL. The City acknowledges that the Work is advisory and collaborative in nature, that the City is responsible for the timely making of final decisions required by Exhibit B, and that completion of the work contemplated by a PAL requires reasonable cooperation from the City.

EXHIBITS

EXHIBIT A - City Ordinances
§31.269 – WDC Designation of Authority
§38.020-38.071 – Solicitation and Award Methods of Source Selection
§34.15-34.22 – Hiring of Waterbury Residents on Certain Publicly-Funded Construction Projects and as further amended from time-to-time

EXHIBIT B - U.S. Department of Housing and Urban Development
SF 424 – Certifications

EXHIBIT C - CFR Procurement Requirements
24 C.F.R. §84.40 – 84.48

EXHIBIT D - List of Current WDC Projects

EXHIBIT "A"

§31.269 – WDC Designation of Authority

§38.020-38.071 – Solicitation and Award Methods of Source Selection

§34.15-34.22 – Hiring of Waterbury Residents on Certain Publicly-Funded Construction Projects and as further amended from time-to-time

responsible for the day-to-day operation of the WDC and shall see that all actions of the Board are carried into effect.

(B) The CEO shall be knowledgeable regarding municipal economic development and housing matters and shall be hired upon specifications and qualifications set by the Board.

(C) The CEO shall, subject to the by-laws of the WDC, hire employees, staff and consultants, and purchase good and services and construction necessary for the discharge of the duties of his office and the WDC as the CEO deems necessary and/or advisable within the limits of any sums appropriated for those purposes.

(D) The CEO shall report monthly to the Board on the conduct and management of the affairs of the WDC and shall also perform such other duties as are usual and customary to this office.
(Ord. passed 3-7-2005)

§ 31.268 CONDUCT OF BUSINESS.

(A) The WDC shall keep and maintain a regular place of business within the city, which shall be open for business on a customary business schedule.

(B) The WDC shall, at all times, comply and comport itself in accordance with all applicable laws and regulations, as such may be amended, supplemented or replaced.
(Ord. passed 3-7-2005)

§ 31.269 DESIGNATIONS OF AUTHORITY.

(A) The WDC is hereby designated as the city's:

(1) Development Agency, pursuant to Conn. Gen. Stat. § 8-188;

(2) Implementing Agency, pursuant to Conn. Gen. Stat. § 32-224;

(3) Housing Site Development Agency, pursuant to Conn. Gen. Stat. § 8-216b; and

(4) Community Development Agency, pursuant to Conn. Gen. Stat. § 8-169b(c).

(B) Further, the WDC is authorized and empowered to administer, supervise, implement and control the city's:

(1) Enterprise Zone, pursuant to Conn. Gen. Stat. §§ 32-70 *et seq.* and §§ 152.02 *et seq.* of the city code; and

(2) Information Technology Zone (the "ITZ"), pursuant to Conn. Gen. Stat. § 12-65b.

(C) Other projects.

(1) Notwithstanding the provisions of Chapter 38 of the code of ordinances of the city, whenever requested by the Mayor and approved by resolution of the Board of Aldermen, on a project-by-project basis, the WDC is hereby designated, appointed and authorized to act on behalf of the city in the capacity of general contractor, project manager, construction manager, design builder, owner's representative and/or in such other similar development or construction capacity or capacities as may be designated by the Mayor and the Board of Aldermen, for purposes of city-funded construction and/or rehabilitation projects, thereby enabling the city to utilize the WDC's expertise in project design, development and/or management, without the requirement or necessity of a bid.

(2) Further, when requested by the Mayor and approved by resolutions of the Board of Aldermen and the Waterbury Board of Education, on a project-by-project basis, the WDC is hereby designated, appointed and authorized and may perform in the same capacity or capacities as set forth above for any city school construction and/or rehabilitation project.

(3) In any such project as set forth herein, the WDC shall only be allowed to collect and the city shall only be required to pay for the reasonable administrative and out-of pocket costs and expenses of the WDC's services, without the addition or inclusion of any profit. The WDC shall divulge the total estimated amount of such administrative costs and expenses for each such project to the Mayor, the Board of Aldermen and, when appropriate, the Waterbury Board of Education before such designation, appointment and/or approval is made. In furtherance of the disclosure, the WDC shall retain and make all of its books and records available for inspection by the city or its designee, before and throughout the project and for such period of time after its completion as shall be reasonably required to enable the city to comply with any federal, state and/or local law, ordinance or regulation regarding the auditing of the project.

(4) Any procurement, (as such term is defined in § 38.002 of the code of ordinances of the city) by the WDC in connection with work authorized by this section shall be conducted in accordance with the Centralized Procurement System Ordinance of the city (Chapter 38 of the Code of Ordinances of the city) and be performed by or under the direction and supervision of the City's Director of Purchasing, in his sole discretion.

(D) In accordance with such designations, appointments and authorizations, the WDC shall possess, utilize, exercise and discharge all powers and duties granted to it pursuant to the delineated and associated provisions of the state general statutes and/or the Charter and ordinances of the city, as such may be amended, supplemented or replaced, from time to time, in the best interests of the city. (Ord. passed 3-7-2005)

(3) *Cause for removal or termination of employment.* If any public official or employee of the city shall knowingly incur any obligation or shall authorize or make any expenditure in violation of this provision, the action shall be cause for removal from office or termination of employment.
(Ord. passed 6-20-2005)

§ 38.005 PREPARATION OF SPECIFICATIONS.

(A) *Generally.* In accordance with the schedule or any regulations or policies established by the Director of Purchasing, the using agency shall prepare specifications (including, but not limited to, standard terms and conditions), which shall be attached or included in the bid or proposal documents set forth herein.

(1) *Assistance to the using agencies.* The Director of Purchasing may retain or authorize the retention of expert advisors to assist the using agencies.

(2) *Maximum practicable competition.* All specifications shall seek to promote overall economy for the purposes intended and encourage competition in satisfying the city's needs, and shall not be unduly restrictive.

(3) *Specifications prepared by other than city personnel.* The requirements of this chapter regarding standards established for the specifications shall apply to all specifications prepared by city and non-city personnel, including, but not limited to, those prepared by architects, engineers and designers.

(B) *The role of the Director of Purchasing.* The Director of Purchasing shall monitor use of specifications for commodities, services and construction required by the Department of Purchases. Moreover, the Director of Purchasing, is authorized to issue regulations or policies as a means of setting standards for the preparation, maintenance and content of specifications for commodities, services and construction items required by the city.
(Ord. passed 6-20-2005)

PROCUREMENT PROCESS: SOLICITATION AND AWARD; METHODS OF SOURCE SELECTION

§ 38.020 METHODS OF SOURCE SELECTION.

Unless otherwise authorized by, the Charter of the city or this code, all contracts and purchase orders shall be awarded by one of the following methods:

(A) Competitive sealed bidding as set forth in § 38.021 of this chapter;

(B) Competitive sealed proposals as set forth in § 38.022 of this chapter;

(C) Request for qualifications as set forth in § 38.023 of this chapter. Architectural and engineering services shall be solicited as set forth in § 38.023 of this chapter;

(D) Recurring procurements as set forth in § 38.024 of this chapter;

(E) Small purchases as set forth in § 38.025 of this chapter;

(F) Sole source procurement as set forth in § 38.026 of this chapter;

(G) Emergency procurements as set forth in § 38.027 of this chapter;

(H) Waiver of bid or proposal requirement for extraordinary conditions as set forth in § 38.028 of this chapter;

(I) Exempt services are set forth in § 38.029 of this chapter;

(J) Investments or insurance as set forth in § 38.030 of this chapter; and

(K) Other methods of source selection may be established by regulation as may be promulgated by the Director of Purchasing.
(Ord. passed 6-20-2005)

§ 38.021 COMPETITIVE SEALED BIDDING.

(A) *Conditions for use.* Purchase orders or contracts, in an amount in excess of $10,000, shall be awarded by competitive sealed bidding unless the Director of Purchasing determines that an alternate method of source selection, as set forth herein and the referenced sections therein of this chapter, is appropriate.

(B) *Invitation for bids.* An invitation for bids shall be issued and shall include specifications and any other descriptions of the commodity, and all proposed and/or mandatory contractual terms, special terms and conditions applicable to the procurement, other legal and regulatory requirements, including, but not limited to, the requirements of Chapter 93 of the Code of Ordinances. With respect to any particular invitation for bids, the Director of Purchasing or the Corporation Counsel may vary any clauses that may have, prior thereto, been promulgated by the Department of Purchases for inclusion in all invitation for bids. However, the Director of Purchasing does not have the discretion to vary the specifically enumerated legal requirements of the code of ordinances.

(C) *Public notice.* Adequate public notice of the invitation for bids shall be given a reasonable time period prior to the date set forth therein for the opening of bids and in a manner that the Director of Purchasing determines will maximize public participation and competition in the competitive sealed bidding process.

(1) (a) *Generally.* The notice shall be inserted, at least ten calendar days before the final date of submitting bids, in the major daily newspaper published in the city and may, in the sole discretion of the Director of Purchasing, be posted on the Internet.

(b) *Notice following pre-qualification of bidders.* In the event of a multi-step competitive or sealed bid, the notice may be sent only to the vendors qualified to bid.

(2) (a) Each notice of a planned purchase under this chapter shall indicate the type of commodities or services to be purchased.

(b) The using agency shall provide the Director of Purchasing with special notice requirements necessary to comply with the provisions of federal or state grants, loans or reimbursement agreement, when applicable.

(D) *Bid opening.*

(1) Bids shall be opened publicly at the time and place designated in the invitation for bids. The amount of each bid, and such other relevant information as may be specified by policy adopted by the Director of Purchasing, together with the name of each bidder shall be recorded; the record and each bid shall be open to public inspection.

(2) Each bid shall be kept sealed or secured until opened publicly at the time stated in the notice soliciting the bid.

(E) *Bid acceptance and bid evaluation.* Bids shall be unconditionally accepted without alteration or correction, except as authorized in this chapter. The invitation for bid may set forth the evaluation criteria to be used. No criteria may be used in a bid evaluation that are not set forth in the invitation for bids. In the event there is no specific evaluation criterion set forth in the invitation for bids, evaluation will be based on a determination of the lowest responsible, qualified and responsive bidder as set forth in this chapter.

(1) *Evaluation criteria.* Bids shall be evaluated by the Director of Purchasing, or the using agency and/or consultants if so designated by the Director, based on the requirements set forth in the invitation for bids, which may include criteria to determine acceptability such as inspection, testing, quality, workmanship, delivery and suitability for a particular purpose.

(2) *Objectively measurable criteria.* Those criteria that will affect the bid price and be considered in evaluation for award shall be objectively measurable, such as discounts, transportation costs, and total or life cycle costs.

(F) *Correction or withdrawal of bids; cancellation of awards.* Correction or withdrawal of inadvertently erroneous bids before or after award, or cancellation of awards of contracts or purchase orders based on the bid mistakes, shall be permitted with the approval, in writing, of the Director of Purchasing. The actions of the Director of Purchasing shall take into consideration preservation of the integrity of the competitive sealed bidding process under this chapter.

(1) *Prohibited practices following bid opening.* After bid opening, no changes in bid prices or other provisions of bids prejudicial to the interest of the city or fair competition shall be permitted.

(2) *Written determination regarding cancellation of awards or contracts or purchase orders.* Except as otherwise provided by regulation and/or policy, all decisions to permit the correction or withdrawal of bids, or cancel awards of contracts or purchase orders based on bid mistakes shall be supported by a written determination made by the Director of Purchasing.

(G) *Award.*

(1) *Lowest responsible, qualified and responsive bidder.* The contract or purchase order shall be awarded with reasonable promptness by written notice to the lowest responsible, qualified and responsive bidder whose bid meets the requirements and evaluation criteria, if any, set forth in the invitation for bids, or criteria established by the Director of Purchasing.

(a) In considering past performance of a bidder for the purpose of determining the "lowest responsible, qualified and responsive bidder", the Director of Purchasing shall evaluate the skill, ability and integrity of the bidder in terms of the bidder's fulfillment of past contractual obligations and the bidder's experience or lack of experience in delivering equipment, materials, supplies or contractual services of the size or amount for which bids have been solicited.

(b) The Director of Purchasing may reject any or all bids or parts of bids or bids for any one or more commodities or contractual services, when he shall deem that the public interest will be served.

(2) *Construction project exception: permissible adjustment of the bid price.* Unless otherwise prohibited by federal or state law, regulation or agency requirement, with respect to construction projects only, the Director of Purchasing is authorized to negotiate an adjustment of the bid price, including changes in the bid requirements, with the low responsible and responsive bidder, in order to bring the bid within the amount of available funds, in the event:

(a) All bids for a construction project exceed available funds;

(b) The low responsible and responsive bid does not exceed the funds by more than 10%; and

(c) The time or economic considerations preclude re-solicitation of work of a reduced scope.

(H) *Multi-step competitive sealed bidding.* When it is considered impractical to initially issue an invitation for bid, the Director of Purchasing may issue a request for information or request for proposals (requesting technical information) or request for qualifications (requesting the qualifications of bidders) as the first step(s) in the process, to be followed by an invitation for bids which may be limited to those bidders who have been qualified under the criteria set forth in the first solicitation.
(Ord. passed 6-20-2005)

§ 38.022 COMPETITIVE SEALED PROPOSALS.

(A) *Conditions for use.*

(1) Purchase orders or contracts, in excess of $10,000, may be entered into following the issuance of competitive sealed proposals when the Director of Purchasing determines that the use of competitive sealed bidding is either not practicable or not advantageous to the city. As a general rule, the competitive sealed proposal shall be utilized for services, construction contracts and other commodities or services not susceptible to a competitive sealed bid.

(2) Professional services other than architectural and engineering are exempt from the provisions of this chapter; however, using agencies may, in the director of purchasing's discretion, utilize the competitive sealed proposal process set forth herein.

(B) *Requests for proposals.* Proposals shall be solicited through a request for proposals. As required by the Director of Purchasing, a request for information, request for qualifications or other forms of solicitation may be utilized to ascertain information, to establish qualifications, or to establish a list of those eligible to submit bids or proposals at subsequent steps in the procurement process in a manner established by the Director of Purchasing. The solicitations shall also contain, among other things, a description of the projected scope of services or system requirements, a notice of mandatory city contractual provisions or terms and conditions required by this chapter or other state or federal agencies as well as the requirements of Chapter 93 of the code of ordinances. Services shall be selected on the basis of a request for proposals. The Director of Purchasing shall establish guidelines identifying the content of requests for proposals. With respect to any particular request for proposals, the Director of Purchasing or the Corporation Counsel may vary any clauses that may have, prior thereto, been promulgated by the Department of Purchases for inclusion in all request for proposals. However, the Director of Purchasing does not have the discretion to vary the specifically enumerated legal requirements of the code of ordinances.

(C) *Public notice.* Adequate public notice of the request for proposals shall be given a reasonable time period prior to the date set forth therein for the opening of proposals and in a manner that the Director of Purchasing determines will maximize public participation and competition in the competitive sealed proposal process.

(1) The notice shall be inserted, at least ten calendar days before the final date of submitting proposals in the major daily newspaper published in the city and may, in the sole discretion of the Director of Purchasing, be posted on the Internet.

(a) *Notice following pre-qualification of offerors.* In the event of pre-qualification of offerors, the notice may be sent only to the vendors qualified to respond.

(b) *Notice; indication.* Each notice of a planned purchase under this chapter shall indicate the type of commodities or services to be purchased.

(2) The using agency shall provide the Director of Purchasing with special notice requirements necessary to comply with the provisions of federal or state grants, loans or reimbursement agreements.

(D) *Receipt of proposals; register of proposals.* Proposals shall be opened publicly at the time and place designated in the request for proposals. Proposals shall be opened and only the names of each offeror recorded so as to avoid disclosure of contents to competing offerors during the process of negotiation. A register of proposals shall be prepared in a format established by the Director of Purchasing. The register shall be open for public inspection after the award of the contract or purchase order, with the exception of confidential trade and business information withheld in accordance with the general statutes.

(E) *Evaluation factors and criteria.*

(1) The request for proposals shall state all evaluation criteria including, but not limited to:

(a) Demonstrated compliance with the design or other requirements;

(b) Offeror qualifications;

(c) Financial capacity;

(d) Project schedule;

(e) Price or life cycle price, where appropriate; and

(f) Other factors, if any.

(2) Not withstanding the aforementioned criteria, additional factors may be considered at the discretion of the Director of Purchasing prior to the opening of the proposals.

(F) *Correction or withdrawal of proposals; cancellation of awards.* Correction or withdrawal of inadvertently erroneous proposals before or after award, or cancellation of awards of contracts or purchase orders based on the mistakes, may be permitted by the Director of Purchasing, provided that, the determinations by the Director of Purchasing shall take into consideration preservation of the integrity of the competitive sealed proposal process under this chapter.

(1) *Prohibited practices following opening of proposals.* After opening the proposals, no changes in prices or other provisions of proposals prejudicial to the interest of the city or fair competition shall be permitted.

(2) *Written determination regarding cancellation of awards or contracts or purchase orders.* Except as otherwise provided by any regulation and/or policy, all decisions to permit the correction or withdrawal of proposals, or cancel awards of contracts or purchase orders based on proposal mistakes shall be supported by a written determination made by the Director of Purchasing.

(G) *Selection committee.* The Director of Purchasing or his designee shall establish a selection committee of two or more people to review responses to requests for proposals. No member of the selection committee shall have a financial interest in the transaction.

(1) *Review of responses to request for proposals.* The selection committee shall evaluate the responses to requests for proposals. The selection process may include interviews or oral presentations, with the determination of those to be invited to be interviewed or to make an oral presentation to be based on the established evaluation factors.

(2) *Recommendation.* Based on its review, the selection committee shall submit to the Director of Purchasing a list, in rank order based on the established evaluation factors, of no fewer than three firms, if possible.

(3) *Negotiation.* The Director of Purchasing, or his designee, shall negotiate a contract, including in regard to cost and scope, with the firm rated highest by the selection committee.

(4) *Failure to negotiate a contract.* Should the Director of Purchasing, or his designee, be unable to negotiate a satisfactory contract that he determines to be fair and reasonable to the city with the firm selected for negotiations in accordance with this section, the Director of Purchasing, or his designee, may then continue this process, starting with the next highest rated firm on the list established by the selection committee, until such time as a contract determined by the Director of Purchasing to be fair and reasonable to the city is negotiated or until the Director of Purchasing determines that the existing procurement process should be terminated.

(H) *Award.*

(1) *Offer most advantageous to the city.* Award shall be made by the Director of Purchasing, or his designee, to the responsible offeror whose proposal conforms to the solicitation and is determined in writing by the Purchasing Director, or his designee, to be the most advantageous to the city, in accordance with the criteria set forth in the request for proposals or other solicitation, including price and the evaluation factors.

(2) *Contents of transactional files.* The contract or purchase order files shall contain the basis on which the award is made.

(3) *Written notice of award.* Notice of the award of a contract or purchase order shall be promptly given to the successful offeror.
(Ord. passed 6-20-2005)

§ 38.023 REQUESTS FOR QUALIFICATIONS.

(A) *Policy.* The city, at the request of a using agency, may issue a request for qualifications for services for a means of prequalifying a firm prior to proceeding with a competitive seated bid as set forth

herein or a request for proposal as set forth herein. The remaining requirements hereof shall be followed for those firms that are prequalified.

(B) *Solicitation of professional service firms.* The Director of Purchasing shall, upon request of a using agency, issue a request for qualifications in order to encourage firms engaged in the lawful practice of their profession to submit a statement of qualifications and performance data. The request for qualifications shall be published in appropriate trade and professional publications in order to attain the objectives of the policies set forth in this section.

(C) *Selection Committee.* The Director of Purchasing or his designee shall establish a Selection Committee of two or more people to review responses to requests for qualifications. No member of the Selection Committee shall have a financial interest in the transaction.

(1) *Review of responses to request for qualifications.* The Selection Committee shall evaluate the responses to requests for qualifications.

(2) *Recommendation.* Based on its review, the Selection Committee shall submit to the Director of Purchasing a list, in rank order based on the evaluation factors and criteria established by the Selection Committee, of no fewer than three firms, if possible.

(3) *Services other than architectural and engineering services.* For services other than Architectural and Engineering services, upon submission to the Director of Purchasing of the list contemplated under division (C)(2) above, in lieu of the negotiations as contemplated in division (C)(4) below, invitations to bid or requests for proposals, whichever is applicable given the nature of the procurement involved, shall be sent to those appearing on the list. The successful bidder or respondent shall, thereafter, be chosen in accordance with the provisions of either § 38.022 and 38.023, whichever is applicable.

(4) *Architectural and engineering services negotiations.* It is the policy of the city to publicly announce all requirements for architectural and engineering services and to negotiate contracts for architectural or engineering services on the basis of demonstrated competence and qualifications for the type of services required and at fair and reasonable prices.

(a) With respect to the procurement of Architectural and Engineering Services costing $25,000 or more, a list of qualified firms shall be chosen as provided for in divisions (B) and (C)(1) and (2) above. Upon submission to the Director of Purchasing of the list contemplated under division (C)(2) above, the Director of Purchasing, or his designee, shall negotiate a contract with the highest qualified firm at the compensation, which the Director of Purchasing, or his designee, determines in writing to be fair and reasonable to the city.

1. *Considerations.* In preparing a decision the Director of Purchasing, or his designee, shall take into account the estimated value, the scope, the complexity and the professional nature of the services to be rendered.

2. *Failure to negotiate a contract.* Should the Director of Purchasing, or his designee, be unable to negotiate a satisfactory contract with the firm considered to be the most qualified, at a price the Director of Purchasing determines to be fair and reasonable to the city, negotiations with that firm shall be formally terminated. If negotiations are to continue, the Director of Purchasing, or his designee, shall then undertake negotiations with the second most qualified firm. Failing accord with the second most qualified firm, the Director of Purchasing, or his designee, shall formally terminate negotiations. Should the Director of Purchasing, or his designee, be unable to negotiate a contract at a fair and reasonable price with any of the selected firms, the Director of Purchasing, or his designee, shall select additional firms in order of their competence and qualifications and the Director of Purchasing, or his designee, shall continue negotiations in accordance with this section until an agreement is reached. If, at any time during this process, the Director of Purchasing determines that cancellation of the existing procurement process would be in the best interests of the city, he may do so in writing.

(b) With respect to the procurement of Architectural and Engineering Services under $25,000, all such services shall be solicited and selected in accordance with the regulations or policies promulgated by the Director of Purchasing.
(Ord. passed 6-20-2005)

§ 38.024 RECURRING PROCUREMENTS.

(A) *The blanket or consolidated procurement.* The Director of Purchasing shall, wherever appropriate, consolidate the purchase of commodities or services required by the various departments, on a recurring basis, in order to obtain competitive sealed bids or other forms of solicitation to assure the best possible prices. Upon award, the Director of Purchasing shall notify all using agencies of the blanket or consolidated procurement; which shall be valid for the fiscal year in which it was issued.

(B) *Information.* The Director of Purchasing shall circulate to all department heads the pertinent information or catalogs relative to each blanket or consolidated procurement.

(1) *Submission of recurrent commodities and services.* By May 1 of each year, each department head shall submit to the Director of Purchasing an inventory and estimated annual expenditure for commodities or services utilized, on a recurrent basis, in the customary and usual activities of the Department. Within 60 days thereafter, the Director of Purchasing shall determine whether the commodities and services fall into the category of recurrent commodities and, if so, shall solicit such recurrent commodities or services in the appropriate manner set forth in this chapter.

(2) *Issuance of purchase orders on behalf of using agencies.* Upon notice of the award of the blanket or consolidated procurement, the using agencies may submit a requisition, pursuant to § 38.003, for the purchase of the commodities or services. Each using agency shall be limited to the unexpended and unencumbered funds in their budget designated for the purchases and shall be required to file a § 38.004, an encumbrance with the Director of Purchasing.
(Ord. passed 6-20-2005)

§ 38.025 SMALL PURCHASES.

(A) *Small purchases between $2,500 and $9,999.* All procurements where the amount involved is less than $10,000, but equal to or greater than $2,500 shall be made without newspaper advertisement and without observing the procedures for the award of contracts and purchase orders.

(1) *Price alternatives.* All small purchases shall, wherever possible, be based on at least three written price alternatives from qualified bidders, as solicited by the Director of Purchasing or, at his discretion, a representative of the using agency. The notice pertaining to the solicitation shall set forth the time and place for the submission. The notice may be tendered to qualified bidders, by telephone, facsimile or electronically. A record of all notices and price alternatives shall be kept in the records of the Department of Purchases.

(2) *Award.* The Director of Purchasing shall award the purchase order to the lowest responsible bidder. If the purchase order is not given to the lowest responsible bidder, a written explanation shall be made by the Director of Purchasing and be filed as a public record with the other papers to the transaction.

(B) *Small purchases in an amount less than $2,500.* All procurements where the amount involved is less than $2,500 may be awarded on a single bid and, at the Director's discretion, accepted orally by the using agency.

(C) *Sustaining purchase orders.* Sustaining purchase orders may be issued by the Director, in his sole discretion, for the contingent needs of the various departments; but no sustaining purchase orders shall exceed the sum of $1,500.

(D) *Artificial division of procurements prohibited.* The Director of Purchasing has the authority to determine that a using agency has artificially divided procurement requirements so as to constitute a small purchase under this section and thereby prohibit the using agency from utilizing the small purchase procedures.
(Ord. passed 6-20-2005)

§ 38.026 SOLE SOURCE PROCUREMENT.

(A) *A single available source for a commodity, service or construction item.* A contract or purchase order may be awarded for a commodity, service or construction item without competition when, under this section the Director of Purchasing determines, in writing, that there is only one source for the required commodity, service or construction item.

(B) *Factors considered by the Director of Purchases.* Among the factors the Director of Purchasing may take into consideration are the following:

(1) Equipment, material, services or supplies for which there is no comparable competitive product from more than one supplier;

(2) Public utility services from natural or regulated monopolies;

(3) A component or replacement part for which there is no commercially available substitute, and which can be obtained only from the manufacturer;

(4) An item where compatibility is the overriding consideration, such as computer operating software enhancements for an existing system;

(5) Whether there is only one authorized service provider; or

(6) A used item that becomes immediately available and is subject to prior sale.
(Ord. passed 6-20-2005)

§ 38.027 PROCUREMENTS PERTAINING TO PUBLIC EMERGENCIES.

Notwithstanding any other provisions of this chapter, the Mayor may authorize the Director of Purchasing to make emergency procurements when there exists a threat to the lives, health, property, welfare or safety of the citizens of the city.

(A) *Determination of public emergency*. To so authorize the emergency procurements, the Mayor shall act in accordance with a determination of public emergency by:

(1) The President of the United States;

(2) The Governor of the state;

(3) The affirmative vote of eight members of the Board of Aldermen; or

(4) The Mayor, only upon the written advice of the Director of Health or the Superintendent of Police or Fire Chief.

(B) *Written determination*. The Mayor's authorization shall be in writing and include a determination of the basis for the public emergency and the reasons for the selection of the particular contractor. The determination shall be filed with the City Clerk for public inspection within 24 hours of the authorization and forwarded, by the City Clerk, to the Board of Aldermen and Finance and Audit Review Commission.
(Ord. passed 6-20-2005)

§ 38.028 WAIVER OF BID OR PROPOSAL REQUIREMENT: EXTRAORDINARY CONDITIONS.

(A) *Extraordinary conditions or contingencies*. Whenever a situation (that is not deemed a public emergency, as set forth in § 38.027) exists by reason of extraordinary conditions or contingencies that

could not reasonably be foreseen and guarded against (or within the purview of § 38.027 above), or because of unusual trade or market conditions, the Director of Purchasing, may, if it is in the best interest of the city, waive the competitive bid or proposal requirements set forth in §§ 38.021 and 38.022. The determination shall be based upon need and shall not be utilized in order to satisfy preferences or convenience of the using agency, for preventing funds from lapsing at the end of a fiscal year or for any reason that would circumvent the procurement methods set forth in this chapter.

(B) *Filing of an annual report.* A statement of all purchases made under the provisions of this section shall be set forth in the annual report of the Finance and Audit Review Commission.
(Ord. passed 6-20-2005)

§ 38.029 EXEMPT SERVICES.

The following shall be exempt from the competitive bid and proposal process. Using agencies may, nonetheless, elect to undertake a competitive selection process to solicit professional services which are exempt from the competitive bid and proposal process:

(A) Procurement of the services of attorneys-at-law hired by the Corporation Counsel and approved by the Mayor, in accordance with the standards set forth in § 7B-1(d)(5) of the Charter of the city;

(B) Procurement of professional services as defined in § 38.002;

(C) Procurement of architectural and engineering services where entered in compliance with § 38.023 of this chapter;

(D) Procurement of services, equipment or leases of equipment that are necessary for instruction and related services to be provided to individual students with disabilities in accordance with the requirements of the Individuals with Disabilities Act ("I.D.E.A.") and their respective regulations; and

(E) Agreements between:

(1) The city, state and/or federal governments pertaining to grants; or

(2) The city and other community based organizations, universities and other nonprofit entities participating as potential service providers in the application for a competitive grant offered by the federal or state governments.
(Ord. passed 6-20-2005)

§ 38.030 EXEMPT INVESTMENT AND INSURANCE.

Investment of city funds, including those of the pension plan, are exempt from the competitive bid and proposal process contained in this chapter, except for the selection of any investment advisors or managers who direct the investment of the funds. The placement of insurance coverage is exempt from

the competitive bid and proposal process contained in this chapter, except for the selection of the broker who places any insurance on behalf of the city.
(Ord. passed 6-20-2005)

§ 38.031 RECORD OF PROCUREMENT ACTIONS TAKEN WITH REGARD TO SOLE SOURCE, WAIVER AND EMERGENCY PROCUREMENTS.

(A) The Director of Purchasing shall maintain a record, at the Office of the Department of Purchases, listing all contracts or purchase orders made under §§ 38.026 through 38.028 pertaining to sole source, emergency and waiver purchases for a minimum of five fiscal years.

(B) The record shall contain:

(1) Each contractor's name;

(2) The amount and type of each contract or purchase order; and

(3) A listing of the commodities, services or construction procured under each contract or purchase order.
(Ord. passed 6-20-2005)

§ 38.032 FEDERAL AND STATE PROCUREMENT STANDARDS; APPLICATION FOR COMPETITIVE GRANTS.

Notwithstanding the requirements of this chapter, all procurements that include funding by federal or state funds, including the application for competitive grants, shall comply with the procurement and legal requirements of the federal or state laws or regulations.
(Ord. passed 6-20-2005)

§ 38.033 FEDERAL PROCUREMENT SUBJECT TO SECTION 3.

(A) Whenever a recipient receives HUD housing or community development program funds for a project in excess of $200,000, any contractor or subcontractor procured under this chapter for work on such project for a contract in excess of $100,000, shall comply with the city's Section 3 Policy. The Section 3 Policy shall apply to every contractor or subcontractor meeting the $100,000 threshold.

(B) The city shall notify all potential contractors and subcontractors of the Section 3 Policy by including a copy of, or information from, the Section 3 Policy in any request for proposal, bid package and/or contract associated with a Section 3 project. A copy of the Section 3 Policy shall also be made

available for review and inspection at the following locations: City Clerk's Office, 235 Grand Street, Waterbury, CT; City of Waterbury Purchasing Department, 235 Grand Street, Waterbury, CT and Waterbury Development Corporation, 24 Leavenworth Street, Waterbury, CT; as well as on the Purchasing Department website: http://www.waterburyct.org/content/458/930/933.aspx and the Waterbury Development Corporation website: http://www.wdconline.org.
(Ord. passed 2-21-2012)

CANCELLATION OF INVITATIONS FOR BIDS OR REQUEST FOR PROPOSALS

§ 38.045 CANCELLATION OF INVITATION FOR BIDS OR REQUESTS FOR PROPOSALS; WAIVER OF MINOR IRREGULARITIES.

(A) *Cancellation.* The Director of Purchasing may:

(1) Cancel an invitation for bids, a request for proposals or other solicitation; or

(2) Reject any or all bids or proposals, in whole or in part, as may be specified in the invitation for bids, request for proposals, or other solicitation, when he deems it in the best interest of the city, in

accordance with regulations and/or policies, if any. The Director shall set forth his reasons, in writing, which shall be part of the contract file. No written determination shall be required for the cancellation of an entire invitation for bid or request for proposals.

(B) *Waiver of minor irregularities.* The Director of Purchasing may waive minor irregularities in bids and proposals if he determines that such a waiver would be in the best interest of the city. The Director of Purchasing shall state the reasons for any such waiver in writing and include such statement in the contract file.
(Ord. passed 6-20-2005)

QUALIFICATIONS AND DUTIES

§ 38.046 RESPONSIBILITY OF BIDDERS AND OFFERORS.

(A) *Determination of nonresponsibility.* The Director of Purchasing shall make a determination of nonresponsibility of a bidder or offeror. The unreasonable failure of a bidder or offeror to promptly supply information in connection with an inquiry with respect to responsibility may be grounds for a determination of nonresponsibility with respect to the bidder or offeror. The Director of Purchasing may seek the advice of the using agency and the consultants, if any. If requested by the bidder or offeror deemed nonresponsible the Director of Purchasing may provide a written determination.

(B) *Right of nondisclosure.* To the extent permitted by the state general statutes, confidential information furnished by a bidder or offeror pursuant to this chapter shall not be disclosed outside of the Department of Purchases without prior written consent by the bidder or offeror.
(Ord. passed 6-20-2005)

§ 38.047 PREQUALIFICATION OF SUPPLIERS.

As set forth herein, prospective suppliers may be prequalified for particular types of commodities, services and construction. The Director of Purchasing shall determine the method of submitting prequalification information and the information required in order to be prequalified.
(Ord. passed 6-20-2005)

§ 38.048 SUBSTANTIATION OF OFFERED PRICES.

The Director of Purchasing may request factual information reasonably available to the bidder or offeror to substantiate that the price or cost offered, or some portion of it, is reasonable.
(Ord. passed 6-20-2005)

§ 38.049 PREFERENCE FOR BIDDERS AND OFFERORS LOCATED IN THE CITY.

A preference shall be given to a qualified bidder or offeror whose business is located in the city whose bid or proposal falls within 2% of the lowest bid or the preferred proposal. Notwithstanding the foregoing, the 2% preference shall not apply when the bid or proposal exceeds the amount of $20,000 over the lowest qualified bid or preferred proposal. This provision shall apply to commodities or services that are funded entirely by the city general or capital funds.
(Ord. passed 6-20-2005)

§ 38.050 REPORTING OF ANTI-COMPETITIVE PRACTICES.

When for any reason collusion or other anticompetitive practices are suspected among any bidders or offerors, a notice of the relevant facts shall be transmitted to the Corporation Counsel who shall refer the matter to the Attorney General of the State of Connecticut.
(Ord. passed 6-20-2005)

DETERMINATIONS

§ 38.051 RETENTION OF PROCUREMENT RECORDS.

All procurement records shall be retained and disposed of in accordance with the records retention guidelines established by the laws of the State of Connecticut.
(Ord. passed 6-20-2005)

§ 38.052 FINALITY OF DETERMINATIONS.

The determinations of the Director of Purchasing required by the following sections are final and conclusive:

(A) Section 38.069(D) (Contracts: Sale, Lease or Rental of City Property);

(B) Section 38.021(F) (Competitive Sealed Bidding — Correction or Withdrawal of Bids; Cancellation of Awards);

(C) Section 38.022(A) (Competitive Sealed Proposals — Conditions for Use);

(D) Section 38.022(H) (Competitive Sealed Proposals — Award);

(E) Section 38.023 (Requests for Qualifications);

(F) Section 38.024 (Recurring Procurements);

(G) Section 38.025 (Small Purchases);

(H) Section 38.026 (Sole Source Procurement);

(I) Section 38.027 (Procurements Pertaining to Public Emergencies);

(J) Section 38.028 (Waiver of Bid or Proposal Requirements);

(K) Section 38.029 (Exempt Services);

(L) Section 38.032 (Federal and State Procurement Standards);

(M) Section 38.046(A) (Responsibility of Bidders and Offerors — Determination of Nonresponsibility);

(N) Section 38.048 (Substantiation of Offered Prices);

(O) Section 38.049 (Preference for Bidders and Offerors Located in the City); and

(P) Section 38.067 (Contractor Accounting Requirements).
(Ord. passed 6-20-2005)

CONTRACTS AND PURCHASE ORDERS

§ 38.065 OBLIGATIONS OF PERSONS SEEKING A CONTRACT OR PURCHASE ORDER WITH THE CITY; AFFIDAVITS, DISCLOSURES AND ENCUMBRANCES.

(A) (1) No contract, regardless of how procured, shall be awarded by the city to any person until the following documents have been received by the city:

(a) An affidavit of the person that the person, or affiliated entity, has no delinquent taxes or other financial obligation owed to the city; and

(b) Disclosures as required by Chapter 39 this code.

(2) The affidavits and disclosures, if not submitted as part of competitive bid provisions, shall be obtained by the city agency or official seeking the contract.

(B) No contract, regardless of how procured, shall be awarded by the city to any person until a certification has been obtained from the Tax Collector for the city that the person or any affiliated entity, either directly or through a lease, has no back taxes.

(C) No purchase order shall be awarded;

(1) In the event it has been determined that a bidder, offeror or any affiliated entity, either directly or through a lease, owes back taxes to the city; and/or

(2) In the event it has been determined that the bidder, offeror or any affiliated entity has not filed a current list of taxable personal property as required by the general statutes; unless it is otherwise certified that the person is not required to file the list.
(Ord. passed 6-20-2005)

§ 38.066 DISCLOSURES REQUIRED BY THE FEDERAL OR STATE GOVERNMENTS.

In addition to the foregoing, no contract or purchase order shall be awarded by the city to any person, until all affidavits, disclosures and certifications required by the federal or state governments have been executed and delivered as required.
(Ord. passed 6-20-2005)

§ 38.067 CONTRACTOR ACCOUNTING REQUIREMENTS.

The city may require contractors to submit appropriate documentation prior to the award of contracts or purchase orders in which the city agrees to reimburse costs, confirming that:

(A) The proposed contractor's accounting system will permit timely development of all necessary cost data in the form required by the specific contract type contemplated; and

(B) The proposed contractor's accounting system is adequate to allocate costs, if required, in accordance with generally accepted accounting principles.
(Ord. passed 6-20-2005)

§ 38.068 PURCHASE ORDERS; WHEN REQUIRED.

Purchase orders shall be required for all commodities regardless of the amount, unless the Director of Purchasing determines that a contract is necessary. All agreements for services and professional services in an amount less than $50,000 shall be documented by purchase order, unless the scope of services requires the utilization of a contract, as determined by the Director of Purchasing following consultation with the Corporation Counsel.
(Ord. passed 6-20-2005)

§ 38.069 CONTRACTS; WHEN REQUIRED.

(A) *When required.* Contracts shall be required for leases (or other real estate agreements) and for all services and professional services in the amount of $50,000 or more.

(B) *Grants with the federal or state government.*

(1) *Required documentation.* All grants with the federal or state government, otherwise exempt from certain provisions of this chapter, shall be documented in writing and executed as set forth in § 38.072.

(2) *Required review.* All federal or state government grant requests and applications other than those for the Board of Education shall be reviewed by the Office of the City's Budget Director prior to submission.

(3) *Required approvals.* All grant applications and contracts may be subject to approval by the Board of Aldermen if required by federal or state law or as may be otherwise set forth in this code. Notwithstanding the exemption of grants from any other provisions of this Chapter 38, the city will not execute a written agreement pertaining to grants that require matching funds by the city, unless approved by the Board of Aldermen.

(C) *Grants with other agencies.*

(1) *Required documentation.* All grants with agencies other than the federal or state government (other agencies), which are otherwise exempt from certain provisions of this chapter, shall be documented in writing and executed as set forth in § 38.072.

(2) *Required review.* All other agencies grant requests and applications shall be reviewed by the Office of the City's Budget Director prior to submission.

(3) *Required approvals.* All other agencies grant contracts shall be subject to review and approval of the Director of Finance and Corporation Counsel. Notwithstanding the exemption of grants from any other provisions of this Chapter 38, the city will not execute a written agreement pertaining to grants that require matching funds by the city, unless approved by the Board of Aldermen.

(D) *Sale, lease or rental of city property.* Rental, lease, purchase and lease/purchase agreements shall be subject to the requirements of this chapter for competition. The Director of Purchasing shall determine the method of selection and issue a written determination relating thereto. The forgoing notwithstanding, any agreement to transfer or dispose of any city held interest in real property is subject to the following requirements.

(1) The Director of Purchasing shall instruct the City Planner to compile and maintain a list of all real property in which the city may have an interest which, in the opinion of the City Planner, are

eligible for transfer or disposition by the city. The list shall, for each interest in real property appearing thereon, include a description of any conditions to which any such transfer or disposition must be subject in order to ensure the property's use in compliance with any city plan, neighborhood revitalization plan or other similar plan or plans, (as that term is defined under applicable laws, statutes and ordinances), which may have been adopted by, or is otherwise in effect, at the time of the transfer or disposition. The City Planner shall make determinations as to the ownership of any such real property in which the city is suspected to have an interest only after consultation with the Corporation Counsel.

(2) Any such transfer or disposition must first be requested in writing by, or recommended in writing by, the using agency, if any, having direct control over the interest in, real property prior to its transfer or disposition and the City's Property Manager (as designated by the Director of Finance). If any such request or recommendation is made by the Property Manager without identifying a using agency having direct control over the interest, the Property Manager's request or recommendation shall state the reasons for concluding that no using agency is identifiable. If a request or recommendation for such a transfer or disposition is made by a using agency, then the request or recommendation must be forwarded to the Property Manager for approval of the transfer or disposition prior to initiating further proceedings to effectuate the transfer or disposition.

(3) The city may entertain requests for transfer or disposition of any interest in real property from members of the general public and the requests shall be directed to the Property Manager. Upon receipt of such a request by the Property Manager, the Property Manager shall have the discretion to refuse to process the request. Any refusal to process the request shall, upon the request of any interested party, be subject to review by the Board of Aldermen and, upon a simple majority vote thereof, may be overridden.

(4) If a request for transfer or disposition as contemplated under division (D)(3) above is received and a decision to process the same is made, either by the Property Manager or by the Board of Aldermen subsequent to a review of a refusal by the Property Manager, the Property Manager must then determine which using agency has direct control over the interest in real property and obtain the using agency's written approval of the transfer or disposition. If no such using agency can be identified, the Property Manager shall state in writing the reasons for concluding that no using agency is identifiable.

(5) Prior to approving any transfer or disposition, the Property Manager shall be responsible for assuring that the interest in real property sought to be transferred or disposed of appears upon the aforementioned list prepared by the City Planner. If the interest does not appear on the list, then the Property Manager must obtain written authorization for the City Planner for the transfer or disposition. The City Planner's authorization must also state any and all conditions, as mentioned in division (D)(1) above, to which any such transfer or disposition must be subject or state that no such conditions exist.

(6) After obtaining any and all approvals as may be required pursuant to divisions (D)(1) through (5) above, the Property Manager shall, subject to the approval of the Purchasing Director, choose the method of solicitation of bids to be used relative to the given transfer or disposition.

Thereafter, and after consultation with the Director of Purchasing and the Corporation Counsel, the Property Manager shall prepare any required solicitation documents relative to the transfer and disposition of the interest in real property in question. The documents shall include, amongst other things, any relevant selection criteria as recommended by the Director of Purchasing. Upon the completion of the solicitation documents, they shall be presented by the Property Manager to the Director of Purchasing for final approval. The Director of Purchasing shall, thereafter and after consultation with the Corporation Counsel, either approve or reject such solicitation documents. In the event that the documents are rejected the Director of Purchasing shall, by any reasonable means, inform the Property Manager of the perceived deficiencies and of the Director of Purchasing's recommendations for curing the same. Upon curing any such deficiencies, the solicitation documents shall be resubmitted to the Director of Purchasing for approval. Upon ultimate approval of the solicitation documents, the Director of Purchasing shall provide written notice thereof to the Property Manager and to the Corporation Counsel. After the approval by the Director of Purchasing, the Director of Purchasing shall advertise such solicitation or provide such other notice of the proposed transfer or disposition as he deems appropriate under the solicitation method being employed. Any approvals given by, or actions taken by, the Director of Purchasing under this division (D)(6) shall be given or taken in a manner which the Director of Purchasing reasonably deems to be consistent with the principles of competition which are applicable to the solicitation of procurements under this chapter and any restrictions or exceptions provided for in relation to effectuating the principles hereunder.

(7) Upon the receipt of responses to any solicitation as contemplated in division (D)(6) above, the Director of Purchasing shall open them in a manner the Director deems to be consistent with the provisions applicable to the solicitation of procurements under this chapter and shall, thereafter establish a committee to review the same. The committee shall consist of, at a minimum, the Director of Purchasing the Property Manager and the Chief Executive Officer of the Waterbury Development Corporation or his designee. The Mayor may, however, elect to participate on the committee, or to appoint a designee to do so in his stead, if the Mayor deems it to be in the city's best interest to do so. The committee shall either reject all bids or choose one bidder as the successful bidder based upon the selection criteria identified in the solicitation documents.

(8) The Property Manager shall prepare a recommendation to award a contract for the transfer or disposition in question to the successful bidder chosen as contemplated under division (D)(7) above. The Property Manager shall submit the recommendation to the City Plan Commission for a report pursuant to Conn. Gen. Stat. § 8-24, as the same shall be amended from time to time. The Property Manager shall, after a failure of the City Plan Commission to act within the requisite statutory time period or upon issuance of a report by the City Plan Commission, submit the recommendation, and a copy of any related City Plan Commission report, to the Board of Aldermen for action pursuant to the applicable provisions of the Charter of the city as same may be amended from time to time.

(9) The Property Manager shall be responsible for providing the Board of Aldermen, with any and all information required, including evidence of value if applicable and copies of all bids or responses received by the city in pursuant to the solicitation of the bids or responses relative to any given property,

to evaluate and take action on any such recommendation. The Property Manager shall, furthermore, be responsible for obtaining any and all appraisals for properties for which, in the Board's opinion as evidenced by resolution of the Board, a transfer or disposition may be subject to referendum pursuant to the applicable provisions of the Charter of the city, as same may be amended from time to time.

(10) No such transfer or disposition as governed by this section shall be effectuated without the terms thereof having first been included in a contract executed by the city and the successful bidder. Such contract shall be in a form as provided by the Corporation Counsel and shall be subject to any and all other legal requirements relating to approvals of contracts to which the city is a party including approval requirements contained in any applicable state statute, the Charter of the city, this chapter and any other applicable provisions of the code of ordinances.

(11) Any assignment by the city of any liens it may own, as may be authorized pursuant to the state general statutes, shall be exempt from the provisions of this chapter and shall be governed by the applicable state statutory provisions. Nothing herein, however, shall prohibit compliance with any provisions of this chapter in relation to any such assignment if doing so would be in city's best interest. (Ord. passed 6-20-2005)

§ 38.070 EXCEPTIONS.

(A) Notwithstanding the requirements of §§ 38.068 and 38.069, neither a purchase order or a contract shall be required for the following:

(1) Natural gas or electric utilities;

(2) City employee expense reimbursements;

(3) Inter-city department charges; or

(4) Other expenditures at the discretion of the Director of Purchasing.

(B) The encumbrance of funds requirements of § 38.004 of this chapter apply to this section. (Ord. passed 6-20-2005)

§ 38.071 ISSUANCE OF PURCHASE ORDERS.

(A) *Issuance by the Director of Purchasing.* Requisitions by the using agency for the purchase of all commodities regardless of the amount and services under $50,000 shall be reviewed, encumbered and approved by the Budget Director and processed by the Purchasing Department prior to the issuance of a purchase order. In order to meet finance system requirements, purchase orders shall be issued for each contract. In such cases, contract language shall govern over purchase order language.

(B) *Required contents.* A purchase order shall not be complete without inclusion of terms and conditions approved by the Office of the Corporation Counsel, special terms and conditions required by federal and state government funding sources and the identity of the personnel of the using agency responsible for the administration of the transaction covered by the purchase order. Further, the Director of Purchasing shall review, with the consultation of the Corporation Counsel, if deemed necessary, the insurance and bond requirements in order to ascertain compliance with the standards set by the Director of Finance or his designee.
(Ord. passed 6-20-2005)

§ 38.072 EXECUTION OF CONTRACTS.

(A) *Execution by the Mayor.* The Mayor, on behalf of and in the name of the city, shall execute all contracts made by the city.

(B) *Role of the Corporation Counsel.* Upon award of a contract by the Director of Purchasing, the Corporation Counsel or an attorney acting under the authority of the Corporation Counsel shall approve all contracts, both as to form and compliance with all legal requirements of the Charter. In addition to such other legal requirements as may be examined by the Corporation Counsel, a contract shall not be deemed to comply with the legal requirements of the Charter if the Corporation Counsel determines that satisfactory proof of the availability of unexpended, appropriated funds does not exist or if the file does not include each of the following:

(1) A recitation, by the using agency, of the amount of funds to be expended by the terms of the contract, including, but not limited to, a breakdown of funds in each fiscal year of a multi-year transaction, including an estimate of capital funds in subsequent years;

(2) The special terms and conditions required by federal and state government funding sources and the identity of the personnel of the using agency responsible for the administration of the transaction covered by the contract; and

(3) The Corporation Counsel shall review the vendor-submitted insurance and bonds in order to ascertain compliance with the standards set by the Director of Finance or his designee.

(C) *Approval by the Board of Aldermen.* The following shall be subject to Board of Aldermen approval:

(1) All contracts with the exception of contracts for services which are the subject of an exemption hereunder in excess of $50,000;

(2) Any multi-year contract, accompanied by appropriate explanatory information prepared by the Director of Purchasing,

HIRING OF WATERBURY RESIDENTS ON CERTAIN PUBLICLY-FUNDED CONSTRUCTION PROJECTS

§ 34.15 PURPOSE.

The purpose of this subchapter is to increase the benefit to the City of Waterbury and its residents from the city's investment of public funds in certain publicly-funded construction projects to allow the city to recognize, as a benefit of such investment, a reduction in the amount of poverty and unemployment that would otherwise exist amongst its residents and also to help reduce the economic burden that would otherwise be placed on the city in having to provide alternative assistance to those residents who, but for their being hired pursuant to the provisions of this ordinance, would remain unemployed.
(Ord. passed 2-21-2012)

§ 34.16 FINDINGS.

The City of Waterbury finds that a substantial number of city residents are not being employed by contractors performing work on publicly-funded construction projects in the City of Waterbury and that the residents, therefor, are not receiving the maximum possible benefit from the City of Waterbury's investment of public funds in the projects. The city further finds that:

(A) Recent research of hiring patterns on construction projects reveals a pattern of low hiring of residents in favor of nonresidents whose hiring is draining significant resources from the city.

(1) Only 14% of work hours performed on the construction of the $138,000,000 waste water treatment plant in 1998 - 1999 were performed by residents;

(2) Only 10% of laborers hours on city street paving in 1999 were performed by residents;

(3) With an average wage of $21 per hour on tax-funded city construction work as exemplified by the waste water treatment plant construction project, more than $13,000,000 in wages was lost by city residents on that project. Due to typical turnover of those funds among businesses in the community, $13,000,000 - $26,000,000 of additional economic activity from the multiplier affect was lost to city businesses;

(4) As a result of the high percentage of noncity residents on construction projects, fewer Waterbury residents are able to be home owners, thus reducing property taxes to the city. For each resident who loses the opportunity to be a home owner, the city loses an estimated $2,000 in revenue per year.

(5) The migration of benefits caused by the high percentage of noncity residents on construction projects increases the burden on health care providers to provide uncompensated care to Waterbury residents without health insurance. Over the course of the waste water treatment plant project alone, for example, $5,000,000 in health and pension benefits were lost to city residents. If this subchapter were minimally met, it would double the wages and benefits going to city residents; and

(6) The extra cost to tax payers of the under-usage of apprentices on the project compared to what is permissible under state law is estimated at close to $1,000,000.

(B) Waterbury residents face higher rates of unemployment than other towns and cities in the region and state.

(1) The unemployment rate among construction workers who are residents of the city is 50% higher than the statewide unemployment rate among construction workers, and more than double the unemployment rate among construction workers in similarly-sized cities. For example, the Connecticut Department of Labor reports that in September 1999, 324 city residents applied for construction jobs at unemployment offices out of a total construction workforce of 3,600 (9%). Statewide, 3,908 applicants applied out of a total construction labor force of 63,800 (6%). In Danbury, 166 city residents applied out of a total construction workforce of 4,100 (4%).

(2) Since 1984 the city's unemployment rate has been consistently higher than the rate of unemployment in the Naugatuck Valley region and the state. Unemployment is especially severe in some neighborhoods, which faced up to 19% unemployment, compared to the city's 8% unemployment in the 1990 Census.

(C) Poverty is much greater and incomes are much lower in Waterbury than elsewhere in the region and state.

(1) According to the 1990 Census, 12.1% of the city's residents lived below the poverty level, compared to 2.7% in the rest of the region and 6.8% statewide.

(2) Median 1990 household income was $30,533 in Waterbury compared to $41,721 for the state, and compared to $45,000 - $67,500 for towns in the rest of the Naugatuck Valley region. Estimates updating this data to 1997 show little change. Residents on average earn $10,000 less per capita than the statewide average of $28,000.

(3) Poverty is even more pronounced in some neighborhoods with up to 30% of their residents in poverty.

(4) The average wage for residents coming off of welfare in the city is one of the lowest in the State of Connecticut at $5.93 per hour.

(5) Over one-third of female headed households are under poverty.

(6) City children are among the poorest in the State of Connecticut, 61% of students city-wide are eligible for reduced price meals versus 25% statewide.
(Ord. passed 2-21-2012)

§ 34.17 DEFINITIONS.

For the purpose of this subchapter, the following definitions shall apply unless the context clearly indicates or requires a different meaning.

ADMINISTRATOR. The person(s), city department or agency designated by the Mayor of the city with the responsibility of overseeing the implementation and enforcement of this subchapter.

APPRENTICE. Any person currently enrolled in, or who has completed, either an apprenticeship program that complies with the Apprenticeship Standards adopted by the Connecticut State Apprenticeship Council, a training program administered by or on behalf of a legally organized labor union, or a state approved standardized craft training program.

CITY. The City of Waterbury, Connecticut.

CITY FUNDS. Funds originating within the city pursuant to the city's taxing powers or authority to raise money through the sale of public bonds, permit tax abatements and enter into tax fixing agreements and tax increment financing agreements.

CONSTRUCTION. The process of building, altering, repairing, improving or demolishing any public infrastructure facility, including any public structure, public building or other public improvements of any kind to city property or other property or space in which the city has an interest. It does not include the routine operation, routine repair or routine maintenance of any existing public infrastructure facility, including structures, buildings or real property.

CONSTRUCTION PROJECT. Any project for which the primary purpose involves construction, as defined above, deconstruction, the remediation of any hazardous materials as defined in the Connecticut General Statutes, the rehabilitation or renovation of any structure or the creation, extension, reconstruction, reconditioning or rebuilding of any portion of a municipal infrastructure or public utility system.

CONTRACTOR. Any person hired by the city, directly or indirectly through an owner, to perform construction work on covered projects, including subcontractors hired by general contractors.

COVERED PROJECT. Any construction project taking place in the city with a value of $500,000 or greater, funded in whole or in part by city funds or funds administered by the city in accordance with federal or state grant or loan programs or any other federal or state programs pursuant to which the city is funding, in whole or in part, the project. This definition of ***COVERED PROJECT*** shall include funds derived from the aforementioned federal or state grant, loan or other programs only to the extent permitted by federal and state law. The value of the projects shall equal the total consideration to be paid to all contractors stated in each contract pursuant to which contractors are performing construction work on covered projects.

FIRST-SOURCE REFERRAL PROGRAM. A program whose purpose includes but is not limited to, job training and the referral of qualified residents to contractors. The ***FIRST-SOURCE REFERRAL PROGRAM*** shall use the Good Jobs! umbrella coalition of community groups and churches as a priority source for recruitment.

GOOD JOBS ADMINISTRATION BUDGET. The amount of funding required to oversee the implementation and enforcement of this subchapter in a given fiscal year.

HIRING GOAL. The 30% of the total worker hours on each covered project shall be performed by residents. At least 25% of construction trade jobs shall go to apprentices. At least 70% of all "new hires" (those workers hired by a contractor on a project, other than existing employees and those referred by union hiring halls with prior seniority in the case of a union job) shall be "economically disadvantaged" individuals, defined as those earning less than 150% of the poverty line at the time of application. A minimum of 5% of the construction workforce labor hours will be local resident, minority artisans. A minimum of 5% of the construction workforce labor hours will be women. A minimum of 10% of the total work hours shall be allocated for minorities. Contractors are expected to employ a workforce that represents the population of the city.

LIAISON COMMITTEE. The committee established by the Board of Aldermen to monitor compliance with the provisions of this subchapter, and make recommendations to the Administrator and the Board of Aldermen regarding enforcement. The committee shall convene monthly in a space open to the public. The committee shall be comprised of two representatives of the Board of Aldermen one to be appointed by the President of the Board of Aldermen and one to be appointed by the Minority Leader on the Board of Aldermen, one representative from the Board of Education to be appointed by the President of the Board of Education, one representative of the Workforce Development Board, and seven representatives who are appointed by the Board of Aldermen from a list of three nominees submitted by each of the following interested parties: one contractor, one union, one civil rights group, one community and one Human Rights Commission. The committee members shall serve for a term of two years, and this nomination and selection process shall be used to fill any vacancy.

NEW HIRE. Those workers hired by a contractor on a project, other than existing employees, and those referred by union hiring halls with prior seniority in the case of a union job.

OWNER. The person who enters into a contract with a contractor for work on a covered project other than the city.

PERSON. An individual or a company, partnership, foreign or domestic corporation, partnership, limited liability company or other business entity.

RESIDENT. Any person whose domicile is the City of Waterbury, Connecticut.

ROUTINE MAINTENANCE. Simple, small-scale activities (usually requiring only minimal skills or training) planned and performed at regular intervals and being necessary to (1) extend the life of, or to delay or prevent the premature failure of, any plant or system or of any structure or structural system, building component or equipment; or (2) protect against normal wear and tear; or (3) maintain a suitable aesthetic appearance. Examples of ***ROUTINE MAINTENANCE*** may include, but are not limited to, lawn or grass cutting, hedge trimming, painting, caulking, sealing, plumbing or electrical repairs, carpet cleaning or other cleaning performed at regular intervals.
(Ord. passed 2-21-2012)

§ 34.18 HIRING GOAL AND IMPLEMENTATION.

(A) All contractors performing work on covered projects shall make good faith efforts to satisfy the hiring goal.

(B) Any contractors that fail to meet the hiring goal shall be required to demonstrate to the Administrator's satisfaction that the contractor made good faith efforts to meet the hiring goal.

(C) (1) The Mayor of the city shall appoint an Administrator annually no later than June 30th to serve as the Administrator for the city's fiscal year following such appointment or within 30 days of a vacancy that might arise during any fiscal year. The foregoing not withstanding, an incumbent Administrator shall serve until their successor has been appointed and qualified. If, in the event of a vacancy, the Mayor fails to appoint a replacement Administrator within the first 30 days following the effective date of that vacancy, then the Board of Aldermen shall have the power to fill the vacancy provided that the Board does so:

(a) Within 30 days from the date upon which the power to make the appointment vested in the Board; or

(b) Prior to May 31st if the power to make the appointment vests in the Board on or after May 1st.

(2) Should the Board fail to make the appointment during any 30 day period it has to do so, or prior to May 31st if the power to make the appointment vests in the Board on or after May 1st, then

the power of appointment shall revert to the Mayor. Thereafter, throughout the remainder of the then current fiscal year, the power to make the appointment shall alternate between the Mayor and the Board, at 30 day intervals, until an appointment is made or until June 1st at which point in time the power to make the appointment shall vest in the Mayor.

(D) The Mayor shall annually, prior to the adoption of the city's budget for the then next fiscal year and after consultation with the Administrator and all relevant city department heads, establish a Good Jobs Administration Budget for the then next fiscal year and the Mayor shall include a line item in his annual budget submission to the Board of Aldermen sufficient to fund the Good Jobs Administration Budget. If, during the fiscal year in which the Mayor submits a given Good Jobs Administration Budget as part of his budget submission, the city has retained as liquidated damages, pursuant to its contracts for covered projects, an amount greater than or equal to the Good Jobs Administration Budget as then submitted by the Mayor, the city shall be required to fund the Good Jobs Administration Budget as submitted by the Mayor.
(Ord. passed 2-21-2012)

§ 34.19 REFERRAL MECHANISM.

(A) Prior to the commencement of construction on covered projects, the Administrator shall find out from the contractor the number of job positions to be created by the project by trade and the qualifications by job title. The Administrator shall also ensure that adequate job training is available to the extent necessary to achieve the hiring goal and that screening and referral mechanisms are in place so that contractors can access qualified residents. Additionally, the Administrator shall designate a first-source referral program for the city.

(B) In the event a contractor cannot satisfy the hiring goal through its own employees and union hiring halls, the contractor shall next utilize the first source referral program in order to satisfy the hiring goal. The contractor must wait five business days after a request has been submitted before advertising the position elsewhere.

(C) Qualifications required shall be only those relevant to the job. In satisfying the hiring goal, the contractor shall employ all qualified persons referred by the first source referral program. The contractor must utilize the first source referral program whenever its hiring needs increase and they are unable to comply with the hiring goals.
(Ord. passed 2-21-2012)

§ 34.20 MONITORING.

(A) The owner for a covered project shall require all construction contracts to comply with all provisions of this subchapter, and a copy of this subchapter shall be included with all contracts with

contractors performing construction work on covered projects. The subchapter must be a contractual obligation in all contracts.

(B) All contractors performing construction work on covered projects shall submit to the Administrator weekly certified payroll records within five working days of the end of each payroll period. The records must show the person-hours on a craft-by-craft basis and identify the address, social security number, hiring date, ethnicity, gender and trade (journeyperson or apprentice) of all employees on the project. All reports must have an original signature and be signed by an authorized officer or employee of the company. Failure to comply with the provisions of this division (B) may be deemed by the Administrator to be a violation of this subchapter. Any willful misrepresentation contained in the information requested pursuant to this division (B) shall be deemed by the Administrator to be a violation of this subchapter. Unless prohibited by federal, state or local law, all records in the city's possession shall be available for public inspection.

(C) The Administrator shall review all information provided pursuant to division (B) hereof and submit monthly reports to the Liaison Committee and to the Board of Aldermen summarizing the information.
(Ord. passed 2-21-2012)

§ 34.21 GOOD FAITH EFFORTS.

(A) Contractors shall be deemed to have made good faith efforts if they demonstrate to the satisfaction of the Administrator that they have done all of the following:

(1) Utilize the first source referral program to help satisfy the hiring goal;

(2) Notify the public in the city of the employment opportunities available on covered projects. The notification shall comprise a notice in a newspaper of general circulation in the city of employment opportunities, written notice to construction unions, community organizations and city high schools concerning same, and any other notice required by the Administrator. Contractors shall maintain records of responses to the notices received thereby. All notices must state that all qualified applicants will receive consideration without regard to race, color, religion, sex or national origin. The notice required by this division shall include a statement that the notice is provided pursuant to this subchapter;

(3) Maintain a file on the job site of the names and addresses of each worker referred by the first source referral program. The file shall indicate what action was taken with respect to each referred person, and if the person was not hired, the reasons therefore; provided, however, that this subchapter shall not be construed as requiring contractors to hire any persons who do not satisfy applicable job qualifications;

(4) Participate in State of Connecticut-approved local employment training programs in the city's area, or develop on-the-job training opportunities and participate and assist in any association or employer-group training program relevant to the contractor's employment needs;

(5) Regularly review and evaluate their personnel and promotional opportunities, encourage city residents to seek opportunities and establish a program to monitor compliance with this subchapter; and

(6) Utilize other means of obtaining employees who are residents of the city that are reasonably calculated to assist with achieving the hiring goals.

(B) Contractors shall provide the city with any documentation requested by the Administrator in order to establish compliance with this subchapter.
(Ord. passed 2-21-2012)

§ 34.22 CONTRACT REQUIREMENTS FOR COVERED SERVICES.

(A) This city shall include provisions in Chapter 38, entitled "Centralized Procurement System," of the Code of Waterbury, mandating that each contract for a covered project, as that term is defined herein, awarded pursuant to Chapter 38 include provisions addressing compliance with the provisions of this subchapter by the contractor or contractors thereunder and by any subcontractor or subcontractors performing work related to any such contract.

(B) Whenever provisions are included in a contract for a covered project pursuant to division (A) of this section, they shall include provisions establishing liquidated damages for the failure of any contractor or subcontractor to comply with the provisions of this subchapter. The liquidated damages shall be based on an estimate of the cost the city would incur in having to provide alternative employment opportunities, or alternative economic assistance, to those residents who would have benefited by the city's investment in the covered project if they had been hired by the contractor or subcontractor had they complied with the provisions of this subchapter.

(C) Whenever provisions regarding liquidated damages are included in a contract for a covered project pursuant to division (B) of this section, that contract shall, if applicable, also include provisions addressing the following matters:

(1) Weekly compliance reviews by the Administrator for the purpose of assessing compliance with the provisions of this subchapter, or the lack thereof;

(2) Requiring a separate certification of compliance by the Administrator prior to the payment of any funds by the city under any such contract;

(3) The assessment of liquidated damages while said contract is executory;

(4) The retention, by the city, of funds due from it under the contract in amounts sufficient to offset any assessment of liquidated damages outstanding at the time the funds are due from the city.
(Ord. passed 2-21-2012)

EXHIBIT "B"

U.S. Department of Housing and Urban Development
SF 424 – Certifications

SF 424

The SF 424 is part of the CPMP Annual Action Plan. SF 424 form fields are included in this document. Grantee information is linked from the 1CPMP.xls document of the CPMP tool.

SF 424

Complete the fillable fields (blue cells) in the table below. The other items are pre-filled with values from the Grantee Information Worksheet.

Date Submitted	Applicant Identifier	Type of Submission	
Date Received by state	State Identifier	Application	Pre-application
Date Received by HUD	Federal Identifier	☐ Construction	☐ Construction
		☐ Non Construction	☐ Non Construction
Applicant Information			
Jurisdiction		CT91194 WATERBURY	
City of Waterbury		877983022	
C/O Waterbury Development Corporation			
Waterbury	Connecticut		
06702	Country U.S.A.		
Employer Identification Number (EIN):		New Haven	
06-6001900		7/1	
Applicant Type:		**Specify Other Type if necessary:**	
Local Government: City			
Program Funding		**U.S. Department of Housing and Urban Development**	
Catalogue of Federal Domestic Assistance Numbers; Descriptive Title of Applicant Project(s); Areas Affected by Project(s) (cities, Counties, localities etc.); Estimated Funding			
Community Development Block Grant		14.218 Entitlement Grant	
CDBG Project Titles		Description of Areas Affected by CDBG Project(s)	
$ 1,996,547 CDBG Grant Amount	Additional HUD Grant(s) Levereged	Describe	
$Additional Federal Funds Leveraged		$Additional State Funds Leveraged	
$Locally Leveraged Funds		$Grantee Funds Leveraged	
$12,000 Anticipated Program Income		Other (Describe) $100,000 reprogrammed funds	
Total Funds Leveraged for CDBG-based Project(s)			
Home Investment Partnerships Program		14.239 HOME	
HOME Project Titles		Description of Areas Affected by HOME Project(s)	
$ 709,624 Home Grant Amount	$Additional HUD Grant(s) Leveraged	Describe	
$Additional Federal Funds Leveraged		$Additional State Funds Leveraged	
$Locally Leveraged Funds		$Grantee Funds Leveraged	

$16,300 Anticipated Program Income	Other (Describe)
Total Funds Leveraged for HOME-based Project(s)	

Housing Opportunities for People with AIDS	14.241 HOPWA	
HOPWA Project Titles	Description of Areas Affected by HOPWA Project(s)	
$HOPWA Grant Amount	$Additional HUD Grant(s) Leveraged	Describe
$Additional Federal Funds Leveraged	$Additional State Funds Leveraged	
$Locally Leveraged Funds	$Grantee Funds Leveraged	
$Anticipated Program Income	Other (Describe)	
Total Funds Leveraged for HOPWA-based Project(s)		

Emergency Solutions Grants Program	14.231 ESG	
ESG Project Titles	Description of Areas Affected by ESG Project(s)	
$137,010 ESG Grant Amount	$Additional HUD Grant(s) Leveraged	Describe
$Additional Federal Funds Leveraged	$Additional State Funds Leveraged	
$Locally Leveraged Funds	$Grantee Funds Leveraged	
$Anticipated Program Income	Other (Describe)	
Total Funds Leveraged for ESG-based Project(s)		

Congressional Districts of: CT-003 & CT-005		Is application subject to review by state Executive Order 12372 Process?	
Applicant Districts	Project Districts	☐ Yes	This application was made available to the state EO 12372 process for review on DATE
Is the applicant delinquent on any federal debt? If "Yes" please include an additional document explaining the situation.		☒ No	Program is not covered by EO 12372
☐ Yes	☒ No	☐ N/A	Program has not been selected by the state for review

Person to be contacted regarding this application		
Kevin	M.	DelGobbo
Chief Executive Officer	Phone: 203-346-2607	Fax: 203-346-3910
Email: DelGobbo@wdconline.org	Website: www.wdconline.org	Other:
Signature of Authorized Representative Neil M. O'Leary, Mayor		Date Signed 7/10

CERTIFICATIONS

In accordance with the applicable statutes and the regulations governing the consolidated plan regulations, the jurisdiction certifies that:

Affirmatively Further Fair Housing – The jurisdiction will affirmatively further fair housing, which means it will conduct an analysis of impediments to fair housing choice within the jurisdiction, take appropriate actions to overcome the effects of any impediments identified through that analysis, and maintain records reflecting that analysis and actions in this regard.

Anti-displacement and Relocation Plan -- It will comply with the acquisition and relocation requirements of the Uniform Relocation Assistance and Real Property Acquisition Policies Act of 1970, as amended, and implementing regulations at 49 CFR 24; and it has in effect and is following a residential antidisplacement and relocation assistance plan required under section 104(d) of the Housing and Community Development Act of 1974, as amended, in connection with any activity assisted with funding under the CDBG or HOME programs.

Drug Free Workplace – It will or will continue to provide a drug-free workplace by:

1. Publishing a statement notifying employees that the unlawful manufacture, distribution, dispensing, possession, or use of a controlled substance is prohibited in the grantee's workplace and specifying the actions that will be taken against employees for violation of such prohibition;

2. Establishing an ongoing drug-free awareness program to inform employees about -

   (a) The dangers of drug abuse in the workplace;
   (b) The grantee's policy of maintaining a drug-free workplace;
   (c) Any available drug counseling, rehabilitation, and employee assistance programs; and
   (d) The penalties that may be imposed upon employees for drug abuse violations occurring in the workplace;

3. Making it a requirement that each employee to be engaged in the performance of the grant be given a copy of the statement required by paragraph 1;

4. Notifying the employee in the statement required by paragraph 1 that, as a condition of employment under the grant, the employee will -

   (a) Abide by the terms of the statement; and

   (b) Notify the employer in writing of his or her conviction for a violation of a criminal drug statute occurring in the workplace no later than five calendar days after such conviction;

5. Notifying the agency in writing, within ten calendar days after receiving notice under subparagraph 4(b) from an employee or otherwise receiving actual notice of such conviction. Employers of convicted employees must provide notice, including position title, to every grant officer or other designee on whose grant activity the convicted employee was working, unless the Federal agency has designated a central point for the receipt of such notices. Notice shall include the identification number(s) of each affected grant;

6. Taking one of the following actions, within 30 calendar days of receiving notice under subparagraph 4(b), with respect to any employee who is so convicted -

(a) Taking appropriate personnel action against such an employee, up to and including termination, consistent with the requirements of the Rehabilitation Act of 1973, as amended; or

(b) Requiring such employee to participate satisfactorily in a drug abuse assistance or rehabilitation program approved for such purposes by a Federal, State, or local health, law enforcement, or other appropriate agency;

7. Making a good faith effort to continue to maintain a drug-free workplace through implementation of paragraphs 1, 2, 3, 4, 5 and 6.

Anti-Lobbying -- To the best of the jurisdiction's knowledge and belief:

1. No Federal appropriated funds have been paid or will be paid, by or on behalf of it, to any person for influencing or attempting to influence an officer or employee of any agency, a Member of Congress, an officer or employee of Congress, or an employee of a Member of Congress in connection with the awarding of any Federal contract, the making of any Federal grant, the making of any Federal loan, the entering into of any cooperative agreement, and the extension, continuation, renewal, amendment, or modification of any Federal contract, grant, loan, or cooperative agreement;

2. If any funds other than Federal appropriated funds have been paid or will be paid to any person for influencing or attempting to influence an officer or employee of any agency, a Member of Congress, an officer or employee of Congress, or an employee of a Member of Congress in connection with this Federal contract, grant, loan, or cooperative agreement, it will complete and submit Standard Form-LLL, "Disclosure Form to Report Lobbying," in accordance with its instructions; and

3. It will require that the language of paragraph 1 and 2 of this anti-lobbying certification be included in the award documents for all subawards at all tiers (including subcontracts, subgrants, and contracts under grants, loans, and cooperative agreements) and that all subrecipients shall certify and disclose accordingly.

Authority of Jurisdiction -- The consolidated plan is authorized under State and local law (as applicable) and the jurisdiction possesses the legal authority to carry out the programs for which it is seeking funding, in accordance with applicable HUD regulations.

Consistency with plan -- The housing activities to be undertaken with CDBG, HOME, ESG, and HOPWA funds are consistent with the strategic plan.

Section 3 -- It will comply with section 3 of the Housing and Urban Development Act of 1968, and implementing regulations at 24 CFR Part 135.

Neil M. O'Leary — Date: 1/10/13

Mayor, City of Waterbury

EXHIBIT "C"
CFR Procurement Requirements
24 C.F.R. §84.40 – 84.48

Code of Federal Regulations
Title 24. Housing and Urban Development
Subtitle A. Office of the Secretary, Department of Housing and Urban Development
Part 84. Uniform Administrative Requirements for Grants and Agreements with Institutions of Higher Education, Hospitals, and Other Non--Profit Organizations (Refs & Annos)
Subpart C. Post--Award Requirements
Procurement Standards

24 C.F.R. § 84.40

§ 84.40 Purpose of procurement standards.

Currentness

Sections 84.41 through 84.48 set forth standards for use by recipients in establishing procedures for the procurement of supplies and other expendable property, equipment, real property and other services with Federal funds. These standards are furnished to ensure that such materials and services are obtained in an effective manner and in compliance with the provisions of applicable Federal statutes and executive orders. No additional procurement standards or requirements shall be imposed by HUD upon recipients, unless specifically required by Federal statute or executive order or approved by OMB.

SOURCE: 59 FR 47011, Sept. 13, 1994; 65 FR 30499, May 11, 2000, unless otherwise noted.

AUTHORITY: 42 U.S.C. 3535(d).

Current through January 16, 2014; 79 FR 3039

End of Document

© 2014 Thomson Reuters. No claim to original U.S. Government Works.

Code of Federal Regulations
Title 24. Housing and Urban Development
Subtitle A. Office of the Secretary, Department of Housing and Urban Development
Part 84. Uniform Administrative Requirements for Grants and Agreements with Institutions of Higher Education, Hospitals, and Other Non–Profit Organizations (Refs & Annos)
Subpart C. Post–Award Requirements
Procurement Standards

24 C.F.R. § 84.41

§ 84.41 Recipient responsibilities.

Currentness

The standards contained in this section do not relieve the recipient of the contractual responsibilities arising under its contract(s). The recipient is the responsible authority, without recourse to HUD, regarding the settlement and satisfaction of all contractual and administrative issues arising out of procurements entered into in support of an award or other agreement. This includes disputes, claims, protests of award, source evaluation or other matters of a contractual nature. Matters concerning violation of statute are to be referred to such Federal, State or local authority as may have proper jurisdiction.

SOURCE: 59 FR 47011, Sept. 13, 1994; 65 FR 30499, May 11, 2000, unless otherwise noted.

AUTHORITY: 42 U.S.C. 3535(d).

Current through January 16, 2014; 79 FR 3039

End of Document

© 2014 Thomson Reuters. No claim to original U.S. Government Works.

Code of Federal Regulations
Title 24. Housing and Urban Development
Subtitle A. Office of the Secretary, Department of Housing and Urban Development
Part 84. Uniform Administrative Requirements for Grants and Agreements with Institutions of Higher Education, Hospitals, and Other Non–Profit Organizations (Refs & Annos)
Subpart C. Post–Award Requirements
Procurement Standards

24 C.F.R. § 84.42

§ 84.42 Codes of conduct.

Currentness

The recipient shall maintain written standards of conduct governing the performance of its employees engaged in the award and administration of contracts. No employee, officer, or agent shall participate in the selection, award, or administration of a contract supported by Federal funds if a real or apparent conflict of interest would be involved. Such a conflict would arise when the employee, officer, or agent, any member of his or her immediate family, his or her partner, or an organization which employs or is about to employ any of the parties indicated herein, has a financial or other interest in the firm selected for an award. The officers, employees, and agents of the recipient shall neither solicit nor accept gratuities, favors, or anything of monetary value from contractors, or parties to subagreements. However, recipients may set standards for situations in which the financial interest is not substantial or the gift is an unsolicited item of nominal value. The standards of conduct shall provide for disciplinary actions to be applied for violations of such standards by officers, employees, or agents of the recipient.

SOURCE: 59 FR 47011, Sept. 13, 1994; 65 FR 30499, May 11, 2000, unless otherwise noted.

AUTHORITY: 42 U.S.C. 3535(d).

Current through January 16, 2014; 79 FR 3039

End of Document

© 2014 Thomson Reuters. No claim to original U.S. Government Works.

Code of Federal Regulations
Title 24. Housing and Urban Development
Subtitle A. Office of the Secretary, Department of Housing and Urban Development
Part 84. Uniform Administrative Requirements for Grants and Agreements with Institutions of Higher Education, Hospitals, and Other Non–Profit Organizations (Refs & Annos)
Subpart C. Post–Award Requirements
Procurement Standards

24 C.F.R. § 84.43

§ 84.43 Competition.

Currentness

All procurement transactions shall be conducted in a manner to provide, to the maximum extent practical, open and free competition. The recipient shall be alert to organizational conflicts of interest as well as noncompetitive practices among contractors that may restrict or eliminate competition or otherwise restrain trade. In order to ensure objective contractor performance and eliminate unfair competitive advantage, contractors that develop or draft specifications, requirements, statements of work, invitations for bids and/or requests for proposals shall be excluded from competing for such procurements. Awards shall be made to the bidder or offeror whose bid or offer is responsive to the solicitation and is most advantageous to the recipient, price, quality and other factors considered. The other factors shall include the bidder's or offeror's compliance with Section 3 of the Housing and Urban Development Act of 1968 (12 U.S.C. 1701u), hereafter referred to as "Section 3." Section 3 provides that, to the greatest extent feasible, and consistent with existing Federal, State, and local laws, and regulations, economic opportunities generated by certain HUD financial assistance shall be directed to low- and very low-income persons. Solicitations shall clearly set forth all requirements that the bidder or offeror shall fulfill in order for the bid or offer to be evaluated by the recipient. Any and all bids or offers may be rejected when it is in the recipient's interest to do so.

SOURCE: 59 FR 47011, Sept. 13, 1994; 65 FR 30499, May 11, 2000, unless otherwise noted.

AUTHORITY: 42 U.S.C. 3535(d).

Current through January 16, 2014; 79 FR 3039

Code of Federal Regulations
Title 24. Housing and Urban Development
Subtitle A. Office of the Secretary, Department of Housing and Urban Development
Part 84. Uniform Administrative Requirements for Grants and Agreements with Institutions of Higher Education, Hospitals, and Other Non–Profit Organizations (Refs & Annos)
Subpart C. Post–Award Requirements
Procurement Standards

24 C.F.R. § 84.44

§ 84.44 Procurement procedures.

Effective: January 28, 2008
Currentness

(a) All recipients shall establish written procurement procedures. These procedures shall provide for, at a minimum, that paragraphs (a)(1), (a)(2) and (a)(3) of this section apply.

(1) Recipients avoid purchasing unnecessary items.

(2) Where appropriate, an analysis is made of lease and purchase alternatives to determine which would be the most economical and practical procurement for the Federal Government.

(3) Solicitations for goods and services provide for all of the following.

(i) A clear and accurate description of the technical requirements for the material, product or service to be procured. In competitive procurements, such a description shall not contain features which unduly restrict competition.

(ii) Requirements which the bidder/offeror must fulfill and all other factors to be used in evaluating bids or proposals.

(iii) A description, whenever practicable, of technical requirements in terms of functions to be performed or performance required, including the range of acceptable characteristics or minimum acceptable standards.

(iv) The specific features of "brand name or equal" descriptions that bidders are required to meet when such items are included in the solicitation.

(v) The acceptance, to the extent practicable and economically feasible, of products and services dimensioned in the metric system of measurement.

(vi) Preference, to the extent practicable and economically feasible, for products and services that conserve natural resources and protect the environment and are energy efficient.

(b) Positive efforts shall be made by recipients to utilize small businesses, minority-owned firms, and women's business enterprises, whenever possible. Recipients of Federal awards shall take all of the following steps to further this goal.

(1) Ensure that small businesses, minority-owned firms, and women's business enterprises are used to the fullest extent practicable.

(2) Make information on forthcoming opportunities available and arrange time frames for purchases and contracts to encourage and facilitate participation by small businesses, minority-owned firms, and women's business enterprises.

(3) Consider in the contract process whether firms competing for larger contracts intend to subcontract with small businesses, minority-owned firms, and women's business enterprises.

(4) Encourage contracting with consortiums of small businesses, minority-owned firms and women's business enterprises when a contract is too large for one of these firms to handle individually.

(5) Use the services and assistance, as appropriate, of such organizations as the Small Business Administration and the Department of Commerce's Minority Business

Development Agency in the solicitation and utilization of small businesses, minority-owned firms and women's business enterprises.

(c) The type of procuring instruments used (e.g., fixed price contracts, cost reimbursable contracts, purchase orders, and incentive contracts) shall be determined by the recipient but shall be appropriate for the particular procurement and for promoting the best interest of the program or project involved. The "cost-plus-a-percentage-of-cost" or "percentage of construction cost" methods of contracting shall not be used.

(d) Contracts shall be made only with responsible contractors who possess the potential ability to perform successfully under the terms and conditions of the proposed procurement. Consideration shall be given to such matters as contractor integrity; compliance with public policy, including, where applicable, Section 3 of the Housing and Urban Development Act of 1968 (12 U.S.C. 1701u); record of past performance; and financial and technical resources or accessibility to other necessary resources. In certain circumstances, contracts with certain parties are restricted by implementation of Executive Orders 12549 and 12689, "Debarment and Suspension," at 2 CFR part 2424.

(e) Recipients shall, on request, make available for the Federal awarding agency, pre-award review and procurement documents, such as requests for proposals or invitations for bids, independent cost estimates, etc., when any of the following conditions apply.

(1) A recipient's procurement procedures or operation fails to comply with the procurement standards in HUD's implementation of Circular A–110.

(2) The procurement is expected to exceed $100,000 or the small purchase threshold fixed at 41 U.S.C. 403 (11), whichever is greater, and is to be awarded without competition or only one bid or offer is received in response to a solicitation.

(3) The procurement, which is expected to exceed the small purchase threshold, specifies a "brand name" product.

(4) The proposed award over the small purchase threshold is to be awarded to other than the apparent low bidder under a sealed bid procurement.

(5) A proposed contract modification changes the scope of a contract or increases the contract amount by more than the amount of the small purchase threshold.

Credits
[72 FR 73492, Dec. 27, 2007]

SOURCE: 59 FR 47011, Sept. 13, 1994; 65 FR 30499, May 11, 2000, unless otherwise noted.

AUTHORITY: 42 U.S.C. 3535(d).

Current through January 16, 2014; 79 FR 3039

End of Document

© 2014 Thomson Reuters. No claim to original U.S. Government Works.

Code of Federal Regulations
Title 24. Housing and Urban Development
Subtitle A. Office of the Secretary, Department of Housing and Urban Development
Part 84. Uniform Administrative Requirements for Grants and Agreements with Institutions of Higher Education, Hospitals, and Other Non–Profit Organizations (Refs & Annos)
Subpart C. Post–Award Requirements
Procurement Standards

24 C.F.R. § 84.45

§ 84.45 Cost and price analysis.

Currentness

Some form of cost or price analysis shall be made and documented in the procurement files in connection with every procurement action. Price analysis may be accomplished in various ways, including the comparison of price quotations submitted, market prices and similar indicia, together with discounts. Cost analysis is the review and evaluation of each element of cost to determine reasonableness, allocability and allowability.

SOURCE: 59 FR 47011, Sept. 13, 1994; 65 FR 30499, May 11, 2000, unless otherwise noted.

AUTHORITY: 42 U.S.C. 3535(d).

Current through January 16, 2014; 79 FR 3039

End of Document

© 2014 Thomson Reuters. No claim to original U.S. Government Works.

Code of Federal Regulations
Title 24. Housing and Urban Development
Subtitle A. Office of the Secretary, Department of Housing and Urban Development
Part 84. Uniform Administrative Requirements for Grants and Agreements with Institutions of Higher Education, Hospitals, and Other Non–Profit Organizations (Refs & Annos)
Subpart C. Post–Award Requirements
Procurement Standards

24 C.F.R. § 84.46

§ 84.46 Procurement records.

Currentness

Procurement records and files for purchases in excess of the small purchase threshold shall include the following at a minimum:

(a) Basis for contractor selection;

(b) Justification for lack of competition when competitive bids or offers are not obtained; and

(c) Basis for award cost or price.

SOURCE: 59 FR 47011, Sept. 13, 1994; 65 FR 30499, May 11, 2000, unless otherwise noted.

AUTHORITY: 42 U.S.C. 3535(d).

Current through January 16, 2014; 79 FR 3039

End of Document

© 2014 Thomson Reuters. No claim to original U.S. Government Works.

Code of Federal Regulations
Title 24. Housing and Urban Development
Subtitle A. Office of the Secretary, Department of Housing and Urban Development
Part 84. Uniform Administrative Requirements for Grants and Agreements with Institutions of Higher Education, Hospitals, and Other Non–Profit Organizations (Refs & Annos)
Subpart C. Post–Award Requirements
Procurement Standards

24 C.F.R. § 84.47

§ 84.47 Contract administration.

Currentness

A system for contract administration shall be maintained to ensure contractor conformance with the terms, conditions and specifications of the contract and to ensure adequate and timely follow up of all purchases. Recipients shall evaluate contractor performance and document, as appropriate, whether contractors have met the terms, conditions and specifications of the contract.

SOURCE: 59 FR 47011, Sept. 13, 1994; 65 FR 30499, May 11, 2000, unless otherwise noted.

AUTHORITY: 42 U.S.C. 3535(d).

Current through January 16, 2014; 79 FR 3039

End of Document

© 2014 Thomson Reuters. No claim to original U.S. Government Works.

Code of Federal Regulations
Title 24. Housing and Urban Development
Subtitle A. Office of the Secretary, Department of Housing and Urban Development
Part 84. Uniform Administrative Requirements for Grants and Agreements with Institutions of Higher Education, Hospitals, and Other Non–Profit Organizations (Refs & Annos)
Subpart C. Post–Award Requirements
Procurement Standards

24 C.F.R. § 84.48

§ 84.48 Contract provisions.

Currentness

The recipient shall include, in addition to provisions to define a sound and complete agreement, the following provisions in all contracts. The following provisions shall also be applied to subcontracts.

(a) Contracts in excess of the small purchase threshold shall contain contractual provisions or conditions that allow for administrative, contractual, or legal remedies in instances in which a contractor violates or breaches the contract terms, and provide for such remedial actions as may be appropriate.

(b) All contracts in excess of the small purchase threshold shall contain suitable provisions for termination by the recipient, including the manner by which termination shall be effected and the basis for settlement. In addition, such contracts shall describe conditions under which the contract may be terminated for default as well as conditions where the contract may be terminated because of circumstances beyond the control of the contractor.

(c) Except as otherwise required by statute, an award that requires the contracting (or subcontracting) for construction or facility improvements shall provide for the recipient to follow its own requirements relating to bid guarantees, performance bonds, and payment bonds unless the construction contract or subcontract exceeds $100,000. For those contracts or subcontracts exceeding $100,000, HUD may accept the bonding policy and requirements of the recipient, provided HUD has made a determination that the Federal Government's interest is adequately

WestlawNext © 2014 Thomson Reuters. No claim to original U.S. Government Works.

protected. If such a determination has not been made, the minimum requirements shall be as follows:

(1) A bid guarantee from each bidder equivalent to five percent of the bid price. The "bid guarantee" shall consist of a firm commitment such as a bid bond, certified check, or other negotiable instrument accompanying a bid as assurance that the bidder shall, upon acceptance of his bid, execute such contractual documents as may be required within the time specified.

(2) A performance bond on the part of the contractor for 100 percent of the contract price. A "performance bond" is one executed in connection with a contract to secure fulfillment of all the contractor's obligations under such contract.

(3) A payment bond on the part of the contractor for 100 percent of the contract price. A "payment bond" is one executed in connection with a contract to assure payment as required by statute of all persons supplying labor and material in the execution of the work provided for in the contract.

(4) Where bonds are required in the situations described herein, the bonds shall be obtained from companies holding certificates of authority as acceptable sureties pursuant to 31 CFR part 223, "Surety Companies Doing Business with the United States."

(d) All negotiated contracts (except those for less than the small purchase threshold) awarded by recipients shall include a provision to the effect that the recipient, HUD, the Comptroller General of the United States, or any of their duly authorized representatives, shall have access to any books, documents, papers and records of the contractor which are directly pertinent to a specific program for the purpose of making audits, examinations, excerpts and transcriptions.

(e) All contracts, including small purchases, awarded by recipients and their contractors shall contain the procurement provisions of Appendix A to this rule, as applicable.

SOURCE: 59 FR 47011, Sept. 13, 1994; 65 FR 30499, May 11, 2000, unless otherwise noted.

AUTHORITY: 42 U.S.C. 3535(d).

Current through January 16, 2014; 79 FR 3039

EXHIBIT "D"

List of Current WDC Projects

Waterbury Development Corporation
Current Programs/Projects

Programs/Grants (Project Manager)[1]

Community Development Block Grant (Diane Toolan)
Emergency Solutions Grant (Diane Toolan)
Neighborhood Stabilization Program (Diane Toolan)
Neighborhood Stabilization Program III (Diane Toolan)
HOME (Tina Lubus)
HUD – Neighborhood Initiative Grant (Diane Toolan)
HUD – Economic Development Initiative Grant (Diane Toolan)
DECD Brownfield Study Program (Todd Montello)
DECD Brownfield Municipal Pilot Program (Todd Montello)
EPA 2009 Assessment Grant (Todd Montello)
EPA 2010 Assessment Grant (Todd Montello)
EPA 2012 Assessment Grant (Todd Montello)
EPA Dual Action Grant (Andrew Martelli)

Projects (Project Manager)[1]

East End Public Facility Acquisition Project – Former Mattatuck Manufacturing Site (Andrew Martelli)
Cherry Street Industrial Park Remediation & Redevelopment Project (Todd Montello)
Waterbury Industrial Commons Remediation & Redevelopment Project (Andrew Martelli)
Municipal Stadium Project (Andrew Martelli)
UCONN Acquisition & Redevelopment (The Rectory) Project (Andrew Martelli)
MacDermid Property Acquisition/Public Works Facility Project (Todd Montello – Acquisition Phase/Andrew Martelli – Construction Phase)
Mill Street Abatement, Demolition, Remediation & Reuse Project (Andrew Martelli)
Meadow Street Abatement, Demolition & Reuse Project (Andrew Martelli)
Mad River Development Regional Brownfield Remediation & Reuse Project (Todd Montello)

[1]. The City will be notified immediately, in writing, of PM designation changes.

Place holder for the Curtin Park Renovation Project Authorization Letter between the City of Waterbury and the Waterbury Development Corporation. This Project Authorization Letter is an agenda item on the October 19, 2026 Board of Aldermen Meeting.

Attachment R

CURTIN PARK RESTORATION

DESCRIPTION OF WORK	BUDGET COST	Grant	City Match
DEMO AND SURVEYING			
Mobilization and Demobilization (Site contractor)	$ 11,375.00	$ 5,687.50	$ 5,687.50
Surveying & Layout	$ 12,375.00	$ 6,187.50	$ 6,187.50
Clearing & Grubbing 2,800 sq ft	$ 88,375.00	$ 44,187.50	$ 44,187.50
Demo and disposal of tennis courts	$ 68,375.00	$ 34,187.50	$ 34,187.50
Removal of fences in the existing tennis courts (LF)	$ 12,955.00	$ 6,477.50	$ 6,477.50
Removal of fence around the park, except on behind the baseball field and north fence	$ 17,390.93	$ 8,695.47	$ 8,695.47
Demo and disposal of entry asphalt	$ 18,121.16	$ 9,060.58	$ 9,060.58
Cleaning site garbage debris	$ 9,875.00	$ 4,937.50	$ 4,937.50
Subtotal Demo and Surveying	*$ 238,842.09*	**$ 119,421.05**	**$ 119,421.05**
RESTORATION WORK			
Removal and installation of 2 new swings, including safety surface (wood fiber)	$ 20,375.00		$ 20,375.00
Re-surface 2 basketball courts	$ 58,375.00		$ 58,375.00
Splash pad - modify activation post to ground mount due to continued vandalism	$ 11,375.00		$ 11,375.00
Ball field restoration - allowance	$ 23,375.00		$ 23,375.00
Existing Light pole rework	$ 15,375.00	$ 15,375.00	
Existing storm drainage - rework and cleaning	$ 12,375.00	$ 12,375.00	
Existing bridge restoration & railings	$ 18,375.00	$ 18,375.00	
Driveway entrance 20x60=1200SF	$ 16,875.00	$ 16,875.00	
Drinking fountain	$ 11,375.00	$ 11,375.00	
Subtotal Restoration Work	*$ 187,875.00*	**$ 74,375.00**	**$ 113,500.00**
NEW CONSTRUCTION			

4" asphalt Walking path - 10 ft wide - 2" binder & 2" surface (sq ft)		$	99,675.00	$	49,837.50	$	49,837.50
New fence around the basketball courts - 2 sides (LF)		$	26,855.00			$	26,855.00
	estanding outdoor entrance sign 5 ft wide x 6 feet tall, installed	$	22,375.00				
				$	11,187.50	$	11,187.50
	12 ft Steel swing-style, powder-coated barrier gate - installed	$	20,375.00				
						$	20,375.00
	Steel heavy duty municipal goal, net and installation	$	14,575.00				
						$	14,575.00
5' tall Galvanized Chain link fence - 1,800 lf - installed		$	26,883.00			$	26,883.00
Metal picnic tables		$	19,125.00	$	9,562.50	$	9,562.50
	6' metal bench	$	58,475.00				
				$	29,237.50	$	29,237.50
	Dual 20 gal trash can	$	39,375.00				
				$	19,687.50	$	19,687.50

Seeding of 20,000 sf (tennis courts) - Rough grading, compaction - 370CY of topsoil - fine grading & seedbed prep - seed and fertilizer	$	58,375.00	$	58,375.00		
Landscape & seeding 30,000 sf, top soil 550 yard (allowance)	$	65,375.00	$	65,375.00		
Subtotal New Construction	*$*	*451,463.00*	**$**	**243,262.50**	**$**	**208,200.50**
Subtotal of demolition & surveying, restoration, and new construction			**$**	**437,058.55**	**$**	**441,121.55**
Subtotal	**$**	**878,180.09**				
Owner's Contingency (10%)	$	121,688.71	$	60,844.36	$	60,844.36
Total Hard Cost - Rough Estimate	**$**	**999,868.80**	**$**	**497,902.90**	**$**	**501,965.90**
Architect / Engineering drawings & specs (10%)	$	99,986.88	$	49,993.44	$	49,993.44
BUDGET GRAND TOTAL	**$**	**1,099,855.68**	**$**	**547,896.34**	**$**	**551,959.34**

Attachment S

Attachment S Resolution Placeholder

Attachment U

Parks and Recreation

The City's parks and recreation system have undergone a transformation over the last decade. The Bureau of Parks is responsible for the daily maintenance and upkeep of the City's 34 parks, and athletic fields at the Middle and High Schools. The City also maintains two public golf courses. Three new parks have been added over the last decade: George Tirado, Sr. Park, Lt. Vincent Riddick Park, and Platt Park. Two projects involved the conversion of derelict sites into community assets, while the third created a river access for the new Naugatuck River Greenway.

In addition to new parks, the City has made substantial renovations at existing parks. New pools were built at Hamilton Park, Washington Park, and Fulton Park, fields and locker rooms at Municipal Stadium were renovated, The Green and Library Park in Downtown Waterbury were renovated, eight new playscapes and numerous playground upgrades were made, new courts were installed at Murray Park and Waterville Park, and new roofs were installed at the River Baldwin and Chase Park Recreation Centers. These investments have improved quality of life throughout the City.

With substantial investments made over the last decade, the City intends to focus on park maintenance and rehabilitation projects over the next decade. Planned improvements include continued upgrades to Hamilton Park, court and field replacements, and roof replacements at recreation centers.

In addition to public parks and recreation centers, the City is also home to numerous private facilities that also meet community needs, such as the Police Activity League, Greater Waterbury YMCA, the Boys & Girls Club, Girls, Inc., and the Country Club of Waterbury.



Renovated Hamilton Park Pool



George S. Tirado Sr. Park was built on a the site of Nova Die, a brownfield site in the CIty's South End neighborhood.
Source: NVCOG



Platt Park connects Phase 1 of the Naugatuck River Greenway trail to the river in the City's Platts Mill neighborhood.

3. **Align City Services to Shifting Demographics and Growing Population**
    - Explore opportunities to expand program space at the Waterbury Senior Center to meet growing demand for services.
    - Address capital needs and programmatic needs at Silas Bronson Library.
    - Expand access to language translation for key City services.

4. **Maintain and Improve the Public Parks System**
    - Continue to complete upgrades to Hamilton Park, using a phased approach.
    - Rehabilitate and maintain existing parks, playgrounds, recreation centers, and golf courses.
    - Continue to make accessibility improvements to City parks and playgrounds to ensure that they are accessible to all.
    - Continue to plan for the future Jackson Street Park as part of redevelopment efforts in the Freight Street District.
    - As part of greenway planning and design efforts, incorporate river access and pocket parks into the greenway system, where feasible.





Fire Station 1 (left) is currently undergoing a major renovation and is one of several upgrades planned at public safety facilities over the next decade. The historic Chase Building (right) will undergo a renovation allowing it to continue to serve as important office space for the City and Board of Education.

Attachment V

9. Open Space

This component of the Plan is intended to recommend the preservation of open space areas of regional significance that can:

- Enhance regional character and quality of life.
- Preserve lands for parks and recreational uses.
- Conserve important natural resources.
- Provide fiscal and economic benefits.
- Shape development patterns.

Current Conditions

Open space is defined as land that is preserved or restricted for park, recreation, cemetery, or conservation use. This definition varies from the perception of many residents that undeveloped land is "open space" even though it may be developed at a future time. About 16 percent of the entire region's land area is some type of open space. Of this, 84 percent is committed open space owned by water companies, land trusts, government entities, cemeteries, and private organizations such as clubs. The remainder of the open space, 16%, is not committed to preservation. These percentages do not include undeveloped private land, but do include municipally owned land used as open space but not permanently protected.

Within the state, the proportion of open space varies by the type of municipality. As the 2005 Statewide Comprehensive Outdoor Recreation Plan (SCORP) states, smaller towns (Beacon Falls and Thomaston) have much larger amounts of recreational acreage than either urban centers (Waterbury) or towns near urban municipalities (Naugatuck), the two municipal categories with the least amount of recreational acreage. All remaining municipalities in the CNVR are classified by SCORP as suburban, the category which has the second largest recreational acreage.

Acquisition of open space is strongly supported by the citizens of Connecticut. The Department of Environmental Protection (DEP) alone owns 66% of the total recreational acreage in the state. While the largest unmet need of Connecticut households reported by the SCORP plan is for multi-use trails, 85% of all households use some type of water-based recreation, and the acquisition of water-based recreational properties is DEP's highest priority.

In its draft *Green Plan*, which identifies sensitive types of ecological areas and unique features that merit protection, DEP's vision is stated as providing:

> *A diverse landscape of protected open space that offers outdoor recreation to Connecticut's citizens, protects water supplies, preserves natural communities and habitats for plants and animals, offers green spaces accessible to all residents, whether residing in urban, suburban or rural communities, and provides a working natural landscape for the harvest of farm and forest products.*



Flander's Nature Center, Woodbury

Table 9.1 Open Space in the CNVR, by Municipality: 2006

Town	Federal	State	Municipal	Private*	Cemetery	Land Trusts	Golf Courses	Water Company	Total
	Committed Open Space (Acres)								
Beacon Falls	0	1,181	259	0	3	42	0	21	1,506
Bethlehem	0	4	149	0	8	391	0	206	758
Cheshire	0	316	1,441	297	20	470	0	1,426	3,970
Middlebury	229	28	0	57	4	881	0	113	1,312
Naugatuck	2	1,009	27	0	118	27	0	235	1,418
Oxford	0	1,233	551	0	12	25	0	0	1,821
Prospect	0	1	88	0	3	78	0	2,198	2,368
Southbury	0	1,202	1,155	944	20	767	0	6	4,094
Thomaston	573	723	172	0	60	0	0	289	1,817
Waterbury	261	409	253	27	329	0	0	0	1,279
Watertown	62	1,877	649	28	178	145	0	648	3,587
Wolcott	0	0	0	0	5	0	0	833	838
Woodbury	0	0	152	785	30	1,667	0	397	3,031
CNVR	1,127	7,983	4,896	2,138	789	4,493	0	6,372	27,799
	Uncommitted Open Space (Acres)								
Beacon Falls	0	0	0	56	0	0	0	0	56
Bethlehem	0	0	21	307	0	0	0	0	328
Cheshire	0	0	0	36	0	0	34	0	70
Middlebury	0	9	311	25	0	0	453	0	798
Naugatuck	0	0	165	2	0	0	73	227	467
Oxford	0	0	273	376	0	0	0	38	687
Prospect	0	0	20	0	0	0	33	217	270
Southbury	0	0	0	0	0	0	238	0	238
Thomaston	0	0	53	23	0	0	0	0	76
Waterbury	0	0	377	42	0	0	492	56	967
Watertown	0	0	32	49	0	0	186	79	346
Wolcott	0	0	204	299	0	0	81	0	584
Woodbury	0	0	401	0	0	73	0	0	474
CNVR	0	9	1,857	1,215	0	73	1,590	617	5,361
Total	1,127	7,992	6,753	3,353	790	4,566	1,590	6,989	33,160

Note: *Included Audubon land, Roxbury land trust, easements, homeowner's associations, etc

Source: COGCNV Staff with assistance from municipalities and local land trusts

Figure 9.1. Open Space
Central Naugatuck Valley

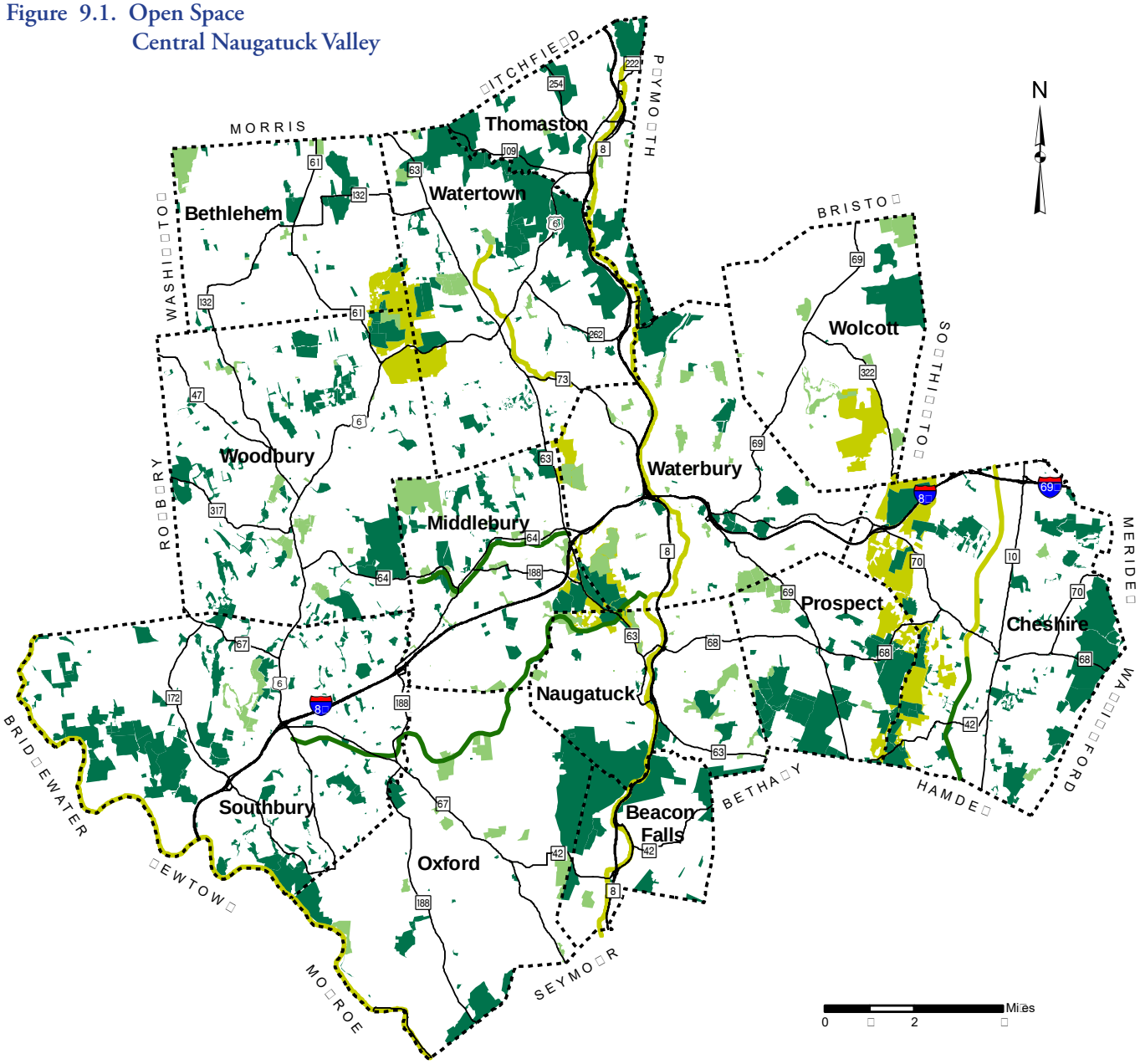

Proposed Open Space Action Areas and Greenways
- This does not include detailed planning by town or land trust.

Preserved Open Space
- This includes protected federal, state, municipal, private, cemetery, land trust, and water company Class I and II land.

Other Open Space
- This includes unprotected state, municipal, private and land trust lands, golf courses, and water company Class III land.

Major Roads

Municipal Boundary

Source: COGCNV staff with assistance from municipalities and local land trusts

For DEP, the goal is:

> *To continue to acquire and protect land to satisfy a variety of needs as expressed in Connecticut General Statutes 23-8(b) and in various State plans, including the* ***Conservation and Development Policies Plan of Connecticut 2005-2010*** *and to support local and regional plans, where available."*

The acquisition tools available to DEP are the Recreation and Natural Heritage Trust Program and the Open Space and Watershed Land Acquisition Grant Program.

Major Recommendations

Protect more open space in the region.

In 1998, the State set a goal of 21% of the total land area, or 673,210 acres, to be preserved as open space by 2023 with 10% by the state and 11% by municipalities, water companies, and conservation organizations. As of January 2005, 78% percent of the state goal and 65% of the non-state goal have been met. These goals compete with housing, commercial, industrial, and other land uses for diminishing available land.



Fulton Park, Waterbury

Recommendations

1. Encourage activities to identify and preserve important open space areas before they are threatened by development.
2. Retain existing private open space through public acquisition, use of open space requirements in subdivision regulations, easements, or other means.
3. Assist the state, municipalities, and land trusts in their efforts to meet the state's open space goal.

Coordinate and prioritize open space preservation throughout the region.

In addition, efforts at preserving open space should not simply be directed to acquiring a certain percentage of land as open space. Instead, efforts should be devoted to creating a meaningful open space system with priority given to the establishment of greenways, open space connections, and the preservation of visible parcels (ridgelines, scenic view areas, steep slopes, agricultural land, and historical or archeological sites). Some municipalities and organizations, such as the Southbury Land Trust, are working to prioritize land for preservation.

Recommendations

1. Maximize the benefits of open space by giving priority to:
   - Establishment of greenways (for wetland protection and wildlife habitat), open space connections (including trails and wildlife corridors), and forests.
   - Multi-purpose areas.
   - Preservation of visible parcels (ridgelines, scenic view areas, steep slopes, and historical or archeological sites).
   - Protection of water resources and lands which protect water quality.
2. Address the difficulty of providing adequate open space in urban areas by:
   - Providing small public greens and "pocket parks".
   - Enhancing and upgrading existing public greens.
   - Promoting street tree programs.
3. Where feasible, encourage creation of:
   - Multi-purpose trail systems (pedestrian, bicycle, bridle, cross-country ski, as appropriate) that link recreational and open space areas.

- Pedestrian and bike paths that link residential, retail, and employment areas.

4. Work to coordinate open space preservation with forests, agriculture, and lands with minimum land use impacts.

Focus efforts on obtaining sites for water-based recreation.

One of the region's most pressing recreational needs is water access to local rivers and lakes, especially new beaches. Lake Quassapaug, the Naugatuck River, and the Quinnipiac River are examples of major water resources in the region that do not have major public access.

Recommendations

1. Encourage efforts to address the region's needs for access to local rivers and lakes, especially new beaches.

Preserve declassified water company land as open space.

Some of the land that residents may believe is protected as open space is at risk. Almost 10%, over 3,400 acres, of the region's total existing open space is in private ownership (such as water companies, golf courses, private clubs) and is not permanently committed open space. Some of this land, as well as some municipal holdings, could potentially be developed in the future. In addition, many people believe that agricultural land registered under Public Act 490 protects open space, when, in fact, it only enables the property owner to feel less pressure to sell immediately. It does not preserve land long term.

Recommendations

1. Work with local communities including land trusts, the state, and other organizations such as the Trust for Public Land and Connecticut Farmland Trust to preserve land, especially Class III and other watershed lands, as open space and/or potential future water supply sources.
2. Undertake education programs on the fiscal benefits of open space protection and use of Public Act 490.



Middlebury Greenway on Route 64, Middlebury

Secondary Recommendations

Encourage use of a broad range of tools to protect open space.

While open space preservation has been shown to be a cost-effective investment for many communities, public acquisition is not the only method available. Open space can also be preserved through the activities of private land trusts, settlement patterns (cluster development), purchase of development rights, transfer of development rights, easements, or other methods. Where public open space protection is desirable and identified, it can be facilitated through the annual budgeting of funds, bonding, or fees in lieu of open space in subdivisions.



Lake Quassapaug, Middlebury



Nonnewaug Falls, Woodbury

Recommendations

1. Promote open space preservation in the region by public and private agencies.
2. Assist local land trusts and other non-profit organizations (such as the Connecticut Land Alliance, Flander's Nature Center, Southbury Land Trust, Prospect Land Trust, etc.) that preserve open space in the region.
3. Encourage communities to budget funds each year for open space acquisition, to aggressively seek open space acquisition grants, and to require open space set-asides in subdivisions.
4. Encourage communities in the region to inventory their preserved open space.
5. Encourage communities to use land use techniques that promote open space protection, such as:
   - Open space set-asides in residential subdivisions.
   - Cluster-type residential developments.
   - Ridgeline protection provisions within zoning regulations.
   - Transfer of development rights.
   - Other flexible land use regulations.

Manage open space effectively to maximize benefits.

Open space should be accessible to all residents of the region. People dependent on public transportation will need open space near bus routes. The Americans with Disabilities Act requires public facilities to provide equal opportunities to all persons to participate in activities. At the same time, each facility must be managed to prevent unwanted damage (such as soil erosion, trampled vegetation, litter, or fires). Lower income people may need facilities without admission fees. The SCORP points out the need for additional parking, improved restrooms, shelters, and other accessibility issues at many public open space areas.

Recommendations

1. Encourage appropriate access to open space and recreational facilities for all residents of the region.
2. Encourage appropriate activities in open space areas to avoid unwanted damage, such as soil erosion, trampled vegetation, litter, fires, and ensure proper management.

Encourage efforts to preserve open space action areas, critical environmental areas, and areas threatened by development.

The following areas are recommended for consideration by the region's municipalities in determining priorities in recreation and open space lands. Many of these proposals were identified in the 1963, 1977, and 1998 Regional Plans.

1. Water-Based Recreational Sites — locate and preserve sites for water-based recreation, especially access points for boating, fishing, or swimming. This may include acquisition of existing watershed lands and reservoirs being considered for abandonment, sites along the Naugatuck, Quinnipiac, Pomperaug or Housatonic Rivers, or other water bodies such as Lake Quassapaug.
2. Greenways (region-wide) — create, extend, and enhance greenways in the region, especially along river corridors (such as the proposed greenway along the

Naugatuck River in Waterbury, the Housatonic River in Southbury, the Quinnipiac River in Cheshire, Steele Brook in Watertown and Waterbury, and the Pomperaug River in Southbury and Woodbury).

3. Recreation Trails (region-wide) — protect, create, extend, and enhance recreational trails throughout the region, the Farmington Canal trail in Cheshire, the trolley line trail in Middlebury, and the Larkin Bridle Trail in Middlebury, Oxford, and Southbury. Encourage the preservation of trail corridors maintained by the Connecticut Forest and Park Association and other groups.
4. Ridgelines — Assist the region's communities in protecting ridgeline areas.
5. Other Recommended Action Areas — In 1967, the Regional Planning Agency of the Central Naugatuck Valley proposed seven open space action areas (see Figure 9.1). One of these, the Lake Quassapaug Action Area, has largely been protected through the efforts of the Flander's Nature Center in Woodbury. Regionwide, over 5,290 acres within the action areas remain available for development and almost 2,940 acres have been preserved.
   - Expand the existing open space preserve at the Nonnewaug Falls area in Bethlehem, Watertown, and Woodbury (Figure 9.2).
   - Create a major open space area near Straits Turnpike in Waterbury, Middlebury, and Watertown (Figure 9.3).
   - Improve access to existing facilities in the Hop Brook area (Middlebury, Naugatuck, Waterbury) containing 703 acres of existing open space (Figure 9.4).
   - Create a major community and regional open space area in Wolcott as recommended in Wolcott's 1973 Plan of Development (Figure 9.5).
   - Enhance existing open space (477 ac.) preserved by the Town of Cheshire with additional lands near I-84 and Route 70 (Figure 9.6).
   - Enhance existing open space on Peck Mountain in Cheshire and Prospect (1,160 ac.) with acquisition of watershed lands or other lands (Figure 9.7).



Volunteer Park, Beacon Falls

While these areas represent resources of potential regional significance due to their size or location, additional open space preservation efforts at the local level and the state level will also be important to the region.

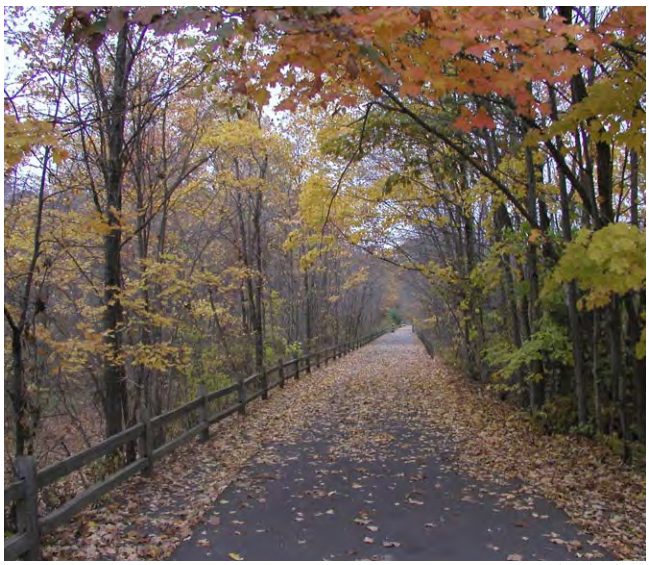

Farmington Canal, Cheshire

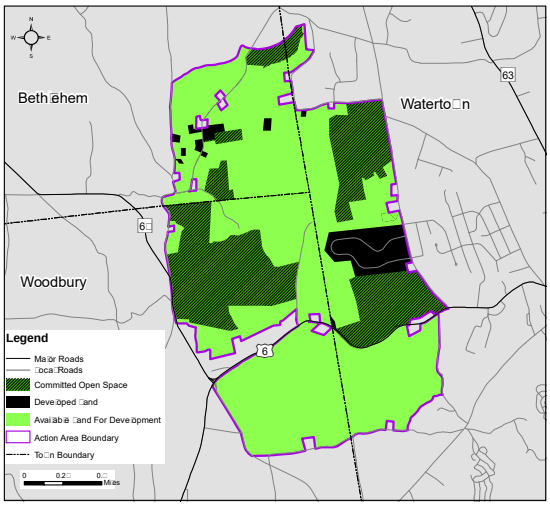

Figure 9.2 Nonnewaug Falls Open Space Action Area

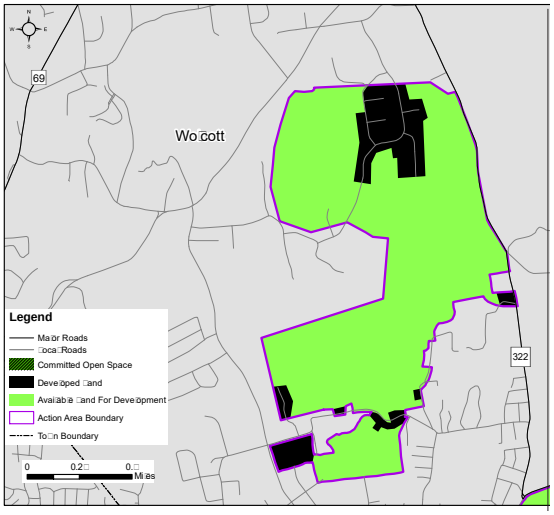

Figure 9.5 Boundline Road Open Space Action Area

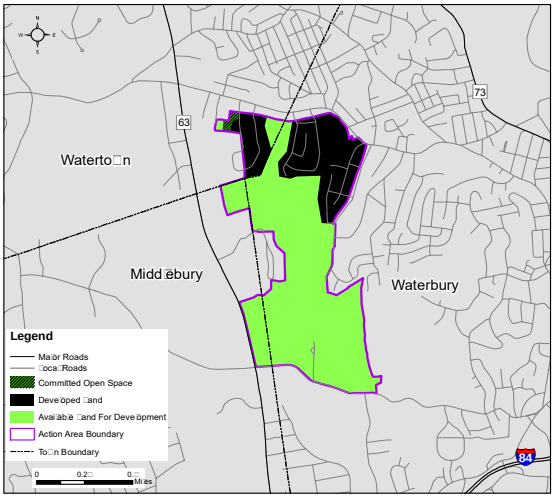

Figure 9.3 Straits Turnpike Open Space Action Area

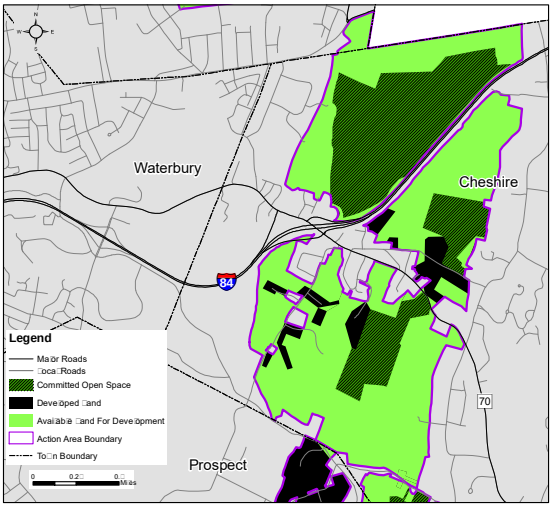

Figure 9.6 I-84 Connecticut Route 70 Open Space Action Area

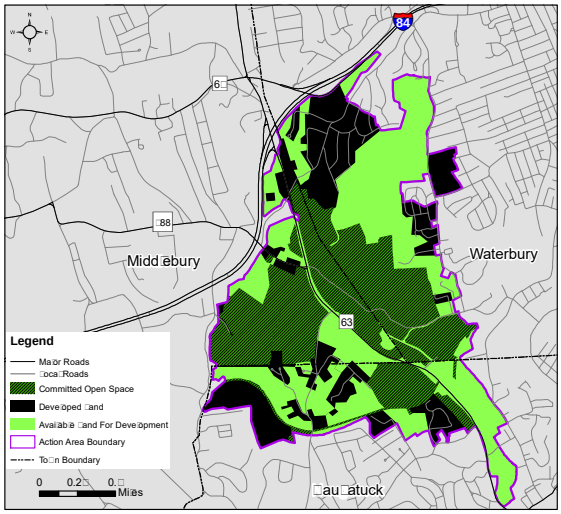

Figure 9.4 Hop Brook Open Space Action Area

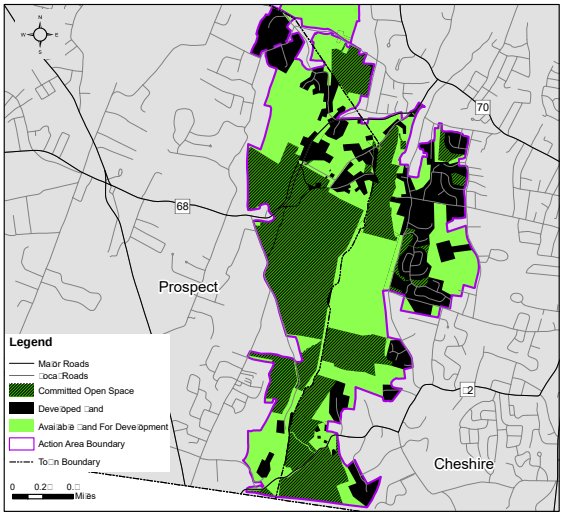

Figure 9.7 Peck Mountain Open Space Action Area

Conceptual Plan



WATERBURY

CURTIN PARK FIELD

CONCEPTUAL VIEW

Curtin Park Photos

Curtin Park Photos



Drone Photo taken August 31, 2026



Drone Photo taken August 31, 2026



Drone Photo taken August 31, 2026



Drone Photo Taken August 31, 2026



August 3, 2026 taken from Spring Brook Road Entrance showing the asphalt to be removed, gate and fencing to be replaced, and vegetation to be trimmed or removed.



August 3, 2026



August 3, 2026



August 3, 2026 showing the trees growing in the tennis courts both of which will be removed.



August 3, 2026 Showing the tennis courts and basketball courts



August 3, 2026 showing the tennis courts to be removed



August 3, 2026 showing the basketball courts to be resurfaced



August 3, 2026 showing the overgrown area and entrance at the bridge to the park



August 3, 2026 showing the baseball field



August 3, 2026

City of Waterbury

Department of Public Works

Memorandum

To: Board of Aldermen

From: Mark Lombardo, Deputy Director of Public Works M.L.

Date: October 6, 2026

Re: **Board of Aldermen Approval Request / DPW Executive Summary** – On Call Tree Service Agreement between the City of Waterbury and Hillview Property Maintenance; RFP 8890

The Department of Public Works, requests your approval of the above-referenced agreement between the City of Waterbury and Hillview Property Maintenance.

There were four proposals that responded to RFP 8890 that were received by DPW. The four proposals were from Cipully Tree Service, LLC, Paulo Landscaping & Tree Removal, LLC, Hillview Property Maintenance and J&J Brothers, LLC. A selection committee was formed to review each of the respondent's experience, expertise and value-added services. Committee members were Mark Lombardo, Deputy Director, John Kollar, Supervisor of Parks and Chris Mauro, Golf Course Superintendent.

The selection committee met to complete the evaluation process and make a selection. The Selection Committee voted unanimously to award an On Call Tree Services Agreement to Hillview Property Maintenance.

Under this agreement, Hillview Property Maintenance will provide and perform maintenance as needed by the City of Waterbury. This is a one-year agreement and as an On-Call Agreement, there is no cost to the City associated with entering into the agreement. Costs will be as identified in any issued Task Orders and Purchase Orders in accordance with the On-Call Agreement.

All services requested under this agreement will be authorized through Task Orders and Purchase Orders following the rates and fees set forth in Contractor's Price Proposal, which has been incorporated into the agreement as part of Attachment A (see attached agreement). Each Task Order will set out, on a project by process basis, the desired scope of work, monetary terms and time of performance for such work, plus all other pertinent project specific information.

Included herewith is the *Disclosure and Certification of Obligations Affidavit Regarding Outstanding Obligations to the City of Waterbury* submitted by Hillview Property Maintenance in connection with this project and a copy of the Tax Clearance issued by the Office of Tax Collections.

Accordingly, attached are five (5) copies of the proposed contract for your review and consideration, plus one (1) copy to serve as 'record copy' for the City Clerk's Office.

Thank you.

cc. Attorney Lynn McHale, Staff Attorney, Office of the Corporation Counsel

MAINTENANCE SERVICES AGREEMENT
RFP No. 8890
for
ON-CALL TREE SERVICES
between
The City of Waterbury, Connecticut
and
HILLVIEW PROPERTY MAINTENANCE LLC

THIS AGREEMENT, effective on the date signed by the Mayor, is by and between the CITY OF WATERBURY, City Hall, 235 Grand Street, Waterbury, Connecticut 06702 (the "City") and HILLVIEW PROPERTY MAINTENANCE LLC, located at 172 Burlington Rd, Harwinton, CT 06791-2008, a State of Connecticut duly registered domestic limited liability company (the "Contractor").

WHEREAS, the Contractor submitted a proposal to the City responding to **Request for Proposal ("RFP") Number 8890 for ON-CALL TREE SERVICES**; and

WHEREAS, the City accepted the Contractor's proposal for **RFP No. 8890**; and

WHEREAS, the City desires to obtain the Contractor's services pursuant to the terms, conditions and provisions set forth in this agreement (the "Project").

NOW THEREFORE, THE PARTIES AGREE AND COVENANT AS FOLLOWS:

1. **Scope of Services**. The Contractor shall furnish all of the labor, services, equipment, materials, supplies, transportation, and incidentals necessary to complete the Project as specified in this agreement (also referred to herein as "Contract") and such shall be completed in a satisfactory manner, as reasonably determined by the City. All labor, services, equipment, materials, supplies, transportation, and incidentals shall comply with **(i)** any and all applicable local, state and federal laws, statutes, ordinances, rules and regulations, including without limitation all notice requirements thereunder, and **(ii)** generally accepted professional standards.

1.1. The Project consists of **ON-CALL TREE SERVICES** as detailed and further described in the proposal documents in **Attachment A** and are hereby made material provisions of this Contract. **Attachment A** shall consist of the following, which are attached hereto, are acknowledged by the Contractor as having been received, or otherwise hereby incorporated by reference as noted below, and all are made a part hereof:

1.1.1 RFP Number 8890 (acknowledged by the Contractor as having been received and incorporated by reference);

1.1.2 **Addendum #1 to RFP Number 8890**, dated August 25, 2026 and consisting of 8 pages (attached hereto);

1.1.3 Contractor's Proposal, consisting of 21 pages, submitted in response to **RFP Number 8890**, and Contractor's Price Proposal, dated August 31, 2026 and consisting of 3 pages (all attached hereto);

1.1.4 Certificates of Insurance (attached hereto);

1.1.5 Performance Bond and Payment Bond (incorporated by reference);

1.1.6 Special Conditions (Article 1 – Article 22) consisting of 6 pages (attached hereto);

1.1.7 General Conditions (Article 1 – Article 113) consisting of 35 pages (attached hereto);

1.1.8 Technical Specifications, RFP Attachment F, consisting of 5 pages (attached hereto);

1.1.9 Annual Statement of Financial Interests; Disclosure and Affidavit Re: Outstanding Obligations to the City; Debarment Certification; Corporate Resolution, Non-Collusion Affidavit (incorporated by reference);

1.1.10 Any and all amendment(s) and Change Orders issued by the City after execution of Contract (incorporated by reference);

1.1.11 All applicable Federal, State and local statutes, regulations, charter and ordinances (incorporated by reference); and

1.1.12 All permits (including, but not limited to, City of Waterbury Building permit(s)) and licenses (incorporated by reference).

1.2. The entirety of **Attachment A, Attachment B-1,** plus this executed instrument are together deemed the Contract Documents (hereinafter collectively referred to as "Contract Documents"). The City's record copy of the Contract Documents shall control and shall be effective and binding on the Contractor. In the event that any provision in the Contract Documents conflict with any other provision therein, the provision in the component part of the Contract Document first enumerated below shall govern over any other component part which follows it numerically.

1.2.1 Federal, State, and local laws, regulations, charter and ordinances

1.2.2 Contract Amendment(s) and Change Orders
1.2.3 Contract
1.2.4 Contractor's response to **RFP Number 8890** and Contractor's Price Proposal
1.2.5 Special Conditions
1.2.6 General Conditions
1.2.7 Technical Specifications

1.3. Task Order Development. The parties hereto agree that the City, through its Using Agency (i.e., City Department), may request from the Contractor at any time during the term of this Agreement a proposal to perform services pertaining to **On-Call Tree Service** that shall be completed within the Contract Time of this Agreement and as further provided in the applicable Task Order(s) and agreed to by the Contractor. The Using Agency shall issue for the Contractor's review, comment and approval a Task Order that:

1.3.1 assigns a Task Order number;
1.3.2 provides a general description of the Task Order project;
1.3.3 provides the time by which all work under the Task Order shall be completed;
1.3.4 proposes a not to exceed cost to perform all work under the Task Order with compensation being based upon the hourly rates provided in the Contractor's response to the City's **RFP Number 8890**;

1.4 The parties hereto agree that no work shall commence under a Task Order until and unless it has been fully executed by the Contractor (through its Project Manager) and by the City (through the Department Head of the Using Agency) and a City Purchase Order for said work has been issued.

1.5 Task Order Process. The parties hereto agree that for all Task Orders approved in writing by the City's Using Agency:

1.5.1 The Using Agency shall process a requisition with the City's Finance Department for each specific Task Order;
1.5.2 The Using Agency shall not issue a Notice to Proceed with the Task Order work to the Contractor until and unless the City issues a Purchase Order for such work; and
1.5.3 The Contractor shall provide invoices to the Using Agency on a monthly basis for services rendered under each Task Order during the period in question and shall include therewith a narrative detailing the services rendered during the period in question and any further information requested by the Using Agency.

2. Representations Regarding Qualification and Accreditation. The Contractor represents that its employees are licensed to perform the scope of work set forth in this Contract.

The Contractor further represents that its employees have the requisite skill, expertise and knowledge necessary to perform the scope of work required under the terms of this Contract, including any supplementary work and the City relies upon these.

2.1. Representations regarding Personnel. The Contractor represents that it has, or will secure at its own expense, all personnel required to perform the services under this Contract. Such personnel shall not be employees of or have any contractual relationship with the City, unless use of City employees or of personnel having a contractual relationship with the City is approved in writing. As set forth above, all the services required hereunder shall be performed by the Contractor or under its supervision and all personnel engaged in the work shall be fully qualified and shall be authorized or permitted under state or local law to perform such services.

2.2. Representations regarding Qualifications. The Contractor hereby represents that, to the extent required by Federal, State and Local statutes, regulations, codes, ordinances, and policies, that the Contractor and/or its employees be licensed, certified, registered, or otherwise qualified, the Contractor and all employees providing services under this Contract, are in full compliance with those statutes, regulations and ordinances. Upon City request, the Contractor shall provide to the City a copy of the Contractor's licenses, certifications, registrations, etc.

3. Responsibilities of the Contractor. All data, information, etc. given by the City to the Contractor and/or created by the Contractor shall be treated by the Contractor as proprietary to the City and confidential unless the City agrees in writing to the contrary and shall be used solely for the purposes of providing services under this agreement. The Contractor agrees to forever hold in confidence all files, records, documents and other information which may come into the Contractor's possession during the term of this agreement, except where a disclosure is expressly stated as a requirement of this agreement. Notwithstanding the foregoing, where a Contractor disclosure is required to comply with statute, regulation, or court order, the Contractor shall provide prior advance written notice to the City of the need for such disclosure. The Contractor agrees to properly implement the services required in the manner herein provided. The Contractor shall, in addition to any other responsibilities set forth in this Contract and the Schedules and Attachments hereto, perform the following coincident with the performance of this Contract:

3.1. Use of City Property. To the extent the Contractor is required to be on City property to render its services hereunder, the Contractor shall have access to such areas of City property as the City and the Contractor agree are necessary for the performance of the Contractor's services under this agreement (the "Site" or the "Premises") and at such times as the City and the Contractor may mutually agree.

3.2. Working Hours. Contractor's Working hours shall be 24 hours/7 days a week as needed by the City.

3.3. Cleaning Up. To the extent the Contractor is required to be on City property to render its services hereunder, the Contractor shall at all times keep the premises free from accumulation of waste materials or rubbish caused by Contractor, its employees or subcontractors, and at the completion of the work shall remove all rubbish from and about the project and all tools, scaffolding and surplus materials and shall leave the Premises "broom clean" or its equivalent, unless more exactly specified. In case of dispute, the City may remove the rubbish and charge the cost to the Contractor.

3.4. Publicity. Contractor agrees not to deliberately disclose the fact that the City has entered into or terminated this Contract or disclose any of the terms of the Contract or use the City's name in connection with any publicity, unless the City gives prior written consent to such use of the City's name in each instance.

3.5. Standard of Performance. All labor, services, equipment, materials, reports, plans, specifications, drawings, deliverables, incidentals, etc., either at the Premises or intended for it, shall conform in all respects with the requirements of this agreement, and shall be the best obtainable from the crafts and trades. In all cases, the labor, services, equipment, materials, reports, plans, specifications, drawings, deliverables, incidentals, etc. shall be equal to or better than the grade specified, and the best of their kind that is obtainable for the purpose for which they are intended.

3.5.1 The standard of care and skill for all services performed by the Contractor shall be that standard of care and skill ordinarily used by other members of the Contractor's profession practicing under the same or similar conditions at the same time and in the same locality. The Contractor's services rendered hereunder shall be rendered completely and by qualified personnel in accordance with standard industry practice.

3.6. Contractor's Employees. The Contractor shall at all times enforce strict discipline and good order among its employees, and shall not employ any unfit person or anyone not skilled in the work assigned.

3.7. Due Diligence Obligation. The Contractor acknowledges its responsibilities to examine and to be thoroughly familiar with the City's RFP documents, including, but not limited to the specifications, and any addenda thereto. The Contractor hereby warrants and represents that prior to the submission of its proposal during the RFP process, it reviewed or was afforded opportunity, by the City, to review all physical items, facilities, services or functions essential to the satisfactory performance of the services required ("Due Diligence") and thereby certifies that all such items facilities, services or functions are included in this agreement and thereby warrants that:

3.7.1 it conducted or had opportunity to conduct all Due Diligence prior to the submission of its proposal and, accordingly, any additional costs, services or products resulting from the failure of the Contractor to complete Due Diligence prior to submission of its proposal shall be borne by the Contractor. Furthermore

the Contractor had the opportunity during the RFP process to ask questions it saw fit and to review the responses from the City;

3.7.2 its failure or omission to make investigation and verification of data shall, in no way, be cause for future claim of ignorance of such data or conditions nor shall such failure to investigate and verify be the basis for any claim whatsoever, monetary or otherwise;

3.7.3 it is solely responsible for resolving any issues resulting from the failure to conduct Due Diligence and shall assume any costs that may result during the implementation of the Project, including, but not limited to, adherence to specifications and pricing for the Project.

3.7.4 it was responsible for specifying any changes and disclosing any new costs prior to the submittal of its proposal. Thus, in the event any changes or costs are disclosed by the Contractor, or otherwise required, during the performance of its services, the sole responsibility for any modification, delay and cost of such changes shall reside with the Contractor.

3.7.5 has familiarized itself with the nature and extent of the Contract Documents, Work, locality, and with all local conditions and Federal, State and Local laws, ordinances, rules and regulations that in any manner may affect cost, progress or performance of the Work;

3.7.6 has given the City written notice of any conflict, error or discrepancy that the Contractor has discovered in the City's RFP documents and other documents for **RFP Number 8890** (collectively "Proposal Documents"); and

3.7.7 agrees that the Proposal Documents are sufficient in scope and detail to indicate and convey understanding of all terms and conditions for performance of the Work.

3.8. Safety. Contractor shall perform all work in full compliance with Local, State and Federal health and safety regulations. All work hereunder shall be performed in a safe manner. Contractor shall immediately correct any dangerous condition caused by or resulting from its work. If it fails to correct, or to act diligently to correct, any condition which City reasonably believes to be a hazard to persons or property, then immediately upon oral or written notice to any supervisory or similar personnel of Contractor, City may, but shall not be required to, correct same at Contractor's expense. City shall confirm in writing any oral notice given within five (5) days thereafter.

3.9. Permits and Licenses. Unless expressly stated to the contrary in Section 1 of this Contract and **Attachment A**, the Contractor shall secure and obtain all permits and all licenses required, or necessary, or prudent for the performance of the Contractor's obligations under this Contract and for the City's occupancy, use, and operation of the

Project.

3.10. Manufacturer's Directions. Where it is required in this Contract that materials, products, processes, equipment or the like be installed or applied in accord with manufacturer's directions, specifications or instructions, it shall be construed to mean that the said application or installation by the Contractor shall be in strict accord with printed instructions furnished by the manufacturer of the material concerned for use under conditions similar to those at the Project site. Except as may be otherwise required in Attachment A, one (1) copy of such instructions shall be furnished to the City.

3.11. Review by the City. The Contractor shall permit the City and the City's duly authorized representatives and agents to review, at any time, all work performed under the terms of this Contract at any stage of the Project.

3.12. Records Maintenance. The Contractor shall maintain or cause to be maintained complete records documenting compliance with its obligations under the Connecticut General Statutes, the regulations of the Commission on Human Rights and Opportunities, and this Contract, including records of good-faith-efforts, subcontractor solicitations, bids received, awards, payments, documents relative to charges, costs, expenses fees, alleged breaches of contract, settlement of claims or other matters pertaining to the Contractor's demand for payment, workforce information, certifications, correspondence and filings with the Commission on Human Rights and Opportunities, for the period required by applicable law and regulations of the Commission on Human Rights and Opportunities.

3.13. Reporting Requirement. The Contractor shall deliver periodic, written reports to the City's Using Agency setting forth **(i)** the issue date of the report, **(ii)** the time period covered by the report, **(iii)** a brief description of the work and services completed by the Contractor and/or delivered by the Contractor during the time period covered by the report, **(iv)** expressed as a percentage of the total work and services required under this contract, the percentage of the total work represented by the work and services described in subsection iii above, **(v)** expressed as a percentage of this contract's Section 6 total compensation, the percentage of the total compensation represented by the work and services described in subsection iii above, **(vi)** the Contractor's declaration as to whether the entirety of the Contractor's work and services required in this Contract will be, or will not be, completed within the Contract's Section 6 total compensation amount, and **(vii)** any and all additional useful and/or relevant information. Each report shall be signed by a duly authorized employee of the Contractor.

NOTE: the Contractor's failure to deliver any report required herein shall be deemed a material breach of this Contract, the City hereby reserving the right to exercise all available legal remedy(ies) to address said breach.

3.14. FUNDING REQUIREMENTS. The Contractor is hereby put on notice that this Contract may be considered a public works contract, is anticipated to be funded in whole

or in part by State of Connecticut Local Capital Improvement Program ("LoCIP") and/or TOWN AID ROAD PROGRAM (TAR) funds, and Contractor shall comply with all LoCIP and TAR requirements, including but not limited to State of Connecticut Set-Aside requirements (See Section 12 of this Contract), Commission on Human Rights and Opportunities (CHRO) requirements (See Section 13 of this Contract), as may be applicable, and **Attachment B-1** "Non-Discrimination Contract Language", dated REV.07012026, attached hereto and incorporated herein.

4. Responsibilities of the City. Upon the City's receipt of the Contractor's written request, the City will provide the Contractor with documents, data and other materials the City agrees are necessary and appropriate to the services to be performed by the Contractor hereunder and the City will endeavor to secure, where feasible and where the City agrees it is necessary and appropriate, materials or information from other sources requested by the Contractor for the purpose of carrying out the services under this Contract.

4.1. The City may, in its sole discretion, designate person(s) to act as the City's Project Engineer(s) and/or Manager(s) and the City may, in its sole discretion, define such person(s) authority and responsibilities.

4.2. The City reserves the right to **(i)** perform work related or unrelated to the Project with the City's own forces adjoining, adjacent to, or in the vicinity of, the Project site and/or **(ii)** let separate contracts related or unrelated to the Project for work and services adjoining, adjacent to, or in the vicinity of, the Project site. In such event, the Contractor shall afford all such parties reasonable opportunity for storage of materials and equipment and for the uninterrupted provision and delivery of such parties' work and/or services. The Contractor shall cooperate with such parties and in the case of a dispute, the decision of the City shall be complied with by all.

5. Contract Time. The Contractor shall reach Final Completion of all work and services required under this contract within **Three Hundred Sixty-Five (365) consecutive calendar days** of the City's written Notice to Proceed ("Contract Time").

5.1. On a monthly basis, the Contractor shall deliver to the City a written status report setting forth an analysis and critique of the Contractor's compliance with said schedule.

5.2. Delay Damages. Time is and shall be of the essence for all Project milestones, the Substantial Completion Date and the Final Completion Date for the Project. The Contractor further agrees that the Project shall be prosecuted regularly, diligently and uninterruptedly and at such rate of progress as will insure full completion thereof within the Contract Time stated above. It is expressly understood and agreed, by and between the Contractor and City, that the Contract Time is reasonable for the completion of the Project.

5.2.1. The Contractor shall pay to the City the sum of the greater of **ONE HUNDRED DOLLARS AND ZERO CENTS ($100.00)** per calendar day for

each and every calendar day for which the Contractor is in default in completing the work beyond the Final Completion Date, Substantial Completion Date, Milestones and Phase Completion Dates, as set forth in Section 5, or the actual damages incurred by the City caused by the delay. The preceding sum is hereby agreed upon not as a penalty, but as delay damages for the delay that the City shall suffer due to such default.

5.2.2. The City shall have the right to recover all damages pursuant to any remedy at law or equity including but not limited to deducting the amount of any such damages from any monies due the Contractor under this Contract. The Contractor understands that if the entire Work or of any portion of the Work that the City has agreed to accept separately, if any, is not attained by the applicable completion dates as set forth in the entire Section 5, the City will suffer damages, which are difficult to specify accurately and ascertain. Delay damages based upon delay shall be assessed to compensate the City for all actual loss sustained by the delay, including, but not limited to, loss of use, increased cost of material or services to complete the project, loss of State funding, all other actual expense, and all other damages allowed by law, including attorney's fees.

5.3 No Damage for Delay. In no event shall the Contractor be entitled to any compensation or recovery of any damages in connection with any Delay, including, without limitation, consequential damages, lost opportunity damages, attorney's fees or other, similar remuneration. The City's exercise of any of its rights or remedies under the Contract Documents, including without limitation, ordering changes in the Work, or directing suspension, rescheduling or correction of the Work, regardless of the extent or frequency of the City's exercise of these rights has been contemplated by the parties and shall not be construed as an exception.

6. Compensation. The City shall compensate the Contractor for satisfactory provision of all of the goods and services set forth in this Contract as follows in this Section 6. No claims for additional compensation will be considered for conditions made known to the Contractor prior to bidding. No claims for additional compensation will be considered on account of failure of the Contractor to completely inform itself as required herein above.

6.1. Fee Schedule. The fee payable to the Contractor shall be in accordance with the Contractor's response to **RFP No. 8890**, and Contractor's Price Proposal, dated August 31, 2026, and all applicable fully executed Task Orders and issued Purchase Orders.

6.2. Limitation of Payment. Compensation to the Contractor is limited to those fees set forth in Section 6.1. above and is further limited to work **(i)** performed in fact, **(ii)** conforming with this Contract, and **(iii)** accepted in writing by a duly authorized City employee. Such compensation shall be paid by the City upon its review and approval of the Contractor's invoices for payment and review of the Contractor's work, services, reports, plans, specifications, deliverables, etc. rendered and the compensation sought therefore in a form and with detail and clarity acceptable to the City.

6.2.1 Funding. In the event this Contract is funded, in whole or in part, by Federal and/or State monies, grants, loans, etc, all City payment(s) shall fully comply with all relevant Federal and State statutes and regulations. In the event this Contract is 100% funded by Federal and/or State monies, grants, loans, etc., the aggregate sum of all City payments shall not exceed the aggregate sum of such funding.

6.2.2 The Contractor and its affiliates are hereby provided with notice that the City reserves the right, in the City's sole discretion, to offset, withhold, or otherwise reduce City payment(s) to the Contractor, in an amount equaling the sum or sums of money the Contractor and/or its affiliates is/are, or become delinquent or in arrears on, regarding the Vendor's and/or its affiliates real and personal property taxes and other payment obligations to the City.

6.2.3 No Payment for Lost Profits. In no event shall the City be obligated to pay or otherwise compensate the Contractor for any lost or expected future profits.

6.2.4 Retainage. At the City's sole discretion, it hereby reserves the right to withhold as retainage five percent (5.0 %) of any payment (or monetary sum otherwise required by law) owed to the Contractor to be withheld from payments to the Contractor otherwise payable to the Contractor until such time as the Contractor's work and services to be provided under this Contact are fully completed and accepted in writing by the City. The retainage does not does not include additional sums that the City may withhold due to the Contractor's failure to comply with provisions of this Contract.

6.2.4.1 On public works contracts valued at one million dollars or more or for projects for which a construction manager has entered into a public works contract providing for a guaranteed maximum price valued at one hundred fifty thousand dollars or more, C.G.S. § 46a-68e requires that the awarding agency "shall withhold two percent of the total contract price per month from any payment made to such contractor until such time as the contractor has submitted all compliance reports required by the Commission." The term "awarding agency" is defined by C.G.S. § 4a-60g as "a state agency or political subdivision of the state, including a municipality or quasi-public agency.

6.2.4.2 Contractor is hereby put on notice that CHRO's written approval is required prior to the City releasing withheld retainage per Section 6.2.4.1.

6.2.4.3 The two percent (2.0 %) provided in Section 6.2.4.1 is part of the five percent (5.0 %) retainage provided in Section 6.2.4, not in addition to such retainage.

6.3. Review of Work. The Contractor shall permit the City to review, at any time, all work performed under the terms of this Contract at any stage of the work. The Contractor shall maintain or cause to be maintained all records, books or other documents relative to charges, costs, expenses, fees, alleged breaches of the agreement, settlement of claims or any other matter pertaining to the Contractor's demand for payment. The City shall not certify fees for payment to the Contractor until the City has determined that the Contractor has completed the work in accordance with the requirements of this Contract.

6.4. Proposal Costs. All costs of the Contractor in preparing its proposal for **RFP No. 8890** shall be solely borne by the Contractor and are not included in the compensation to be paid by the City to the Contractor under this Contract or any other agreement.

6.5. Payment for Services, Materials, Appliances, Employees. The Contractor shall be responsible to the City for the suitability of services, materials and equipment furnished to comply fully with the requirements set forth in this Contract. The Contractor shall promptly pay all employees as their pay falls due, shall pay promptly as they fall due all bills for subcontractors, materials, supplies and services going into the work, and all bills for insurance, bonds, Worker's Compensation coverage, Federal and State Unemployment Compensation, and Social Security charges applicable to this Project. Before final City payment is made, the Contractor shall furnish to the City a sworn, notarized, affidavit stating that all of the foregoing payment obligations have been fully completed.

6.6. Liens. Neither the City's final payment nor any part of the retained percentage, if any, shall become due until the Contractorshall deliver to the City a complete release of all liens arising out of this Contract, or receipts in full in lieu thereof, and, in either case, an affidavit that so far as the Contractor has knowledge or information, the releases and receipts include all the labor and material for which a lien could be filed; but the Contractor may, if any subcontractor refuses to furnish a release or receipt in full, furnish a bond satisfactory to the City, to indemnify it against any lien. If any lien remains unsatisfied after all payments are made, the Contractor shall refund to the City all moneys that the City may be compelled to pay in discharging such a lien, including all costs and a reasonable attorney's fee.

6.7. No Payment for Lost Profits. In no event shall the City be obligated to pay or otherwise compensate the Contractor for any lost or expected future profits.

7. Warranty of the Contractor. Contractor warrants to the City that all materials, supplies, components, equipment, etc. furnished under this Contract shall be new and of good

quality, except as otherwise expressly stated and permitted by the City elsewhere in this Contract. The Contractor warrants that none of its work shall be defective. The Contractor shall be liable to repair and install and/or replace without charge any service, component, equipment or part thereof which is defective or does not conform with this Contract within the greater of (i) **three hundred sixty-five (365)** calendar days after the City delivers its written notice of its acceptance of the Project and statement therein establishing the final completion date, or (ii) that time period or date expressly stated elsewhere in this Contract or **Attachment A**.

7.1. The Contractor further warrants that all materials, supplies, services, components, equipment, reports, plans, drawings, deliverables, incidentals, etc., shall be free from any and all defects caused by faulty design, faulty material or poor workmanship. The Contractor shall supply to the City copies of any written manufacturer's warranties and guarantees. The Contractor's foregoing warranty obligations are in addition to, and not a limitation of, all manufacturer's warranties and guarantees, and any other remedy stated in this contract or otherwise available to the City under applicable law.

8. Passing of Title and Risk of Loss.

8.1. City beneficial use of Project equipment, materials, site-work, etc. prior to the Contractor's final completion of the Project or prior to the City's final payment for the Project shall neither act to vest title in the City nor act to transfer risk of loss from the Contractor to the City. Said title and risk shall pass to the City upon the City's final payment for the Project.

8.2. Contractor and its insurer shall assume the risks of loss or damage to the equipment up to and including the date title passes, except that City shall be responsible for loss or damage caused by City's gross negligence.

8.3. After Project equipment, materials, etc. are delivered to the Project work-site and become operable or functional, the Contractor shall not thereafter remove any such equipment, materials, etc. from the Project work-site without securing the prior written consent of an authorized City Using Agency employee.

9. Indemnification.

9.1. The Contractor shall indemnify, defend, and hold harmless the City, City's Boards, and Board of Education, commissions, agents, officials and employees from and against all claims, suits, damages, losses, judgments, costs and expenses including attorney's fees arising out of or resulting from the delivery of the labor, services, equipment, materials, reports, plans, specifications, design, drawings, deliverables, incidentals, etc. provided that any such claims, suits, damages, losses, judgments, costs or expenses **(i)** are attributable to bodily injury, sickness, disease or death, or to injury to or destruction of tangible property, including the loss of use resulting there from, **(ii)** are alleged to be caused in whole or in part by any willful, intentional, negligent, or reckless

act or omission of the Contractor, its employees, any subcontractor or consultant, anyone directly or indirectly employed by any of them or anyone for whose acts any of them may be liable, regardless of whether or not it is caused in part by a party indemnified hereunder; **(iii)** enforcement action or any claim for breach of the Contractor 's duties hereunder or **(iv)** claim for intangible loss(es) including but not limited to business losses, lost profits or revenue, regardless of whether or not it is caused in part by a party indemnified hereunder.

9.2. In any and all claims against the City, Board of Education or any of City's boards, agents, employees or officers by the Contractor or any employee of the Contractor, any subcontractor or consultant, anyone directly or indirectly employed by any of them or anyone for whose acts any of them may be liable, the indemnification obligation under Paragraph 9 above, shall not be limited in any way by any limitation on the amount or type of damages, compensation or benefits payable by or for the Contractor or any subcontractor under Worker's Compensation Acts, disability benefit acts or other employee benefit acts.

9.3. The Contractor understands and agrees that any insurance required by this Contract, or otherwise provided by the Contractor, shall in no way limit the responsibility to indemnify, defend, keep and hold harmless the City, the Board of Education, any of City's boards, agents, employees as provided in this Contract.

9.4. The Contractor expressly understands and agrees that any performance bond or insurance protection required by this Contract, or otherwise provided by the Contractor, shall in no way limit the responsibility to indemnify, keep and save harmless and defend the City and the City's boards, agents, employees or officers as provided herein.

9.5. Royalties and Patents. The Contractor shall, for all time, secure to the City the free and undisputed right to the use of any and all patented articles and methods used in the work and shall defend at Contractor's own expense any and all suits for infringement or alleged infringement of such patents, and in the event of adverse award under patent suits, the Contractor shall pay such awards and hold the City harmless in connection with any patent suits that may arise as a result of installations made by the Contractor and as to any award made thereunder.

9.6. In the event this Contract and/or the Contractor's, or its subcontractor, work and services provisioned hereunder is/are subject to the provisions of any Federal or State statute or regulations, or the City Charter or City Ordinance, the Contractor shall indemnify, defend and hold harmless the City from any fine, penalty or other amounts imposed on the City under said statutes, regulations, Charter or Ordinances, if caused by Contractor, or its subcontractor, omission or commission.

10. Contract Bonds. In the City's sole discretion, the City may elect to require the Contractor to furnish to the City a performance bond or payment bond or both, each bond written for a penal sum equaling the "Total Compensation" amount of each Task Order, in a form and

with a surety, acceptable to the City. If the City elects to require such bonds, the City shall include such requirement in any Task Order for which such bonds will be required by the City. The Contractor shall then furnish to the City any required bond prior to the issuance of the corresponding Purchase Order by the City. The bonds shall continue in effect for the greater of **(i)** the warranty period set forth in Section 7 of this Contract, or **(ii)** 365 calendar days after City delivers its written notice of its acceptance of all projects identified in any fully executed Task Order.

11. Contractor's Insurance.

11.1. The Contractor shall not commence work under this Contract until all insurance required under this Section 11 has been obtained by the Contractor and such insurance has been approved by the City. The Contractor shall not allow any subcontractor to commence work on any subcontract until all insurance required of any such subcontractor has been so obtained and approved by the City. Insurance shall be provided by insurers, satisfactory to the City and authorized to do business in the State of Connecticut, an "A-" Best's Rating and at least a Class VIII or better financial size category as shown in the most current A.M. Best Company ratings.

11.2. At no additional cost to the City, the Contractor shall purchase and maintain the insurance coverages set forth below which shall protect the City from claims which may arise out of or result from the Contractor's obligation under this Contract, whether such obligations are the Contractor's or subcontractor or person or entity directly or indirectly employed by said Contractor or subcontractor, or by any person or entity for whose acts said Contractor or subcontractor may be liable.

11.3. Each insurance policy shall state that the insurance company shall agree to investigate and defend the insured against all claims for damages, even if groundless. If any insurance required herein is to be issued or renewed on a claims made form as opposed to an occurrence form, the retroactive date for coverage shall be no later than the commencement date of this Contract and shall provide that in the event of cancellation or non-renewal, the discovery period for insurance claims ("Tail Coverage") shall be available for at least 60 months.

11.4. The following policies with stated limits shall be maintained, in full force and effect, at all times during which the services are to be performed by the Contractor:

11.4.1 General Liability Insurance:
$1,000,000.00 each Occurrence
$2,000,000.00 General Aggregate
$2,000,000.00 Products and Completed Operations Aggregate

11.4.2 Automobile Liability Insurance:
$1,000,000.00 combined single limit (CSL)
Any Auto, All Owned and Hired Autos

11.4.3 Workers' Compensation:
Statutory Limits within the State of Connecticut:
Employers' Liability:
$1,000,000.00 EL Each Accident
$1,000,000.00 EL Disease Each Employee
$1,000,000.00 EL Disease Policy Limit

11.4.4 Excess/Umbrella Liability Insurance:
$1,000,000.00 each Occurrence
$1,000,000.00 Aggregate

11.5. Failure to Maintain Insurance: In the event the Contractor fails to maintain the minimum required coverage as set forth herein, the City may at its option purchase same, and offset the Contractor's invoices for the cost of said insurance.

11.6. Cancellation: The City of Waterbury shall receive written notice of cancellation from the Contractor at least thirty (30) calendar days prior to the date of actual cancellation, regardless of the reason for such cancellation.

11.7. Certificates of Insurance: All Contractor's Insurance except Workers' Compensation shall be endorsed to add the City of Waterbury and its Board of Education as additional insured and provide waiver of subrogation on all policies. The insurance afforded the additional insured shall be primary and non-contributory insurance and the coverage and limits provided under the Contractor's policies shall not be reduced or prorated by the existence of any other insurance applicable to any loss the additional insured may have suffered. Prior to the execution of this Contract by the City, the Contractor shall furnish to the City, subject to City approval, certificate(s) of insurance and Additional Insured Endorsement and Waiver of Subrogation Endorsement verifying the above coverages, including the naming of the City of Waterbury, as follows: **"The City of Waterbury and its Board of Education are listed as Additional Insured on a primary and non-contributory basis on all policies except Workers' Compensation. All policies shall include a Waiver of Subrogation."** The City's RFP Number must be shown on the certificate of insurance to assure correct filing. The Contractor must supply replacement/renewal certificates at least 30 days prior to the expiration of the policy(ies). Said certificates shall contain a provision that coverage afforded under the policies shall not be cancelled or reduced for any reasons unless notice of than thirty (30) calendar days has been mailed to the City's Using Agency and a copy to the City's Office of Corporation Counsel, 235 Grand Street, Waterbury, CT 06702.

11.8. No later than thirty (30) calendar days after Consultant receipt, the Consultant shall deliver to the City a copy of the Consultant's insurance policies and endorsements and riders.

11.9. If any policy is written on a "Claims Made" basis, the policy must be continually renewed for a minimum of two (2) years from the completion date of this contract. If the policy is replaced and/or the retroactive date is changed, then the expiring policy must be endorsed to extend the reporting period for claims for the policy in effect during the contract for two (2) years from the completion date.

11.10. Original, completed Certificates of Insurance must be presented to the City of Waterbury prior to contract issuance. Contractor agrees to provide replacement/renewal certificates at least thirty (30) calendar days prior to the expiration date of the policies. Should any of the above described policies be cancelled, limits reduced or coverage altered, thirty (30) calendar days written notice must be given to the City of Waterbury.

12. Conformance with Federal, State and Other Jurisdictional Requirements. By executing this Contract, the Contractor represents and warrants that, at all pertinent and relevant times to the Contract, it has been, is and will continue to be in full compliance with all applicable statutes, acts, ordinances, guidelines, resolutions, orders, judgments, decrees, injunctions, rules, and regulations of all government authorities applicable to performance by the Contractor of services hereunder, including those having jurisdiction over its registration and licensing to perform services hereunder; including, but not limited to, the following: EQUAL EMPLOYMENT OPPORTUNUTY; COPELAND ANTI-KICKBACK ACT, as supplemented in the Department of Labor Regulations (29 CFR, Part 3); DAVIS BACON ACT as supplemented by Department of Labor Regulations (29 CFR Part 5); Section 103 and 107 of the Contract Work Hours and Safety Standards Act, as supplemented by the Department of Labor Regulations (29 CFR Part 5); the HOUSING and COMMUNITY DEVELOPMENT ACT of 1974, as amended, TITLE 31 and Section 12-430(7) of the State of Connecticut General Statutes. All applicable sections of the City Charter and Code of Ordinances are incorporated by reference made a part hereof.

12.1. Taxes-Federal, State and Local. The City is exempt from Federal Excise and Transportation, State and Local Sales and Use Taxes, including without limitation, taxes that would otherwise be imposed upon the Contractor for transactions required or necessitated hereunder between it and its subcontractors, suppliers, etc. The Contractor remains liable, however, for any applicable tax obligations it incurs. Moreover, the Contractor represents that the bid and pricing contained in this Contract do not include the amount payable for said taxes.

12.2. Labor and Wages-Federal and State. The Contractor and its subcontractors shall conform to Federal and State of Connecticut labor laws, and all other laws, ordinances, and legal requirements affecting the work in Connecticut.

12.2.1 The Contractor is aware of, and shall comply with, the provisions of Title 31, §53 of the Connecticut General Statutes, latest revision (the "Act"), concerning the payment of minimum wages for work on public facilities. The provisions of the Act are hereby incorporated by reference and made a part of this Contract. The Act provides that the Connecticut prevailing wage law applies

to certain remodeling, refurbishing, alteration, repair and new construction. The wages paid on an hourly basis to any person performing the work of any mechanic, laborer or worker on the work herein contracted to be done and the amount of payment or contribution paid or payable on behalf of each such person to any employee welfare fund, as defined in Con. Gen. Stat. 31-53(i), shall be at a rate equal to the rate customary or prevailing for the same work in the same trade or occupation in the town in which such public works project is being constructed. Any contractor who is not obligated by agreement to make payment or contribution on behalf of such persons to any such employee welfare fund shall pay to each mechanic, laborer or worker as part of such person's wages the amount of payment or contribution for such person's classification on each pay day.

12.2.2 The Contractor is aware of, and shall comply with, the provisions of both the Federal Davis-Bacon Act and the Federal American Recovery and Reinvestment Act of 2009, the provisions of both acts hereby incorporated by reference and made a part of this Contract. The Federal Davis-Bacon Act provides that Federal wage rate laws apply to certain federally funded contracts. The American Recovery and Reinvestment Act ("ARRA") provides that Federal wage rate laws apply to all ARRA funded contracts regardless of the contract's dollar value.

12.3. Compliance with Chapters 34, 38, and 39 of the Code of Ordinances of the City. By executing this Contract, the Contractor represents and warrants that, at all pertinent and relevant times to the Contract, it has been, is and will continue to be in full compliance with the provisions of Chapters 34, 38, and 39 of the Code of Ordinances of the City and well as any other relevant provisions of the Charter and the Code of Ordinances.

12.4. Compliance with CONN. GEN. STAT. § 4a-60g, amended by Public Act 25-168, and, as may be amended from time to time.

12.4.1 Definitions – For purposes of Section 12.4 and Section 13.3 of this Contract:

i. "Awarding agency" means a state agency or political subdivision of the state, including a municipality or quasi-public agency.

ii. "Minority business enterprise" means any small contractor (A) fifty-one per cent or more of the capital stock, if any, or assets of which are owned by a person or persons who (i) exercise operational authority over the daily affairs of the enterprise, (ii) have the power to direct the management and policies and receive the beneficial interest of the enterprise, (iii) possess managerial and technical competence and experience directly related to the principal business activities of the enterprise, and (iv) are members of a minority, as defined in subsection (a) of section 32-9n, or are individuals with a disability, or (B) which is a nonprofit

corporation in which fifty-one per cent or more of the persons who exercise operational authority over the enterprise, (i) possess managerial and technical competence and experience directly related to the principal business activities of the enterprise, (ii) have the power to direct the management and policies of the enterprise, and (iii) are members of a minority, as defined in this subsection, or are individuals with a disability.

iii. "Public works contract" means any agreement (A) for construction, rehabilitation, conversion, extension, demolition or repair of changes or improvements in real property, and (B) that is financed in whole or in part by the state, including, but not limited to, matching expenditures, grants, loans, insurance or guarantees, where such funding equals one hundred fifty thousand dollars or more.

iv. "Small contractor" means (A) any contractor, subcontractor, manufacturer, service company or corporation that (i) maintains its principal place of business in the state, and (ii) is registered as a small business in the federal database maintained by the United States General Services Administration, as required to do business with the federal government, or (B) any nonprofit corporation that (i) maintains its principal place of business in the state, (ii) that had gross revenues not exceeding twenty million dollars in the most recently completed fiscal year prior to such application, and (iii) that is independent.

12.4.2 The Contractor and subcontractor shall comply with the specific requirements of the State of Connecticut Set Aside Program, CONN. GEN. STAT. § 4a-60g, **amended by Public Act 25-168, and as may be amended from time to time,** if the public works contact awarded to the Contactor is funded as provided in 12.4.3 below.

12.4.3 The Contactor shall be subject to the following set-aside requirements if the public works contact, is funded in whole or in part by the State of Connecticut, and is equal to, or in excess of ONE HUNDRED FIFTY THOUSAND DOLLARS ($150,000.00).

12.4.4 Set-Aside requirements – Any contractor awarded a public works contract, on the basis of competitive bidding procedures, shall comply with the following Set –Aside requirements:

i. This contract is subject to state contract compliance requirements, including nondiscrimination statutes and spending allocation goals. There is $TBD in state-funding for this project. State law requires project-specific goals be set for this project based on the project's needs and available Small Business Enterprises ("SBEs") and Minority Business Enterprises ("MBEs"). The SBE goal for this project is N/A. The MBE goal

for this project is N/A. The selected contractor must demonstrate good faith effort to meet the spending allocation goals.

12.4.5 No Affiliated Subcontracting to Satisfy Goal. The Contractor shall not subcontract with an affiliated person or entity in violation of Conn. Gen. Stat. § 4a-60g. An affiliated contractor or subcontractor shall not be credited toward the City's spending-allocation goals where such credit is prohibited by law.

12.4.5.1 Changes in Subcontractors. The Contractor shall not replace, terminate, materially reduce the work of, or otherwise alter the participation of a small contractor or minority business entity identified for purposes of satisfying a spending allocation goal without providing the City with prior written notice and satisfying all requirements imposed by the Commission on Human Rights and Opportunities and applicable law. The Contractor shall document good-faith efforts to replace any subcontractor with another qualified certified contractor where required by law or the Commission on Human Rights and Opportunities.

12.4.6 Failure of the Contractor or subcontractor to comply with the State of Connecticut Set-Aside program requirements, including, but not limited to, good faith efforts plan and compliance report submissions, shall be a material breach of this Contract. If required by the City, the Contractor shall provide the City with evidence of submission and disposition of all required State of Connecticut Set-Aside programs reports.

13. Discriminatory Practices. In performing this Contract, the Contractor shall not discriminate against any employee or applicant for employment, with respect to his or her hire, tenure, terms, conditions or privileges of employment, or any matter directly or indirectly related to employment, because of race, color, sex, age, religious creed, disability, national origin or ancestry, marital status, family status, prior psychiatric treatment, health care, military status or source of income or because of a handicap that is unrelated to the employee's or the applicant's ability to perform the duties of a particular job or position. Subcontracts with each subcontractor shall contain a provision requiring non-discrimination in employment as herein specified. This covenant is required pursuant to §93.04 of the Code of Ordinances of the City and any breach thereof may be regarded as a material breach of this Contract. Said provisions with subcontractors shall require conformity and compliance with all local, state and federal laws, rules and regulations and Executive orders pertaining to discrimination and equal opportunity requirements.

13.1. Discrimination Because of Certain Labor Matters. No person employed on the work covered by this Contract shall be discharged or in any way discriminated against because such person has filed any complaint or instituted or caused to be instituted any proceeding or has testified or is about to testify in any proceeding under or related to the labor standards applicable hereunder to its employer.

13.2. Equal Opportunity. In its execution of the performance of this Contract, the Contractor shall not discriminate and shall comply with applicable laws prohibiting discrimination on the grounds of race, color, religion, sex, national origin or citizenship status, age or handicap. The Contractor agrees to comply with all local, state and federal laws, rules and regulations and Executive orders pertaining to discrimination and equal opportunity requirements, and will require the same of all subcontractors

13.3. Affirmative Action/Nondiscrimination.

13.3.1. Pursuant to CONN. GEN. STAT. § 4a-60, as amended by Public Act 25-168, and as may be amended from time to time, the following are required for every Public Works Contract:

(b) Except as provided in section 10a-151i, every contract to which an awarding agency is a party shall contain the following provisions:

(1) The contractor agrees and warrants that in the performance of the contract such contractor will not discriminate or permit discrimination against any person or group of persons on the grounds of race, color, religious creed, age, marital status, national origin, ancestry, sex, sexual orientation, gender identity or expression, status as a veteran, status as a victim of domestic violence, intellectual disability, mental disability or physical disability, including, but not limited to, blindness, unless it is shown by such contractor that such disability prevents performance of the work involved, in any manner prohibited by the laws of the United States or of the state of Connecticut; and the contractor further agrees to take affirmative action to ensure that applicants with job-related qualifications are employed and that employees are treated when employed without regard to their race, color, religious creed, age, marital status, national origin, ancestry, sex, gender identity or expression, sexual orientation, status as a veteran, status as a victim of domestic violence, intellectual disability, mental disability or physical disability, including, but not limited to, blindness, unless it is shown by such contractor that such disability prevents performance of the work involved;
(2) The contractor agrees, in all solicitations or advertisements for employees placed by or on behalf of the contractor, to state that it is an "affirmative action-equal opportunity employer" in accordance with regulations adopted by the Commission on Human Rights and Opportunities;
(3) The contractor agrees to provide each labor union or representative of workers with which such contractor has a collective bargaining agreement or other contract or understanding and each vendor with which such contractor has a contract or understanding, a notice to be provided by the Commission on Human Rights and Opportunities advising the labor union or workers' representative of the contractor's commitments under this section, and to post copies of the notice in conspicuous places available to employees and applicants for employment;
(4) The contractor agrees to comply with each provision of this section and sections 46a-68e and 46a-68f and with each regulation or relevant order issued by said commission pursuant to sections 46a-56, 46a-68e, 46a-68f and 46a-86; and
(5) The contractor agrees to provide the Commission on Human Rights and Opportunities with such information requested by the commission, and permit access to pertinent books, records

and accounts, concerning the employment practices and procedures of the contractor as relate to the provisions of this section and section 46a-56.

(c) If the contract is a public works contract, the contractor agrees and warrants that he or she will make good faith efforts to employ minority business enterprises as subcontractors and suppliers of materials on such public works project.

(d) Except as provided in section 10a-151i:

(1) Any contractor who has one or more contracts with an awarding agency or who is a party to a public works contract shall include a nondiscrimination affirmation provision certifying that the contractor understands the obligations of this section and will maintain a policy for the duration of the contract to assure that the contract will be performed in compliance with the nondiscrimination requirements of subsection (b) of this section. The authorized signatory of the contract shall demonstrate his or her understanding of this obligation by (A) initialing the nondiscrimination affirmation provision in the body of the contract, (B) providing an affirmative response in the required online bid or response to a proposal question which asks if the contractor understands its obligations, or (C) signing the contract.

(e) Determination of the contractor's good faith efforts shall include, but shall not be limited to, the following factors: The contractor's employment and subcontracting policies, patterns and practices; the timing and value of bids; affirmative advertising, recruitment and training; technical assistance activities and such other reasonable activities or efforts as the Commission on Human Rights and Opportunities may prescribe that are designed to ensure the participation of minority business enterprises in public works projects.

(f) The contractor shall develop and maintain adequate documentation, in a manner prescribed by the Commission on Human Rights and Opportunities, of its good faith efforts.

(g) The contractor shall include the provisions of subsections (b) and (c) of this section in every subcontract or purchase order entered into in order to fulfill any obligation of a contract with the state, and in every subcontract entered into in order to fulfill any obligation of a public works contract, and such provisions shall be binding on a subcontractor, vendor or manufacturer, unless exempted by regulations or orders of the Commission on Human Rights and Opportunities.

13.3.2. Pursuant to CONN. GEN. STAT. § 4a-60a, as amended by Public Act 23-204, and as may be amended from time to time, the following are required for every Public Works Contract:

(a) Every contract to which an awarding agency is a party, every contract for a quasi-public agency project and every public works contract shall contain the following provisions:

(1) The contractor agrees and warrants that in the performance of the contract such contractor will not discriminate or permit discrimination against any person or group of persons on the grounds of sexual orientation, in any manner prohibited by the laws of the United States or of the state of Connecticut, and that employees are treated when employed without regard to their sexual orientation;

(2) The contractor agrees to provide each labor union or representative of workers with which such contractor has a collective bargaining agreement or other contract or understanding and each vendor with which such contractor has a contract or understanding, a notice to be provided by the Commission on Human Rights and Opportunities advising the labor union or workers' representative of the contractor's commitments under this section, and to post copies of the notice in conspicuous places available to employees and applicants for employment;

(3) The contractor agrees to comply with each provision of this section and with each regulation or relevant order issued by said commission pursuant to section 46a-56;

(4) The contractor agrees to provide the Commission on Human Rights and Opportunities with such information requested by the commission, and permit access to pertinent books, records and accounts, concerning the employment practices and procedures of the contractor which relate to the provisions of this section and section 46a-56; and

(5) Nondiscrimination affirmation provision. The Contractor understands the obligations of this section 13.3 and will maintain a policy for the duration of the Contract to assure that the Contract will be performed in conformance with the nondiscrimination requirements of this section 13.3. The authorized signatory of the Contract shall demonstrate his or her understanding of this obligation by either (A) initialing the nondiscrimination affirmation provision in the body of the Contract, [or] (B) providing an affirmative response in the required online bid or response to a proposal question which asks if the Contractor understands its obligations, or (C) signing the Contract.

14. Good Jobs Ordinance

14.1. Conformance With An Ordinance Concerning The Hiring Of Waterbury Residents On Certain Publicly-Funded Construction Projects.

14.1.1 The Contractors and its Subcontractors shall comply with the specific requirements of "An Ordinance Concerning the Hiring of Waterbury Residents on Certain Publicly-Funded Construction Projects" (the "Good Jobs Ordinance"), as may be amended from time to time and as set forth in Chapter

34 of the Code of Ordinances of the City. While the principal provisions of the ordinance are summarized as set forth in paragraphs C-H below, the Contractor does hereby acknowledge that it has reviewed a copy of the Good Jobs Ordinance and that it has read the Ordinance and that Contractor is familiar with the obligations imposed on the Contractor and each Subcontractor by the Good Jobs Ordinance.

14.1.2 Failure of the Contractor or its Subcontractors to comply with the Good Jobs Ordinance shall be a material breach of this Agreement.

14.1.3 This paragraph shall apply to a Covered Project, as that term is defined in the Good Jobs Ordinance, in the City with a value of $500,000.00 or greater and only to the extent permitted by federal and state law.

14.1.4 Definitions. For purposes of this paragraph:

i. "Administrator" shall be defined as it is in the Good Jobs Ordinance.

ii. "Apprentice" shall be defined as it is in the Good Jobs Ordinance.

iii. "Basic Skilled Worker" shall be defined as it is in the Good Jobs Ordinance.

iv. "Contractor" shall be defined as it is in the Good Jobs Ordinance.

v. "Covered Project" shall be defined as it is in the Good Jobs Ordinance.

vi. "Hiring Goal" shall be defined as it is in the Good Jobs Ordinance.

vii. "Resident" shall be defined as it is in the Good Jobs Ordinance.

viii. "Subcontractor" shall be defined as it is in the Good Jobs Ordinance and shall include the Contractor's direct subcontractor providing construction work and all lower tiered (level) providers of construction work.

14.1.5 Hiring Goals. If this Agreement requires the Contractor to perform work on a Covered Project, the Contractor and each Subcontractor shall have as its hiring goals:

i. at least thirty percent (30%) of its total worker hours performed by City Residents, and

ii. at least twenty-five percent (25%) of construction trade jobs shall go to Apprentices and/or Basic Skilled Workers, and

iii. at least seventy percent (70%) of all "new hires" (as that term is defined in the Good Jobs Ordinance) shall be "economically disadvantaged" individuals (as that term is defined in the Good Jobs Ordinance), and

iv. a minimum of five percent (5%) of the construction workforce labor hours will be local resident, minority artisans, and

v. a minimum of five percent (5%) of the construction workforce labor hours will be women, and

vi. a minimum of ten percent (10%) of the total work hours shall be allocated for minorities, or

vii. as may otherwise be required by any superseding Federal or State employment discrimination prohibition laws.

14.1.6 Good Faith Efforts. The Contractor and each Subcontractor shall engage in Good Faith Efforts to comply with the Hiring Goals. For the purposes of this paragraph, the term "Good Faith Efforts" shall have the same meaning as it does in the Good Jobs Ordinance.

The Contractor and each Subcontractor shall individually implement Good Faith efforts to satisfy the Hiring Goals.

14.1.7 Action Plan and Pre-Construction Meeting. Not later than fourteen (14) business days prior to the scheduled commencement date for construction, the Contractor shall submit a written plan-of-action to the City and to the Administrator of the Good Jobs Ordinance defining how the Contractor, and each Subcontractor, shall implement Good Faith Efforts to fulfill the Hiring Goals. Each plan-of-action shall include the anticipated number of job positions required for the Work. Not later than five (5) business day prior to the commencement date of construction, the Contractor must attend a mandatory "pre-construction" meeting with the City to review all plans-of-action and other relevant materials. No construction work shall proceed absent this pre-construction meeting.

14.1.8 Other Contractor Obligations. In addition to the foregoing, the Contractor shall ensure that all Subcontractor contracts and agreements expressly set forth and state as binding obligations therein, subject to appropriate party name change, the above Hiring Goals and Good Faith Efforts. The Contractor shall be accountable for, and liable to the City for, Contractor and each Subcontractor compliance with Hiring Goals and Good Faith efforts.

i. The Contractor shall meet with the Administrator no less than four (4) weeks prior to the commencement of construction on a Covered Project and provide the Administrator with the number of job positions to be created by the project by trade and the qualifications by job tile.

ii. The Contractor shall be required to produce Contractor and Subcontractor documentation that may be required under the provisions of the Good Jobs Ordinance or that the City or the Administrator reasonably believes will assist the City or the Administrator with their evaluation of Hiring Goals and Good Faith Efforts.

iii. The Contractor shall deliver weekly certified payroll records to the City within five (5) working days of the end of each payroll period. Moreover, the Contractor shall require each Subcontractor to create weekly certified payroll records.

iv. The Contractor's and each Subcontractor's payroll records shall include the person-hours, the residential address, race, gender, hiring date, and apprentice (job) classification of all personnel employed under this Agreement and all Contracts and Sub-Contracts thereunder. The Contractor and each Subcontractor shall mark their respective final payroll period records as being final and be signed by an authorized officer or employee.

14.2 Liquidated Damages Applicable To Section 14.1

14.2.1 If the City finds that the Contractor, or a Subcontractor, has failed to achieve Hiring Goals during any five (5) day work period (Monday through Friday), the City shall:

i. issue a written notice to the Contractor specifying the matters constituting such failure and the time period within which Good Faith Efforts documentation must be delivered to the City for its evaluation.

ii. if the Good Faith documentation is not provided or, if provided, it fails to demonstrate compliance with Good Faith Efforts, the Contractor shall, for each failure by the Contractor or a Subcontractor to achieve the Hiring Goals during a full five day work period, pay to the City one thousand dollars ($1,000.00) as liquidated damages.

14.2.2 If the City finds that the Contractor, or a Subcontractor, has failed to deliver weekly certified payroll records to the City within five (5) working days of the end of each payroll period the Contractor shall, as liquidated damages pay one thousand dollars ($1,000.00) to the City for each week of ongoing violation.

14.2.3 The City shall provide the Contractor with an invoice identifying all sums due the City, as liquidated damages, as a result of the Contractor or a Subcontractor's failure to comply with the Good Jobs Ordinance as set forth above.

14.2.4 No portion of any invoice submitted by a Contractor that is subject to liquidated damages shall be paid by the City until such time as all liquidated damages relating to that invoice have been paid to the City.

14.2.5 The foregoing liquidated damages provisions shall be expressly set forth, subject to appropriate party name adjustments, as material provisions in all Contracts that the Contractor has with Subcontractors and the Contractor is obligated hereunder to enforce compliance in such Contracts with Subcontractors.

14.2.6 Any payment of liquidated damages hereunder shall not preclude a later claim, nor any later finding of a breach, or any payment of additional damages related to such later claim.

15. Housing and Urban Development Section 3 Clause. In the event this Contract is funded, in whole or in part, through Housing and Urban Development assistance, 24 C.F.R. §135.38 may apply and the Contractor shall then be required to comply with the following (referred to as the "Section 3 clause"):

15.1. The work to be performed under this Contract is subject to the requirements of Section 3 of the Housing and Urban Development Act of 1968, as amended, 12 U.S.C. § 1701u (Section 3). The purpose of Section 3 is to ensure that employment and other economic opportunities generated by HUD assistance or HUD-assisted Projects covered by Section 3, shall, to the greatest extent feasible, be directed to low and very low-income persons, particularly persons who are recipients of HUD assistance for housing.

15.2. The parties to this Contract agree to comply with HUD's regulations in 24 C.F.R. part 135, which implement Section 3. As evidenced by their execution of this Contract, the parties to this Contract certify that they are under no contractual or other impediment that would prevent them from complying with the part 135 regulations.

15.3. The Contractor agrees to send to each labor organization or representative of workers with which the Contractor has a collective bargaining agreement or other understanding, if any, a notice advising the labor organization or workers' representative of the Contractor's commitments under this Section 3 clause, and will post copies of the notice in conspicuous places at the work site where both employees and applicants for training and employment positions can see the notice. The notice shall describe the Section 3 preference, shall set forth minimum number and job titles subject to hire, availability of apprenticeship and training positions, the qualifications for each; and the

name and location of the person(s) taking applications for each of the positions; and the anticipated date the work shall begin.

15.4. The Contractor agrees to include this Section 3 clause in every subcontract subject to compliance with regulations in 24 C.F.R. part 135, and agrees to take appropriate action, as provided in an applicable provision of the subcontract or in this Section 3 clause, upon a finding that the subcontractor is in violation of the regulations in 24 C.F.R. part 135. The Contractor will not subcontract with any subcontractor where the contractor has notice or knowledge that the subcontractor has been found in violation of the regulations in 24 C.F.R. part 135.

15.5. The Contractor will certify that any vacant employment positions, including training positions, that are filled **(i)** after the Contractor is selected but before the Contract is executed, and **(ii)** with persons other than those to whom the regulations of 24 C.F.R. part 135 require employment opportunities to be directed, were not filled to circumvent the Contractor's obligations under 24 C.F.R. part 135.

15.6. Noncompliance with HUD's regulations in 24 C.F.R. part 135 may result in sanctions, termination of this contract for default, and debarment or suspension from future HUD assisted contracts.

15.7. With respect to work performed in connection with Section 3 covered Indian housing assistance, section 7(b) of the Indian Self-Determination and Education Assistance Act (25 U.S.C. § 450e) also applies to the work to be performed under this Contract. Section 7(b) requires that to the greatest extent feasible **(i)** preference and opportunities for training and employment shall be given to Indians, and **(ii)** preference in the award of contracts and subcontracts shall be given to Indian organizations and Indian-owned Economic Enterprises. Parties to this Contract that are subject to the provisions of Section 3 and section 7(b) agree to comply with Section 3 to the maximum extent feasible, but not in derogation of compliance with section 7(b).

16. Termination.

16.1. Termination of Contract for Cause. If, through any cause, the Contractor shall fail to fulfill in a timely and proper manner its obligations under this Contract, or if the Contractor shall violate any of the covenants, agreements, or stipulations of this Contract, the City shall thereupon have the right to terminate this Contract by either **(i)** giving written notice to the Contractor of a date certain by which Contractor shall, to the written satisfaction of the City, cure after which and without further action by any party, such termination shall automatically become effective and binding, or **(ii)** giving written notice to the Contractor specifying the effective date of such termination at least five (5) business days before the effective date of such termination.

16.1.1 In the event of a termination, all finished or unfinished documents, data, studies, reports, plans, specifications, drawings, supplies, services, etc. prepared

by the Contractor under this Contract shall, at the option of the City, become the City's property, and the Contractor shall be entitled to receive just and equitable compensation for any satisfactory work completed for such.

16.1.2 Notwithstanding the above, the Contractor shall not be relieved of liability to the City for damages sustained by the City by virtue of any breach of this Contract by the Contractor, and the City may withhold any payments to the Contractor for the purpose of setoff until such time as the exact amount of damages due the City from the Contractor is determined.

16.2. Termination for Convenience of the City. The City may terminate this Contract at any time for the convenience of the City, by a notice in writing from the City to the Contractor. If this Contract is terminated by the City as provided herein, the Contractor will be paid an amount which bears the same ratio to the total compensation as the services actually performed bear to the total services of the Contractor covered by this Contract, less payments of compensation previously made.

16.3. Termination for Non-Appropriation or Lack of Funding. The Contractor acknowledges that the City is a municipal corporation and that this Contract is subject to the appropriation and disbursement of funds by the City sufficient for this Contract for each budget year in which this Contract is in effect. The Contractor therefore agrees that the City shall have the right to terminate this Contract in whole or in part without penalty to the City in the event that sufficient funds to provide for City payment(s) under this Contract is not appropriated, not authorized, or not made available, or such funding has been reduced. In the event this Contract is subject, in whole or in part, to the appropriation and disbursement of Federal and/or State funds and those Federal and/or State funds are not appropriated or are not disbursed to the City, the Contractor hereby agrees that the City shall have the right to terminate this Contract in whole or in part without penalty to the City.

16.3.1 Effects of Non-Appropriation. If funds to enable the City to effect continued payment under this Contract are not appropriated, authorized or otherwise made available by law, the City shall have the right to terminate this Contract without penalty at the end of the last period for which funds have been appropriated, authorized or otherwise made available by law by giving written notice of termination to the Contractor.

16.3.2 Effects of Reduced Levels of Funding. If funding is reduced by law, or funds to pay the Contractor for the agreed to level of the products, services and functions to be provided by the Contractor under this Contract are not appropriated, authorized or otherwise made available by law, the City may, upon seven (7) business days written notice to the Contractor, reduce the level of the products, services or functions in such manner and for such periods of time as the City may elect. The charges payable under this Contract shall be equitably

adjusted to reflect such reduced level of products, services or functions and the parties shall be afforded the rights set forth in this Contract.

16.3.3 No Payment for Lost Profits. In no event shall the City be obligated to pay or otherwise compensate the Contractor for any lost or expected future profits.

16.4. Rights Upon Termination.

16.4.1 Termination for Cause. In the event the City terminates this Contract for cause, the Contractor shall relinquish to the City any applicable interest, title and ownership including, but not limited to, perpetual use of any proprietary rights in and to the products and deliverables delivered to, in possession of and properly invoiced and paid for by (except to the extent such invoiced amount is disputed) the City. With regard to third party products, the Contractor shall transfer all licenses which it is permitted to transfer in accordance with the applicable third party license. The City shall have no financial obligation to compensate the Contractor for such terminated products unless payment is otherwise approved by the City prior to such termination. The Contractor shall be liable for costs incurred by the City, including but not limited to reasonable attorney fees and all court awarded fees and costs incurred in terminating this Contract in whole or in part.

16.4.2 Termination for Lack of Funding or Convenience. In the event of termination by the City for lack of funding or convenience, the City shall pay the Contractor for all labor, services, equipment, materials, reports, plans, specifications, drawings, deliverables, incidentals, etc.(including any holdbacks) installed and delivered to the City as of the Termination Date and the Contractor shall relinquish to the City any applicable interest, title and ownership including, but not limited to perpetual use of any proprietary rights in and to said labor, services, equipment, materials, reports, plans, specifications, drawings, deliverables, incidentals, etc. delivered to, in possession of and paid for by the City (except to the extent any invoiced amount is disputed). The Contractor shall be required to exercise commercially reasonable efforts to mitigate damages.

16.4.3 Assumption of Subcontracts. In the event of termination, the City shall have the right to assume, at its option, any and all subcontracts for products, services and functions provided exclusively under this Contract.

16.4.4 Delivery of Documents. In the event of termination, **(i)** the Contractor shall promptly deliver to the City, in a manner reasonably specified by the City, all documents and other tangible items furnished by, or owned, leased, or licensed by, the City, and **(ii)** the City shall pay the Contractor for all services performed and deliverables completed and accepted (pro-rated for deliverables partially completed) prior to the effective date of the termination (except to the extent any invoice amount is disputed).

16.5. Ownership of Instruments of Service. The City acknowledges the Contractor's documents, reports, plans, specifications, drawings, deliverables, etc. created and to be created pursuant to this agreement, including electronic files, are Instruments of Service. Nevertheless, the final Instruments of Service, including, but not limited to architects, engineering, construction, and similar documents, reports, plans, specifications, drawings, deliverables, etc. prepared under this agreement shall become the property of the City upon City payment for that Instrument of Service and the City reserves the right to use the Instruments of Service.

17. Force Majeure. Contractor shall not be held responsible for delays nor be subject to liquidated damages when such delays are caused by conditions beyond its control, including without limitation:

17.1. Acts of God, fire, explosion, epidemic, cyclone, flood, war, strikes, revolution, civil commotion, or acts of public enemies; and

17.2. Change of law, order, proclamation, regulation, ordinance, or governmental requirement.

Upon cessation of work for reason of force majeure delays, Contractor shall use its best efforts to meet the schedule set forth in Section 5 of this Contract.

18. Subcontracting. The Contractor shall not, without the prior written approval of the City's Using Agency, subcontract, in whole or in part, any of the Contractor's services. Any subcontractor so approved shall be required to secure and maintain insurance coverage equal to or better than that required of the Contractor and shall name the City as an additional insured party and said subcontractors shall deliver to the City a certificate of insurance evidencing such coverages. All subcontractors shall comply with all federal, state and local, laws, regulations and ordinances but such requirement shall not relieve the Contractor from its requirement that all services provided hereunder shall comply with all Federal, State and local, laws, regulations and ordinances.

18.1. The Contractor shall be as fully responsible to the City for the acts and omissions of its subcontractors, and of persons either directly or indirectly employed by them, as it is for the acts and omissions of persons directly employed by the Contractor.

18.2. The Contractor is responsible for and shall control activities of its subcontractors, and the subcontractors shall consult and cooperate with one another and other contractors working on the Project site. Each subcontractor shall furnish all necessary information to other subcontractors and shall lay out and install its own work so as to avoid any delays or interferences with the work of another. Any cost for changes, cutting and/or repairing, made necessary by failure to observe the above requirements shall be borne by the Contractor or subcontractor responsible for such failure or neglect.

18.3. The Contractor shall not, without the prior written approval of the City's Using Agency, substitute, terminate, replace or otherwise remove a subcontractor.

19. Assignability. The Contractor shall not assign any interest in this Contract, and shall not transfer any interest in the same (whether by assignment or novation) without the prior written approval of the City; provided, however, that claims for money due or to become due the Contractor from the City under this Contract may be assigned to a bank, trust, company, or other financial institution, or to a Trustee in Bankruptcy, without such approval. Notice of any such assignment or transfer shall be furnished promptly to the City.

20. Audit. The City reserves the right to audit the Contractor's books of account in relation to this Contract any time during the period of this Contract or at any time during the twelve month period immediately following the closing or termination of this Contract. In the event the City elects to make such an audit, the Contractor shall immediately make available to the City all records pertaining to this Contract, including, but not limited to, payroll records, bank statements and canceled checks.

21. Risk of Damage and Loss. The Contractor shall be solely responsible for causing the timely repair to and/or replacement of, City property or item(s) intended to become City property hereunder, where the need for repair or replacement was caused by the Contractor, by someone under the care and/or control of the Contractor, by any subcontractor of the Contractor, or by any shipper or delivery service. The Contractor shall be solely responsible for all costs and expenses, including but not limited to shipping, delivery, insurance, etc, associated with the foregoing repair and replacement obligation. Further, the Contractor shall be solely responsible for securing the City's written acceptance of all completed repairs and replacements required hereunder. The City hereby retains sole discretion to determine whether a repair or a replacement is the proper remedy.

22. Interest of Contractor. The Contractor covenants that it presently has no interest and shall not acquire any interest, direct or indirect, in the Project or any parcel of land therein or any other interest which would conflict in any manner or degree with the performance of its services hereunder. The Contractor further covenants that in the performance of this Contract no person having any such interest shall be employed.

23. Entire Contract. This Contract shall constitute the complete and exclusive statement of the contract between the parties as it relates to this transaction and supersedes all previous agreements and understandings, whether written or oral, relating to such subject matter. Any amendment to this Contract must be in writing and agreed to and executed by the City and the Contractor, and must comply with the City's Charter and Code of Ordinances.

24. Independent Contractor Relationship. The relationship between the City and the Contractor is that of client and independent contractor. No agent, employee, or servant of the Contractor shall be deemed to be an employee, agent or servant of the City. The Contractor shall be solely and entirely responsible for its acts and the acts of its agents, employees, servants and subcontractors during the performance of this agreement. It is the express intention of the

parties hereto, and the Contractor hereby agrees and covenants, that it and any and all third party(ies) and subcontractor(s) retained by the Contractor hereunder is/are not and shall not be deemed an employee of the City of Waterbury, but is/are and shall remain an independent contractor relative to the City and that nothing herein shall be interpreted or construed as creating or establishing the relationship of employer-employee between the City of Waterbury and the Contractor or between the City of Waterbury and any third party(ies) or subcontractor(s). Thus, the Contractor hereby covenants that it, its subcontractor(s) and third party(ies) shall not be entitled to the usual characteristics of employment, such as income tax withholding, F.I.C.A. deductions, pension or retirement privileges, Workers Compensation coverage, health benefits, etc. and that the Contractor shall be solely and entirely responsible for its acts and the acts of its agents, employees, servants, representatives, subcontractors and third party(ies).

25. Severability. Whenever possible, each provision of this Contract shall be interpreted in such a manner as to be effective and valid under applicable law. If any provision of this Contract, however, is held to be prohibited or invalid under applicable law, such provision shall be deemed restated to reflect the original intentions of the parties, as nearly as possible in accordance with applicable law, and if capable of substantial performance, the remaining provisions of this Contract shall be enforced as if this Contract was entered into without an invalid provision. If the ruling and/or controlling principle of law or equity leading to the ruling is subsequently overruled, modified or amended by legislation, judicial or administrative action, then the provision(s) in question as originally set forth in this Contract shall be deemed valid and enforceable to the maximum extent permitted by the new controlling principal of law or equity.

26. Survival. Any provisions of this Contract that impose continuing obligations on the parties shall survive the expiration or termination of this Contract for any reason.

27. Changes in the Project: Change Orders.

27.1. At the sole discretion of the City, a Change Order may be issued solely by the City to modify an existing party obligation set forth in this Contract where the scope of the Change Order is:

27.1.1 within the scope of the original Contract OR is made pursuant to a provision in the original Contract, AND

27.1.2 the Change Order monetary cost is charged solely against those funds encumbered for and at the time the Contract was originally executed by the City, that is those funds set forth in the original Contract as a not to exceed payment amount OR within the original Contract's contingency / allowance / reserve amount (if any is stated therein), AND

27.1.3 The Final Completion Date has not been changed.

27.2. Notwithstanding the foregoing, a Change Order shall not include

27.2.1 an upward adjustment to a Contractor's payment claim, or

27.2.2 a payment increase under any escalation clause set forth in the original Contract, or any Change Order, or any amendment.

27.3. That the work and/or services contemplated are necessary does not, in itself, permit a Change Order. Should the need for a Change Order arise, the request shall be reviewed and approved by the City's Using Agency and any City designated representative(s). To be binding and enforceable, a Change Order shall thereafter be signed by both the Contractor, any City designated representative(s), and a duly authorized representative of the City's Using Agency prior to the Contractor's delivery of the services, etc. contemplated in said Change Order. All Change Orders are governed by the provisions of this Contract. Any contract change NOT fully complying with this Section 27 shall be effectuated solely by an amendment to this Contract complying with Section 38.073 of the City's "Centralized Procurement System" ordinance.

28. Conflicts or Disputes. This Contract represents the concurrence between the City and the Contractor and governs all disputes between them. In the instance of a conflict or dispute over issues not specifically referenced within the Contract, the following documents shall be used as historical documents, without regard to the order of precedence, to resolve such conflicts or disputes, the historical documents are **(i)** the City's aforementioned **RFP No. 8890** and **(ii)** the Contractor's proposal responding to the aforementioned **RFP No. 8890.**

28.1. Procedure. This procedure supersedes all statements to the contrary occurring either in proposals or other prior agreements, oral or written, and all other communications between the parties relating to this subject.

28.2. Presumption. This Contract or any section thereof shall not be construed against any party due to the fact that the Contract or any section thereof was drafted by such party.

29. Disputes; Legal Proceedings; Waiver of Trial by Jury and Continued Performance. The Contractor agrees that its waives a trial by jury as to any and all claims, causes of action or disputes arising out of this Contract or services to be provided pursuant to this Contract. Notwithstanding any such claim, dispute or legal action, the Contractor shall continue to perform services under this Contract in a timely manner, unless otherwise directed by the City.

30. Binding Contract. The City and the Contractor each bind themselves, and their successors, assigns and legal representatives to the other party to this Contract and to the successors, assigns and legal representatives of such other party with respect to all covenants of this Contract.

31. Waiver. Any waiver of the terms and conditions of this Contract by either of the parties hereto shall not be construed to be a waiver of any other term or condition of this Contract.

32. Governing Laws. This Contract, its terms and conditions and any claims arising there from shall be governed by the laws of the State of Connecticut.

33. Notice. Except as otherwise specifically prohibited in this Contract, whenever under this Contract approvals, authorizations, determinations, notices, satisfactions or waivers are required or permitted, such items shall be effective and valid only when given in writing signed by a duly authorized officer of the City or the Contractor, and delivered in hand or sent by mail, postage prepaid, to the party to whom it is directed, which until changed by written notice, are as follows:

Contractor: HILLVIEW PROPERTY MAINTENANCE LLC
172 Burlington Rd
Harwinton, CT 06791-2008

City: City of Waterbury
c/o Public Works Department
185 South Main Street, 5th Floor
Waterbury, CT 06706

With copy to:
City of Waterbury
Office of the Corporation Counsel
City Hall Municipal Building - 3rd Floor
235 Grand Street
Waterbury, CT 06702

34. City Code of Ordinances, Ethics and Conflict of Interest Code, Provisions. The Person (the term "Person" shall herein be as defined in Section 38 of the City's Code of Ordinances) supplying the labor, services, equipment, materials, reports, plans, specifications, drawings, deliverables, incidentals, etc. under this Contract shall comply with all applicable Federal, State and Municipal statutes, regulations, charters, ordinances, rules, etc, whether or not they are expressly stated in this Contract, including but not limited to the following:

34.1. It shall be a material breach of this Contract, and, except as may be permitted by regulations or rulings of the City of Waterbury Board of Ethics it shall be a violation of the City's Code of Ordinances, for any Public Official, City Employee or Member of a Board or Commission who is participating directly or indirectly in the procurement process as set forth in the City's Code of Ordinances, including those participating in exempt transactions, to become or be the employee of any person contracting with the governmental body by whom the Official, Employee, or Board or Commission member is employed or is a member.

34.2. It shall be a material breach of this Contract, and it shall be a violation of the City's Code of Ordinances for any Person to offer, give, or agree to give any current or former

Public Official, Employee or Member of a Board or Commission, or for such current or former Public Official, Employee or Member of a Board or Commission to solicit, demand, accept or agree to accept from another Person, a gratuity or an offer of employment in connection with any: decision; approval; disapproval; recommendation; preparation of any part of a program requirement or a requisition; influencing the content of any specification or procurement standard; or rendering of advice, investigation, auditing, or in any other advisory capacity in any proceeding or application, request for ruling, determination, claim or controversy, or other particular matter, pertaining to any program requirement or a Contract or Purchase Order, or to any solicitation or proposal therefore.

34.3. It shall be a material breach of this Contract and it shall be a violation of the City's Code of Ordinances for any payment, Gratuity, or offer of employment to be made as an inducement for the award of a subcontract or order, by or on behalf of a subcontractor, the prime Contractor or higher tier subcontractor or any Person associated therewith, under a Contract or Purchase Order to the City.

34.4. The value of anything transferred or received in violation of the City's Charter, Code of Ordinances, and/or regulations promulgated there under, by any Person subject to said Charter and/or Ordinances may be recovered by the City.

34.5. Upon a showing that a subcontractor made a kickback to the City, a prime Contractor or a higher tier subcontractor in connection with the award of a subcontract or order there under, it shall be conclusively presumed that the amount thereof was included in the price of the subcontract or order and ultimately borne by the City and will be recoverable hereunder from the recipient. In addition, said value may also be recovered from the subcontractor making such kickbacks. Recovery from one offending party shall not preclude recovery from other offending parties.

34.6. It shall be a material breach of this Contract and it shall be a violation of the City's Code of Ordinances for a Person to be retained, or to retain a Person, to solicit or secure a contract with the City upon an agreement or understanding for a commission, percentage, brokerage, or contingent fee; and every Person, before being awarded a City Contract, shall deliver to the City, on a City authored form, a representation that such Person has not retained anyone in violation of this subsection 34.6, the failure to deliver said form being a material breach of this Contract and a violation of the City's Code of Ordinances. Note, however, this subsection 34.6 shall not apply to full-time Employees who, as a condition of their employment, may be entitled to bonuses or other fees in accordance with their employment relationship.

34.7. The Person hereby expressly represents that he/she/it has complied with those sections of the City's Code of Ordinances requiring that said Person has **(i)** delivered to the City an affidavit, on a City authored form, stating that the Person and its affiliates have no delinquent taxes or other financial obligations owned to the City; **(ii)** filed the City authored financial disclosure statement form as set forth in the City's Code of

Ordinances regarding disclosure of financial interests; **(iii)** delivered to the City a written acknowledgement, on a City authored form, evidencing receipt of a copy of the "Ethics and Conflict of Interest" ordinance for the City of Waterbury and hereby expressly represents that said Person is in full compliance with the entirety of said Code of Ordinances; and **(iv)** filed a current list of all taxable personal and real property as required by the State of Connecticut General Statutes. Any violation of this subsection 34.7 shall be deemed a material breach of this Contract and shall be a violation of the City's Code of Ordinances.

34.8. The definitions set forth in the City's Code of Ordinances shall be the primary source for interpretation of the forgoing subsections 34.1-34.7.

34.9. The Contractor is hereby charged with the requirement that it shall have knowledge of, and shall fully comply with, all relevant provisions of the City's Charter and all relevant provisions of the City's Code of Ordinances, including without limitation Chapters 93, titled "Discriminatory Practices", Chapter 38 titled "Centralized Procurement System", and Chapter 39 titled "Ethics and Conflict of Interest", of said Code as may be amended from time to time.

34.10. The Contractor hereby acknowledges receipt of a copy of the Chapters 38 and 39 of City's Ordinance regarding Procurement, Ethics, and Conflicts of Interest and has familiarized itself with said Code and hereby agrees to adhere to said Code. The text of Chapters 38 and 39 of said Code may be obtained from the Office of the City Clerk of the City and on the internet at the City Clerk's web site: *http://www.waterburyct.org/content/458/539/default.aspx* [click link titled "The City of Waterbury Code of Ordinances *Passed 8/24/2009*". For Chapter 38, click on "TITLE III: ADMINISTRATION", then click on "CHAPTER 38: CENTRALIZED PROCUREMENT SYSTEM". For Chapter 39, click on "TITLE III: ADMINISTRATION", then click on "CHAPTER 39: ETHICS AND CONFLICTS OF INTEREST"].

34.11. The Contractor is hereby charged with the requirement that it shall have knowledge of, and shall fully comply with, the City's Ordinance Sections 34.15 through 34.99 entitled, "Ordinance Concerning the Hiring of Waterbury Residents on Certain Publicly-Funded Construction Projects," and the State of Connecticut Legislature's Special Act No. 01-1.

34.12. Every Person who conducts business with, contracts, with or provides commodities or services to the City, is charged with notice of the extent of the powers and authority, and the limitations thereon, of the Public Officials and Employees of the City, as set forth in the charter of the City, the Code of Ordinances and any Regulations or Policies pertaining thereto. In particular, and without implying any limitation as to its applicability, it applies to all Persons who participate in the procedures pertaining to the Centralized Procurement System as set forth in Chapter 38, and the Ethics and Conflict of Interest provisions set forth in Chapter 39 of the Code of Ordinances.

34.13. INTEREST OF CITY OFFICIALS. No member of the governing body of the City, and no other officer, employee, or agent of the City who exercises any functions or responsibilities in connection with the carrying out of the project, to which this agreement pertains, shall have any personal interest, direct or indirect, in this agreement.

34.14. PROHIBITION AGAINST CONTINGENCY FEES. The Contractor hereby represents that it has not retained anyone to solicit or secure a contract with the City upon an agreement or understanding for a commission, percentage, brokerage or contingency fee.

34.15. FREEDOM OF INFORMATION ACT NOTICE. Pursuant to State statute, in the event the total compensation payable to the Contractor set forth in Section 6 herein is greater than $2,500,000.00, the City is entitled to receive a copy of any and all Contractor records and files related to the performance of this Contract and those records and files are subject to the Freedom of Information Act ("the Act") and may be disclosed by the City pursuant to the Act.

[Signature page follows]

IN WITNESS WHEREOF, the parties hereto execute this Contract on the dates signed below.

WITNESSES:

Sign:_____
Print name:

Sign:_____
Print name:

CITY OF WATERBURY

By:_____
Paul K. Pernerewski, Jr.
Mayor

Date: _____

WITNESSES:

Sign:_____
Print name:

Sign:_____
Print name:

HILLVIEW PROPERTY MAINTENANCE LLC

By:_____
Print name:
Its _____

Date: _____

ATTACHMENT A

Attachment A shall consist of the following, which are attached hereto, are acknowledged by the Contractor as having been received, or otherwise hereby incorporated by reference as noted below, and all are made a part hereof:

1.1.1 **RFP Number 8890** (acknowledged by the Contractor as having been received and incorporated by reference);

1.1.2 **Addendum #1 to RFP Number 8890**, dated August 25, 2026 and consisting of 8 pages (attached hereto);

1.1.3 Contractor's Proposal, consisting of 21 pages, submitted in response to **RFP Number 8890**, and Contractor's Price Proposal, dated August 31, 2026 and consisting of 3 pages (all attached hereto);

1.1.4 Certificates of Insurance (attached hereto);

1.1.5 Performance Bond and Payment Bond (incorporated by reference);

1.1.6 Special Conditions (Article 1 – Article 22) consisting of 6 pages (attached hereto);

1.1.7 General Conditions (Article 1 – Article 113) consisting of 35 pages (attached hereto);

1.1.8 Technical Specifications, RFP Attachment F, consisting of 5 pages (attached hereto);

1.1.9 Annual Statement of Financial Interests; Disclosure and Affidavit Re: Outstanding Obligations to the City; Debarment Certification; Corporate Resolution, Non-Collusion Affidavit (incorporated by reference);

1.1.10 Any and all amendment(s) and Change Orders issued by the City after execution of Contract (incorporated by reference);

1.1.11 All applicable Federal, State and local statutes, regulations, charter and ordinances (incorporated by reference); and

1.1.12 All permits (including, but not limited to, City of Waterbury Building permit(s)) and licenses (incorporated by reference).

Attachment B-1

"Non-Discrimination Contract Language", dated REV.07012026, attached hereto and incorporated herein.

MAUREEN McCAULEY
ASSISTANT DIRECTOR OF PURCHASING

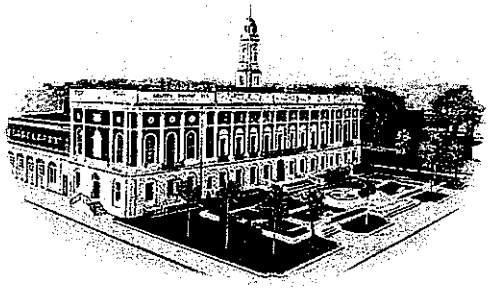

OFFICE OF THE DIRECTOR OF PURCHASING
THE CITY OF WATERBURY
CONNECTICUT

ADDENDUM #1

August 25, 2026

RFP 8890 On-Call Tree Services

Please Be Advised:
1. All Proposers are hereby notified that this Addendum No. 1 shall be part of the Contract Documents for the above referenced **RFP #8890**.
2. This Addendum amends or supplements the RFP Documents. All provisions which are not so amended or supplemented remain in full force and effect.
3. Each Proposer shall be responsible for determining that it has received all Addenda issued and shall acknowledge receipt of all Addenda on the Addendum Acknowledgment Form (see Attachment C). Failure to do so may subject the Proposer to disqualification.

The Contract Documents are hereby amended as follows:

Please refer to the questions and answers below.

Question: Per RFP, "The City of Waterbury is seeking proposals to provide the City various types of tree service including routine tree pruning including ornamental trees, scheduled removal of trees and/or limbs and emergency tree work. Tree work would be within the City of Waterbury property and Rights of Ways and may include Parks, Golf Courses and Public Buildings. Please see Attachment E, Technical Specifications." However, Attachment E is the actual Request for Proposal form. Please advise if there should be an additional document. / Technical Specifications / Attachment E The RFP references Attachment E as containing the Technical Specifications; however, Attachment E in the solicitation package appears to contain the Price Proposal forms. Is there a separate Technical Specifications document that should have been included with the RFP?
Answer: Technical Specifications attached.

Question: If there was a previously awarded contract for this, could you please provide the bid tabulation along with expended amount utilized during that contracted period.
Answer: Not available.

235 GRAND STREET • WATERBURY, CONNECTICUT 06702 • PHONE: (203) 574-6749 • FAX: (203) 597-3437

Question: Prevailing Wage / Pricing Adjustment The RFP establishes fixed regular and emergency hourly rates, while the Contract provides that prevailing wage requirements may apply depending upon the funding and nature of individual work assignments. When a Task Order is subject to a prevailing wage or other mandated wage determination not provided with the RFP, will the Contractor be permitted to adjust its contract rates to account for the applicable wage and fringe requirements?
Answer: No work to be performed under this contract will be for amounts that would require prevailing wages.

Question: Should bidders assume prevailing wage and certified-payroll requirements apply to all work when establishing Attachment E rates? If only certain Task Orders will be subject to prevailing wage, LoCIP, TAR, CHRO or Good Jobs requirements, will the contractor be permitted to adjust rates for those Task Orders to account for the applicable wage and compliance requirements?
Answer: No work to be performed under this contract will be for amounts that would require prevailing wage rates, LoCIP, TAR, CHRO, or Good Jobs Ordinance requirements.

Question: Emergency Response Time The RFP contemplates emergency tree work and 24/7 availability. Is there a required maximum response or mobilization time following notification by the City?
Answer: 2 Hours.

Question: Please define an Emergency Call, required response time, whether a crew must be continuously available/on standby, minimum billable call-out hours, and whether nights, weekends and holidays automatically qualify for Emergency Rates.
Answer: 2 Hour response time. Will not ask companies to be on Standby. Nights, weekends and Holidays qualify for emergency rates.

Question: Work near electrical conductors How will work near electrical conductors be handled? I see no mention of EHAP or MAD in this document.
Answer: It is the vendors responsibility to comply with all safety requirements, including, but not limited to, contracting utilities as needed.

Question: Is there a budget number for these operations that you can share?
Answer: No.

Question:. Please provide the City's historical annual expenditures, crew hours, emergency hours and approximate number of tree removals/pruning assignments for the prior 2-3 years.
Answer:1 year of having On Call Tree Services. Approximately 15 hours of emergency work and approximately 50+ hours of non-emergency work.

Question: How will work be allocated among multiple awardees: rotation, availability, lowest rate, quotation by task, or City discretion?
Answer: City's discretion.

Question: Please define responsibility for traffic control and police details. If police details are required by the City, will those costs be paid directly by the City or reimbursed separately rather than included in the contractor's hourly rates?
Answer: Cost to be paid directly by City.

Question: Please clarify how the City will establish the deadline against which delay damages would be measured, and confirm that any such deadline will be defined and agreed upon within each individual Task Order before work begins.
Answer: Deadline with each task order shall be made and agreed upon by both the City and the vendor prior to work starting.

Question: Please clarify when Performance and Payment Bonds will be required and whether bond premiums may be separately added to a Task Order rather than included in the base hourly rates?
Answer: Jobs over $50,000 require a Performance and Payment Bond. We anticipate no job will reach that threshold.

Thank you.

Maureen McCauley
Assistant Director of Purchasing – City of Waterbury

Attachment F Document

- TECHNICAL SPECIFICATIONS

REQUEST FOR PROPOSAL #8890
BY
THE CITY OFWATERBURY
Public Works Department
On-Call Tree Services

TECHNICAL SPECIFICATIONS

GENERAL REQUIREMENTS:

1. The selected vendor(s) must be a tree expert licensed as an "arborist" by the State of Connecticut (CT General Statutes Sec. 23-61a). The license number must be current and shall be included with the response documents.
2. All work shall be initiated by the Department of Public Works Director or his designee, Tree Warden, or Golf Course Superintendent with the request for a Task Order proposal.
3. A purchase order must be issued in advance to perform any and all work. All work will be inspected by City designated staff and upon their approval the vendor shall issue an invoice.
4. All work to be performed relating to this RFP is on City roads and properties. It will be the vendor's responsibility to maintain traffic control on all roads at all times. Should it become necessary to close off a road or sidewalk completely the vendor must obtain approval through the City of Waterbury Engineering Department. Fees for the application to close a road and/or sidewalk shall be waived.
5. Traffic Control must be provided by the vendor. The Vendor must provide traffic control signage and appropriately garbed flagmen in accordance with the most up to date Manual on Uniform Traffic Control. If police traffic control is required costs will be borne by the Vendor.
6. All pricing relating to this RFP must remain in effect and firm fixed provided in the RFP and through the term of any executed contract.
7. The selected vendor(s) must be on call 24 hours a day, 7 days a week, year round for emergency operations.
8. Response time shall be no greater than two (2) hours after contacted by City of Waterbury Staff.
9. In the event of severe weather, the vendor must make a crew available for emergency tree work. A crew will be defined as: one bucket truck, one chip truck, one chipper, one crew chief, one climber, and at least one ground person. Vendor shall be contacted by City of Waterbury Staff based on local weather forecasts. Severe weather shall include, but not be limited to hurricanes, snow and ice storms, thunderstorms or tornadoes. Any emergency work shall be billed on the hourly rate noted on the bid proposal form for emergency work.
10. The City reserves the right to inspect all equipment of the vendor(s) it is considering to award prior to making awarding the required services.

TREE PRUNING SPECIFICATIONS:

- All work will be billed at an hourly rate for this service.

- Trees must be trimmed to create a well-maintained ornamental appearance whenever possible and must adhere to all American National Standards Institute (ANSI) A300 Standards and practices.
- Maximum tree trimming-crown reduction, pruning top and sides to lighten and balance, removing deadwood and crossed branches. This pruning is to provide for public safety and the general health of the trees. However, at no time should reduction exceed ¼ of the overall size of any tree unless specified by the Director of Public Works, Tree Warden, or Superintendent of Golf Courses. The finished trees shall have a symmetrical and aesthetic form with the weight evenly distributed
- In order to shorten the length of limbs, use the thin to lateral methods. Methods of pruning which may be called Topping, Heading Back, or Lions Tailing shall not be used.
- To lighten end weight where such overburden appears likely to cause breakage of limbs four inches (4") or more in diameter, the only pruning method to be used is drop crotch. Remove cross limbs and epicormics growth (suckers) as required. Pruners will be used to complete final trimming processes. Any exceptions will be at the discretion of the Director of Public Works, Tree Warden or Superintendent of Golf Courses. All trimming will be done in a manner which will not injure or scar the tree.
- Final pruning cuts shall be made without leaving a stub. They shall be made in a manner to favor the earliest covering of the wound by callus growth. This requires that the wound be as small as possible and the cut be reasonably flush outside the branch bark ridge area and that the cambium tissues at the edge of the cut be alive and health. Trees are to be pruned at various locations around Waterbury. This work consists of safety pruning all dead wood and low branches on trees, removing major dead wood, diseased wood, stubs, and any weak leaders that may be considered dangerous.
- The vendor must be able to evaluate tree conditions and hazards and will be responsible to inform the City of any invasive insect species and pests i.e. Asian Long Horned Beetle, Winter Moth or Emerald Ash Borer encountered during any pruning or takedown operation.
- When dead wood trimming, all dead branches one (1") inch in diameter or greater at the trunk must be removed. All trees with branches over a roadway shall be pruned to provide fifteen (15') feet of clearance at the curb. The contractor must have a bucket truck with a minimum working height of 60' (sixty feet) from the bottom of the basket to the ground. The contractor will utilize equipment in good operating condition with adequate suitable equipment to perform the necessary operations. Equipment required may include a limb/brush chipper, a whole tree chipper capable of chipping logs up to 14 inches in diameter, and chip trucks. All equipment must be in good working order when reporting for work, with sharpened blades on all saws. While on an hourly rate no sharpening will be performed during the hours of operation. Vendor must provide sufficient extra sharpened blades. At times when the equipment is non-operable no payment will be made by the City of Waterbury
- It is required that hourly crew work time be verified by the Director of Public Works, Town Tree Warden and/or the Golf Course Superintendent. The

Contractor must insure that these persons are notified that the work is occurring.

- The City shall not pay for un-verified or un-approved crew times.

TREE REMOVAL SPECIFICATIONS

- This work will be billed at an hourly rate. Due to the various considerations that must be taken into account with a tree removal / take down, including variations in overall canopy volume, potential secondary involvement with other trees or methods of removal due to proximity of structures etc.; tree removal (take down) will billed at an hourly rate and will be on a case by case basis.
- The Contractor shall furnish all materials, equipment, tools, supplies, labor and transportation including fuel and power to perform all of the work necessary for the removal of trees designated during the life of the contract. Stumps must be flush cut to the ground. All grass and pavement areas are to be blown clean of all debris with a leaf blower.
- As much as is feasible, tree removal work will be scheduled for an eight (8) hour day between the hours of 7:30 a.m. and 4:00 p.m. The tree removal crew (minimum 3 men) will include a qualified tree man ("crew chief") and at least one member with the ability (and the proper equipment) to climb the trees in order to accomplish the work. The contractor must have a bucket truck with a minimum working height of 60' (sixty feet) from the bottom of the basket to the ground. The contractor will utilize equipment in good operating condition with adequate suitable equipment to perform the necessary operations. Equipment required may include a limb/brush chipper, a whole tree chipper capable of chipping logs up to 14 inches in diameter, and chip trucks. All equipment must be in good working order when reporting for work, with sharpened blades on all saws. While on an hourly rate no sharpening will be performed during the hours of operation. Vendor must provide sufficient extra sharpened blades. At times when the equipment is non-operable no payment will be made by the City.

EMERGENCY CLEARING SERVICES

- This work will be billed at an hourly rate.
- The Contractor will be responsible for the clearing of any tree or tree debris that present road obstructions

as well as all identified aerial hazards over City roadways during and immediately following an inclement or adverse weather events as part of "Make Safe" operations.

- All materials will be cut and put off the curb line in order to re-gain safe passage on public roadways as soon as possible.
- The emergency services crew will include a qualified tree man ("crew chief").
- The City may require the Contractor to provide additional crews when deemed necessary to preserve public safety.

Attachment A Documents

- ANNUAL STATEMENT OF FINANCIAL INTEREST
- DEBARMENT CERTIFICATION
- CITY OF WATERBURY DISCLOSURE OF OUTSTANDING OBLIGATIONS

FILL IN AND RETURN WITH YOUR SUBMISSION

CITY OF WATERBURY
ANNUAL STATEMENT OF FINANCIAL INTERESTS (Calendar Year 202(0))
Persons or Entities Conducting Business with the City

I. Outstanding Purchase Orders of Contracts with the City

A. Contracts

No Contracts with the City ☐

On Call Tree Services
(Service or Commodity Covered by Contract)

1 year 2025-2026
(Term of Contract)

(Service or Commodity Covered by Contract)

(Term of Contract)

(Service or Commodity Covered by Contract)

(Term of Contract)

FILL IN AND RETURN WITH YOUR SUBMISSION

CITY OF WATERBURY
ANNUAL STATEMENT OF FINANCIAL INTERESTS (Calendar Year 202__)
Persons or Entities Conducting Business with the City

B. Purchase Order(s).

No Purchase Order(s) with the City ☐

Daily Tree work RFP #8388
(Service or Commodity Covered by Purchase Order)

7/22/20
(Date of Purchase Order)

(Service or Commodity Covered by Purchase Order)

(Date of Purchase Order)

(Service or Commodity Covered by Purchase Order)

(Date of Purchase Order)

FILL IN AND RETURN WITH YOUR SUBMISSION

CITY OF WATERBURY
ANNUAL STATEMENT OF FINANCIAL INTERESTS (Calendar Year 2020)
Persons or Entities Conducting Business with the City

II. Financial Interest Disclosure

(Public Officials, Employees or Board and Commission Members with interest in Person or Entity Conducting Business with the City)

No Officials, Employees or Board and Commission Members with Financial Interest ☑

(Name of Official)

(Position with City)

(Nature of Business Interest)
(e.g. Owner, Director etc...)

Interest Held By:
Self ☐ Spouse ☐ Joint ☐ Child ☐

(Name of Official)

(Position with City)

(Nature of Business Interest)
(e.g. Owner, Director etc...)

Interest Held By:
Self ☐ Spouse ☐ Joint ☐ Child ☐

1. I certify that this Annual Statement of Financial Interests is a complete and accurate statement of those matter required to be disclosed by me pursuant to §39.061 of the Code of Ordinances.

2. I understand that if I fail to file an Annual Statement (or amendment thereto) or an inaccurate Statement I will be in violation with Chapter 39 of the Code of Ordinance and, thereby, subject to the remedies set forth in §§38.71 and 39.101 of said Code.

3. I understand that I must file with the City Clerk, within fifteen (15) days following any reportable occurrence, any amendments to the Annual Statement.

I have read and agree to the above certification.

Hillview Property Maintenance, LLC
(Name of Company, if applicable)

Signature of Individual (or Authorized Signatory)

8-31-26
Date

David Benlman, Owner
Print or Type Name and Title (if applicable)

DELIVERED | By Mail ☐ Hand-Delivered ☑

FILL IN AND RETURN WITH YOUR SUBMISSION

City of Waterbury Certification
Regarding
Debarment, Suspension, Ineligibility and Exclusion

If the transaction is Federally funded, in whole or in part (including pass through grants to state and/or municipal government), this certification is required by the regulations implementing one or more Presidential Executive Orders. If this transaction is funded by the State of Connecticut, in whole or in part, this certification is required in accordance with one or more State of Connecticut general statutes.

1. By signing and submitting the attached proposal and/or this document, the prospective lower tier participant, vendor, or contractor is providing the certification set out below.
2. The certification in this clause is a material representation of fact upon which reliance was placed when this transaction was entered into. If it is later determined that the prospective lower tier participant, vendor, or contractor knowingly rendered an erroneous certification, in addition to other remedies available to the Federal , State, or City government, the department or agency with which this transaction originated may pursue available remedies, including suspension and/or debarment.
3. The prospective lower tier participant, vendor or contractor shall provide immediate written notice to the person to which the attached proposal and/or this document is submitted if at any time the prospective lower tier participant, vendor or contractor learns that its certification was erroneous when submitted or has become erroneous by reason of changed circumstances.
4. The terms "covered transaction", "debarred", "suspended", "ineligible", "lower tier covered transaction", "participant", "person", "primary covered transaction", "principal", "proposal", and "voluntarily excluded", as used herein, have the meanings set out in the Definitions and Coverage sections of rules implementing Executive Order 12549 and/or State of Connecticut statutes and regulations. You may contact the person to which this proposal and/or this document is submitted for assistance in obtaining a copy of the foregoing.
5. The prospective lower tier participant, vendor or contractor agrees by submitting the attached proposal and/or this document that, should the proposed covered transaction be entered into, it shall not knowingly enter into any covered transaction with a person who is debarred, suspended, declared ineligible, or voluntarily excluded from participation in this covered transaction unless authorized by the department or agency with which this transaction originated.
6. The prospective lower tier participant, vendor or contractor further agrees by submitting the attached proposal and/or this document that it will include the clause titled "Certification Regarding Debarment, Suspension, Ineligibility, and Voluntary Exclusion-Lower Tier Covered Transactions", without modification, in all covered transaction and in all solicitations for covered transactions.
7. A participant in a covered transaction may rely upon the certification of a prospective participant in a covered transaction that it is not debarred, suspended, ineligible, or voluntarily excluded from the covered transaction, unless it knows that the certification is erroneous. A participant may decide the method and frequency by which it determines the eligibility of its principals. Each participant may but is not required to, check the Non-procurement List.
8. Nothing contained in the foregoing shall be construed to require establishment of a system of records in order to render in good faith the certification required herein. The knowledge and information of a participant is not required to exceed that which is normally possessed by a prudent person in the ordinary course of business dealings.
9. Except for transactions authorized under paragraph 5 herein, if a participant in a covered transaction knowingly enters into a lower tier covered transaction with a person who is suspended, debarred, ineligible, or voluntarily excluded from participation in this transaction, in addition to other remedies available to the Federal, State or Municipal government, the department or agency with which this transaction originated may pursue available remedies, including suspension and/or debarment.

Certification

(1) The prospective recipient of monies hereby certifies, by submission of its attached proposal and/or by execution of this document, that neither it nor its principles are presently debarred, suspended, proposed for debarment, declared ineligible, disqualified, or voluntarily excluded from bidding or participation in the proposed transaction by any Federal, State, or Municipal department or agency or by the statutes, regulations or ordinances of the foregoing departments and agencies.

(2) Where the prospective recipient of monies is unable to certify to any of the statements in this certification, such prospective participant shall attach a written explanation hereto.

Full Legal Name and address of Recipient, Vendor, or Contractor: David Behlman
172 Plantation Rd
Plantation, CT 06791

Print Name and Title of Authorized Representative: David Behlman, Owner

Signature of Authorized Representative:

Date: 8-31-26

FILL IN AND RETURN WITH YOUR SUBMISSION

CITY OF WATERBURY
DISCLOSURE AND CERTIFICATION AFFIDAVIT REGARDING OUTSTANDING OBLIGATIONS TO THE CITY OF WATERBURY

For the purposes of this Disclosure of Outstanding Financial Obligations, the following definitions apply:

(a) "Contract" means any Public Contract as defined below.

(b) "Person" means one (1) or more individuals, partnerships, corporations, associations, or joint ventures.

(c) "Public Contract" means any agreement or formal commitment entered into by the city to expend funds in return for work, labor, services, supplies, equipment, materials or any combination of the foregoing, or any lease, lease by way of concession, concession agreement, permit, or per agreement whereby the city leases, grants or demises property belonging to the city, or otherwise grants a right of privilege to occupy or to use said property of the city.

(d) "City" means any official agency, board, authority, department office, or other subdivision of the City of Waterbury.

State of Connecticut

SS.:_____

County of New Haven

_____, being first duly sworn, deposes and says that:

1. I am the ***owner, partner, officer, representative, agent or*** _____ of Hillview Property maintenance (Contractor's Name), the Contractor that has submitted the attached agreement.

2. I am fully informed respecting the preparation and contents of the attached Agreement and of all pertinent circumstances respecting such Agreement;

3. That as a person desiring to contract with the City (check all that apply):

____ The Contractor and each owner, partner, officer, representative, agent or affiliate of the Contractor has filed a list of taxable personal property with the City of Waterbury for the most recent grand list, as required by Conn. Gen. Stat. §12-42.

__✓__ Neither the Contractor nor any owner, partner, officer, representative, agent or affiliate of the Contractor are required to file a list of taxable personal property with the City of Waterbury for the most recent grand list, as required by Conn. Gen. Stat. §12-42.

__✓__ Neither the Contractor nor any owner, partner, officer, representative, agent or affiliate of the Contractor either directly or through a lease agreement, owes back taxes to the City of Waterbury

FILL IN AND RETURN WITH YOUR SUBMISSION

CITY OF WATERBURY
DISCLOSURE AND CERTIFICATION AFFIDAVIT REGARDING OUTSTANDING OBLIGATIONS TO THE CITY OF WATERBURY

__✓__ Neither the Contractor nor any owner, partner, officer, representative, agent or affiliate of the Contractor either directly or through a lease agreement, has any other outstanding obligations to the City of Waterbury

4. The following list is a list of the names of all persons affiliated with the business of the Contractor, if none state none. Use additional sheet if necessary (Must be on company letterhead and notarized):

Name	Title	Affiliated Company (if none state NONE)	Service or Material	DOB
1		None		
2				
3				
4				

5. That as a person desiring to contract with the City:

(a) The Contractor or an owner, partner, officer, representative, agent or affiliate of the Contractor provides, or has provided, services or materials to the City within one (1) year prior to the date of this disclosure, if none, state none. Use additional sheet if necessary (Must be on company letterhead and notarized):

Name	Title	Affiliated Company (if none state NONE)	Service or Material	DOB
1		None		
2				
3				
4				

(b) The Contractor possesses an ownership interest in the following business organizations, if none, state none. Use additional sheet if necessary (Must be on company letterhead and notarized) :

Organization Name	Address	Type of Ownership
1		None
2		
3		
4		

(c) The following persons possess an ownership interest in the Contractor. If the Contractor is a corporation, list all of the officers of the corporation and the names of each stockholder whose shares exceed twenty-five

FILL IN AND RETURN WITH YOUR SUBMISSION

CITY OF WATERBURY
DISCLOSURE AND CERTIFICATION AFFIDAVIT REGARDING OUTSTANDING OBLIGATIONS TO THE CITY OF WATERBURY

(25) percent of the outstanding stock, if none, state none. Use additional sheet if necessary (Must be on company letterhead and notarized):

Name	Title	DOB	Stock %
1		none	
2			
3			
4			

(d) Of the following of the affiliates, individuals or business entities identified in this affidavit, list each that owns, owned, or within one (1) year prior to the date of this disclosure has owned, taxable property situated in the City of Waterbury, if none state none. Use additional sheet if necessary (Must be on company letterhead and notarized):

Name	Title	Affiliated Company (if none state NONE)	Address	DOB
1		none		
2				
3				
4				

(e) If the Contractor conducts business under a trade name, the following additional information is required: the place where such entity is incorporated or is registered to conduct such business; and the address of its principal place of business, if none, state none:

TRADE NAME	PLACE OF INCORPORATION/REGISTRY	PRINCIPAL PLACE OF BUSINESS
1	none	
2		
3		
4		

I hereby certify that the statements set forth above are true and complete, and I understand that any incorrect information or omission of information from this affidavit may result in the immediate termination of the Contractor's agreement with the City of Waterbury.

For Partnership/Sole Proprietor

In presence of:

Witness

Name of Partnership/Business

FILL IN AND RETURN WITH YOUR SUBMISSION

CITY OF WATERBURY
DISCLOSURE AND CERTIFICATION AFFIDAVIT REGARDING OUTSTANDING OBLIGATIONS TO THE CITY OF WATERBURY

By: David Behlman
Name of General Partner/ Sole Proprietor

172 Burrington Rd. Harwinton CT
Address of Business

State of Connecticut)

) ss Waterbury

County of Litchfield)

David Behlman being duly sworn,

Deposes and says that he/she is owner of Hillview Property and that he/she answers to the foregoing questions and all statements therein are true and correct.

Subscribed and sworn to before me this 31st day of August 2026

(Notary Public)

My Commission Expires: 10/31/2030

For Corporation

Witness

Name of Corporate Signatory

Address of Business

Affix
Corporate
Seal

By:
Name of Authorized Corporate Officer

Its:
Title

FILL IN AND RETURN WITH YOUR SUBMISSION

CITY OF WATERBURY
DISCLOSURE AND CERTIFICATION AFFIDAVIT REGARDING OUTSTANDING OBLIGATIONS TO THE CITY OF WATERBURY

State of Connecticut)
) SS Waterbury
County of New Haven)

David Behlman being duly sworn,

deposes and says that he/she is owner of Hillview Property and that he/she answers to the foregoing questions and all statements therein are true and correct.

Subscribed and sworn to before me this 31st day of August 2026.

(Notary Public)

My Commission Expires: 10-31-2030

LIMITED LIABILTY COMPANY RESOLUTION

I, David Benimon, hereby certify that I am the duly authorized and acting Member / (Manager) (circle one) of Hillview Property Maintenance limited liability company organized and existing under the laws of the State of Connecticut, do hereby certify that the following facts are true and were taken from the records of said LLC.

The following resolution was adopted at a meeting of the LLC duly held on the first day of January, 2012.

"It is hereby resolved that David Benimon is authorized to make, execute and approve, on behalf of this LLC, any and all contracts or amendments thereof".

And I do further certify that the above resolution has not been in any way altered, amended, repealed and is now in full force and effect.

IN WITNESS WHEREOF, I hereunto set my hand and affix the company seal of said Hillview Property Maintenance LLC this 31st day of August, 2020.

Manager/Member

FILL IN AND RETURN WITH YOUR SUBMISSION

ATTACHMENT C

KEVIN MC CAFFERY
DIRECTOR OF PURCHASING
235 GRAND STREET, ROOM 103
WATERBURY, CT 06702

The undersigned declares that the only persons or parties interested in this Proposal as principals are as stated; that the Proposal is made without any collusion with other persons, firms, or corporations; that Proposer has carefully examined the entire Request for Proposal; that Proposer has informed itself fully in regard to all conditions pertaining to the Work and the place where it is to be performed; and that with this representation, the undersigned makes this Proposal. These prices shall cover all expenses incurred in performing the Work required under the Contract Documents, of which this Proposal and Form are a part.

The undersigned agrees and covenants that the Contract Time shall commence on delivery of the City of Waterbury's written notice to proceed, which shall occur after contract execution by both parties.

The undersigned acknowledges receipt of addenda numbered: (insert date)

1 _____ 4 _____

2 _____ 5 _____

3 _____ 6 _____

All Work for this Project shall be performed at the Proposal Prices as described in the Proposal Documents.

The undersigned hereby certifies under the penalties of perjury that this Proposal is in all respects bona fide, fair and made without collusion or fraud with any other person. As used in this section, the work "person" shall mean any natural person, joint venture, partnership, corporation, or other business or legal entity.

45-4631087
Social Security Number
or Federal Identification Number

Signature of Individual or Corporate Name

Corporate Officer
(if applicable)

City notice of acceptance should be mailed, telegraphed or delivered to the undersigned Proposer at the following address:

Name Hillview Property Maintenance
By: David Behlman, Owner
(Title)
Business Address: 72 Barrington Rd, Harwinton CT, 06791
(City, State, Zip Code)

Phone: 203-206-5668
Email: hillviewpropmaint@yahoo.com
Date: 8/31/20

Note: If the Proposer is a corporation, indicate State of incorporation under signature, and affix corporate seal; if a partnership, give full names and residential addresses, if different from business address.

REQUEST FOR PROPOSAL
#8890
BY
THE CITY OF WATERBURY
Public Works Department
On-Call Tree Services
Attachment D

Insurance Requirements

Contractor/Vendor shall agree to maintain in force at all times during the contract the following minimum coverages and shall name the City of Waterbury as Additional Insured on a primary and non-contributory basis to all policies, except Workers Compensation. All policies should also include a Waiver of Subrogation. Insurance shall be written with Carriers approved in the State of Connecticut and with a minimum AM Best's rating of "A"VIII.

If any policy is written on a "Claims Made" basis, the policy must be continually renewed for a minimum of two (2) years from the completion date of this contract. If the policy is replaced and/or the retroactive date is changed, then the expiring policy must be endorsed to extend the reporting period for claims for the policy in effect during the contract for two (2) years from the completion date.

Original, completed Certificates of Insurance must be presented to the City of Waterbury prior to contract issuance. Contractor/Vendor agrees to provide replacement/renewal certificates at least 30 days prior to the expiration date of the policies. Should any of the above described policies be cancelled, limits reduced or coverage altered, 30 days written notice must be given to the City of Waterbury.

General Liability:	$1,000,000 each Occurrence $2,000,000 General Aggregate $2,000,000 Products/ Completed Operations Aggregate
Auto Liability:	$1,000,000 Combined Single Limit each Accident Any Auto, All Owned and Hired Autos
Workers Compensation:	WC Statutory Limits Employer Liability (EL) $1,000,000 EL each Accident $1,000,000 EL Disease each Employee $1,000,000 EL Disease Policy Limits
Excess/Umbrella Liability:	$1,000,000 each Occurrence $1,000,000 Aggregate

Wording for Additional Insured Endorsement and Waiver of Subrogation:
The City Waterbury is listed as an Additional Insured on a primary and non-contributory basis on all policies except Workers Compensation. All policies shall include a Waiver of Subrogation.

David Behlman, Owner
hillviewpropmaint@yahoo.com
203-206-5668
172 Burlington Rd, Harwinton, CT, 06791

1. Proposer Information:
   a. Firm Name: Hillview Property Maintenance, LLC
   b. Permanent Main Office Address: 172 Burlington Rd, Harwinton, Ct, 06791
   c. Date firm organized: January 1, 2012
   d. Legal form of ownership: Sole Proprietor, LLC
   e. Years in service under this name: 13 years
   f. License #: HIC.0635629
   g. Federal ID: 45-4631087

2. Experience, Expertise and Capabilities:
   13 years residential and commercial tree removal services

3. Equipment list:
   a. 2021 International Bucket Truck w/ 75' WH
   b. 2022 Ford F550 Chipper Truck w/ 16 yd capacity
   c. 2016 Ford F550 Chipper Truck w/ 16 yd capacity
   d. 2016 Bandit 1390XP Chipper w/ 15" capacity and winch
   e. 2018 Bandit 18XP Chipper w/ 18" capacity and winch
   f. 2007 Sterling Log Truck w/ 22' body and Prentice 2124 Loader
   g. Bobcat S185 w/ Log/Brush Grapple
   h. Volvo EC55 Mini Excavator w/ Log/Brush Grapple

CERTIFICATE OF LIABILITY INSURANCE

DATE (MM/DD/YYYY): 08/31/2026

THIS CERTIFICATE IS ISSUED AS A MATTER OF INFORMATION ONLY AND CONFERS NO RIGHTS UPON THE CERTIFICATE HOLDER. THIS CERTIFICATE DOES NOT AFFIRMATIVELY OR NEGATIVELY AMEND, EXTEND OR ALTER THE COVERAGE AFFORDED BY THE POLICIES BELOW. THIS CERTIFICATE OF INSURANCE DOES NOT CONSTITUTE A CONTRACT BETWEEN THE ISSUING INSURER(S), AUTHORIZED REPRESENTATIVE OR PRODUCER, AND THE CERTIFICATE HOLDER.

IMPORTANT: If the certificate holder is an ADDITIONAL INSURED, the policy(ies) must be endorsed. If SUBROGATION IS WAIVED, subject to the terms and conditions of the policy, certain policies may require an endorsement. A statement on this certificate does not confer rights to the certificate holder in lieu of such endorsement(s).

PRODUCER McCormack Insurance Agency Inc 73 Meadow st Naugatuck, CT 06770	CONTACT NAME: John McCormack PHONE (A/C, No, Ext): (203) 720-0100 FAX (A/C, No): (203) 723-7665 E-MAIL ADDRESS: john.mccormack.qugm@statefarm.com
	INSURER(S) AFFORDING COVERAGE — NAIC #
	INSURER A : State Farm Fire and Casualty Company — 25143
INSURED Hillview Property Maintenance LLC 172 Burlington RD Harwinton, CT 06791	INSURER B : The Hartford
	INSURER C : State Farm Mutual Automobile Insurance Company — 25178
	INSURER D :
	INSURER E :
	INSURER F :

COVERAGES — CERTIFICATE NUMBER: — REVISION NUMBER:

THIS IS TO CERTIFY THAT THE POLICIES OF INSURANCE LISTED BELOW HAVE BEEN ISSUED TO THE INSURED NAMED ABOVE FOR THE POLICY PERIOD INDICATED. NOTWITHSTANDING ANY REQUIREMENT, TERM OR CONDITION OF ANY CONTRACT OR OTHER DOCUMENT WITH RESPECT TO WHICH THIS CERTIFICATE MAY BE ISSUED OR MAY PERTAIN, THE INSURANCE AFFORDED BY THE POLICIES DESCRIBED HEREIN IS SUBJECT TO ALL THE TERMS, EXCLUSIONS AND CONDITIONS OF SUCH POLICIES. LIMITS SHOWN MAY HAVE BEEN REDUCED BY PAID CLAIMS.

INSR LTR	TYPE OF INSURANCE	ADDL INSR	SUBR WVD	POLICY NUMBER	POLICY EFF (MM/DD/YYYY)	POLICY EXP (MM/DD/YYYY)	LIMITS	
A	GENERAL LIABILITY						EACH OCCURRENCE	$
	[X] COMMERCIAL GENERAL LIABILITY						DAMAGE TO RENTED PREMISES (Ea occurrence)	$
	[ ] CLAIMS-MADE [X] OCCUR						MED EXP (Any one person)	$
							PERSONAL & ADV INJURY	$
							GENERAL AGGREGATE	$
	GEN'L AGGREGATE LIMIT APPLIES PER:						PRODUCTS - COMP/OP AGG	$
	[X] POLICY [ ] PRO-JECT [ ] LOC							$
C	AUTOMOBILE LIABILITY	Y	Y	076 5745-F06-07	06/06/2026	12/06/2026	COMBINED SINGLE LIMIT (Ea accident)	$
	[ ] ANY AUTO						BODILY INJURY (Per person)	$ 1,000,000
	[X] ALL OWNED AUTOS [ ] SCHEDULED AUTOS						BODILY INJURY (Per accident)	$ 1,000,000
	[ ] HIRED AUTOS [ ] NON-OWNED AUTOS						PROPERTY DAMAGE (Per accident)	$ 1,000,000
								$
	[ ] UMBRELLA LIAB [ ] OCCUR						EACH OCCURRENCE	$
	[ ] EXCESS LIAB [ ] CLAIMS-MADE						AGGREGATE	$
	[ ] DED [ ] RETENTION $							$
B	WORKERS COMPENSATION AND EMPLOYERS' LIABILITY Y/N			6S60UB-0W56274-4-26	04/01/2026	04/01/2027	[ ] WC STATU-TORY LIMITS [ ] OTH-ER	
	ANY PROPRIETOR/PARTNER/EXECUTIVE OFFICE/MEMBER EXCLUDED? Y / N/A	Y	Y				E.L. EACH ACCIDENT	$ 1,000,000
	(Mandatory in NH) If yes, describe under DESCRIPTION OF OPERATIONS below						E.L. DISEASE - EA EMPLOYEE	$ 1,000,000
							E.L. DISEASE - POLICY LIMIT	$ 1,000,000

DESCRIPTION OF OPERATIONS / LOCATIONS / VEHICLES (Attach ACORD 101, Additional Remarks Schedule, if more space is required)

The City of Waterbury is listed as an Additional insured on a primary and non-contributory basis. This policy includes waiver of subrogation for the city of Waterbury

CERTIFICATE HOLDER

CITY OF WATERBURY
235 GRAND ST
WATERBURY, CT 06702

CANCELLATION

SHOULD ANY OF THE ABOVE DESCRIBED POLICIES BE CANCELLED BEFORE THE EXPIRATION DATE THEREOF, NOTICE WILL BE DELIVERED IN ACCORDANCE WITH THE POLICY PROVISIONS.

AUTHORIZED REPRESENTATIVE

©1988-2010 ACORD CORPORATION. All rights reserved.

ACORD

CERTIFICATE OF LIABILITY INSURANCE

DATE (MM/DD/YYYY): 8/31/2026

THIS CERTIFICATE IS ISSUED AS A MATTER OF INFORMATION ONLY AND CONFERS NO RIGHTS UPON THE CERTIFICATE HOLDER. THIS CERTIFICATE DOES NOT AFFIRMATIVELY OR NEGATIVELY AMEND, EXTEND OR ALTER THE COVERAGE AFFORDED BY THE POLICIES BELOW. THIS CERTIFICATE OF INSURANCE DOES NOT CONSTITUTE A CONTRACT BETWEEN THE ISSUING INSURER(S), AUTHORIZED REPRESENTATIVE OR PRODUCER, AND THE CERTIFICATE HOLDER.

IMPORTANT: If the certificate holder is an ADDITIONAL INSURED, the policy(ies) must have ADDITIONAL INSURED provisions or be endorsed. If SUBROGATION IS WAIVED, subject to the terms and conditions of the policy, certain policies may require an endorsement. A statement on this certificate does not confer rights to the certificate holder in lieu of such endorsement(s).

PRODUCER	CONTACT NAME:	
Wolcott Insurance Group llc 4 Brookdale Wolcott CT 06716	PHONE (A/C, No, Ext): (203) 879-2501	FAX (A/C, No):
	E-MAIL ADDRESS: certs@wigct.com	

INSURER(S) AFFORDING COVERAGE	NAIC #
INSURER A: UNITED OHIO INS CO	13072
INSURER B:	
INSURER C:	
INSURER D:	
INSURER E:	
INSURER F:	

INSURED

Hillview Property Maintenance, LLC
172 Burlington Rd

Harwinton CT 06791

COVERAGES **CERTIFICATE NUMBER:** **REVISION NUMBER:**

THIS IS TO CERTIFY THAT THE POLICIES OF INSURANCE LISTED BELOW HAVE BEEN ISSUED TO THE INSURED NAMED ABOVE FOR THE POLICY PERIOD INDICATED. NOTWITHSTANDING ANY REQUIREMENT, TERM OR CONDITION OF ANY CONTRACT OR OTHER DOCUMENT WITH RESPECT TO WHICH THIS CERTIFICATE MAY BE ISSUED OR MAY PERTAIN, THE INSURANCE AFFORDED BY THE POLICIES DESCRIBED HEREIN IS SUBJECT TO ALL THE TERMS, EXCLUSIONS AND CONDITIONS OF SUCH POLICIES. *LIMITS SHOWN MAY HAVE BEEN REDUCED BY PAID CLAIMS. LIMITS SHOWN ARE INCLUSIVE OF AMOUNTS REQUESTED BY THE CERTIFICATE HOLDER AND MAY NOT REFLECT POLICY LIMIT AMOUNTS IN EXCESS OF THOSE REQUESTED. *Not Applicable in WY

INSR LTR	TYPE OF INSURANCE	ADDL INSD	SUBR WVD	POLICY NUMBER	POLICY EFF (MM/DD/YYYY)	POLICY EXP (MM/DD/YYYY)	LIMITS	
A	X COMMERCIAL GENERAL LIABILITY CLAIMS-MADE X OCCUR GEN'L AGGREGATE LIMIT APPLIES PER: X POLICY PRO-JECT LOC OTHER:	Y	Y	BP 0049461	03/29/2026	03/29/2027	EACH OCCURRENCE	$ 1,000,000
							DAMAGE TO RENTED PREMISES (Ea occurrence)	$ 50,000
							MED EXP (Any one person)	$ 5,000
							PERSONAL & ADV INJURY	$ 1,000,000
							GENERAL AGGREGATE	$ 2,000,000
							PRODUCTS - COMP/OP AGG	$ 2,000,000
								$
	AUTOMOBILE LIABILITY ANY AUTO OWNED AUTOS ONLY HIRED AUTOS ONLY SCHEDULED AUTOS NON-OWNED AUTOS ONLY						COMBINED SINGLE LIMIT (Ea accident)	$
							BODILY INJURY (Per person)	$
							BODILY INJURY (Per accident)	$
							PROPERTY DAMAGE (Per accident)	$
								$
A	X UMBRELLA LIAB OCCUR EXCESS LIAB CLAIMS-MADE DED RETENTION $	Y	Y	CX 0005610	03/29/2026	03/29/2027	EACH OCCURRENCE	$ 1,000,000
							AGGREGATE	$ 1,000,000
								$
	WORKERS COMPENSATION AND EMPLOYERS' LIABILITY ANY PROPRIETOR/PARTNER/EXECUTIVE OFFICER/MEMBER EXCLUDED? (Mandatory in NH) Y / N If yes, describe under DESCRIPTION OF OPERATIONS below	N/A					PER STATUTE OTH-ER	
							E.L. EACH ACCIDENT	$
							E.L. DISEASE - EA EMPLOYEE	$
							E.L. DISEASE - POLICY LIMIT	$

DESCRIPTION OF OPERATIONS / LOCATIONS / VEHICLES (ACORD 101, Additional Remarks Schedule, may be attached if more space is required)

CERTIFICATE HOLDER

City Of Waterbury
235 Grand St

Waterbury CT 06702

CANCELLATION

SHOULD ANY OF THE ABOVE DESCRIBED POLICIES BE CANCELLED BEFORE THE EXPIRATION DATE THEREOF, NOTICE WILL BE DELIVERED IN ACCORDANCE WITH THE POLICY PROVISIONS.

AUTHORIZED REPRESENTATIVE

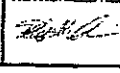

© 1988-2025 ACORD CORPORATION. All rights reserved.
The ACORD name and logo are registered marks of ACORD

POLICY NUMBER: **BP 0049461 00**

BUSINESSOWNERS
BP UO 74 (10-16)

THIS ENDORSEMENT CHANGES THE POLICY. PLEASE READ IT CAREFULLY.

BLANKET WAIVER OF SUBROGATION

This endorsement modifies insurance provided under the following:

Businessowners Coverage Form, **BP 00 03.**

This coverage is subject to all the terms, deductibles, exclusions, and conditions applicable to this policy, except where otherwise provided.

A. The following is added to Paragraph **K. Transfer Of Rights Of Recovery Against Others To Us** under **SECTION III - COMMON POLICY CONDITIONS:**

3. We waive any right of recovery because of payments we make under this policy for injury or damage arising out of your ongoing operations or "your work" included in the "products-completed operations hazard" that we may have against any person or organization with whom you have agreed in a written contract or written agreement to waive your rights of recovery but only if the "bodily injury" or "property damage" occurs, or offense giving rise to "personal and advertising injury" is committed subsequent to the execution of the written contract or agreement.

Includes copyrighted material of Insurance Services Office, Inc., with its permission.

THIS ENDORSEMENT CHANGES THE POLICY. PLEASE READ IT CAREFULLY.

PRIMARY AND NON-CONTRIBUTORY

This endorsement modifies insurance provided under the following:

Businessowners Coverage Form, **BP 00 03.**

This coverage is subject to all the terms, deductibles, exclusions, and conditions applicable to this policy, except where otherwise provided.

Paragraph **2.** under **SECTION III - COMMON POLICY CONDITIONS, H. Other Insurance** is deleted and replaced with the following:

2. Business Liability Coverage

a. Where required by a written contract or written agreement entered into before the applicable loss, this insurance is primary and noncontributory as respects any other insurance policy issued to an additional insured.

Otherwise, **2.b.** below applies.

b. This insurance is excess over any of the other insurance available to the additional insured whether primary, excess, contingent, or on any other basis.

When this insurance is excess, we will have no duty to defend any claim or "suit" that any other insurer has a duty to defend. If no other insurer defends, we will do so. However, we will be entitled to the insured's rights against all those other insurers.

We will pay our share of the amount of loss, if any, that exceeds the sum of:

(1) the total amount that all such other insurance would pay for the loss in the absence of this insurance; and

(2) the total of all deductibles and self-insured amounts required by such other insurance.

We will share the remaining loss with any other insurance that is not described in this excess insurance provision and was not bought specifically to apply in excess of the limits shown on the declarations of this Businessowners policy.

Includes copyrighted material of Insurance Services Office, Inc., with its permission.

United Ohio Insurance Co.

BUSINESSOWNERS DECLARATION

Named Insured	Policy Number	Policy Period From	To
HILLVIEW PROPERTY MAINTENANCE, LLC	BP 0049461 02	03/29/2025	03/29/2026

POLICY INTERESTS

Additional Insured
CITY OF WATERBURY
235 GRAND ST
WATERBURY CT 06702

Premises 1

Issued Date: 09/11/2025

POLICY NUMBER: **BP 0049461 02**

BUSINESSOWNERS
BP 04 51 01 06

THIS ENDORSEMENT CHANGES THE POLICY. PLEASE READ IT CAREFULLY.

ADDITIONAL INSURED – OWNERS, LESSEES OR CONTRACTORS – WITH ADDITIONAL INSURED REQUIREMENT IN CONSTRUCTION CONTRACT

This endorsement modifies insurance provided under the following:

BUSINESSOWNERS COVERAGE FORM

The following is added to Paragraph **C. Who Is An Insured** in **Section II – Liability:**

3. Any person(s) or organization(s) for whom you are performing operations is also an additional insured, if you and such person(s) or organization(s) have agreed in writing in a contract or agreement that such person(s) or organization(s) be included as an additional insured on your policy. Such person(s) or organization(s) is an additional insured only with respect to liability for "bodily injury", "property damage" or "personal and advertising injury" caused, in whole or in part, by:

   a. Your acts or omissions; or

   b. The acts or omissions of those acting on your behalf;

   in the performance of your ongoing operations for the additional insured.

A person's or organization's status as an insured under this endorsement ends when your operations for that insured are completed or the contractor's agreement is terminated.

Ó ISO Properties, Inc., 2004

Attachment E

REQUEST FOR PROPOSAL #8890
BY
The City of Waterbury Public Works Department
On-Call Tree Services

(Must be submitted as part of Proposal in a separate sealed envelope, marked "Confidential: Price Proposal.")

Date: 8/31/20

Kevin McCaffery
Director of Purchasing
City of Waterbury
235 Grand Street, Room 103
Waterbury, CT 06702

Sir:

Pursuant to and in compliance with your RFP, the Undersigned,

Millview Property Maintance
(Print or Type Company/Corporate Name)

172 Burlington rd
(Print or Type Business Address)
Harwinton, CT

06791

having carefully examined all the RFP Documents, together with all Addenda, as acknowledged on Attachment C, and having informed itself fully in regard to all conditions and related requirements pertaining to the performance of services required under this RFP; and that with this representation, the undersigned makes this Proposal, as follows:

[Proposal continued on following page(s)]

REQUEST FOR PROPOSAL #8890
BY
The City of Waterbury
Public Works Department On-Call Tree Services

Price Proposal

Description of Service	Regular Rate	Emergency Rate
Pruning and Tree Removal (Includes a crew chief, climber & grounds man, ~~10~~ 15 cubic yard box truck & chipper and ~~60~~ 75' aerial lift	$ 350 /hr. $ 2,800/Day	$ 675 /hr.
Ground Cleanup (includes a crew chief and a ground man, ~~10~~ 15 cubic yard box truck & chipper) 18" chipper	$ 350 /hr. $ 2,800 /Day	$ 625 /hr.

Additional Required Pricing Information: These rates will be used to add to or subtract from "crew rates" where man power is otherwise inconsistent with these specifications

Description of Service	Regular Rate	Emergency Rate
Crew Chief/Bucket Operator	$ 95 /hr.	$ 175 /hr.
Climber	$ 150 /hr.	$ 300 /hr.
Grounds Men	$ 75 /hr.	$ 150 /hr.
Flag Man	$ 60 /hr.	$ 125 /hr.
EQUIPMENT	Regular Rate	Emergency Rate
Aerial Lift- 70ft w/ working distance	$ 150/hr	$ 300/hr
Chipper & ~~12~~ 15 yard Box Truck 18" 15yd	$ 150/hr	$ 300/hr

REQUEST FOR PROPOSAL #8890
BY
The City of Waterbury
Public Works Department On-Call Tree Services

Price Proposal continued

Whole Tree Chipper- 14" 18" log capacity	$ 135/hr	$ 250/hr
Stump Grinder	$ 1,600/Day	$
Crane	$ 2,500/Day	$
Multi loader/articulating loader with grapple and winch Mini excavator with grapple	$ 1,500/day	$

45-4631087
Social Security Number
or Federal Identification Number

Signature of Individual or
Corporate Name

Hillview Property Maintenance LLC
Company Name

Corporate Officer
(if applicable)

By: David Behlman - owner
(Title)
172 Burlington Rd
(Business Address)
Harwinton CT 06791
(City, State, Zip Code)

Date: 8-31-26

Email: Hillviewpropmaint@yahoo.com

END OF ATTACHMENT E

SPECIAL CONDITIONS

INDEX TO SPECIAL CONDITIONS

ARTICLE		PAGE
1.	SPECIAL NOTE	SC-1
2.	PERMITS	SC-1
3.	CONSTRUCTION STAKE OUT	SC-1
4.	SITE RESTORATION	SC-1
5.	CITY NOTIFICATION – BACKFILLING	SC-1
6.	PUBLIC USE OF EXISTING PUBLIC FACILITIES	SC-1
7.	ACCESS TO PRIVATE & PUBLIC PROPERTY	SC-1
8.	WINTER SHUTDOWN	SC-2
9.	OWNER CONTROLLED CONTINGENCY ALLOWANCE	SC-2
10.	CHANGES TO THE WORK	SC-2
11.	LAYDOWN AREAS / MATERIAL STORAGE	SC-2
12.	ADDENDUM TO GENERAL CONDITION ARTICLES 11 & 95	SC-3
13.	ADDENDUM TO GENERAL CONDITIONS ARTICLE 1	SC-3
14.	CITY DESIGN STANDARDS, SPECIFICATIONS AND DETAILS	SC-3
15.	ADDENDUM TO GENERAL CONDITIONS ARTICLE 2	SC-3
16.	ADDENDUM TO GENERAL CONDITION ARTICLE 8, 9, 10	SC-3
17.	MOBILIZATION AND DEMOBILIZATION	SC-3
18.	IMPROVEMENT LOCATION AND TOPOGRAPHICAL SURVEY	SC-3
19.	ADDENDUM TO GENERAL CONDITION ARTICLE 93	SC-3
20.	INTENT OF DRAWINGS	SC-3
21.	ADDENDUM TO GENERAL CONDITION ARTICLES 31	SC-3
22.	ADDENDUM TO GENERAL CONDITIONS	SC-4

ARTICLE 1. SPECIAL NOTE

These Special Conditions shall be subject to all requirements of the Contract, amend or supplement the General Conditions, and modify all Contract Documents which follow them numerically, as set forth in Section 1.2 of the Contract. The terms used in these Special Conditions which are defined in the Contract or General Conditions have the meanings assigned to them in said documents. All provisions of the General Conditions which are not so amended or supplemented remain in full force and effect.

This section applies equally and specifically to all contractors supplying labor and/or equipment and/or materials for this Project; and to all of the Contract Documents. All Contract Documents apply to this Section. Where items of the Contract are repeated, it is intended to call particular attention to or qualify them; it is not intended that any other parts of the Contract shall be assumed to be omitted if not repeated herein.

Unless expressly provided for otherwise, and regardless if not expressly stated in each Article herein, the costs associated with all work and/or services required under the Special Conditions shall be considered as included in the overall cost of the Contract items. No separate or additional payment will be made for this work and/or services.

ARTICLE 2. PERMITS

The Contractor shall obtain all applicable Federal, State and local permits and registrations necessary to complete the project at no additional cost to the City. The cost of obtaining and maintaining the permits shall be included in the Contract Amount.

The Contractor shall give all notices and comply with all laws, ordinances, rules and regulations including building and fire safety codes relating to the performance of the Work.

ARTICLE 3. CONSTRUCTION STAKE OUT - NOT USED

ARTICLE 4. SITE RESTORATION

The Contractor will blend the new work into the existing ground surface and replace any adjacent disturbed materials that may have been damaged or irregular do to construction and/or new installations.

ARTICLE 5. CITY NOTIFICATION - BACKFILLING

Before backfilling any excavated area and after an improvement has been installed the contractor shall notify the City when a backfill operation is to occur. A City representative will make one observation for each excavated area.

ARTICLE 6. PUBLIC USE OF EXISTING PUBLIC FACILITIES

The Contractor shall limit his work area to the site of the construction and its immediate vicinity. No equipment or construction activities are allowed on the existing public facilities, such as athletic fields without prior written approval by the City. No equipment or storage is allowed outside of the designated construction area without prior written approval by the City. The number and location(s) of storage containers shall be approved by the City.

ARTICLE 7. ACCESS TO PRIVATE & PUBLIC PROPERTY

Throughout the duration of Construction, the Contractor shall maintain access to all businesses, places of worship, schools and private residences, etc. in the project area. Particular attention is noted for funeral processions, wedding processions, and other similar activities.

Where required by the City, Contractor shall also conduct regular coordination meetings with Residents, Owners and Operators of businesses and other operations to coordinate active work periods.

Contractor shall also provide and place temporary ramps at driveways or other locations where, in the opinion of the City, there is a need to provide safe access until the permanent handwork is completed.

ARTICLE 8. WINTER SHUTDOWN

No 'winter shutdown' will be permitted for this Project.

Any 'winter shutdown' authorized under this Article shall not change the "Contract Time" for the project. Any extension of the Contract Time must be by formal amendment to the Contract in accordance with the provisions of the Procurement Ordinance of the City of Waterbury.

ARTICLE 9. OWNER CONTROLLED CONTINGENCY ALLOWANCE

If an Owner Controlled Contingency Allowance ("OCCA") has been provided in the Contract, it is to provide an account for certain expenditures found necessary by and ordered done by the City. This item shall include any unforeseen work made necessary by changes in the plans or necessitated by site conditions. Work for which payment is included under other items shall not be considered for inclusion under this item.

Use of the OCCA requires the City's advance written authorization. Determination of amounts to be paid for work under this item shall be in accordance with Article 10 of the Special Conditions and at the sole discretion of the City.

Determination of amounts to be paid for work under this Article shall be agreed to in advance by the Contractor and City and shall not exceed amounts established in the OCCA. At project closeout, unused amounts remaining in the allowance shall be credited to the City by Final Change Order (as part of and so documented in Contractor's final payment request).

In no instance shall payments made pursuant to this Article result in an increase in the amount of the Contract Total Compensation or extension of Contract Time. Any increase above the Contract Total Compensation or Contract Time resulting from utilization of this Article must be by a duly authorized and executed Contract amendment in accordance with Section 27 of the Contract.

ARTICLE 10. CHANGES TO THE WORK

If the City authorizes changes to the work, the following shall apply:

The cost for changes to the work shall be either on a firm proposal agreed to by the City or based on a cost-plus-fee basis agreeable to the City. In the event the work is to be performed on a cost plus basis, the Contractor will perform, or cause to be performed by his subcontractors, such work at direct cost, plus the percentages set out below:

1. For work performed by the Contractor's own forces, direct cost plus Ten Percent (10 %).
2. For work performed by a subcontractor, the cost to the City shall be subcontractor cost to the Contractor, plus 5 %.

ARTICLE 11. LAYDOWN AREAS / MATERIAL STORAGE

A Laydown Area shall not impede traffic flow within the City streets. The Contractor may use these areas during construction and shall be required to restore any disturbed areas to a condition as good as or better than existing conditions.

Contractor shall also be required to clean up, restore, and make safe and usable all Laydown Areas as directed by the Engineer. This may include removing equipment, materials, tools, etc., from the any Laydown Area for a period to be determined by the City of Waterbury.

The City will not provide any staging area for Construction and/or Contractor operations. The Contractor shall provide its own staging/storage area. Lay down areas within the project's limits are allowed but require pre-approval from the City. In all cases, the Contractor shall be responsible for the protection of all materials, tools, etc. Materials received on site which are not immediately installed shall be carefully and securely stored. All materials used throughout work shall be neatly stacked so as not to obstruct the progress of the work or endanger the public, adjacent property owners and tenants or the City.

The Contractor shall provide its own storage facilities and in all cases be responsible for the protection of all materials, tools, etc. The number and location(s) of storage containers shall be approved by the City. Materials received on site which are not immediately installed shall be carefully and securely stored. All materials used throughout work shall be neatly stacked so as not to obstruct the progress of the work or endanger the public or the City or City's employees or tenants. All deliveries of material, equipment, etc., shall be made to the Contractor and accepted only by him/her and only during working hours. City personnel will not receive or accept any materials or equipment, etc. at any time.

ARTICLE 12. ADDENDUM TO GENERAL CONDITIONS 11 and 95
Reference is made to General Condition Articles 11 – Temporary Utilities, and 95 – Temporary Water Supply. The Contractor shall be responsible for determining and supplying at no cost to the City all temporary utilities needed to maintain utility service to all adjacent property owners/tenants.

ARTICLE 13. ADDENDUM TO GENERAL CONDITIONS ARTICLE 1 – NOT USED

ARTICLE 14. CITY DESIGN STANDARDS, SPECIFICATIONS AND DETAILS – NOT USED

ARTICLE 15. ADDENDUM TO GENERAL CONDITIONS ARTICLE 2 – NOT USED

ARTICLE 16. ADDENDUM TO GENERAL CONDITIONS 8, 9 and 10
Reference is made to General Condition Article 8 – Sedimentation and Erosion Control, Article 9 – Protection of Environmental Resources and Article 10 - Environmental Protection Plan. The requirements of Articles 8, 9 and 10 shall not apply to this project; however, the Contractor shall responsible for any such requirements to the extent set forth in the Technical Specifications or elsewhere in the Contract Documents.

ARTICLE 17. MOBILIZATION AND DEMOBILIZATION
The costs of Mobilization and Demobilization for the project shall be included in the contract bid amount. No separate payment shall be made for Mobilization and/or Demobilization.

ARTICLE 18. IMPROVEMENT LOCATION AND TOPOGRAPHICAL SURVEY
Completion of an Improvement Location Survey is <u>not</u> required for this Project.

ARTICLE 19. ADDENDUM TO GENERAL CONDITIONS 93
In lieu of the daily reports required in Article 93 of the general conditions, the contractor shall provide said reports as provided in any issued applicable Task Orders.

ARTICLE 20. INTENT OF DRAWINGS - NOT USED

ARTICLE 21. ADDENDUM TO GENERAL CONDITION 31
Reference is made to General Condition Article 31 – Use of Premises and Removal of Debris. During the progress of the work, the Contractor shall keep the construction areas in a neat condition, free from accumulations of waste materials and rubbish. Lunch papers, bottles, lumber cut-offs, drinking cups and like rubbish shall be removed from the site daily. No alcoholic beverages will be permitted at the construction site(s).

On or before the completion of the work and before acceptance and final payment shall be made, the Contractor shall clean and remove, from the site and adjacent property all surplus and discarded materials, rubbish, and temporary structures and restore, in an acceptable manner, all property and leave the whole area in a neat and presentable condition.

ARTICLE 22. ADDENDUM TO GENERAL CONDITIONS
The following General Conditions Articles are not applicable to this RFP8388:

General Conditions Articles 1-4, 10, 15-17, 36, 44, 46-47, 53-54, 76-78, 84, 90, 94, 102, 105, 108, 109, and 113.

END OF SECTION

RFP # 8890

GENERAL CONDITIONS

INDEX TO GENERAL CONDITIONS

ARTICLE	TITLE	PAGE
1.	PLANS AND SPECIFICATIONS AT THE SITE	GC-1
2.	CONSTRUCTION PROGRESS SCHEDULE	GC-1
3.	ESTIMATED QUANTITIES	GC-2
4.	SCHEDULE OF VALUES; APPLICATION FOR PAYMENT	GC-2
5.	PARTIAL PAYMENTS	GC-2
6.	INSPECTION AND TESTS	GC-3
7.	UTILITIES	GC-3
8.	SEDIMENTATION AND EROSION CONTROL	GC-3
9.	PROTECTION OF ENVIRONMENTAL RESOURCES	GC-4
10.	ENVIRONMENTAL PROTECTION PLAN	GC-5
11.	TEMPORARY UTILITIES	GC-5
12.	ABBREVIATIONS	GC-5
13.	SUBSURFACE EXPLORATION	GC-7
14.	CONTRACT AND CONTRACT DOCUMENTS	GC-7
15.	SHOP DRAWINGS, CATALOG CUTS AND SAMPLES	GC-7
16.	CONTRACTOR'S TITLE TO MATERIALS	GC-8
17.	"OR EQUAL" CLAUSES	GC-8
18.	REPRESENTATIONS OF THE CONTRACTOR	GC-8
19.	PROTECTION OF WORK AND PROPERTY (EMERGENCY)	GC-9
20.	WEATHER CONDITIONS	GC-9
21.	SUBLETTING	GC-9
22.	SUBSTITUTE BOND	GC-10
23.	RIGHT TO WITHHOLD PAYMENTS	GC-10
24.	PAYMENTS BY CONTRACTOR	GC-10
25.	NOTICE OF WARNING	GC-10
26.	PROGRESS MEETINGS.	GC-10
27.	PERMITS	GC-10
28.	RIGHT TO USE THE WORK	GC-11
29.	PROVISIONS REQUIRED BY LAW	GC-11
30.	WAIVER	GC-11
31.	USE OF PREMISES AND REMOVAL OF DEBRIS	GC-11
32.	RIGHT OF WAY AND SUSPENSION OF WORK	GC-11
33.	CONSTRUCTION EQUIPMENT AND MACHINERY	GC-12

INDEX TO GENERAL CONDITIONS

ARTICLE	TITLE	PAGE
34.	GENERAL GUARANTEE	GC-12
35.	PROCEDURE IN CONSTRUCTION	GC-13
36.	APPRENTICES	GC-13
37.	CONTROL OF WORK	GC-13
38.	CITY'S CONTROL NOT LIMITED	GC-13
39.	AUTHORITY AND DUTIES OF INSPECTORS	GC-13
40.	INSPECTION AND CORRECTION OF WORK	GC-14
41.	CONTRACTOR'S OBLIGATIONS	GC-14
42.	TOILET ACCOMMODATIONS AND DRINKING WATER	GC-15
43.	SAFETY AND HEALTH REGULATIONS	GC-15
44.	OWNERSHIP OF DRAWINGS AND SPECIFICATIONS	GC-15
45.	RESIDENTS' PREFERENCE IN WORK ON OTHER PUBLIC FACILITIES	GC-15
46.	LISTING OF EMPLOYMENT OPENINGS	GC-15
47.	SERVICE OF PROCESS	GC-16
48.	CITY OF WATERBURY ORDINANCE CHAPTER 34	GC-16
49.	WAGE RATES	GC-16
50.	SCHEDULE AND POSTING OF MINIMUM WAGE RATES	GC-16
51.	COMPUTATION OF WAGES AND OVERTIME COMPENSATION	GC-17
52.	WAGE UNDERPAYMENTS AND ADJUSTMENTS	GC-17
53.	CONFORMANCE OF WORK	GC-17
54.	DIMENSIONS AND SCHEDULES	GC-17
55.	PROTECTION FROM STORM	GC-17
56.	PROTECTION OF WORK AND MATERIALS	GC-17
57.	FURTHER SAFEGUARDS	GC-17
58.	FIRST AID TO INJURED	GC-18
59.	CONFORMANCE WITH DIRECTIONS	GC-18
60.	COMPETENT HELP TO BE EMPLOYED	GC-18
61.	STREETS AND SIDEWALKS TO BE KEPT OPEN	GC-18
62.	LIGHTS, BARRIERS, FENCES, WATCHMEN & INDEMNITY	GC-18
63.	WORK OUTSIDE REGULAR HOURS	GC-19
64.	BUS LINE INTERFERENCE	GC-19
65.	COLD WEATHER WORK	GC-19
66.	BLASTING AND EXPLOSIVES	GC-19

INDEX TO GENERAL CONDITIONS

ARTICLE	TITLE	PAGE
67.	TUNNELING	GC-20
68.	RESERVED MATERIALS/EXCAVATED MATERIALS	GC-20
69.	OBSTRUCTIONS AND CROSSOVERS	GC-20
70.	DIRECTIONAL SIGNS AND LIGHTS	GC-21
71.	MAINTENANCE OF WORKPLACE	GC-21
72.	OPERATIONS AT SEVERAL POINTS	GC-21
73.	INTERFERENCE WITH EXISTING STRUCTURES	GC-21
74.	TURF, TOPSOIL AND OTHER REPLACEMENT ITEMS	GC-21
75.	MATERIALS	GC-21
76.	DEFECTIVE MATERIALS	GC-22
77.	INSPECTION AND TESTING OF FURNISHED MATERIALS.	GC-22
78.	SAMPLES AND ORDERING LISTS	GC-22
79.	SANITARY CONVENIENCES	GC-22
80.	FINISHING AND CLEANING UP	GC-22
81.	RIGHTS OF ACCESS	GC-23
82.	WORK BY OTHERS	GC-23
83.	WORK WITHIN THE LIMITS OF PRIVATE PROPERTY	GC-23
84.	LOADING	GC-24
85.	COMPLETION OF WORK	GC-24
86.	DUST AND SPILLAGE CONTROL	GC-24
87.	CARE OF THE WORK	GC-24
88.	EMERGENCY WORK	GC-24
89.	FIRE PREVENTION AND PROTECTION	GC-25
90.	PLANIMETER	GC-25
91.	SUPERINTENDENCE	GC-25
92.	CONTRACT ADMINISTRATION COSTS - OUTSIDE REGULAR HOURS	GC-25
93.	DAILY REPORTS	GC-25
94.	MATERIAL AND WORKMANSHIP	GC-25
95.	TEMPORARY WATER SUPPLY	GC-26
96.	FITTING AND COORDINATION OF WORK	GC-26
97.	ARCHEOLOGICAL FINDS	GC-26
98.	EXCAVATIONS NEAR UNDERGROUND UTILITIES	GC-26
99.	WATER QUALITY OF WELLS.	GC-27

INDEX TO GENERAL CONDITIONS

ARTICLE	TITLE	PAGE
100.	WORK IN STATE HIGHWAYS	GC-27
101.	EXISTING INSPECTION REPORTS	GC-27
102.	TEST REPORTS; CERTIFICATES OF COMPLIANCE AND SHIPPING LISTS	GC-27
103.	CLEANING FINISHED WORK	GC-27
104.	COMPLIANCE TO ACTS AND EXECUTIVE ORDERS	GC-27
105.	SEMI-FINAL INSPECTION / SUBSTANTIAL COMPLETION	GC-28
106.	CITY'S CERTIFICATE OF SUBSTANCIAL COMPLETION	GC-28
107.	LIMITED ACCEPTANCE OF WORK	GC-28
108.	FINAL INSPECTION	GC-29
109.	FINAL CHANGE ORDER	GC-29
110.	FINAL PAYMENT APPLICATION	GC-29
111.	FINAL COMPLETION/ CITY'S CERTIFICATE OF FINAL COMPLETION / NOTICE OF PROJECT ACCEPTANCE	GC-30
112.	ACCEPTANCE OF FINAL PAYMENT	GC-30
113.	10-HOUR OSHA CONSTRUCTION SAFETY AND HEALTH COURSE	GC-30

City of Waterbury

GENERAL CONDITIONS

INTRODUCTORY NOTE:

These General Conditions supplement the provisions and requirements of Contract and modify all Contract Documents which follow it numerically, as set forth in Section 1.2 of the Contract. The General Conditions may be amended, revised or supplemented by the Special Conditions which are project specific. The Contractor's attention is directed to the attached Special Conditions for any amendments, revisions or supplements to the General Conditions for this project. The terms used in these General Conditions which are defined in the Contract have the meanings assigned to them in said Contract.

This section applies equally and specifically to all contractors supplying labor and/or equipment and/or materials for this Project and all drawings, specifications and general provisions of the Contract apply to these General Conditions. Where items of the Contract are repeated, it is intended to call particular attention to or qualify them; it is not intended that any other parts of the Contract shall be assumed to be omitted if not repeated herein.

Unless expressly provided for otherwise in the Contract Documents, all costs associated with any work/services required or necessary under the General Conditions shall be considered as included in the Contract Amount (also referred to as Total Compensation). No separate or additional payment will be made for this work and/or services.

ARTICLE 1. PLANS AND SPECIFICATIONS AT THE SITE / AS-BUILT DRAWINGS

1.01 The Contractor shall maintain at the Project site two (2) copies of all Plans, Specifications, Addenda, approved Shop Drawings, Change Orders and other Modifications, Schedules and Instructions, in good order. One copy is to be marked to record all changes made during construction. These shall be available at all times to the Project Engineer and the City or their authorized representatives. At the conclusion of construction, the Contractor is to turn one (1) corrected set of all documents over to the Project Engineer.

ARTICLE 2. CONSTRUCTION PROGRESS SCHEDULE

2.01 Within seven (7) consecutive calendar days of the written Notice to Proceed, and prior to commencement of any work on site, the Contractor shall prepare and submit for the approval of the City three (3) copies of a complete Construction Progress Schedule which shall be comprised of a critical path method network. (At the same time, the Contractor shall submit the Schedule of Values, Sedimentation and Erosion Control Measures, Water Control Plan and Environmental Protection Plan, as outlined in the various Articles of these General Conditions).

2.02 The critical path of the Project must be identified on the Construction Progress Schedule which shall provide a workable plan for monitoring the progress of all the elements of the Project, establish and clearly display the critical elements of the Work, on which each part or division of the Work is expected to be started and completed, forecast completion of the elements of the Project, and match the Contract duration in time. The Construction Progress Schedule shall also indicate the logic of the work for the major elements and components of work under the Contract, such as the planned mobilization of plant and equipment, sequences of operations, procurement of materials and equipment, duration of activities, type of relationship, lag time (if any), and such other information as it is necessary to present a clear statement of the intended activities.

2.03 The schedule shall indicate all subcontractors to be utilized on the Contract and the portions of the Contract that they will be performing. The Contractor shall evaluate the status of the Project at least monthly, comparing it to the original schedule, which shall be revised as required. The Contractor shall notify the Project Engineer immediately of any circumstances that may affect the current schedule.

2.04 The Contractor shall perform the work of this Contract to satisfy the Construction Progress Schedule as approved by the Project Engineer. However, the Project Engineer and City reserve the right to amend and alter the Construction Progress Schedule, as approved, at any time and in a manner which the Engineer deems to be in the best interests of the City.

2.05 The Contractor shall be required to execute his work in accordance with the Construction Progress Schedule as prepared and in accordance with any additional requirements specified herein and approved by the Project Engineer.

The Construction Progress Schedule shall forecast the times for doing each portion of the work. The Contractor shall arrange the work under this Contract to conform with the Construction Progress Schedule, as it may be revised by the Engineer from time to time, at no additional expense to the City.

2.06 The revised Construction Project Schedule shall take some or all of the following actions to demonstrate the manner in which an acceptable rate of progress will be regained, by the following methods:

i. Increase construction manpower in such quantities and crafts as shall substantially eliminate the backlog of work and meet the current Contract completion date.
ii. Increase the number of working hours per shift, the number of shifts per day, the number of work days per week, or the amount of construction equipment, or any combination of the foregoing
iii. Reschedule work items to achieve concurrent accomplishment of work activities.

2.07 Under no circumstances will the adding of equipment or construction forces, increasing the working hours, or employing any other method, manner, or procedure to return to the contractually required completion dates be a justification for additional compensation to the Contractor.

ARTICLE 3. ESTIMATED QUANTITIES

3.01 Any Estimated Quantities for the Project furnished by the City, including those provided on the Bid/Proposal Form, are approximate only and are: a) for procurement related comparison purposes only, b) given as a basis for the pricing and c) are not represented to be actual quantities for completion of the Work. Within the limits of available funds, the Contractor will be required to complete the Work at the unit prices provided in the Bid Form/or Price Proposal whether it involves quantities greater or lesser than the estimate. The Contractor will be compensated only for the actual quantity of authorized, and actually performed, and/or materials furnished.

ARTICLE 4. SCHEDULE OF VALUES; APPLICATION FOR PAYMENT

4.01 Within seven (7) consecutive calendar days after the Notice to Proceed, as a basis for estimating partial payments, the Contractor shall submit for the approval of the City a certified Schedule of Values, broken down into quantities and unit costs for the various parts of the work, divided as may be directed and aggregating the total sum of the Contract; and if required, he shall submit evidence supporting this schedule.

4.02 The Contractor's requisition for payment shall be submitted on forms supplied by the Contractor and approved by the City and shall be in such numbers of copies as may be designated by the City. Sample forms are included in the ITB/RFP Documents. Alternate payment application forms may be utilized provided they are approved by the City, in writing, prior to submission by the Contractor.

4.03 If the Project is funded by multiple funding sources, the Contractor may be required to submit separate requisitions for payment to each source, on the forms provided by each source and in accord with all requirements of each individual funding source.

4.04 For Lump Sum projects, the requirements for the Schedule of Values are further defined as follows: a) the Schedule of Values shall delineate the various tasks that comprise the lump sum items. Each item in the Schedule of Values shall include its proper share of overhead and profit. This schedule, when accepted by Project Engineer, shall only be used as a basis for Contractor's periodic payment applications. No payment will be made to Contractor until such Schedule has been submitted and accepted by Project Engineer, and b) the lump sum item shall be broken down sufficiently to provide a convenient and realistic means for determining the amount of work done during various stages of progress.

ARTICLE 5. PARTIAL PAYMENTS

5.01 The City will review the Contractor's monthly requisitions for Partial Payments to arrive at what is, in its opinion, a fair and just estimate of the materials suitably stored on the site and the amount of work performed on the Contract. At its discretion, the City may allow to be included in the monthly requisitions materials stored off the site. In the event the City allows the Contractor to include in its requisitions payments for materials stored off the site, the Contractor shall also submit any additional bonds and/or insurance certificates relating to off-site stored material, and follow such other procedures as may be required by the City.

5.02 In making such Partial Payments for the Project, retainage shall be held in the amount of 5% of the value of work completed to date. The Retainage does not include additional sums that the City may withhold due to the Contractors failure to comply with construction plans, specifications etc. deemed provisions of this contract.

5.03 Where prices are not broken down sufficiently in the Schedule of Values to accurately determine the value of work completed, Project Engineer will estimate the value of work completed and will deduct some amount so as to arrive at a conservative value which will allow City to easily complete the Work with the unpaid balance. When the required detail in the Schedule of Values is not provided by Contractor, Contractor agrees to accept Project Engineer's determinations.

ARTICLE 6. INSPECTION AND TESTS

6.01 All material and workmanship shall be subject to inspection, examination and testing by the City and/or Project Engineer (in addition to that required by the Specifications) any and all times during manufacture and/or construction and at any and all places where such manufacture and/or construction is carried on. Notice of the time of all tests to be made at the site shall be given to all interested parties.

6.02 Contractor must obtain the Engineer's approval of any sources of materials to be incorporated into the Project before beginning to use them for the Project.

6.03 If, at any time before issuance of a Notice of Project Acceptance by the City, the City and/or Project Engineer considers it necessary or advisable to examine any portion of the Project already completed by removing or testing out the same, the Contractor shall upon request furnish promptly all necessary facilities, labor and materials. If such work is found to be defective in any material respect because of a fault of the Contractor or any of its subcontractors, or if any work shall have been covered over without the approval or consent of the City (whether or not it is found to be defective), the Contractor shall be liable for testing costs and all costs of correction, including labor, material, services of required consultants, additional supervision and administrative costs.

6.04 For Projects that include material testing to ensure compliance with the Technical Specifications, the Contractor, unless expressly provided for otherwise in the Contract Documents, shall be responsible for all testing as required in the relevant sections of the Technical Specifications.

6.05 Without additional charge, the Contractor shall promptly furnish all reasonable facilities, labor and materials necessary to make tests safe and convenient. Special, full size and performance tests shall be as described in the Specifications.

ARTICLE 7. UTILITIES

7.01 The accuracy and completeness of the utility information shown on the Plans and/or otherwise provided by the City is not guaranteed. The Contractor shall make its own investigation of the extent and location of utilities and of the possibility of relocation work by the utility companies, and shall plan its operations accordingly. No claim for any delays, damage or extra work occasioned thereby will be allowed.

7.02 The Contractor shall allow others access to the Project for the purpose of placing, relocating or maintaining utilities, and he shall cooperate in every way in the performance of this Project.

7.03 The Contractor shall notify the utility owners well in advance of the time the Contractor proposes to perform any work which would endanger utility installations, and the Contractor shall cooperate with the utility owners in relocating and/or protecting such installations during construction operations.

7.04 No payment will be made to the Contractor for locating, protecting and making arrangements for relocating public utilities or for any delays caused thereby. The Contractor shall include all costs of this Project in other scheduled items of the Contract.

ARTICLE 8. SEDIMENTATION AND EROSION CONTROL

8.01 All watercourses shall be protected from sedimentation, both during and after construction. The Contractor shall

control erosion and sedimentation problems in accordance with Connecticut Guidelines for Soil Erosion and Sediment Control prepared by the Connecticut Council on Soil and Water Conservation, dated 2002, as amended.

8.02 The Contractor shall submit the Sedimentation and Erosion Control Plan for the approval of the Project Engineer within seven (7) consecutive calendar days after the Notice to Proceed.

8.03 The Contractor shall be responsible for providing silt fences, staked haybales and other temporary erosion control measures which may be required to properly complete this Project. No extra compensation will be allowed, due to water or precipitation levels fluctuation.

ARTICLE 9. PROTECTION OF ENVIRONMENTAL RESOURCES

9.01 The environmental resources within the Project boundaries and those affected outside the limits of permanent work under this Contract shall be protected during the entire period of this Contract. The Contractor shall confine its activities to areas defined by the Plans and Specifications. Environmental protection shall be as stated in the following subparagraphs:

A. Prior to the beginning of any construction, the Contractor shall identify all land resources to be preserved within the work area. The Contractor shall not remove, cut, deface, injure or destroy land resources including trees, shrubs, vines, grasses, top soil and land forms without special written permission from the property owner. No ropes, cables or guys shall be fastened or attached to any trees for anchorage unless specifically authorized in writing by the Project Engineer. Where such special emergency use is permitted, the Contractor shall provide effective protection for land and vegetation resources at all times as defined in the following subparagraphs.

B. Prior to any construction, the Contractor shall mark the areas that are not required to accomplish all work to be performed under the Contract. Isolated areas within the general work area which are to be saved and protected shall also be marked or fenced. Monuments and markers shall be protected before construction operations commence. Where construction operations are to be conducted during darkness, the markers shall be visible. The Contractor shall convey to its personnel the purpose of marking and/or protection of all necessary objects.

C. Trees, shrubs, vines, grasses, land forms and other landscape features indicated and defined on the Plans to be preserved shall be clearly identified by marking, fencing or wrapping with boards, or any other approved techniques.

D. Earthwork brought to final grade shall be finished as indicated and specified. Side slopes and back slopes shall be protected as soon as practicable upon completion of rough grading. All earth work shall be planned and conducted to minimize the duration of exposure of unprotected soils. Except in instances where the constructed feature obscures borrow areas, quarries and waste material areas, these areas shall not initially be cleared in total. Clearing of such areas shall progress in reasonably sized increments as needed to use the areas developed as approved by the City and/or Project Engineer.

E. Runoff from the construction site shall be controlled by the construction of diversion ditches, benches and berms to retard and divert runoff to protected drainage courses, and any measures required by area wide plans approved under Paragraph 208 of the Clean Water Act, as amended.

F. The Contractor shall construct or install all temporary erosion control features as indicated in the submitted Sedimentation and Erosion Control Plans, or directed by the City and/or Project Engineer. Temporary erosion control measures such as berms, dikes, drains, grassing and mulching shall be maintained until construction of the Project is completed.

G. The Contractor's field offices, staging areas, stockpile storage and temporary buildings shall be placed in areas designated on the submitted Plan. Temporary movement or relocation of the Contractor's facilities shall be made only on approval by the City and/or Project Engineer.

H. Borrow areas shall be managed to minimize erosion and to prevent sediment from entering nearby watercourses.

I. Spoil areas shall be managed and controlled to limit spoil areas and to prevent erosion of soil or sediment from entering nearby watercourses. Spoil areas shall be developed in accordance with the grading plan indicated on the Plans.

ARTICLE 10. ENVIRONMENTAL PROTECTION PLAN

10.01 Within seven (7) consecutive calendar days after the Notice to Proceed, and prior to commencement of any work on site, the Contractor shall submit an Environmental Protection Plan for the approval of the City in accordance with the provisions herein specified. The plan shall include but not be limited to the following:

A. A list of Federal, State and Local laws and regulations concerning environmental protection, pollution control and abatement that are applicable to the Contractor's proposed operations and the requirements imposed by those laws and regulations.

B. Methods for protection of features to be preserved within authorized work areas. The Contractor shall prepare a listing of methods to protect resources needing protection, i.e., trees, shrubs, vines, grasses and groundcover, landscape features, air and water quality, fish and wildlife, soil, historical, archeological and cultural resources.

C. Procedures to be implemented by the Contractor to provide the required environmental protection and to comply with applicable laws and regulations. The Contractor shall set out the procedures to be followed to correct pollution of the environment due to accident, natural causes or failure to follow the procedures set out in accordance with the Environmental Protection Plan.

D. The location of the nearest suitable solid waste disposal area and a permit allowing the Contractor to use those facilities.

E. Drawing showing locations of any proposed temporary excavations or embankments for haul roads, stream crossings, material storage areas, structures, sanitary facilities, and stockpiles of excess' or spoil materials.

F. Environmental monitoring plans for the job site, including land, water, air and noise monitoring as necessary, and as required by the Project Engineer.

G. Environmental monitoring and management plans for the any endangered wildlife or plant species as determined by CT DEEP, City or Project Engineer.

H. Traffic control plan when necessary.

I. Methods of protecting surface and ground water during construction activities.

J. Work area plan showing the proposed activity in each portion of the area and identifying the areas of limited use or nonuse. The plan should include measures for marking the limits of use areas.

ARTICLE 11. TEMPORARY UTILITIES

11.01 Unless expressly otherwise provided for in the Contract Documents the Contractor shall be responsible for determining and supplying at no cost to the City all temporary utilities of any nature whatsoever needed to complete the work. Unless otherwise provided for in the ITB/RFP Documents, all necessary temporary utilities shall be installed at the start of the Project.

ARTICLE 12. ABBREVIATIONS

12.01 Where one of the following abbreviations are used in the Contract Documents, it shall have the meaning set forth opposite each below:

AASHTO	American Association of State Highway and Transportation Officials
ACI	American Concrete Institute

AGA	American Gas Association
AIEE	American Institute of Electrical Project Engineers
AISC	American Institute of Steel Construction
API	American Petroleum Institute
ANSI	American National Standards Institute
ASCE	American Society of Civil Engineers
ASHRAE	American Society of Heating, Refrigeration and Air Conditioning Engineers
ASME	American Society of Mechanical Engineers
ASTM	American Society of Testing and Materials
AWG	American (or Brown and Sharpe) Wire Gauge
AWWA	American Water Works Association
CONNDOT	Connecticut Department of Transportation
DEP	Department of Environmental Protection
EDR	Equivalent Direct Radiation
EPA	Environmental Protection Agency
FWQA	Federal Water Quality Administration
IBR	Institute of Radiator and Boiler Manufacturers
MCB	Master Car Builders
NBS	National Bureau of Standards
NEC	National Electrical Code (latest edition)
NEMA	National Electrical Manufacturers Association
NEWWA	New England Water Works Association
NFPA	National Fire Protection Agency
NPT	National Pipe Thread
SMACNA	Sheet Metal and Air Conditioning Association
OS&Y	Outside Screw and Yoke
STL.WG	United States Steel Wire, Washburn and Moen, American Steel And Wire Companies and Roebling Gauge
USS GAUGE	United States Standard Gauge
WOG	Water, Oil, Gas
WSP	Water Steam Pressure

"Federal Specification" A Federal specification issued by the Federal Supply Services Administration, Washington, D.C.

ARTICLE 13. SUBSURFACE EXPLORATION

13.01 Where applicable, and if provided by the City, boring logs, probes and related information contain data regarding subsurface conditions at the dates and location indicated. This information is shown for the convenience of the Contractor, but is not guaranteed to be correct or complete, and it is not warranted that it represents a true or approximately true picture of the actual subsurface conditions to be encountered.

ARTICLE 14. CONTRACT AND CONTRACT DOCUMENTS

14.01 The City's record copy of the Contract Documents shall control and shall be effective and binding on the Contractor. In the event that any provision in the Contract Documents conflict with any other provision therein, the priority of the documents shall be in accordance with Section 1.2 of the Contract.

ARTICLE 15. SHOP DRAWINGS, CATALOG CUTS AND SAMPLES

15.01 The Contractor shall promptly submit to the Project Engineer five copies of each submittal prepared in accordance with the approved schedule. After examination of such submittal by the Project Engineer and the return thereof, the Contractor shall make such corrections to the submittal as have been indicated and shall furnish the Project Engineer with five corrected copies. If requested by the Project Engineer, the Contractor must furnish additional copies. Regardless of corrections made on, or approvals given to, such submittal by the Project Engineer, the Contractor shall nevertheless be responsible for the accuracy of such submittal. The Contractor shall also be responsible for the submittal's conformity to the Submittal and Specifications, unless the Contractor notifies the Project Engineer in writing of any deviations at the time of submission of the submittal.

15.02 Submittal of all fabricated work shall be submitted to the Project Engineer and no work shall be fabricated unless it is done at the Contractor's own risk until approval has been given by the Project Engineer and City.

15.03 The Contractor shall submit all submittals on dates sufficiently in advance of requirements in order to enable the Project Engineer and City to properly review them. This period shall include time to correct, resubmit and recheck, if necessary, and no claim for delay will be granted to the Contractor because of the Contractor's failure in this respect. The Project Engineer and City will be given a minimum of fourteen (14) consecutive calendar days for the initial review of each submitted submittal.

15.04 All submitted submittals must bear the approval stamp of the Contractor and reference conformance to the applicable provisions of the Specifications as evidence that the Contractor has checked the drawings. Any drawings submitted without this stamp of approval will not be considered and will be returned to the Contractor for resubmission. If the submittals show variations from the requirements of the Contract Documents because of standard shop practice or other reason, the Contractor shall make specific mention of such variation in the letter of submission to the Project Engineer. If the variation is acceptable to the Project Engineer and City, suitable action may be taken for proper adjustment. If not acceptable, the Contractor shall not be relieved from the responsibility for executing the work in accordance with the Contract Documents, although such submittals had been approved.

15.05 Where submittals are submitted by the Contractor that indicate a departure from the Contract Drawings which the Project Engineer deems to be a minor adjustment and in the City's interest and not involving a change in the Contract price or an extension in time, then the Project Engineer may approve the drawings. Such approval will contain, in substance the following:

> The modification shown on the attached drawings is approved in The interest of the City to effect an improvement for the project and is ordered with the understanding that it does not involve any change in the Contract price or time. The modification is generally subject to all Contract stipulations and covenants and it is without prejudice to any and all rights of the City under the Contract.

The approval of submittals will be general and shall not relieve the Contractor from the responsibility for

adherence to the Contract nor of the responsibility for any errors that may exist.

15.06 The Contractor agrees to hold the Project Engineer and the City harmless and to defend them against damage or claims for damages arising out of injury to others or to property of third parties which result from errors on shop or working drawings, whether or not they have been approved by the Project Engineer and/or the City.

15.07 Working Drawings. When required by the Contract or when ordered to do so by the City Representative, the Contractor shall prepare and submit 4 copies of the working drawings to the City Representative for review. These drawings shall be submitted sufficiently (at least 15 consecutive calendar days) in advance of the proposed use, to allow for their review, and any necessary revisions, without delay of the Project. No work covered by these working drawings shall be done until the drawings have been submitted to the City Representative for review and the City Representative's comments have been appropriately taken into account and implemented. The furnishing of the working drawings shall not serve to relieve the Contractor of any part of its responsibilities under the Contract.

ARTICLE 16. CONTRACTOR'S TITLE TO MATERIALS

16.01 No material, supplies or equipment for the work shall be purchased by the Contractor, or by any Subcontractor, subject to any chattel mortgage or under any conditional sale or other agreement by which an interest therein or in any part thereof is retained by the seller or supplier. The Contractor warrants good title to all material, supplies and equipment installed or incorporated in the work. The Contractor further warrants that, upon completion of all work, he will deliver the premises, together with all improvements and appurtenances constructed thereon, to the City free of any claims, liens, charges or encumbrances. The Contractor further warrants that neither the Contractor nor any person, firm or corporation furnishing any material, labor or equipment for any work covered by this Contract shall have a right to lien upon the premises or any improvement or appurtenance thereon.

ARTICLE 17. "OR EQUAL" CLAUSES

17.01 Unless otherwise provided for in the ITB/RFP Documents, the Contract will be on the basis of material and equipment described on the ITB/RFP Documents without consideration of possible substitute or "equal" items. However, subsequent to award of the Work, whenever a material or article required is specified or shown on the plans by using the name of a proprietary product or of a particular vendor or manufacturer, any materials or article which, in the sole discretion of the Project Engineer, is equal or superior to the specified item to material, may be considered an "equal." Requests for substitutions must be supported by evidence such as technical data, test results, or other pertinent information that demonstrate that the substitute offered is equal or better than the specification's requirements. Such items shall not be purchased or installed without the written approval of the Project Engineer. In all cases, only new materials shall be used for the work.

ARTICLE 18. REPRESENTATIONS OF THE CONTRACTOR

18.01 The Contractor represents and warrants:

(a) That he is financially solvent and that he is experienced and competent to perform the type of work or to furnish the plant, material or equipment to be performed or furnished by him; and

(b) That he is familiar with all Federal, State and municipal laws, ordinances, orders and regulations which may in any way affect the work of those employed therein, including but not limited to any special acts relating to the work or to the project of which it is a part; and

(c) That such permanent and temporary work required by the Contract Documents to be done can be satisfactorily constructed and be used for the purpose for which it is intended, and that such construction will not injure any person nor damage any property; and

(d) That he has carefully examined the drawings, specifications and addendum (or addenda) if any, and the site of the work, and that, from his own investigations, he has satisfied himself as to the nature, quality and quantity of surface and subsurface materials likely to be encountered; of the character of equipment required for the work; of other facilities needed for the performance of the work; of the general and local conditions and of all other materials which in any way may affect the work and its performance; and

(e) That he is aware of the hazards involved in the work and the danger to life and property both evident and inherent and that he will conduct the work in a careful and safe manner without injury to persons or property; and that he can provide the necessary equipment, labor and materials to complete the contract work within the specified contract duration.

ARTICLE 19. PROTECTION OF WORK AND PROPERTY (EMERGENCY)

19.01 The Contractor shall at all times safely guard and protect the City's property from injury or loss in connection with this contract. He shall at all times safely guard and protect his own work and that of adjacent property from damage. The Contractor shall replace or make good any such damage, loss or injury unless such is caused directly by errors contained in the Contract or by the City or his duly authorized representatives.

19.02 In case of an emergency that threatens loss or injury of property and/or safety of life, the Contractor will be allowed to act in a diligent manner without previous instructions from the City. He shall notify the City immediately thereafter.

19.03 Where the Contractor has not acted but has notified the City of an emergency threatening injury to persons or damage to the work or to any adjoining property, he shall act as instructed or as authorized by the City.

19.04 The amount of reimbursement claimed by the Contractor on account of any emergency action shall be determined in the manner provided elsewhere in the Contract Documents.

ARTICLE 20. WEATHER CONDITIONS

20.01 In case of temporary suspension of the work, or during inclement weather, or whenever the City shall direct, the Contractor shall carefully protect his work and materials against damage or injury from the weather. The Contractor shall cause all his subcontractors to provide the same protection for their portion of the work. If, in the opinion of the City, any work or material was damaged or injured by reason of failure on the part of the Contractor, or any of his subcontractors, so to protect his work, or otherwise damaged by the negligence of the Contractor or any of his subcontractors or their agents or servants, or is otherwise defective, such materials shall be removed and replaced at the expense of the Contractor.

20.02 For projects involving asphalt paving, all work shall be temporarily suspended, upon direction of the City, when the Contractor can no longer properly pave exposed areas in accordance with the plans and specifications during inclement weather or during winter months.

ARTICLE 21. SUBLETTING

21.01 The Contractor is not to assign, transfer or sublet the Contract in whole or in part to any other person or persons without written permission from the City. The Contractor cannot abridge the terms of the Contract in any way without written permission of the City. The Contractor must keep the Contract in his name and control until all work is completed the City has issued a Notice of Project Acceptance for the Project. The Contractor shall likewise not assign any of the money payable under this Contract. Approval by the City of the subletting of any part of the work shall not, under any circumstances, relieve the Contractor or his Surety of any liabilities or obligations under the terms of the Contract Documents.

21.02 The Contractor shall be as fully responsible to the City for the acts and omissions of his subcontractors, and of the persons either directly or indirectly employed by them, as he is for the acts and omissions of persons directly employed by him. Should any subcontractor violate any of the terms of these specifications, the City may, at its option, require the Contractor to end and terminate such subcontract.

21.03 The Contractor shall cause appropriate provisions to be inserted in all subcontracts relative to the work to bind subcontractors to the Contractor by the terms of the Contract and the General Conditions and other provisions of the Contract Documents. This language is to be applicable insofar as necessary to the work and is to give the Contractor the same power over as regards terminating any subcontract as the City may exercise over the Contractor under any provisions of the Contract Documents.

21.04 Nothing contained in this Contract shall create any contractual relation between the City and any subcontractor.

ARTICLE 22. SUBSTITUTE BOND

22.01 If, at any time, the Contractor's Surety or Sureties, or the carriers of other insurance herein specified to be written, become insolvent or, in a reasonable judgment of the City, become unsafe or unsound then, upon five days written notice from the City to the Contractor, the Contractor shall substitute such Performance and Labor and Material Bond or insurance with such other Surety or carrier in such form as shall be acceptable to the City. Any additional premium caused by such substitution shall be paid for by the Contractor. No further payments will be deemed due nor will be made until the new Surety or Sureties have furnished such an acceptable bond to the City.

ARTICLE 23. RIGHT TO WITHHOLD PAYMENTS

23.01 The City may withhold from the Contractor so much of any approved payments due as may in the judgment of the City be necessary to:

1. Assure the payment of any lien, stop notice or claim, filed with the City for work, labor, or materials done, performed or delivered and used in the prosecution of the work herein provided for (whether in strictly legal form or otherwise)
2. Protect the City from loss due to defective work not remedied or through any improper or defective machinery, implements or appliances used by the Contractor or for failure of the Contractor to fully comply with any requirements of the Contract
3. Protect the City from loss due to injury to persons or damage to work or property of other contractors, subcontractors or others caused by the act' or neglect of the Contactor or any subcontractors.

23.02 The City shall have the right, as agent for the Contractor, to apply any amounts so withheld in such manner as the City may deem proper to satisfy such claims or to secure such protection. Such applications of such money shall be deemed payments to the account of the Contractor.

23.02 Notwithstanding the above, the Contractor, in conformance with Section 49-41a of the Connecticut General Statutes, as revised, shall, within 30 consecutive calendar days after any given Contract payment to the Contractor by the City, pay any amounts due any subcontractor, whether for labor performed or materials furnished.

ARTICLE 24. PAYMENTS BY CONTRACTOR

24.01 The Contractor, in conformance with Section 49-41a of the Connecticut General Statutes, as revised, shall, within 30 consecutive calendar days after any given Contract payment to the Contractor by the City, pay any amounts due any subcontractor, whether for labor performed or materials.

ARTICLE 25. NOTICE OF WARNING

25.01 If the Contractor shall fail to make prompt payment to persons supplying labor or materials for the work; or refuse or fail to supply enough properly skilled workmen or proper materials; or refuse or fail to prosecute the work or any part thereof in accordance with the Contract Documents or with such diligence as will insure its completion within the period herein specified (or any duly authorized extension thereof); or fail to complete the work within said period; or refuse to regard laws ordinances, codes or instructions of the City then the City shall forward A Notice of Warning to the Contractor by registered mail at the address given in the Contract. In the event the Contractor fails to comply with said Notice of Warning within five (5) consecutive calendar days from receipt thereof, the City shall have the right to terminate the Contract.

ARTICLE 26. PROGRESS MEETINGS

26.01 Progress meetings will be held weekly at locations, dates and times selected by the City for the purpose of reviewing, scheduling and coordinating the Project's progress as well as other matters.

ARTICLE 27. PERMITS

27.01 The Contractor shall keep himself fully informed of all existing and current Municipal, State or Federal

ordinances, regulations or laws in any way limiting or controlling the operations or actions of those engaged in the work or affecting the materials supplied to or by them. The Contractor shall at all times observe and comply with all such valid and binding ordinances, laws or regulations. The Contractor shall protect and indemnify the City and its representatives against any claims arising from, or based upon, any violation of the same.

ARTICLE 28. RIGHT TO USE THE WORK

28.01 The City may enter upon the use of the whole or of any portion of the work, which may be in condition to use, at any time before its issuance of a Notice of Project Acceptance by the City. Such use shall not constitute, or be evidence of, acceptance by the City or by the Project Engineer of the whole or any part of the material furnished or work performed under the Contract.

ARTICLE 29. PROVISIONS REQUIRED BY LAW

29.01 Each and every provision of law and clause required to be inserted in this Contract shall be deemed to be inserted herein and the Contract shall be read and enforced as though it were included herein. If, through mistake or otherwise, any such provision is not inserted, then, upon application of either party, the Contract shall forthwith be physically amended to make such insertion.

29.02 If this Contract contains any unlawful provisions not an essential part of the general structure of the Contract, and which shall not appear to have been a controlling or material inducement in the making thereof, the same shall be deemed stricken from the Contract without affecting the binding force of the remainder.

ARTICLE 30. WAIVER

30.01 Neither the inspection by the City or Project Engineer or by any of their employees; nor any order, measurement or certificate by the Project Engineer; nor any order by the City for the payment of any money; nor any payment for or acceptance of the whole or any of the work by the Project Engineer for the City; nor any extension of time; nor any possession taken by the City or its employees shall operate as a waiver of any provision of this Contract or of any power herein reserved to the City. Nor shall such action waive any right to damages herein provided. Nor shall any waiver of any breach of the Contract constitute a waiver of any other or subsequent breach. Any remedy provided in this Contract shall be construed as cumulative - i.e. in addition to each and every other remedy herein provided.

ARTICLE 31. USE OF PREMISES AND REMOVAL OF DEBRIS

31.01 The Contractor expressly undertakes at his/her own expense:

1. To take every precaution against injuries to persons or damage to property.
2. To store apparatus, materials, supplies and equipment in such orderly fashion at the site of the work as will not unduly interfere with the progress of the work or the work of any other contractor.
3. To place upon the work or any portion thereof only such loads as are consistent with the safety of that portion of the work.
4. To frequently clean up all refuse, rubbish, scrap materials and debris caused by the Contractor's operations to the end that at all times the site of the work shall present a neat, orderly and work manlike appearance.
5. To remove all surplus material; falsework; temporary structures including foundations thereof; plant of any description and debris of any nature resulting from the Contractor's operations before Final Completion.
6. To put the site in a neat orderly condition, to remove all clean-up materials, to remove such materials from the construction site, and to deposit them in a refuse disposal site at his/her expense.
7. To effect all cutting, fitting or patching of work required to make the same conform to the Drawings and Specifications and, except with the consent of the City, not to cut or otherwise alter the work of any other contractor.

ARTICLE 32. RIGHT-OF-WAY AND SUSPENSION OF WORK

32.01 Land and rights-of-way for the purposes of this Contract will be furnished by the City to the extent shown on the Drawings. The City will use diligence in acquiring said land and rights-of-way as speedily as possible. However, it is possible that not all land and rights-of-way will be obtained as herein contemplated before construction

commences. In such case the Contractor shall begin the work upon such land and rights of-way as the City may have previously acquired. No claim for damages whatsoever will be allowed by reasons of the delay in obtaining the remaining lands and/or rights-of-way. Should the City be prevented or enjoined from proceeding with the work, or from authorizing its prosecution, either before or after the commencement, by reason of litigation or by reason of its inability to procure any lands or rights-of-way for the said work, the Contractor shall not be entitled to withdraw from the Contract because of these occurrences. In the event of any of the above occurrences, the time for completion of the work may be extended in the manner provided elsewhere in the Contract Documents.

ARTICLE 33. CONSTRUCTION EQUIPMENT AND MACHINERY

33.01 The Contractor shall furnish and maintain, at its own cost and risk, all tools, apparatus and appliances, hoists and/or cranes and power for same, scaffolding, runways, ladders, temporary supports and bracing and all other similar work or material necessary to insure speed, convenience and safety in the execution of its Contract. All such items shall be subject to approval of the City, upon the Project Engineer's recommendation, as to general stability, type and location, but the responsibility for proper design, strength and safety shall remain with the Contractor. All such items shall comply with OSHA regulations and all other applicable codes, statutes, rules and regulations.

33.02 The Contractor shall provide all drains, drainage, ditches and pumping apparatus (including power and attendance for same) that may be necessary to keep all excavations and sub-grade work free from water.

33.03 All machines, equipment, trucks and vehicles used in the prosecution of the work, or in connection therewith, shall be in proper working condition at all times. Only gasoline, electric or diesel engines shall be used for the power in operating equipment.

33.04 The Contractor shall be responsible for curtailing noise, smoke, fumes or other nuisances resulting from the operations. The. Contractor shall, upon written notification from the City or Project Engineer, make any repairs, replacements, adjustments or additions and furnish mufflers when necessary to' fulfill requirements. No oil tanks for fueling equipment shall be stored less than one hundred (100) feet from any watercourse.

33.05 All costs involved in complying with the stipulations outlined shall be included in the various prices in the bid/proposal.

ARTICLE 34. CONTRACTOR'S GENERAL GUARANTEE/WARRANTY PERIOD

34.01 The Contractor's General Warranty Period shall commence on the date of issuance of a Notice of Project Acceptance by the City and during such time Contractor shall guarantee his work is free from faulty materials and workmanship.

34.02 Within the Contractor's General Warranty Period, any portion of the Work shall, in the opinion of the City, require repairing, replacing or rebuilding, the Contractor shall start such repairs within five (5) consecutive calendar days after receipt of notice from the City. If the Contractor shall fail to or neglect to start the repairs within five (5) consecutive calendar days, the City may employ such other person or persons as it may deem proper to make such repairs. The City will charge the Contractor the cost thereby incurred. Nothing herein provided shall limit the liability of the Contractor or Surety to the City for non-performance of the Contractor's obligations at any time.

34.03 The Payment and Performance Bonds, and Material Bond, if required, shall remain in full force and effect through the Contractor's General Warranty Period.

34.04 Deficiencies in the Work discovered after the date of the issuance of a Notice of Project Acceptance by the City shall be deemed General Warranty Work. Such deficiencies shall be corrected by Contractor under this Article.

34.05 The Contractor shall remedy any defects due to faulty materials or workmanship within thirty (30) consecutive calendar days of receiving notice thereof by the City. Should the Contractor fail to correct the deficiency within thirty (30) consecutive calendar days, the City may perform the corrective work and Contractor shall be responsible for all reasonable costs incurred by City in performing such correction.

ARTICLE 35. PROCEDURE IN CONSTRUCTION

35.01 The Contractor shall start work and carry it on at such point or points and in such order of precedence and at times and seasons as may be determined by the City. The Contractor shall complete the various portions of the work in accordance with the schedule approved by the City.

35.02 A complete organization, complement of equipment and ample materials shall be on hand before actual work commences. The Contractor shall so arrange his/her organization, plant, equipment and materials so that construction operations will be carried on continuously. The Contractor will not be permitted to reduce the force of workers or remove any equipment from the work if such reduction or removal impairs the progress of the work.

35.03 In the event that the City awards more than one contract to the Contractor, the Contractor shall be required to prosecute the work on each contract simultaneously. The Contractor will be required to maintain a separate and independent organization and staff, labor forces and machinery on each contract in order to complete the work within the time set forth for the respective contracts.

ARTICLE 36. APPRENTICES

36.01 Apprentices shall be permitted to work only under a bonafide apprenticeship program registered either with the State Apprenticeship Council or with the Bureau of Apprenticeship, United States Department of Labor.

ARTICLE 37. CONTROL OF WORK

37.01 The Contractor shall abide by all orders, directions and requirements of the Project Engineer in the performance of the work.

37.02 In the event the Contractor is not personally present at the project site, he/she shall have a superintendent present at the site that possesses more than adequate communication skills. The superintendent must have proper knowledge of all applicable project requirements and conditions and must have authority to fully represent the Contractor with power to act and to be the recipient of orders and to obey all the instructions of the Project Engineer and/or the City. If proper provision for the carrying out of this stipulation is not made, then the Contractor shall be held responsible for the execution of such orders and instructions which the Project Engineer and/or City may deem necessary to issue to any employee regarding the work. The City or Project Engineer may order the work stopped until a duly authorized representative of the Contractor appears and receives instructions. No claims for damages or for an extension time in which to complete the work because of such delay will be allowed the Contractor.

37.03 In all cases, the Project Engineer shall determine classifications, quantities, quality, acceptability and fitness of the several kinds of work that are to be paid for under the Contract. The Project Engineer and/or City shall interpret the Plans and Specifications and any extra work orders and shall determine all questions in relation to said work and to the construction thereof.

37.04 The Contractor shall not employ any plant, equipment, material, methods or workers to which the City objects. The Contractor shall not remove any plant, materials, equipment or other facilities from the site of the work without the City's permission.

ARTICLE 38. CITY'S CONTROL NOT LIMITED

38.01 The enumeration in this Contract of particular instances in which the opinion, judgment, discretion or determination of the City shall control, and in which work shall be performed to the City's satisfaction and approval or inspection, shall not imply that only matters similar to those enumerated shall be so governed. Without exception all the work shall be so governed and performed.

ARTICLE 39. AUTHORITY AND DUTIES OF INSPECTORS

39.01 Inspectors shall be authorized to inspect all work done and all materials furnished. Such inspection may extend to all parts of the work and to the preparation or manufacture of the materials to be used. In the case of any dispute

arising between the Contractor and an Inspector as to materials furnished, or as to the manner of performing the work, the Inspector shall have the authority to reject material or to suspend the work until the question at issue can be referred to, and decided by, the City.

39.02 The Inspector shall not be authorized to revoke, enlarge, relax or release any requirements of these Specifications nor to approve or accept any of the provisions of the Contract Documents. The Inspector shall in no case act as a foreman or perform other duties for the Contractor. The Inspector shall not interfere with the management of the work by the Contractor. Any advice, which the Inspector may give the Contractor, shall not be construed as binding the City or the Project Engineer in any way. Such advice will not release the Contractor from the fulfillment of the terms of the Contract.

ARTICLE 40. INSPECTION AND CORRECTION OF WORK

40.01 All material furnished and work done will be inspected by the Project Engineer. The Project Engineer shall condemn any work or materials not in accordance with the Contract Documents. All condemned work and materials shall be removed and other work and materials furnished in accordance therewith. All materials rejected by the Project Engineer as being unfit for the particular clause in the Specifications to which they refer shall be removed from the site. Removal shall be within twenty-four (24) hours or shorter if the Project Engineer so directs. Should the Contractor refuse to remove the work and materials as ordered, then the Project Engineer may stop the Contractor from proceeding with the work. The City may supply workers and materials to remove the condemned work and materials at the expense of the Contractor.

40.02 Failure on the part of the Project Engineer, or any authorized Inspectors, to detect inferior work or materials, and to condemn the same, shall not be construed to imply an acceptance of such work or materials. Such failure shall not be construed as barring the City, at any subsequent time, from the recovery of such sum of money from the Contractor which may be required to construct or to build anew all portions of the work in which fraud was practiced, improper work executed or improper material furnished and built into the work. The Contractor shall furnish all necessary facilities should it be desirable at any time to make an examination of the work already completed.

40.03 If any work is found defective in any respect, the expense of the examination must be borne by the Contractor. If all work is found satisfactory, the expense of the examination will be paid for in the manner provided for elsewhere in the Contract Documents. If all work is found satisfactory, the expense of the examination will be paid for in the manner provided elsewhere in the Contract Documents.

40.04 If, in the opinion of the City, it is undesirable to reconstruct or correct any portion of the work injured or not performed in accordance with the Contract Documents, the Contractor's compensation hereunder shall be reduced by such amount as may be equitable under all circumstances.

ARTICLE 41. CONTRACTOR'S OBLIGATIONS

41.01 The Contractor shall and will, in good workmanlike manner, do and perform all work and furnish all supplies and material, machinery, equipment, facilities and means, except as herein otherwise expressly specified, necessary or proper to perform and complete all work required by this Contract. All to be accomplished within the time specified; in accordance with the provisions of this Contract and Specifications; in accordance with the Plans and Drawings pertaining to this Contract; in accordance with any and all supplemental Plans and Specifications and in accordance with the directions of the City as given from time to time during the progress of the work. The Contractor shall furnish, erect, maintain and remove such construction plant and such temporary work as may be required. The Contractor alone shall be responsible for the safety, efficiency and adequacy of the plant, appliances and methods. The Contractor shall be responsible for any damage, which may result from their failure or from their improper construction, maintenance or operation. The Contractor shall observe, comply with and be subject to all terms, conditions, requirements and limitations of the Contract and the Specifications. The Contractor shall do, carry on and complete the entire work to the satisfaction of the City.

41.02 The Contractor shall be solely responsible for all the work and shall provide all precautionary measures necessary for preventing injury to persons or damage to property. All injury or damage, of whatever nature, resulting from the work, or resulting to persons, from whatever cause, shall be the responsibility of, and shall be borne and sustained by, the Contractor. The Contractor shall hold the City and Project Engineer, or their agents, harmless and shall defend and indemnify the City and Project Engineer, or their agents, against damages, or claims for

damages, due to injury to .persons or to property arising out of the execution of work and for damages to material furnished for the work; for infringement of inventions, patents and patent rights used in doing the work; for damages arising out of the use of any improper material, equipment or labor used in the work and for any act of omission by any subcontractors therein. The Contractor shall bear all losses including, but not limited to, losses sustained on account of the character, quality or quantity of any part or all of the work, or because the nature of the land in or on which the work is done being different from what may have been estimated or indicated, or on account of the weather, elements or other causes, except for acts beyond the reasonable control of the Contractor.

ARTICLE 42. TOILET ACCOMMODATIONS AND DRINKING WATER

42.01 The Contractor shall provide necessary sanitary toilet accommodations and drinking water for the workers. Separate facilities shall be provided for female workers.

ARTICLE 43. SAFETY AND HEALTH REGULATIONS

43.01 These documents, and the joint and several phase of construction hereby contemplated are to be governed at all times by applicable provisions of the Federal law(s), including, but not limited to, the latest amendments of the following:

1. Williams-Steiger Occupational Safety and Health Act of 1970, Public Law 91-956.
2. Part 1910 - Occupational Safety and Health Standards; Chapter XVII of Title 29, Code of Federal Regulations.
3. Part 1926 - Safety and Health Regulations for Construction, Chapter XVII of Title 29, Code of Federal Regulations.

43.02 This project is subject to all of the Safety and Health Regulations (see 29 CFR 1926m as amended) as promulgated by the U. S. Department of Labor on June 24, 1974. The Contractor shall thoroughly familiarize him/herself with the requirements of these regulations.

ARTICLE 44. OWNERSHIP OF DRAWINGS AND SPECIFICATIONS

44.01 Subsequent to award of the contract, with the exception of the Contractor's executed set, all drawings and specifications are the property of the City. The City shall furnish one (1) paper and one electronic set, in PDF Format, of the construction drawings and specifications to the Contractor without charge. No additional sets will be furnished ~~ined~~ by the City. Such drawings and specifications are not to be used in other work.

ARTICLE 45. RESIDENTS' PREFERENCE IN WORK ON OTHER PUBLIC FACILITIES

45.01 Except to the extent prohibited by Federal or State statute, the Contractor shall comply with the provisions of Section 31-52a of the General Statutes of the State of Connecticut, Revision of 1967, a part of which is quoted as follows:

Section 2(b) each contract for any such project covered by this section under the supervision of the State or any of its agents shall contain the following provision:

"In the employment of mechanics, laborers or workmen to perform the work specified herein, preference shall be given to residents of the State who are and, continuously for at least six months prior to the date hereof, have been residents of the State, and if no such person is available, then to residents of other states."

ARTICLE 46. LISTING OF EMPLOYMENT OPENING

46.01 This Contract is executed subject to the Governor's Executive Orders No. 3 and No. 17, which are hereby made a part of this agreement. The Governor's Executive Order No, 17 requires, inter alia, that all contractors and subcontractors shall list all employment openings with the office of the Connecticut State Employment Service in the area in which the work is to be performed or where the services are to be rendered. Failure of the Contractor to conform to the requirements of the Governor's Executive Orders No. 3 and No. 17, and any orders, rules, or regulations issued pursuant thereto, shall be a basis for termination of this agreement by the City.

ARTICLE 47. SERVICE OF PROCESS

47.01 The Contractor, if not a resident of the State of Connecticut, or, in the case of a partnership, the partners, if not residents, hereby appoint(s) the Secretary of State of the State of Connecticut, and successors in office, agent for service of process. Such service, as arising out of, or because of, this Contract. Such appointment shall in effect throughout the life of this Contract and for a period of six (6) years thereafter.

ARTICLE 48. CITY OF WATERBURY ORDINANCE CHAPTER 34

48.01 For projects subject to the City's GOOD JOBS ORDINANCE (Code of Ordinances Chapter 34), the provisions thereof are in addition to any requirements of these General Conditions, and to any requirements of all funding sources for the Project, but only to the extent permitted by federal and state law.

ARTICLE 49. WAGE RATES

49.01 The wages paid on an hourly basis to any mechanic, laborer or workman employed upon the work herein, contracted to be done shall be at a rate equal to the rate customary or prevailing for the same work in the same trade or occupation in the City of Waterbury. The amount of payment or contribution paid or payable on behalf of each such employee to any employee welfare fund (as defined in Section 31-53 of the Connecticut General Statutes) shall also be at a rate equal to the rate customary or prevailing for the same work in the same trade or occupation in the City of Waterbury. If the Contractor is not obligated by agreement to make such payment or contribution on behalf of such employees to any such welfare fund, the Contractor shall pay to each employee the amount of payment of contribution for his classification on each payday as part of his wages.

49.02 For Prevailing Wage Rate projects, the Contractor shall furnish to the Project Engineer certified copies of payrolls showing the names of its employees working on the Project, the specific days and hours and number of hours that each of them has spent in doing so, and the amount paid to each person for said work.

ARTICLE 50. SCHEDULE AND POSTING OF MINIMUM WAGE RATES

50.01 Where applicable, the Contractor, and every subcontractor, shall post a legible copy of the Minimum Wage Rates and Classifications included in the Contract Documents. This posting shall be in a prominent and accessible place at the site of the work (See ARTICLE 49). The schedule shall show all determined minimum wage rates for the various classes of laborers and mechanics to be engaged to work on the project. The schedule shall also show all deductions, if any, required by law to be made from wages actually earned by the laborers and mechanics so engaged.

50.02 The rates established by each schedule are the minimum and all employees shall be paid no less than the established rate for each trade or occupation. In the case of a conflict between schedules in anyone trade or occupation, the higher rate listed shall control and such higher rate shall be considered to be the minimum.

50.03 State: Where applicable, the minimum rates of wages and schedule of supplements to be provided for the various trades shall be in accordance with the Prevailing Wage rate Schedule included herein. The rate of wages and schedule of supplements for any trade not appearing or mentioned in this schedule shall be in accordance with the prevailing rates established for that particular trade by the Connecticut Department of Labor or by the Comptroller or other analogous officer of the City of Waterbury. Minimum wages required to be paid shall include supplements for hospital, surgical, medical or other benefits as determined by all applicable section of the General Statutes of the State of Connecticut. The Contractor shall file a Wage Certification Form with the Labor Department of the State of Connecticut prior to beginning work on the site.

50.04 If for any reason and at any time, the Federal Government, the State of Connecticut, or the City of Waterbury, shall in any way supplement, change or amend the Prevailing Wage Rates Schedule, then the Contractor or subcontractor shall follow such Schedule as supplemented, changed or amended. In no case shall the Contractor or subcontractor be entitled to any additions, compensations or extras because of any supplement, change, amendment or predetermination of the Prevailing Wage Rate Schedule.

50.05 Federal Wage Rates, where applicable, shall be applied in any case where they exceed the State of Connecticut Minimum Wage rates or in any case where a rate has not been established by the State.

ARTICLE 51. COMPUTATION OF WAGES AND OVERTIME COMPENSATION

51.01 The Contractor and each subcontractor shall comply with all applicable Federal, State and local laws or ordinances with respect to the hours worked by laborers and mechanics engaged in work on the project. The Contractor and all subcontractors shall also comply with all applicable Federal, State and local ordinances with respect to compensation for overtime hours worked by laborers and mechanics engaged in work on the project.

ARTICLE 52. WAGE UNDERPAYMENTS AND ADJUSTMENTS

52.01 In addition to any applicable Federal or State regulations, the City may, in the case of underpayment of wages to any worker on the project under this Contract by the Contractor or by any subcontractor, withhold an amount from payments due the Contractor. Said amount to be sufficient to pay such worker the difference between the wages required to be paid the worker under this Contract and the amount actually paid the worker for the total number of hours worked. The City will disburse such amount so withheld by it for, and on behalf of, the Contractor to the employee to whom the amount is due. Such monies withheld pursuant to this article will be in addition to percentages to be retained pursuant to other provisions of the Contract.

ARTICLE 53. CONFORMANCE OF WORK

53.01 The work, during its progress and at its completion, shall conform to the work as shown on the drawings and to the directions given by the Project Engineer from time to time. The work shall be subject to such modifications or additions as the Project Engineer may deem necessary during the execution of the work. In no case will any work be paid for which is performed in excess of such requirements. The work shall also be accomplished in accordance with the Specifications.

ARTICLE 54. DIMENSIONS AND SCHEDULES

54.01 The Contractor will be required to check all dimensions and quantities shown on the drawings or schedules given to him by the Project Engineer. The Contractor shall notify the Project Engineer of all errors therein which he may discover by examining and checking the same. The Contractor shall not take advantage of any error or omission in these specifications, drawings and schedules. The Project Engineer will furnish all instructions should such error or omission be discovered and the Contractor shall carry out such instructions as if originally specified.

ARTICLE 55. PROTECTION FROM STORM

55.01 Should storm warnings be issued, the Contractor shall take every practicable precaution to minimize danger to persons, to the work and to adjacent property. These precautions shall include closing all openings; removing all loose materials, tools and/or equipment from exposed locations; and removing or securing scaffolding and other temporary work.

55.02 The Contractor shall provide measures to prevent stormwater runoff from entering excavation areas.

ARTICLE 56. PROTECTION OF WORK AND MATERIALS

56.01 The Contractor shall assume full responsibility for the protection of the work and materials during the progress of construction, and until issuance of a Notice of Project Acceptance by the City, against loss or damage by any cause or agency. The Contractor shall, at his own expense, provide efficient means for such protection.

ARTICLE 57. FURTHER SAFEGUARDS

57.01 In case the City or the Project Engineer shall at any time be dissatisfied with the means provided by the Contractor for any aforesaid protection of the work or of any other properties, the City or the Project Engineer may order additional measures and precautions for that purpose. The Contractor, at his own expense, shall immediately comply with such orders and carry them out.

ARTICLE 58. FIRST AID TO INJURED

58.01 The Contractor shall keep on site, ready for immediate use, all articles necessary for giving first aid to injured employees. He shall also provide arrangements for the immediate removal and hospital treatment of any injured employee who may require such treatment.

ARTICLE 59. CONFORMANCE WITH DIRECTIONS

59.01 The Project Engineer may make alterations in the lines, grades, forms, dimensions or materials to be used in the project, or any part thereof, either before or after the commencement of construction. If such alterations diminish the quantity included in any item of work to be done and paid for at a unit price, the Contractor shall have no claim for damages or for anticipated profits on the work thus dispensed with. If the changes increase the quantity included in any such item, such increase shall be paid for at the stipulated unit price.

ARTICLE 60. COMPETENT HELP TO BE EMPLOYED

60.1 The Contractor shall employ an experienced foreman, craftsmen and other workmen competent in the work in which they are to be engaged. All work shall be accomplished by able, skilled and competent personnel. If any person employed on the work by the Contractor shall appear to be incompetent or unreliable in any way, he shall be discharged immediately upon the request of the Project Engineer and shall not be again employed upon the work.

ARTICLE 61. STREETS AND SIDEWALKS TO BE KEPT OPEN

61.01 The Contractor shall keep the street and sidewalks in which he may be working open at all times to pedestrian and vehicular traffic. If, in the opinion of the City or the Project Engineer, the interest of abutters and the public requires it, the Contractor shall bridge or construct plank crossings over trenches at street crossings, roads or private ways. The Contractor shall conduct his work for this project in such manner as the City or the Project Engineer may direct from time to time. No sidewalk shall be obstructed where it is possible to avoid it. No additional payment shall be made to the Contractor for such work.

61.02 The Contractor shall provide all necessary fire crossings at principal intersections or ways usually traveled by fire apparatus. The Contractor shall make provision for the passage of fire apparatus to the work area, including along the line of pipeline installations.

61.03 All work shall be conducted in such a manner as to create minimum interference with existing businesses and commercial establishments. Such establishments shall be allowed to conduct business at all times during the construction.

61.04 The Contractor shall be responsible for taking all steps necessary to minimize dust emanating from the project and for keeping the streets free of the accumulation of sand and other similar materials.

ARTICLE 62. LIGHTS, BARRIERS, FENCES, WATCHMEN AND INDEMNITY

62.01 The Contractor shall put up and maintain such barriers, fences, lighting, and warning lights, danger warning signals and signs as will prevent accidents during the construction. The Contractor will protect the work and will insure the safety of the personnel and of the public at all times and places. The Contractor shall defend, indemnify and save harmless the City its agents in every respect from any injury or damage whatsoever caused by any act, omission or neglect of the Contractor or his subcontractors, or their servants or agents. Such indemnification shall also include any claims arising out of failure to erect and maintain sufficient railing or fencing as required by Section 13a-111 of the Connecticut General Statutes. The fact that the City may retain control of the premises, or that the City, or its agents, may take action to erect or maintain railings or fencing shall not relieve the Contractor's obligations hereunder.

62.02 The Contractor shall furnish, maintain and use all necessary safety devices; follow all such safety practices in the prosecution of the work and shall adopt, follow and maintain such additional safety measures as, in the opinion of the Project Engineer, are conducive to safe operation by the Contractor. The Contractor shall cause his subcontractor(s) to also adopt, follow and maintain these measures. All of this shall be done at the Contractor's or subcontractor's own expense. The City shall have the right to order any or all work suspended where, in the

opinion of the City, such work is not being carried on in a safe and proper manner or where persons or property are not being properly protected or safeguarded. Such work shall not be resumed until the City's requirements have been met and the City or Project Engineer has directed that work be resumed. Any work so suspended shall be at the Contractor's expense.

62.03 In addition to the above, when as is necessary or when required by the City and/or the Project Engineer, the Contractor shall post signs and shall employ watchmen or flagmen for the direction of the traffic at the site and for excluding unauthorized persons from the site at all times. The Contractor will not be paid additional compensation for this work.

62.04 At all times the Contractor shall be responsible for excluding all persons from land within easement areas and all persons not directly connected with the work or authorized by the City and/or the Project Engineer to be within the project limits.

ARTICLE 63. WORK OUTSIDE REGULAR HOURS

63.01 Night work or work on Saturdays, Sundays or legal holidays requiring the presence of the City, Project Engineer or an Inspector will not be permissible except in the case of emergency and then only upon approval of the Project Engineer. Should it be desired or required for by the City or Project Engineer to operate an organization for continuous night work, the lighting, safety and other facilities that are deemed necessary for performing such night work shall be provided by the Contractor. For night work on Saturdays, Sundays or legal holidays, if any be performed, the Contractor will receive no extra payment. Compensation for such work shall be considered as having been included in the prices stipulated for the appropriate items of work as listed in the bid/proposal.

ARTICLE 64. BUS LINE INTERFERENCE

64.01 Whenever it may be necessary to interfere with any bus lines, notice shall be given to the corporation or agency owning the same. A reasonable amount of time shall be given to said organization in order to rearrange their schedule(s) as may be necessary.

ARTICLE 65. COLD WEATHER WORK

65.01 The Project Engineer will determine when low temperature conditions are unfavorable for work and may order the work, or any portions of it, suspended whenever, in his opinion, the conditions are not such as will insure first class work.

65.02 All methods and materials used in the performance and for the protection of the work in cold weather shall be subject to the approval of the Project Engineer. The Contractor shall take the necessary precautions to protect the work from damage and to remove ice and frost from materials. The removal shall include all necessary heating and the additional removal of any resultant water. The Contractor shall also supply any required sand and/or coarse aggregate required to prevent slipping on ice.

65.03 Except for specific work for which the City has issued a Certificate of Limited Acceptance of the Work, the Contractor shall be responsible for maintaining the project roadways, sidewalks, ramps, driveway aprons and asphalt pathways from the time of contract signing until the issuance of a Notice of Project Acceptance by the City. This responsibility will include snow and ice removal, sanding and mechanical sweeping, and patching with materials approved by the Project Engineer for all roadways, sidewalks, ramps, driveway aprons and asphalt pathways, etc. within the project limits.

65.04 The Contractor shall not continue road excavation after bituminous concrete plants have shut down for the winter. At that time, the Contractor shall request a "winter shutdown". The Contractor shall receive no extra payment for any labor, apparatus, tools or materials necessary to comply with the above requirements, but compensation shall be construed items of work as listed in the bid/proposal form.

ARTICLE 66. BLASTING AND EXPLOSIVES

66.01 No blasting shall be allowed without the Contractor's securing of a permit and permission from the office of the Waterbury Fire Marshall. The Marshall's office is located at 185 South Main Street, Garden Level, (1 Jefferson Square), Waterbury, CT 06702 Phone: (203) 597-3452. The Marshall's office must be advised between 7:00 AM

and 10:30 AM of each day's blasting schedule.

66.02 Explosives for blasting shall be stored, handled and used in accordance with the laws, ordinances and regulations of the State of Connecticut; with all local regulations and with such other additional regulations as the City Representative may require. Blasting shall be conducted so as not to endanger persons or property. The Contractor shall be responsible for, and shall make good any damages of whatever nature caused by blasting or accidental explosions.

66.03 The Contractor shall also adhere to any additional conditions imposed by the Fire Marshall's office. Additionally, the Contractor shall have a pre-blast survey conducted of the adjacent area(s) at no cost to the City.

66.04 Steel or rubber matting shall be used at all blast sites where required by the Bureau of Fire Prevention. Any blast or shot involving more than 99 pounds of explosives must be monitored by the use of seismographs. All seismographs are at the expense of the Contractor. Wire and debris must be cleared from all areas.

66.05 The Contractor shall notify each utility with facilities in proximity to the site of such blasting operations, and any other individuals and entities that may be affected thereby of the Contractor's intention to use explosives; and such notice shall be given sufficiently in advance of any blasting to enable such affected parties to take steps to prevent such blasting from injuring persons or property. Such notice shall not relieve the Contractor of responsibility for damage resulting from its blasting operations.

66.06 Where blasting is required subsequent to commencement of construction, insurance, as required by the City's Risk Manager shall be obtained by the Contractor, and approved by the City's Risk Manager.

ARTICLE 67. TUNNELING

67.01 Tunneling will not be permitted without the express written consent of the City.

ARTICLE 68. RESERVED MATERIALS/EXCAVATED MATERIALS

68.01 Materials excavated from trenches and excavations and those used in the construction of the work shall be deposited in such a manner so that they not endanger persons or the work. Materials shall also be deposited in such a manner that free access may be had at any time to all hydrants and gates near the work. The materials shall be kept trimmed-up so to be of as little inconvenience as possible to public travel or to adjoining tenants. All excavated materials not approved for backfill and/or fill; all surplus material; all rock and all boulders resulting from excavations shall be removed and satisfactorily disposed of off the site by the Contractor at no additional cost to the City.

68.02 Any excavated material not used in the installation of contracted items shall be removed from the site and legally disposed of by the contractor.

ARTICLE 69. OBSTRUCTIONS AND CROSSOVERS

69.01 Whenever any trench or other excavation obstructs pedestrian and/or vehicular traffic in or to any public street, private driveway or property entrance or to private property, the Contractor shall employ such means as may be necessary to maintain pedestrian and vehicular traffic and access. The Contractor shall construct and maintain suitable plank crossings and bridges to carry essential traffic in or to the street, driveway or property in question as specified or as directed. These crossings shall be maintained for as long as it is not expedient to backfill the excavation or until such time as sufficient, supportive backfill may be placed. No additional payment will be made for this work.

69.02 Movement of construction equipment and all other vehicles and loads over and adjacent to any slotted drain pipe shall be done at the Contractor's risk. Any pipe or backfill which becomes damaged or disturbed through any cause shall be replaced or repaired as directed by the City at the expense of the Contractor and at no cost to the State. Suitable temporary crossovers consisting of steel plate or other materials approved by the City shall be employed for a minimum of 7 consecutive calendar days following concrete backfill operations in all areas where vehicular traffic must be maintained or until such time as the pipe installation will withstand loading without damage. All concrete surfaces shall receive a protective coating. End cap installation shall be as recommended by the manufacturer.

ARTICLE 70. DIRECTIONAL SIGNS AND LIGHTS

70.01 Suitable signs, lights and such required items to direct traffic shall be furnished and maintained by the Contractor. No additional payment shall be made for this work.

ARTICLE 71. MAINTENANCE OF WORKPLACE

71.01 The Contractor must keep streets and premises free from unnecessary obstructions, debris and all other materials. The City or Project Engineer may, at any time, order all equipment, materials and surplus from excavations to be removed from the work area. Debris and all other materials lying outside of the working area shall be promptly removed. Should the Contractor fail to remove such material within 24 hours of notice to remove, the City or Project Engineer may cause any or all of said materials to be removed by others. The cost of this removal shall be deducted from any monies, which may be, or may become, due the Contractor under the Contract. In special cases, the City or Project Engineer may cause such materials to be removed without prior notice.

ARTICLE 72. OPERATIONS AT SEVERAL POINTS

72.01 The Contractor may carry on the work simultaneously at more than on point only if, in the opinion of the City or Project Engineer, such action is acceptable and is necessary to insure completion of the work within the specified time.

72.02 The Contractor's Construction Progress Schedule shall be adjusted to provide for work being simultaneously conducted at more than one point (location) at the site or sites.

ARTICLE 73. INTERFERENCE WITH EXISTING STRUCTURES

73.01 Whenever it may be necessary to cross or to interfere with existing culverts, drains, sewers, water pipes or fixtures, guard rails, fences, gas pipes or fixtures or other structures needing special care, due notice shall be given to the City or Project Engineer. Work involving these items shall be done according to the City's or Project Engineer's directions. Whenever required, all objects shall be strengthened to meet any additional stress that the work herein specified may impose upon it. Any damages that may occur shall be thoroughly repaired. If so directed by the City or Project Engineer, the location of any existing work shall be changed to meet the requirements of the proposed work, if necessary, to leave all in good working order. The entire work shall be the responsibility of the Contractor and the work shall be done at no additional expense to the City.

73.02 The Contractor shall be responsible for repairing all broken or damaged mains or utilities, property markers, monitoring wells, and other existing structures to remain, or outside the Limit of Work, during the progress of the Work. The Contractor shall repair and shall be responsible for all damages to existing utilities and structures with no additional expense to the City. The Contractor shall contact the proper utility or authority to correct or make any changes due to utility or other obstructions during the prosecution of the work, but the entire responsibility and expense shall be with the Contractor.

73.03 All damaged items of work or items required to be removed and replaced due to construction shall be replaced or repaired by the Contractor to the complete satisfaction of the City and/or utility at no additional expense to the City.

ARTICLE 74. TURF, TOPSOIL AND OTHER REPLACEMENT ITEMS

74.01 Where the construction runs through cultivated or sodded lands, the Contractor shall stockpile the turf and topsoil separately and replace the same after the excavation is filled. The Contractor shall leave the land as nearly as possible in its original condition. Trees, fences, walls, walks and other items must not be damaged.

ARTICLE 75. MATERIALS

75.01 All materials furnished and used in the completed work shall be new, of best quality, workmanship, and design and shall be recognized as standard in good construction practices. Whenever a specification number or reference is given, the subsequent amendments (if any) shall be included. The standards set forth in the selection of

materials and supplies are intended to conform to those standards adopted by the City. Preference in manufacture shall be given to familiarize the Contractor with the requirements of the Project Engineer when the occasion or choice of materials or supplies so demands.

ARTICLE 76. DEFECTIVE MATERIALS

76.01 No materials shall be laid, installed or used which are known to be, or which may be found to be, in any way defective. Notice shall be given to the Project Engineer of any defective or imperfect material. Defective or unfit material found to have been laid, installed or used shall be removed and replaced by the Contractor with unobjectionable material. This removal and replacement shall be made without additional expense to the City.

ARTICLE 77. INSPECTION AND TESTING OF FURNISHED MATERIALS

77.01 Unless herein provided otherwise, all materials furnished by the Contractor are subject to thorough inspections and tests by the Project Engineer. Any materials condemned or rejected by the Project Engineer as not conforming to the specifications may be branded or otherwise marked. Branded or marked material shall be, on demand, at once removed by the Contractor to a satisfactory distance from the site. Removed materials shall not again be brought upon or near to the work.

ARTICLE 78. SAMPLES AND ORDERING LISTS

78.01 Unless herein provided otherwise, the Contractor shall submit samples of the various materials used on the contract as required by the specifications for testing purposes. All ordering lists shall be submitted by the Contractor to the Project Engineer for approval and must be approved before the ordering of the materials.

ARTICLE 79. SANITARY CONVENIENCES

79.01 Adequate sanitary conveniences, properly secluded from public observation, for the use of workmen on the premises shall be provided and maintained by the Contractor in accordance with the requirements of local and State health authorities. These conveniences shall be maintained in such manner and at such points as shall be approved and their use shall be strictly enforced. Sanitary waste shall be treated and disposed of in a manner satisfactory to, and as directed by, the City and/or the local and State health authorities. Under no circumstances shall sanitary waste be allowed to flow on the surface of the ground or in the work area.

79.02 The cost of sanitary conveniences and the maintenance of same will not be paid for separately, but compensation will be considered to be included in the prices stipulated for the items of work as listed in the bid/proposal form.

ARTICLE 80. FINISHING AND CLEANING UP

80.01 In completing any backfilling operation, the Contractor shall replace all surface material to the satisfaction of the City. The Contractor shall then immediately remove all surplus material, all tools, and other property belonging to him. The Contractor shall leave the entire street or surrounding area free and clean, in good order and at no additional expense to the City. Backfilling and removal of surplus materials shall follow closely upon the completion of the work. The Contractor shall exercise special care in keeping rights-of-way and private and public lands, upon which work is being performed, clean and free of debris at all times. The Contractor will remove tools and other property belonging to him when they are not being used.

80.02 In case the Contractor shall fail or neglect to promptly remove all surplus materials, tools and other incidentals after backfilling, or shall neglect to do required paving promptly, the City or Project Engineer may, after 24 hours notice, cause the work to be done and the cost thereof shall be deducted form any monies then or thereafter due the Contractor.

ARTICLE 81. RIGHTS OF ACCESS

81.01 Nothing herein contained or shown on the drawings shall be construed as giving the Contractor exclusive occupancy of the work area involved. The City or any other Contractor employed by the City, the various utility companies, contractors or sub-contractors employed by Federal, state or local government agencies involved in

the general project or upon public rights-of-way, may enter upon or cross the area of work or occupy portions of it as directed or permitted. When the territory of one contract is the convenient means of access to the other, each contractor shall arrange his work in such manner as to permit such access and to prevent unnecessary delay in the work as a whole. Said access rights shall also include all Federal and state agencies and their representatives that have an interest in said project.

ARTICLE 82. WORK BY OTHERS

82.01 The City reserves the right to do any other work which may connect with, or become a part of, or be adjacent to the work embraced by this Contract, at any time, by contract work or otherwise. The Contractor shall not interfere with, nor obstruct in any way, the work of such other persons as the City may employ. The Contractor shall execute his own work in such a manner as to aid in the execution of work by others as may be required. No excavations or backfilling will be permitted if other work by the City will be affected.

ARTICLE 83. WORK WITHIN THE LIMITS OF PRIVATE PROPERTY

83.01 Particular attention is hereby directed to the fact that some of the work included under this Contract may have to be done within the limits of properties that are publicly or privately owned. The City, where necessary has, or will have, secured the necessary easements to these properties for construction purposes. The Contractor will be permitted to utilize the areas of the City's easements, subject to all of the conditions and requirements as they may affect the Contractor's operations. The Contractor shall conduct his operations and activities in the performance of the work with all such conditions and requirements as may be imposed by the City or Project Engineer.

83.02 All means and rights of ingress and egress to the work areas and all other areas required for work space, in addition to the City's easements, shall be the entire responsibility of the Contractor, All costs in connection therewith shall be considered to be included in the prices stipulated for the appropriate items of work as listed in the bid/proposal form.

83.03 The Contractor shall neither use nor occupy public or private lands outside the limits of the City's easements and rights-of-way unless written permission from the owner of the public or private lands have first been obtained. Copies of the written agreements shall be submitted to the Project Engineer prior to entering upon such lands. The Contractor shall be responsible for cooperating with, and for coordinating the prosecution of, the work of this Contract with the public and private property owner. Any abuse to the lands of the public and private property owner shall be immediately corrected by the Contractor, at the Contractor's expense, to the complete satisfaction of the property owner. The Contractor shall take such precautionary measure, as required by the City, to prevent further nuisances, interference or inconvenience to abutting property owners.

83.04 It shall be the Contractor's full responsibility to be familiar with the limitations imposed upon the work of construction within the various properties of public or private ownership and rights-of-way by existing occupancy or use. The Contractor will be required to make every effort to fully and satisfactorily protect trees, shrubs, lawns, gardens, fences, walks, driveways, structures and all and any other appurtenances of the property owners.

83.05 The Contractor shall provide adequate access to all walks, driveways, yards or structures: shall protect all work by the erection or placement of safety guards or barriers, lights and such other incidentals; and where required, shall construct temporary plank crossings or timbers to permit full use of private facilities at all times. All of these actions are to be performed at no additional expense to the City. All other applicable provisions for control of work within the areas of public travel set forth elsewhere herein shall also apply to work within the limits of private ownership.

83.06 The Contractor shall cooperate with the public and private property owners and shall also contact the City and Project Engineer for additional information regarding the requested (or required) length of time needed as a notice to be given to the public or private property owner before the Contractor enters their property to start the construction. In some cases, a certain time to start the work and a certain limited length of time may be required to complete the work on public and private property owners. Furthermore, the contactor may be required to shutdown construction operations as necessary to prevent undo interference with the operation of private and public business within the project area.

83.07 Before proceeding with construction operations, the Contractor shall provide suitable and substantial gates or other approved forms of closing gap devices in every fence within the limits of the owner's easements through which the Contractor intends to move or pass equipment and materials. It is the responsibility of the Contractor to negotiate with the owner of each fence all of that owner's requirements, in addition to those specified above. It shall also be the responsibility of the Contractor to comply with all requirements as specified herein and as agreed to with the owner's in a manner satisfactory to the owner.

83.08 No separate payment will be made for the requirements specified under "WORK WITHIN THE LIMITS OF PRIVATE PROPERTY" and all cost in conjunction therewith shall be included in the prices stipulated for the appropriate items of work as listed in the bid/proposal form.

ARTICLE 84. LOADING

84.01 No part of the structures involved in this Contract shall be loaded during construction with a load greater than that calculated for the safety of the structure. Should any accidents or damage occur through any violation of this requirement, the Contractor will be held responsible. If necessary, the Contractor shall request, in writing, the allowable loading from the Project Engineer.

ARTICLE 85. COMPLETION OF WORK

85.01 In addition to the specified or described portions, all other work and all materials, equipment and labor of whatever description which are necessary or required to complete the work, or for carrying out the full intent of the drawings and specifications, as interpreted by the Project Engineer, shall be provided by the Contractor. Payment therefore shall be considered as having been included in the prices stipulated for the appropriate items of work as listed in the bid/proposal form.

ARTICLE 86. DUST AND SPILLAGE CONTROL

86.01 The Contractor shall exercise every precaution to prevent and to control dust arising out of all construction operations from becoming a nuisance. Water shall be provided and applied as required or as ordered by the Project Engineer for allaying dust conditions. Pavements adjoining excavations shall be kept swept and/or washed clean of excess excavated material wherever and whenever directed. Earth piles adjacent to excavations, earth stockpiles and surfaces of refilled excavations shall be kept moist at all times as directed. No extra payment will be made for providing the dust control measures and for conforming to the requirements specified above. Compensation therefor shall be considered included in the prices stipulated for the appropriate items of work as listed in the bid/proposal form.

86.02 The Contractor shall take appropriate measures to control the generation of dust from its activities. Water shall be provided and applied as required or as ordered by the Project Engineer for allaying dust conditions.

86.03 All vehicles utilized by the Contractor for delivery or removal of materials shall have appropriate covers to prevent spillage of material during transit.

ARTICLE 87. CARE OF THE WORK

87.01 The Contractor shall be responsible for all damages to persons or property that occur as a result of the Contractor's fault or negligence concerning the prosecution of the work. The Contractor shall also be responsible for the proper care and protection of all material delivered and of all work performed until the issuance of a Notice of Project Acceptance by the City, whether or not the same has been covered by partial payments authorized by the Project Engineer.

ARTICLE 88. EMERGENCY WORK

88.01 The Contractor shall file, with the City Engineer and the Project Engineer, if any, the name and telephone number of a person authorized by him who may be contacted regarding emergency work at the job site that may be required during non-working hours for reasons of public safety. This person shall be readily available and shall have full Authority to deal with any emergency that may occur.

ARTICLE 89. FIRE PREVENTION AND PROTECTION

89.01. All Federal laws (Occupational Safety and Health Act) and all state and municipal rules and regulations with respect to fire prevention, fire-resistant construction and fire protection shall be strictly adhered to by the Contractor. All work and facilities necessary therefore shall be provided and maintained by the Contractor in an approved manner.

89.02. All fire protection equipment (as per 89.01 above) shall be provided by the Contractor for the protection of the contract work including temporary work and adjacent property. Personnel experienced in the operation of the fire protection equipment and apparatus shall be available whenever work is in progress and at such other times as may be necessary for the safety of the public and of the work.

89.03. Open fires will not be permitted.

ARTICLE 90. PLANIMETER

90.01 For estimating quantities, where the computations of areas by analytic and geometric methods would be comparatively laborious, it is stipulated and agreed that the planimeter shall be considered an instrument of precision adapted to the measurement of such areas, as utilized by an engineer.

ARTICLE 91. SUPERINTENDENCE

91.01 During the entire duration of the project, the Contractor shall employ a competent superintendent in personal charge of the work. The superintendent shall be present during all phases of construction and shall have full authority to act for the Contractor. The superintendent shall be continued in this capacity full time for this project unless (1) the person ceases to be on the Contractor's payroll or (2) the person proves to be unacceptable to the City or Project Engineer. Instructions given to the superintendent and/or supervisory subordinates shall be considered as given to the Contractor. A chain-of-command listing shall be submitted by the Contractor to the City and Project Engineer and shall be adhered to in the temporary absence of the superintendent.

ARTICLE 92. CONTRACT ADMINISTRATION COSTS - OUTSIDE REGULAR HOURS

92.01 The working schedule shall be confined to a five (5) day week ending on Friday. The working day shall be any eight-hour period beginning no earlier than 7:00 AM and ending no later than 7:00 PM. Whenever the Contractor elects to perform work on Saturdays, Sundays or legal holidays observed by the City or to work in excess of the normal working hours stated above, the Contractor shall pay to the City the extra cost incurred by the City due to the increased cost of contract administration. Payment shall include all cost of inspection and administration for such Saturday, Sunday or legal holiday work or for work in excess of the normal working day, which the City is obligated to incur and for the extra expense involved in overtime work resulting from the performance of work on these days.

92.02 No work outside regular hours or overtime work shall be planned or executed without the approval of the City.

ARTICLE 93. DAILY REPORTS

93.01 The Contractor shall submit daily activity reports on an approved form for the duration of the project. The report shall indicate all personnel currently employed on the work, including each trade and every subcontractor; all equipment and whether that equipment was idle for the particular day; a general description of all work accomplished and any authorized extra work (time and material reports shall be submitted on separate forms).

ARTICLE 94. MATERIAL AND WORKMANSHIP

94.01 All materials and workmanship incorporated in the work covered by this Contract are to be of the highest grade of their respective kinds for the purpose intended. The Contractor shall furnish to the Project Engineer for approval the name of the manufacturer of machinery and mechanical or other equipment that the Contractor contemplates incorporating in the project together with their respective performance capacities and other pertinent information.

94.02 When required by the Specifications, or when called for by the City or Project Engineer, the Contractor shall furnish the required information for approval of all material that the Contractor contemplates incorporating in the work. Samples of material shall be submitted for approval to the Project Engineer when and as directed. Machinery, equipment and material installed or used without approval shall be at the risk of subsequent rejection.

ARTICLE 95. TEMPORARY WATER SUPPLY

95.01 In the event temporary water supply work is required, it shall be provided in accordance with the requirements of the Waterbury Water Bureau and all local and state health authorities. The Contractor shall provide and maintain facilities for an adequate supply of water suitable for use for construction purposes and for domestic use as required for the work of this Contract. The cost of all work, materials, equipment, appurtenances and accessories necessary for providing supplies of water at the site, including the cost of all water consumed, shall be borne by the Contractor.

95.02 Upon Substantial Completion to the work of this Contract, and before Final Completion of the Project, the Contractor shall remove all temporary piping and appurtenant work used for the temporary water supply.

ARTICLE 96. FITTING AND COORDINATION OF WORK

96.01 The Contractor shall be responsible for the proper fitting of all work and for the coordination of operations of all trades, subcontractors or material suppliers engaged in the work. The Contractor shall be prepared to guarantee to each of his subcontractors the dimensions for which they may require for the fitting of their work to all surrounding work. The Contractor shall do, or shall cause his agents to do, all cutting, fitting, adjusting and patching necessary to make the several parts of the work come together satisfactorily and properly and to fit the work to receive, or to be received by, the work of other contractors.

ARTICLE 97. ARCHEOLOGICAL FINDS

97.01 During the life of this Contract, in the event that any articles such as "charcoal", "bone", "shell", "cultural objects", "fire-cracked stones", "stone flaking material." or any other such related items of historical significance are discovered on the project, the Contractor is required to notify:

(1)The City
(2) Project Engineer or Inspector

ARTICLE 98. EXCAVATIONS NEAR UNDERGROUND UTILITIES

98.01 In conformance with Section 16-345 of the Regulations of the Department of Public Utility Control, the Contractor shall not start any excavation and/or blasting of rock activity without first having ascertained the location of all such utilities in the area. The Contractor shall notify the Public Utilities Regulatory Authority (PURA) "CALL BEFORE YOU DIG" (Toll Free 1- 800-922-4455) at least two (2) full days in advance (excluding Saturday, Sunday and legal holidays), but no more than thirty (30) days before starting any such work. Such notice shall include the name, address and telephone number of the persons/agency performing the work, the date, location and type of excavation.

98.02 The PURA should immediately transmit such information to the utility companies whose facilities may be affected. Utility companies receiving notice should mark-up the locations of their facilities on the work site. If they have no facilities in the area, they shall so inform the Contractor. If the Contractor does not receive any information or marked-up locations on the work sites, the Contractor shall contact PURA again to verify that the utility companies have responded to the initial call. Under no circumstances will the Contractor be allowed to start any excavation and/or blasting work prior to obtaining all necessary information regarding the location of underground utilities at the site. It is the Contractor's responsibility to have all utilities marked on the work sites prior to starting the work.

ARTICLE 99. WATER QUALITY OF WELLS

99.01 The Contractor shall perform all tests required by the State Health Department on all water supply wells and reservoirs where directed by the City or Project Engineer before and after construction. All labor, materials and testing shall be paid by the Contractor at no cost to the City.

ARTICLE 100. WORK IN STATE HIGHWAYS

100.01 If any of the work under this Contract is in a state highway the Contractor shall obtain all required permits at his own expense. The Contractor shall perform the work in accordance with the terms and conditions stipulated by the Connecticut Department of Transportation (ConnDOT) and/or as required by ConnDOT inspectors. The Contractor must provide such bonds, security and insurance as may be required to obtain such permits.

100.02 In the event the City, or the City and the Contractor jointly, are required to obtain any permits, including detour permits, the Contractor shall be familiar with the conditions of the permits and shall be held responsible for compliance with all the requirements of the permits and all specifications attached thereto, as if the permits were held solely by the Contractor.

100.03 Whenever State inspectors, flagmen or other costs are incurred as a condition to obtaining permits, the Contractor shall be responsible for payment of these costs with no reimbursement from the City.

100.04 The Contractor shall conform to all ConnDOT requirements for materials and construction methods for all work within state highways. Sheeting or an adequate trench box may be required in all trenching operations to confine trench widths and to protect State facilities. Additional pavement replacement may be required to properly restore the roadway surface.

100.05 The cost of all labor, materials and equipment necessary to conform to CONNDOT requirements for work in, or adjacent to, state highways, including work not specifically stated in the Contract Plans and Specifications, shall be the sole responsibility of the Contractor and shall not be reimbursed by the City. Therefore, the Contractor is informed to evaluate all CONNDOT requirements for the project prior to submitting the Bid/Proposal for the project and to include these costs in his bid/proposal prices.

ARTICLE 101. EXISTING INSPECTION REPORTS

101.01 Any existing inspection reports concerning the project which have been prepared by or for the City or Project Engineer will be made available for the Contractor's information.

ARTICLE 102. TEST REPORTS; CERTIFICATES OF COMPLIANCE AND SHIPPING LISTS

102.01 Except where expressly provided otherwise in the Contract Documents, the Contractor shall furnish to the Project Engineer the material manufacturer's notarized test reports and methods of testing by an approved independent laboratory in order to show compliance of all materials furnished with all specification requirements, the reports shall also contain manufacturer's notarized certificates of conformance stating that all materials furnished under these Specifications conform with all specification requirements; that each shipment of materials shall be accompanied by the manufacturer's notarized certificate of conformance and that a shipping list itemizing the amounts of each shipment shall accompany each shipment.

ARTICLE 103. CLEANING FINISHED WORK

103.01 After the work is completed, the sewers, manholes and structures shall be carefully cleaned free of dirt, broken masonry, mortar, construction and other debris and shall be left in first class condition, ready for use. All temporary or excess material shall be disposed of and the work left broom-clean to the satisfaction of the Project Engineer.

ARTICLE 104. COMPLIANCE TO ACTS AND EXECUTIVE ORDERS

104.01 If this Contract is federally assisted and the Contractor must comply with all applicable statutes, acts, executive orders and regulations, including without limitation:

(a) **TITLE VI, CIVIL RIGHTS ACT OF 1964** Provides that no person in the United States shall on the grounds of race, color or national origin be excluded from participation in, be denied the benefits of, or be subjected to discrimination under any program or activity, receiving Federal financial assistance.

(b) **SECTION 3, HUD ACT OF 1968** Provides that, to the greatest extent feasible, opportunities for training and employment shall be given to lower income residents of HUD-assisted project areas, and that contracts for work in connection with such projects be awarded to business concerns which are located in, or are owned in substantial part by persons residing in the area of the project.

(c) **LABOR STANDARDS** Compliance with Davis Bacon Act, as amended (40 U.S.C. 267a-5) Contract Work Hours and Safety Standards Act (40 U.S.C. 327-333) 13.0.

ARTICLE 105 SEMI-FINAL INSPECTION / SUBSTANTIAL COMPLETION

105.1 Contractor shall notify the Project Engineer when it believes the work (or a portion thereof) is Substantially Complete and shall file with the City a written, notarized "Contractor's Affidavit of Substantial Completion" and request a Semi-Final Inspection of the work.

105.2 Contractor, prior to requesting Semi-Final Inspection, shall complete and submit the following, listing known exceptions in its Affidavit of Substantial Completion:

i. Include supporting documentation for Substantial Completion as indicated in these Contract Documents.
ii. Include Drafts of all documentation for Final Completion as indicated in these Contract Documents.
iii. Advise City of outstanding permit closure requirements. Submit certificates of inspections conducted, reports, and other documentation required by local or state authorities.
iv. Where required, submit photographs, specific warranties, final certifications, and similar documents.
v. Provide Partial Waiver of Lien from each Subcontractor, supplier and the Contractor. All money due to Subcontractors and suppliers may be withheld from payment to the Contractor until Waivers of Lien indicate no money owed.
vi. Drafts of all required As-Builts, Record Drawings and Documents and Surveys, in number and formats specified.

105.3 Subsequent to City's receipt of Contractor's Affidavit of Substantial Completion, Project Engineer will either proceed with Semi-Final Inspection or advise Contractor of prerequisites not fulfilled.

105.4 Following Semi-Final Inspection, Project Engineer will either inform the City to prepare a Certificate of Substantial Completion, or advise Contractor of work that must be performed prior to issuance of said certificate, and repeat the inspection when requested and assured that the work has been substantially completed in accordance with the Contract Documents.

105.5 Contractor shall submit its **Semi-Final Payment Application** coincident with, or first following the date claimed as Substantially Complete, which shall be processed in the same manner as a partial payment requisition and shall show either 100% completion for the work claimed as Substantially Complete, and/or list incomplete items, value of incompletion, and reasons for being incomplete.

ARTICLE 106. CITY'S CERTIFICATE OF SUBSTANTIAL COMPLETION

106.1 For the portion of the work determined to be Substantially Complete, the City shall issue "City's Certificate of Substantial Completion" which shall establish the date of Substantial Completion by the Contractor.

106.2 Concurrently, the Project Engineer shall prepare a list (the "punchlist") of remaining items of work to be completed and/or deficiencies to be addressed.

106.3 The City reserves the right to modify, amend and/or update the "punchlist," as it deems necessary.

ARTICLE 107. LIMITED ACCEPTANCE OF WORK

107.01 Limited Acceptance of Portion(s) of the Work shall be at City's sole discretion and shall be subsequent to issuance of City's Certificate of Substantial Completion for such work and shall relieve Contractor of responsibility for the physical aspects of said portion of the work; however such termination of responsibility for the physical aspects of the work in no way affects or diminishes any other contractual requirements governing the work so accepted, or the issuance of a Notice of Project Acceptance of the Project as whole.

107.02 Documentation of any Limited Acceptance of Portion(s) of the Work shall be evidenced by City's issuance of a Certificate of Limited Acceptance of Work for such Work.

ARTICLE 108. FINAL INSPECTION

108.01 Contractor shall notify the Project Engineer when it believes the Project is Finally Complete and shall file with the City a written, notarized "Contractor's Affidavit of Final Completion" and request a Final Inspection of the work by the Project Engineer.

108.02 Subsequent to receipt of Contractor's Affidavit of Final Completion, Project Engineer will either proceed with Final Inspection and/or advise Contractor of prerequisites not fulfilled.

108.03 At the time of submission of its Affidavit of Final Completion, Contractor, as required by the Contract Documents and/or required for completion of the Project as determined by the City, shall also provide and/or submit the following:

i. Supporting documentation required by the Contract Documents not previously submitted and accepted.
ii. Discontinue and remove, as appropriate, temporary facilities and services, along with construction tools and facilities, and similar elements.
iii. A copy of City's final punch list of itemized work to be completed or corrected, stating that each item has been completed or otherwise resolved for acceptance, endorsed and dated by the Project Engineer.
iv. Final and complete versions of all required As-Builts, Record Drawings and Documents and Surveys, in number and formats specified.
v. Provide Final Waiver of Lien from each Subcontractor, supplier and the Contractor. All money due to Subcontractors and suppliers shall be withheld from payment to the Contractor until Waivers of Lien indicate no money owed.

108.04 Following Final Inspection, Project Engineer either informs advises Contractor of work that must still be performed, etc., and the process repeats or advises the City that that the Project is Finally Complete.

ARTICLE 109. FINAL CHANGE ORDER

109.01. Upon determination that Final Completion has been reached, the City shall, if necessary, prepare a **Final Change Order.** The "**Final Change Order"** shall show the total due Contractor under the Contract, including a final estimate of all quantities. Should there be a decrease in quantities, then such variations will be computed at the unit prices in the bid/proposal form and reflected in the **Final Change Order** by adding or deducting said amounts from the from the gross sum, as applicable.

109.02 The **Final Change Order** shall reflect the final Contract Amount, all prior City payments to the Contractor, all adjustments to the Contract Amount, all retainage held by the City, any liquidated damage amounts, all unused amounts of any Owner Controlled Allowances and of all Cash Allowances, all adjustments for Alternates accepted/declined by the City and final amount of any holdback(s) by the City.

109.03 All certificates of payments and estimates, upon which partial payments may have been made being merely estimates, shall be subject to correction by this **Final Change Order**.

109.04 Contractor shall execute the Final Change Order upon issuance by the City.

109.05 All Contractor's subsequent payment requisitions shall reflect the amounts and qualities set forth in the Final Change Order.

ARTICLE 110. FINAL PAYMENT APPLICATION

110.01 Based upon the amounts and qualities set forth in the Contract Documents, as may be revised by the Final Change Order, the Contractor shall submit its Final Payment Application requesting Final Payment due under the Contract, including all retainage held by the City.

110.02 All prior estimates and City payments, including those relating to extra or additional work, retainage(s), and holdback(s), shall be subject to correction by this Final Payment.

110.02 This Final Payment Application shall be certified as to its correctness by the Project Engineer and will be processed in the same manner as the partial payment requests.

ARTICLE 111. FINAL COMPLETION / CITY'S CERTIFICATE OF FINAL COMPLETION / NOTICE OF PROJECT ACCEPTANCE

111.01 Final Completion and Project Acceptance shall occur when:

i. All Project work and services have been completed and all required documentation/paperwork has been submitted in accordance with the Contract Documents.

ii. Contractor's **Final Payment Application** has been submitted, certified as to correctness by the Project Engineer, and submitted for processing of Final Payment.

iii. Upon written determination by Project Engineer that items (i) and (ii) above are complete, the City shall issue its **Certificate of Final Completion and Notice of Project Acceptance** to Contractor, establishing therein the date of Final Completion.

ARTICLE 112. ACCEPTANCE OF FINAL PAYMENT

112.01 The acceptance by the Contractor, or by anyone claiming by or through the Contractor, of Final Payment shall constitute and operate as a release for the City from any and all claims of any liability to the Contractor for anything, theretofore done or furnished for or relating to or arising out of the work done thereunder, and for any prior act of neglect, default on the part of the City or any of its officers, agents, or employees unless the Contactor serves a detailed and verified statement of claim upon the City not later than forty (40) consecutive calendar days after mailing of such Final Payment. Such statement shall specify the items claimed. Should the Contractor refuse to accept the Final Payment as tendered, it shall constitute a waiver of any right of interest thereon.

ARTICLE 113. 10-HOUR OSHA CONSTRUCTION SAFETY AND HEALTH COURSE

113.01 The Contractor, or any subcontractors working on the project, shall provide written proof that any and all employees working on the project jobsite have successfully completed the 10-Hour OSHA Construction Safety and Health Course.

END OF SECTION

Attachment B-1

NON-DISCRIMINATION CONTRACT LANGUAGE

Pursuant to Connecticut General Statutes Section 4a-60 and except as provided in section 10a-151i of the General Statutes, every contract to which a state agency or political subdivision of the state, including a municipality or quasi-public agency, is a party to shall contain the following provisions:

(1) The contractor agrees and warrants that in the performance of the contract such contractor will not discriminate or permit discrimination against any person or group of persons on the grounds of race, color, religious creed, age, marital status, national origin, ancestry, sex, sexual orientation, gender identity or expression, status as a veteran, status as a victim of domestic violence, status as a victim of sexual assault or status as a victim of trafficking in persons, intellectual disability, mental disability or physical disability, including, but not limited to, blindness, unless it is shown by such contractor that such disability prevents performance of the work involved, in any manner prohibited by the laws of the United States or of the state of Connecticut; and the contractor further agrees to take affirmative action to ensure that applicants with job-related qualifications are employed and that employees are treated when employed without regard to their race, color, religious creed, age, marital status, national origin, ancestry, sex, gender identity or expression, sexual orientation, status as a veteran, status as a victim of domestic violence, status as a victim of sexual assault or status as a victim of trafficking in persons, intellectual disability, mental disability or physical disability, including, but not limited to, blindness, unless it is shown by such contractor that such disability prevents performance of the work involved;

(2) The contractor agrees, in all solicitations or advertisements for employees placed by or on behalf of the contractor, to state that it is an "affirmative action-equal opportunity employer" in accordance with regulations adopted by the Commission on Human Rights and Opportunities;

(3) The contractor agrees to provide each labor union or representative of workers with which such contractor has a collective bargaining agreement or other contract or understanding and each vendor with which such contractor has a contract or understanding, a notice to be provided by the Commission on Human Rights and Opportunities advising the labor union or workers' representative of the contractor's commitments under this section, and to post copies of the notice in conspicuous places available to employees and applicants for employment;

(4) The contractor agrees to comply with each provision of this section and sections 46a-68e and 46a-68f and with each regulation or relevant order issued by said commission pursuant to sections 46a-56, 46a-68e, 46a-68f and 46a-86; and

(5) The contractor agrees to provide the Commission on Human Rights and Opportunities with such information requested by the commission, and permit access to pertinent books, records and accounts, concerning the employment practices and procedures of the contractor as relate to the provisions of this section and section 46a-56.

City of Waterbury
Department of Public Works

Memorandum

To: Board of Aldermen

From: Mark Lombardo, Deputy Director of Public Works M.L.

Date: October 6, 2026

Re: **Board of Aldermen Approval Request / DPW Executive Summary** – On Call Tree Service Agreement between the City of Waterbury and Cipully Tree Service, LLC RFP 8890

The Department of Public Works, requests your approval of the above-referenced agreement between the City of Waterbury and Cipully Tree Service, LLC.

There were four proposals that responded to RFP 8890 that were received by DPW. The four proposals were from Cipully Tree Service, LLC, Paulo Landscaping & Tree Removal, LLC, Hillview Property Maintenance and J&J Brothers, LLC. A selection committee was formed to review each of the respondent's experience, expertise and value-added services. Committee members were Mark Lombardo, Deputy Director, John Kollar, Supervisor of Parks and Chris Mauro, Golf Course Superintendent.

The selection committee met to complete the evaluation process and make a selection. The Selection Committee voted unanimously to award an On Call Tree Services Agreement to Cipully Tree Service, LLC.

Under this agreement, Cipully Tree Service, LLC will provide and perform maintenance as needed by the City of Waterbury. This is a one-year agreement and as an On-Call Agreement, there is no cost to the City associated with entering into the agreement. Costs will be as identified in any issued Task Orders and Purchase Orders in accordance with the On-Call Agreement.

All services requested under this agreement will be authorized through Task Orders and Purchase Orders following the rates and fees set forth in Contractor's Price Proposal, which has been incorporated into the agreement as part of Attachment A (see attached agreement). Each Task Order will set out, on a project by process basis, the desired scope of work, monetary terms and time of performance for such work, plus all other pertinent project specific information.

Included herewith is the *Disclosure and Certification of Obligations Affidavit Regarding Outstanding Obligations to the City of Waterbury* submitted by Cipully Tree Service, LLC in connection with this project and a copy of the Tax Clearance issued by the Office of Tax Collections.

Accordingly, attached are five (5) copies of the proposed contract for your review and consideration, plus one (1) copy to serve as 'record copy' for the City Clerk's Office.

Thank you.

cc. Attorney Lynn McHale, Staff Attorney, Office of the Corporation Counsel

MAINTENANCE SERVICES AGREEMENT
RFP No. 8890
for
ON-CALL TREE SERVICES
between
The City of Waterbury, Connecticut
and
CIPULLY TREE SERVICE, LLC

THIS AGREEMENT, effective on the date signed by the Mayor, is by and between the CITY OF WATERBURY, City Hall, 235 Grand Street, Waterbury, Connecticut 06702 (the "City") and CIPULLY TREE SERVICE, LLC, located at 35 ATWATER PLACE, CHESHIRE, CT 06410, a State of Connecticut duly registered domestic limited liability company (the "Contractor").

WHEREAS, the Contractor submitted a proposal to the City responding to **Request for Proposal ("RFP") Number 8890 for ON-CALL TREE SERVICES**; and

WHEREAS, the City accepted the Contractor's proposal for **RFP No. 8890**; and

WHEREAS, the City desires to obtain the Contractor's services pursuant to the terms, conditions and provisions set forth in this agreement (the "Project").

NOW THEREFORE, THE PARTIES AGREE AND COVENANT AS FOLLOWS:

1. Scope of Services. The Contractor shall furnish all of the labor, services, equipment, materials, supplies, transportation, and incidentals necessary to complete the Project as specified in this agreement (also referred to herein as "Contract") and such shall be completed in a satisfactory manner, as reasonably determined by the City. All labor, services, equipment, materials, supplies, transportation, and incidentals shall comply with **(i)** any and all applicable local, state and federal laws, statutes, ordinances, rules and regulations, including without limitation all notice requirements thereunder, and **(ii)** generally accepted professional standards.

1.1. The Project consists of **ON-CALL TREE SERVICES** as detailed and further described in the proposal documents in **Attachment A** and are hereby made material provisions of this Contract. **Attachment A** shall consist of the following, which are attached hereto, are acknowledged by the Contractor as having been received, or otherwise hereby incorporated by reference as noted below, and all are made a part hereof:

1.1.1 RFP Number 8890 (acknowledged by the Contractor as having been received and incorporated by reference);

1.1.2 **Addendum #1 to RFP Number 8890**, dated August 25, 2026 and consisting of 8 pages (attached hereto);

1.1.3 Contractor's Proposal, consisting of 24 pages, submitted in response to **RFP Number 8890**, and Contractor's Price Proposal, dated August 28, 2026 (signed August 31, 2026) and consisting of 3 pages (all attached hereto);

1.1.4 Certificates of Insurance (attached hereto);

1.1.5 Performance Bond and Payment Bond (incorporated by reference);

1.1.6 Special Conditions (Article 1 – Article 22) consisting of 6 pages (attached hereto);

1.1.7 General Conditions (Article 1 – Article 113) consisting of 35 pages (attached hereto);

1.1.8 Technical Specifications, RFP Attachment F, consisting of 5 pages (attached hereto);

1.1.9 Annual Statement of Financial Interests; Disclosure and Affidavit Re: Outstanding Obligations to the City; Debarment Certification; Corporate Resolution, Non-Collusion Affidavit (incorporated by reference);

1.1.10 Any and all amendment(s) and Change Orders issued by the City after execution of Contract (incorporated by reference);

1.1.11 All applicable Federal, State and local statutes, regulations, charter and ordinances (incorporated by reference); and

1.1.12 All permits (including, but not limited to, City of Waterbury Building permit(s)) and licenses (incorporated by reference).

1.2. The entirety of **Attachment A, Attachment B-1,** plus this executed instrument are together deemed the Contract Documents (hereinafter collectively referred to as "Contract Documents"). The City's record copy of the Contract Documents shall control and shall be effective and binding on the Contractor. In the event that any provision in the Contract Documents conflict with any other provision therein, the provision in the component part of the Contract Document first enumerated below shall govern over any other component part which follows it numerically.

1.2.1 Federal, State, and local laws, regulations, charter and ordinances

1.2.2 Contract Amendment(s) and Change Orders
1.2.3 Contract
1.2.4 Contractor's response to **RFP Number 8890** and Contractor's Price Proposal
1.2.5 Special Conditions
1.2.6 General Conditions
1.2.7 Technical Specifications

1.3. Task Order Development. The parties hereto agree that the City, through its Using Agency (i.e., City Department), may request from the Contractor at any time during the term of this Agreement a proposal to perform services pertaining to **On-Call Tree Service** that shall be completed within the Contract Time of this Agreement and as further provided in the applicable Task Order(s) and agreed to by the Contractor. The Using Agency shall issue for the Contractor's review, comment and approval a Task Order that:

1.3.1 assigns a Task Order number;
1.3.2 provides a general description of the Task Order project;
1.3.3 provides the time by which all work under the Task Order shall be completed;
1.3.4 proposes a not to exceed cost to perform all work under the Task Order with compensation being based upon the hourly rates provided in the Contractor's response to the City's **RFP Number 8890**;

1.4 The parties hereto agree that no work shall commence under a Task Order until and unless it has been fully executed by the Contractor (through its Project Manager) and by the City (through the Department Head of the Using Agency) and a City Purchase Order for said work has been issued.

1.5 Task Order Process. The parties hereto agree that for all Task Orders approved in writing by the City's Using Agency:

1.5.1 The Using Agency shall process a requisition with the City's Finance Department for each specific Task Order;
1.5.2 The Using Agency shall not issue a Notice to Proceed with the Task Order work to the Contractor until and unless the City issues a Purchase Order for such work; and
1.5.3 The Contractor shall provide invoices to the Using Agency on a monthly basis for services rendered under each Task Order during the period in question and shall include therewith a narrative detailing the services rendered during the period in question and any further information requested by the Using Agency.

2. Representations Regarding Qualification and Accreditation. The Contractor represents that its employees are licensed to perform the scope of work set forth in this Contract.

The Contractor further represents that its employees have the requisite skill, expertise and knowledge necessary to perform the scope of work required under the terms of this Contract, including any supplementary work and the City relies upon these.

2.1. Representations regarding Personnel. The Contractor represents that it has, or will secure at its own expense, all personnel required to perform the services under this Contract. Such personnel shall not be employees of or have any contractual relationship with the City, unless use of City employees or of personnel having a contractual relationship with the City is approved in writing. As set forth above, all the services required hereunder shall be performed by the Contractor or under its supervision and all personnel engaged in the work shall be fully qualified and shall be authorized or permitted under state or local law to perform such services.

2.2. Representations regarding Qualifications. The Contractor hereby represents that, to the extent required by Federal, State and Local statutes, regulations, codes, ordinances, and policies, that the Contractor and/or its employees be licensed, certified, registered, or otherwise qualified, the Contractor and all employees providing services under this Contract, are in full compliance with those statutes, regulations and ordinances. Upon City request, the Contractor shall provide to the City a copy of the Contractor's licenses, certifications, registrations, etc.

3. Responsibilities of the Contractor. All data, information, etc. given by the City to the Contractor and/or created by the Contractor shall be treated by the Contractor as proprietary to the City and confidential unless the City agrees in writing to the contrary and shall be used solely for the purposes of providing services under this agreement. The Contractor agrees to forever hold in confidence all files, records, documents and other information which may come into the Contractor's possession during the term of this agreement, except where a disclosure is expressly stated as a requirement of this agreement. Notwithstanding the foregoing, where a Contractor disclosure is required to comply with statute, regulation, or court order, the Contractor shall provide prior advance written notice to the City of the need for such disclosure. The Contractor agrees to properly implement the services required in the manner herein provided. The Contractor shall, in addition to any other responsibilities set forth in this Contract and the Schedules and Attachments hereto, perform the following coincident with the performance of this Contract:

3.1. Use of City Property. To the extent the Contractor is required to be on City property to render its services hereunder, the Contractor shall have access to such areas of City property as the City and the Contractor agree are necessary for the performance of the Contractor's services under this agreement (the "Site" or the "Premises") and at such times as the City and the Contractor may mutually agree.

3.2. Working Hours. Contractor's Working hours shall be 24 hours/7 days a week as needed by the City.

3.3. Cleaning Up. To the extent the Contractor is required to be on City property to render its services hereunder, the Contractor shall at all times keep the premises free from accumulation of waste materials or rubbish caused by Contractor, its employees or subcontractors, and at the completion of the work shall remove all rubbish from and about the project and all tools, scaffolding and surplus materials and shall leave the Premises "broom clean" or its equivalent, unless more exactly specified. In case of dispute, the City may remove the rubbish and charge the cost to the Contractor.

3.4. Publicity. Contractor agrees not to deliberately disclose the fact that the City has entered into or terminated this Contract or disclose any of the terms of the Contract or use the City's name in connection with any publicity, unless the City gives prior written consent to such use of the City's name in each instance.

3.5. Standard of Performance. All labor, services, equipment, materials, reports, plans, specifications, drawings, deliverables, incidentals, etc., either at the Premises or intended for it, shall conform in all respects with the requirements of this agreement, and shall be the best obtainable from the crafts and trades. In all cases, the labor, services, equipment, materials, reports, plans, specifications, drawings, deliverables, incidentals, etc. shall be equal to or better than the grade specified, and the best of their kind that is obtainable for the purpose for which they are intended.

3.5.1 The standard of care and skill for all services performed by the Contractor shall be that standard of care and skill ordinarily used by other members of the Contractor's profession practicing under the same or similar conditions at the same time and in the same locality. The Contractor's services rendered hereunder shall be rendered completely and by qualified personnel in accordance with standard industry practice.

3.6. Contractor's Employees. The Contractor shall at all times enforce strict discipline and good order among its employees, and shall not employ any unfit person or anyone not skilled in the work assigned.

3.7. Due Diligence Obligation. The Contractor acknowledges its responsibilities to examine and to be thoroughly familiar with the City's RFP documents, including, but not limited to the specifications, and any addenda thereto. The Contractor hereby warrants and represents that prior to the submission of its proposal during the RFP process, it reviewed or was afforded opportunity, by the City, to review all physical items, facilities, services or functions essential to the satisfactory performance of the services required ("Due Diligence") and thereby certifies that all such items facilities, services or functions are included in this agreement and thereby warrants that:

3.7.1 it conducted or had opportunity to conduct all Due Diligence prior to the submission of its proposal and, accordingly, any additional costs, services or products resulting from the failure of the Contractor to complete Due Diligence prior to submission of its proposal shall be borne by the Contractor. Furthermore

the Contractor had the opportunity during the RFP process to ask questions it saw fit and to review the responses from the City;

3.7.2 its failure or omission to make investigation and verification of data shall, in no way, be cause for future claim of ignorance of such data or conditions nor shall such failure to investigate and verify be the basis for any claim whatsoever, monetary or otherwise;

3.7.3 it is solely responsible for resolving any issues resulting from the failure to conduct Due Diligence and shall assume any costs that may result during the implementation of the Project, including, but not limited to, adherence to specifications and pricing for the Project.

3.7.4 it was responsible for specifying any changes and disclosing any new costs prior to the submittal of its proposal. Thus, in the event any changes or costs are disclosed by the Contractor, or otherwise required, during the performance of its services, the sole responsibility for any modification, delay and cost of such changes shall reside with the Contractor.

3.7.5 has familiarized itself with the nature and extent of the Contract Documents, Work, locality, and with all local conditions and Federal, State and Local laws, ordinances, rules and regulations that in any manner may affect cost, progress or performance of the Work;

3.7.6 has given the City written notice of any conflict, error or discrepancy that the Contractor has discovered in the City's RFP documents and other documents for **RFP Number 8890** (collectively "Proposal Documents"); and

3.7.7 agrees that the Proposal Documents are sufficient in scope and detail to indicate and convey understanding of all terms and conditions for performance of the Work.

3.8. Safety. Contractor shall perform all work in full compliance with Local, State and Federal health and safety regulations. All work hereunder shall be performed in a safe manner. Contractor shall immediately correct any dangerous condition caused by or resulting from its work. If it fails to correct, or to act diligently to correct, any condition which City reasonably believes to be a hazard to persons or property, then immediately upon oral or written notice to any supervisory or similar personnel of Contractor, City may, but shall not be required to, correct same at Contractor's expense. City shall confirm in writing any oral notice given within five (5) days thereafter.

3.9. Permits and Licenses. Unless expressly stated to the contrary in Section 1 of this Contract and **Attachment A**, the Contractor shall secure and obtain all permits and all licenses required, or necessary, or prudent for the performance of the Contractor's obligations under this Contract and for the City's occupancy, use, and operation of the

Project.

3.10. Manufacturer's Directions. Where it is required in this Contract that materials, products, processes, equipment or the like be installed or applied in accord with manufacturer's directions, specifications or instructions, it shall be construed to mean that the said application or installation by the Contractor shall be in strict accord with printed instructions furnished by the manufacturer of the material concerned for use under conditions similar to those at the Project site. Except as may be otherwise required in Attachment A, one (1) copy of such instructions shall be furnished to the City.

3.11. Review by the City. The Contractor shall permit the City and the City's duly authorized representatives and agents to review, at any time, all work performed under the terms of this Contract at any stage of the Project.

3.12. Records Maintenance. The Contractor shall maintain or cause to be maintained complete records documenting compliance with its obligations under the Connecticut General Statutes, the regulations of the Commission on Human Rights and Opportunities, and this Contract, including records of good-faith-efforts, subcontractor solicitations, bids received, awards, payments, documents relative to charges, costs, expenses fees, alleged breaches of contract, settlement of claims or other matters pertaining to the Contractor's demand for payment, workforce information, certifications, correspondence and filings with the Commission on Human Rights and Opportunities, for the period required by applicable law and regulations of the Commission on Human Rights and Opportunities.

3.13. Reporting Requirement. The Contractor shall deliver periodic, written reports to the City's Using Agency setting forth **(i)** the issue date of the report, **(ii)** the time period covered by the report, **(iii)** a brief description of the work and services completed by the Contractor and/or delivered by the Contractor during the time period covered by the report, **(iv)** expressed as a percentage of the total work and services required under this contract, the percentage of the total work represented by the work and services described in subsection iii above, **(v)** expressed as a percentage of this contract's Section 6 total compensation, the percentage of the total compensation represented by the work and services described in subsection iii above, **(vi)** the Contractor's declaration as to whether the entirety of the Contractor's work and services required in this Contract will be, or will not be, completed within the Contract's Section 6 total compensation amount, and **(vii)** any and all additional useful and/or relevant information. Each report shall be signed by a duly authorized employee of the Contractor.

NOTE: the Contractor's failure to deliver any report required herein shall be deemed a material breach of this Contract, the City hereby reserving the right to exercise all available legal remedy(ies) to address said breach.

3.14. FUNDING REQUIREMENTS. The Contractor is hereby put on notice that this Contract may be considered a public works contract, is anticipated to be funded in whole

or in part by State of Connecticut Local Capital Improvement Program ("LoCIP") and/or TOWN AID ROAD PROGRAM (TAR) funds, and Contractor shall comply with all LoCIP and TAR requirements, including but not limited to State of Connecticut Set-Aside requirements (See Section 12 of this Contract), Commission on Human Rights and Opportunities (CHRO) requirements (See Section 13 of this Contract), as may be applicable, and **Attachment B-1** "Non-Discrimination Contract Language", dated REV.07012026, attached hereto and incorporated herein.

4. Responsibilities of the City. Upon the City's receipt of the Contractor's written request, the City will provide the Contractor with documents, data and other materials the City agrees are necessary and appropriate to the services to be performed by the Contractor hereunder and the City will endeavor to secure, where feasible and where the City agrees it is necessary and appropriate, materials or information from other sources requested by the Contractor for the purpose of carrying out the services under this Contract.

4.1. The City may, in its sole discretion, designate person(s) to act as the City's Project Engineer(s) and/or Manager(s) and the City may, in its sole discretion, define such person(s) authority and responsibilities.

4.2. The City reserves the right to **(i)** perform work related or unrelated to the Project with the City's own forces adjoining, adjacent to, or in the vicinity of, the Project site and/or **(ii)** let separate contracts related or unrelated to the Project for work and services adjoining, adjacent to, or in the vicinity of, the Project site. In such event, the Contractor shall afford all such parties reasonable opportunity for storage of materials and equipment and for the uninterrupted provision and delivery of such parties' work and/or services. The Contractor shall cooperate with such parties and in the case of a dispute, the decision of the City shall be complied with by all.

5. Contract Time. The Contractor shall reach Final Completion of all work and services required under this contract within **Three Hundred Sixty-Five (365) consecutive calendar days** of the City's written Notice to Proceed ("Contract Time").

5.1. On a monthly basis, the Contractor shall deliver to the City a written status report setting forth an analysis and critique of the Contractor's compliance with said schedule.

5.2. Delay Damages. Time is and shall be of the essence for all Project milestones, the Substantial Completion Date and the Final Completion Date for the Project. The Contractor further agrees that the Project shall be prosecuted regularly, diligently and uninterruptedly and at such rate of progress as will insure full completion thereof within the Contract Time stated above. It is expressly understood and agreed, by and between the Contractor and City, that the Contract Time is reasonable for the completion of the Project.

5.2.1. The Contractor shall pay to the City the sum of the greater of **ONE HUNDRED DOLLARS AND ZERO CENTS ($100.00)** per calendar day for

each and every calendar day for which the Contractor is in default in completing the work beyond the Final Completion Date, Substantial Completion Date, Milestones and Phase Completion Dates, as set forth in Section 5, or the actual damages incurred by the City caused by the delay. The preceding sum is hereby agreed upon not as a penalty, but as delay damages for the delay that the City shall suffer due to such default.

5.2.2. The City shall have the right to recover all damages pursuant to any remedy at law or equity including but not limited to deducting the amount of any such damages from any monies due the Contractor under this Contract. The Contractor understands that if the entire Work or of any portion of the Work that the City has agreed to accept separately, if any, is not attained by the applicable completion dates as set forth in the entire Section 5, the City will suffer damages, which are difficult to specify accurately and ascertain. Delay damages based upon delay shall be assessed to compensate the City for all actual loss sustained by the delay, including, but not limited to, loss of use, increased cost of material or services to complete the project, loss of State funding, all other actual expense, and all other damages allowed by law, including attorney's fees.

5.3 No Damage for Delay. In no event shall the Contractor be entitled to any compensation or recovery of any damages in connection with any Delay, including, without limitation, consequential damages, lost opportunity damages, attorney's fees or other, similar remuneration. The City's exercise of any of its rights or remedies under the Contract Documents, including without limitation, ordering changes in the Work, or directing suspension, rescheduling or correction of the Work, regardless of the extent or frequency of the City's exercise of these rights has been contemplated by the parties and shall not be construed as an exception.

6. Compensation. The City shall compensate the Contractor for satisfactory provision of all of the goods and services set forth in this Contract as follows in this Section 6. No claims for additional compensation will be considered for conditions made known to the Contractor prior to bidding. No claims for additional compensation will be considered on account of failure of the Contractor to completely inform itself as required herein above.

6.1. Fee Schedule. The fee payable to the Contractor shall be in accordance with the Contractor's response to **RFP No. 8890**, and Contractor's Price Proposal, dated August 28, 2026 (signed August 31, 2026), and all applicable fully executed Task Orders and issued Purchase Orders.

6.2. Limitation of Payment. Compensation to the Contractor is limited to those fees set forth in Section 6.1. above and is further limited to work **(i)** performed in fact, **(ii)** conforming with this Contract, and **(iii)** accepted in writing by a duly authorized City employee. Such compensation shall be paid by the City upon its review and approval of the Contractor's invoices for payment and review of the Contractor's work, services,

reports, plans, specifications, deliverables, etc. rendered and the compensation sought therefore in a form and with detail and clarity acceptable to the City.

6.2.1 Funding. In the event this Contract is funded, in whole or in part, by Federal and/or State monies, grants, loans, etc, all City payment(s) shall fully comply with all relevant Federal and State statutes and regulations. In the event this Contract is 100% funded by Federal and/or State monies, grants, loans, etc., the aggregate sum of all City payments shall not exceed the aggregate sum of such funding.

6.2.2 The Contractor and its affiliates are hereby provided with notice that the City reserves the right, in the City's sole discretion, to offset, withhold, or otherwise reduce City payment(s) to the Contractor, in an amount equaling the sum or sums of money the Contractor and/or its affiliates is/are, or become delinquent or in arrears on, regarding the Vendor's and/or its affiliates real and personal property taxes and other payment obligations to the City.

6.2.3 No Payment for Lost Profits. In no event shall the City be obligated to pay or otherwise compensate the Contractor for any lost or expected future profits.

6.2.4 Retainage. At the City's sole discretion, it hereby reserves the right to withhold as retainage five percent (5.0 %) of any payment (or monetary sum otherwise required by law) owed to the Contractor to be withheld from payments to the Contractor otherwise payable to the Contractor until such time as the Contractor's work and services to be provided under this Contact are fully completed and accepted in writing by the City. The retainage does not does not include additional sums that the City may withhold due to the Contractor's failure to comply with provisions of this Contract.

6.2.4.1 On public works contracts valued at one million dollars or more or for projects for which a construction manager has entered into a public works contract providing for a guaranteed maximum price valued at one hundred fifty thousand dollars or more, C.G.S. § 46a-68e requires that the awarding agency "shall withhold two percent of the total contract price per month from any payment made to such contractor until such time as the contractor has submitted all compliance reports required by the Commission." The term "awarding agency" is defined by C.G.S. § 4a-60g as "a state agency or political subdivision of the state, including a municipality or quasi-public agency.

6.2.4.2 Contractor is hereby put on notice that CHRO's written approval is required prior to the City releasing withheld retainage per Section 6.2.4.1.

6.2.4.3 The two percent (2.0 %) provided in Section 6.2.4.1 is part of the five percent (5.0 %) retainage provided in Section 6.2.4, not in addition to such retainage.

6.3. Review of Work. The Contractor shall permit the City to review, at any time, all work performed under the terms of this Contract at any stage of the work. The Contractor shall maintain or cause to be maintained all records, books or other documents relative to charges, costs, expenses, fees, alleged breaches of the agreement, settlement of claims or any other matter pertaining to the Contractor's demand for payment. The City shall not certify fees for payment to the Contractor until the City has determined that the Contractor has completed the work in accordance with the requirements of this Contract.

6.4. Proposal Costs. All costs of the Contractor in preparing its proposal for **RFP No. 8890** shall be solely borne by the Contractor and are not included in the compensation to be paid by the City to the Contractor under this Contract or any other agreement.

6.5. Payment for Services, Materials, Appliances, Employees. The Contractor shall be responsible to the City for the suitability of services, materials and equipment furnished to comply fully with the requirements set forth in this Contract. The Contractor shall promptly pay all employees as their pay falls due, shall pay promptly as they fall due all bills for subcontractors, materials, supplies and services going into the work, and all bills for insurance, bonds, Worker's Compensation coverage, Federal and State Unemployment Compensation, and Social Security charges applicable to this Project. Before final City payment is made, the Contractor shall furnish to the City a sworn, notarized, affidavit stating that all of the foregoing payment obligations have been fully completed.

6.6. Liens. Neither the City's final payment nor any part of the retained percentage, if any, shall become due until the Contractorshall deliver to the City a complete release of all liens arising out of this Contract, or receipts in full in lieu thereof, and, in either case, an affidavit that so far as the Contractor has knowledge or information, the releases and receipts include all the labor and material for which a lien could be filed; but the Contractor may, if any subcontractor refuses to furnish a release or receipt in full, furnish a bond satisfactory to the City, to indemnify it against any lien. If any lien remains unsatisfied after all payments are made, the Contractor shall refund to the City all moneys that the City may be compelled to pay in discharging such a lien, including all costs and a reasonable attorney's fee.

6.7. No Payment for Lost Profits. In no event shall the City be obligated to pay or otherwise compensate the Contractor for any lost or expected future profits.

7. Warranty of the Contractor. Contractor warrants to the City that all materials, supplies, components, equipment, etc. furnished under this Contract shall be new and of good

quality, except as otherwise expressly stated and permitted by the City elsewhere in this Contract. The Contractor warrants that none of its work shall be defective. The Contractor shall be liable to repair and install and/or replace without charge any service, component, equipment or part thereof which is defective or does not conform with this Contract within the greater of (i) **three hundred sixty-five (365)** calendar days after the City delivers its written notice of its acceptance of the Project and statement therein establishing the final completion date, or (ii) that time period or date expressly stated elsewhere in this Contract or **Attachment A**.

7.1. The Contractor further warrants that all materials, supplies, services, components, equipment, reports, plans, drawings, deliverables, incidentals, etc., shall be free from any and all defects caused by faulty design, faulty material or poor workmanship. The Contractor shall supply to the City copies of any written manufacturer's warranties and guarantees. The Contractor's foregoing warranty obligations are in addition to, and not a limitation of, all manufacturer's warranties and guarantees, and any other remedy stated in this contract or otherwise available to the City under applicable law.

8. Passing of Title and Risk of Loss.

8.1. City beneficial use of Project equipment, materials, site-work, etc. prior to the Contractor's final completion of the Project or prior to the City's final payment for the Project shall neither act to vest title in the City nor act to transfer risk of loss from the Contractor to the City. Said title and risk shall pass to the City upon the City's final payment for the Project.

8.2. Contractor and its insurer shall assume the risks of loss or damage to the equipment up to and including the date title passes, except that City shall be responsible for loss or damage caused by City's gross negligence.

8.3. After Project equipment, materials, etc. are delivered to the Project work-site and become operable or functional, the Contractor shall not thereafter remove any such equipment, materials, etc. from the Project work-site without securing the prior written consent of an authorized City Using Agency employee.

9. Indemnification.

9.1. The Contractor shall indemnify, defend, and hold harmless the City, City's Boards, and Board of Education, commissions, agents, officials and employees from and against all claims, suits, damages, losses, judgments, costs and expenses including attorney's fees arising out of or resulting from the delivery of the labor, services, equipment, materials, reports, plans, specifications, design, drawings, deliverables, incidentals, etc. provided that any such claims, suits, damages, losses, judgments, costs or expenses **(i)** are attributable to bodily injury, sickness, disease or death, or to injury to or destruction of tangible property, including the loss of use resulting there from, **(ii)** are alleged to be caused in whole or in part by any willful, intentional, negligent, or reckless

act or omission of the Contractor, its employees, any subcontractor or consultant, anyone directly or indirectly employed by any of them or anyone for whose acts any of them may be liable, regardless of whether or not it is caused in part by a party indemnified hereunder; **(iii)** enforcement action or any claim for breach of the Contractor 's duties hereunder or **(iv)** claim for intangible loss(es) including but not limited to business losses, lost profits or revenue, regardless of whether or not it is caused in part by a party indemnified hereunder.

9.2. In any and all claims against the City, Board of Education or any of City's boards, agents, employees or officers by the Contractor or any employee of the Contractor, any subcontractor or consultant, anyone directly or indirectly employed by any of them or anyone for whose acts any of them may be liable, the indemnification obligation under Paragraph 9 above, shall not be limited in any way by any limitation on the amount or type of damages, compensation or benefits payable by or for the Contractor or any subcontractor under Worker's Compensation Acts, disability benefit acts or other employee benefit acts.

9.3. The Contractor understands and agrees that any insurance required by this Contract, or otherwise provided by the Contractor, shall in no way limit the responsibility to indemnify, defend, keep and hold harmless the City, the Board of Education, any of City's boards, agents, employees as provided in this Contract.

9.4. The Contractor expressly understands and agrees that any performance bond or insurance protection required by this Contract, or otherwise provided by the Contractor, shall in no way limit the responsibility to indemnify, keep and save harmless and defend the City and the City's boards, agents, employees or officers as provided herein.

9.5. Royalties and Patents. The Contractor shall, for all time, secure to the City the free and undisputed right to the use of any and all patented articles and methods used in the work and shall defend at Contractor's own expense any and all suits for infringement or alleged infringement of such patents, and in the event of adverse award under patent suits, the Contractor shall pay such awards and hold the City harmless in connection with any patent suits that may arise as a result of installations made by the Contractor and as to any award made thereunder.

9.6. In the event this Contract and/or the Contractor's, or its subcontractor, work and services provisioned hereunder is/are subject to the provisions of any Federal or State statute or regulations, or the City Charter or City Ordinance, the Contractor shall indemnify, defend and hold harmless the City from any fine, penalty or other amounts imposed on the City under said statutes, regulations, Charter or Ordinances, if caused by Contractor, or its subcontractor, omission or commission.

10. Contract Bonds. In the City's sole discretion, the City may elect to require the Contractor to furnish to the City a performance bond or payment bond or both, each bond written for a penal sum equaling the "Total Compensation" amount of each Task Order, in a form and

with a surety, acceptable to the City. If the City elects to require such bonds, the City shall include such requirement in any Task Order for which such bonds will be required by the City. The Contractor shall then furnish to the City any required bond prior to the issuance of the corresponding Purchase Order by the City. The bonds shall continue in effect for the greater of **(i)** the warranty period set forth in Section 7 of this Contract, or **(ii)** 365 calendar days after City delivers its written notice of its acceptance of all projects identified in any fully executed Task Order.

11. Contractor's Insurance.

11.1. The Contractor shall not commence work under this Contract until all insurance required under this Section 11 has been obtained by the Contractor and such insurance has been approved by the City. The Contractor shall not allow any subcontractor to commence work on any subcontract until all insurance required of any such subcontractor has been so obtained and approved by the City. Insurance shall be provided by insurers, satisfactory to the City and authorized to do business in the State of Connecticut, an "A-" Best's Rating and at least a Class VIII or better financial size category as shown in the most current A.M. Best Company ratings.

11.2. At no additional cost to the City, the Contractor shall purchase and maintain the insurance coverages set forth below which shall protect the City from claims which may arise out of or result from the Contractor's obligation under this Contract, whether such obligations are the Contractor's or subcontractor or person or entity directly or indirectly employed by said Contractor or subcontractor, or by any person or entity for whose acts said Contractor or subcontractor may be liable.

11.3. Each insurance policy shall state that the insurance company shall agree to investigate and defend the insured against all claims for damages, even if groundless. If any insurance required herein is to be issued or renewed on a claims made form as opposed to an occurrence form, the retroactive date for coverage shall be no later than the commencement date of this Contract and shall provide that in the event of cancellation or non-renewal, the discovery period for insurance claims ("Tail Coverage") shall be available for at least 60 months.

11.4. The following policies with stated limits shall be maintained, in full force and effect, at all times during which the services are to be performed by the Contractor:

11.4.1 General Liability Insurance:
$1,000,000.00 each Occurrence
$2,000,000.00 General Aggregate
$2,000,000.00 Products and Completed Operations Aggregate

11.4.2 Automobile Liability Insurance:
$1,000,000.00 combined single limit (CSL)
Any Auto, All Owned and Hired Autos

11.4.3 Workers' Compensation:
Statutory Limits within the State of Connecticut:
Employers' Liability:
$1,000,000.00 EL Each Accident
$1,000,000.00 EL Disease Each Employee
$1,000,000.00 EL Disease Policy Limit

11.4.4 Excess/Umbrella Liability Insurance:
$1,000,000.00 each Occurrence
$1,000,000.00 Aggregate

11.5. Failure to Maintain Insurance: In the event the Contractor fails to maintain the minimum required coverage as set forth herein, the City may at its option purchase same, and offset the Contractor's invoices for the cost of said insurance.

11.6. Cancellation: The City of Waterbury shall receive written notice of cancellation from the Contractor at least thirty (30) calendar days prior to the date of actual cancellation, regardless of the reason for such cancellation.

11.7. Certificates of Insurance: All Contractor's Insurance except Workers' Compensation shall be endorsed to add the City of Waterbury and its Board of Education as additional insured and provide waiver of subrogation on all policies. The insurance afforded the additional insured shall be primary and non-contributory insurance and the coverage and limits provided under the Contractor's policies shall not be reduced or prorated by the existence of any other insurance applicable to any loss the additional insured may have suffered. Prior to the execution of this Contract by the City, the Contractor shall furnish to the City, subject to City approval, certificate(s) of insurance and Additional Insured Endorsement and Waiver of Subrogation Endorsement verifying the above coverages, including the naming of the City of Waterbury, as follows: **"The City of Waterbury and its Board of Education are listed as Additional Insured on a primary and non-contributory basis on all policies except Workers' Compensation. All policies shall include a Waiver of Subrogation."** The City's RFP Number must be shown on the certificate of insurance to assure correct filing. The Contractor must supply replacement/renewal certificates at least 30 days prior to the expiration of the policy(ies). Said certificates shall contain a provision that coverage afforded under the policies shall not be cancelled or reduced for any reasons unless notice of than thirty (30) calendar days has been mailed to the City's Using Agency and a copy to the City's Office of Corporation Counsel, 235 Grand Street, Waterbury, CT 06702.

11.8. No later than thirty (30) calendar days after Consultant receipt, the Consultant shall deliver to the City a copy of the Consultant's insurance policies and endorsements and riders.

11.9. If any policy is written on a "Claims Made" basis, the policy must be continually renewed for a minimum of two (2) years from the completion date of this contract. If the policy is replaced and/or the retroactive date is changed, then the expiring policy must be endorsed to extend the reporting period for claims for the policy in effect during the contract for two (2) years from the completion date.

11.10. Original, completed Certificates of Insurance must be presented to the City of Waterbury prior to contract issuance. Contractor agrees to provide replacement/renewal certificates at least thirty (30) calendar days prior to the expiration date of the policies. Should any of the above described policies be cancelled, limits reduced or coverage altered, thirty (30) calendar days written notice must be given to the City of Waterbury.

12. Conformance with Federal, State and Other Jurisdictional Requirements. By executing this Contract, the Contractor represents and warrants that, at all pertinent and relevant times to the Contract, it has been, is and will continue to be in full compliance with all applicable statutes, acts, ordinances, guidelines, resolutions, orders, judgments, decrees, injunctions, rules, and regulations of all government authorities applicable to performance by the Contractor of services hereunder, including those having jurisdiction over its registration and licensing to perform services hereunder; including, but not limited to, the following: EQUAL EMPLOYMENT OPPORTUNUTY; COPELAND ANTI-KICKBACK ACT, as supplemented in the Department of Labor Regulations (29 CFR, Part 3); DAVIS BACON ACT as supplemented by Department of Labor Regulations (29 CFR Part 5); Section 103 and 107 of the Contract Work Hours and Safety Standards Act, as supplemented by the Department of Labor Regulations (29 CFR Part 5); the HOUSING and COMMUNITY DEVELOPMENT ACT of 1974, as amended, TITLE 31 and Section 12-430(7) of the State of Connecticut General Statutes. All applicable sections of the City Charter and Code of Ordinances are incorporated by reference made a part hereof.

12.1. Taxes-Federal, State and Local. The City is exempt from Federal Excise and Transportation, State and Local Sales and Use Taxes, including without limitation, taxes that would otherwise be imposed upon the Contractor for transactions required or necessitated hereunder between it and its subcontractors, suppliers, etc. The Contractor remains liable, however, for any applicable tax obligations it incurs. Moreover, the Contractor represents that the bid and pricing contained in this Contract do not include the amount payable for said taxes.

12.2. Labor and Wages-Federal and State. The Contractor and its subcontractors shall conform to Federal and State of Connecticut labor laws, and all other laws, ordinances, and legal requirements affecting the work in Connecticut.

12.2.1 The Contractor is aware of, and shall comply with, the provisions of Title 31, §53 of the Connecticut General Statutes, latest revision (the "Act"), concerning the payment of minimum wages for work on public facilities. The provisions of the Act are hereby incorporated by reference and made a part of this Contract. The Act provides that the Connecticut prevailing wage law applies

to certain remodeling, refurbishing, alteration, repair and new construction. The wages paid on an hourly basis to any person performing the work of any mechanic, laborer or worker on the work herein contracted to be done and the amount of payment or contribution paid or payable on behalf of each such person to any employee welfare fund, as defined in Con. Gen. Stat. 31-53(i), shall be at a rate equal to the rate customary or prevailing for the same work in the same trade or occupation in the town in which such public works project is being constructed. Any contractor who is not obligated by agreement to make payment or contribution on behalf of such persons to any such employee welfare fund shall pay to each mechanic, laborer or worker as part of such person's wages the amount of payment or contribution for such person's classification on each pay day.

12.2.2 The Contractor is aware of, and shall comply with, the provisions of both the Federal Davis-Bacon Act and the Federal American Recovery and Reinvestment Act of 2009, the provisions of both acts hereby incorporated by reference and made a part of this Contract. The Federal Davis-Bacon Act provides that Federal wage rate laws apply to certain federally funded contracts. The American Recovery and Reinvestment Act ("ARRA") provides that Federal wage rate laws apply to all ARRA funded contracts regardless of the contract's dollar value.

12.3. Compliance with Chapters 34, 38, and 39 of the Code of Ordinances of the City. By executing this Contract, the Contractor represents and warrants that, at all pertinent and relevant times to the Contract, it has been, is and will continue to be in full compliance with the provisions of Chapters 34, 38, and 39 of the Code of Ordinances of the City and well as any other relevant provisions of the Charter and the Code of Ordinances.

12.4. Compliance with CONN. GEN. STAT. § 4a-60g, amended by Public Act 25-168, and, as may be amended from time to time.

12.4.1 Definitions – For purposes of Section 12.4 and Section 13.3 of this Contract:

i. "Awarding agency" means a state agency or political subdivision of the state, including a municipality or quasi-public agency.

ii. "Minority business enterprise" means any small contractor (A) fifty-one per cent or more of the capital stock, if any, or assets of which are owned by a person or persons who (i) exercise operational authority over the daily affairs of the enterprise, (ii) have the power to direct the management and policies and receive the beneficial interest of the enterprise, (iii) possess managerial and technical competence and experience directly related to the principal business activities of the enterprise, and (iv) are members of a minority, as defined in subsection (a) of section 32-9n, or are individuals with a disability, or (B) which is a nonprofit

corporation in which fifty-one per cent or more of the persons who exercise operational authority over the enterprise, (i) possess managerial and technical competence and experience directly related to the principal business activities of the enterprise, (ii) have the power to direct the management and policies of the enterprise, and (iii) are members of a minority, as defined in this subsection, or are individuals with a disability.

iii. "Public works contract" means any agreement (A) for construction, rehabilitation, conversion, extension, demolition or repair of changes or improvements in real property, and (B) that is financed in whole or in part by the state, including, but not limited to, matching expenditures, grants, loans, insurance or guarantees, where such funding equals one hundred fifty thousand dollars or more.

iv. "Small contractor" means (A) any contractor, subcontractor, manufacturer, service company or corporation that (i) maintains its principal place of business in the state, and (ii) is registered as a small business in the federal database maintained by the United States General Services Administration, as required to do business with the federal government, or (B) any nonprofit corporation that (i) maintains its principal place of business in the state, (ii) that had gross revenues not exceeding twenty million dollars in the most recently completed fiscal year prior to such application, and (iii) that is independent.

12.4.2 The Contractor and subcontractor shall comply with the specific requirements of the State of Connecticut Set Aside Program, CONN. GEN. STAT. § 4a-60g, **amended by Public Act 25-168, and as may be amended from time to time,** if the public works contact awarded to the Contactor is funded as provided in 12.4.3 below.

12.4.3 The Contactor shall be subject to the following set-aside requirements if the public works contact, is funded in whole or in part by the State of Connecticut, and is equal to, or in excess of ONE HUNDRED FIFTY THOUSAND DOLLARS ($150,000.00).

12.4.4 Set-Aside requirements – Any contractor awarded a public works contract, on the basis of competitive bidding procedures, shall comply with the following Set –Aside requirements:

i. This contract is subject to state contract compliance requirements, including nondiscrimination statutes and spending allocation goals. There is $TBD in state-funding for this project. State law requires project-specific goals be set for this project based on the project's needs and available Small Business Enterprises ("SBEs") and Minority Business Enterprises ("MBEs"). The SBE goal for this project is N/A. The MBE goal

for this project is N/A. The selected contractor must demonstrate good faith effort to meet the spending allocation goals.

12.4.5 No Affiliated Subcontracting to Satisfy Goal. The Contractor shall not subcontract with an affiliated person or entity in violation of Conn. Gen. Stat. § 4a-60g. An affiliated contractor or subcontractor shall not be credited toward the City's spending-allocation goals where such credit is prohibited by law.

12.4.5.1 Changes in Subcontractors. The Contractor shall not replace, terminate, materially reduce the work of, or otherwise alter the participation of a small contractor or minority business entity identified for purposes of satisfying a spending allocation goal without providing the City with prior written notice and satisfying all requirements imposed by the Commission on Human Rights and Opportunities and applicable law. The Contractor shall document good-faith efforts to replace any subcontractor with another qualified certified contractor where required by law or the Commission on Human Rights and Opportunities.

12.4.6 Failure of the Contractor or subcontractor to comply with the State of Connecticut Set-Aside program requirements, including, but not limited to, good faith efforts plan and compliance report submissions, shall be a material breach of this Contract. If required by the City, the Contractor shall provide the City with evidence of submission and disposition of all required State of Connecticut Set-Aside programs reports.

13. Discriminatory Practices. In performing this Contract, the Contractor shall not discriminate against any employee or applicant for employment, with respect to his or her hire, tenure, terms, conditions or privileges of employment, or any matter directly or indirectly related to employment, because of race, color, sex, age, religious creed, disability, national origin or ancestry, marital status, family status, prior psychiatric treatment, health care, military status or source of income or because of a handicap that is unrelated to the employee's or the applicant's ability to perform the duties of a particular job or position. Subcontracts with each subcontractor shall contain a provision requiring non-discrimination in employment as herein specified. This covenant is required pursuant to §93.04 of the Code of Ordinances of the City and any breach thereof may be regarded as a material breach of this Contract. Said provisions with subcontractors shall require conformity and compliance with all local, state and federal laws, rules and regulations and Executive orders pertaining to discrimination and equal opportunity requirements.

13.1. Discrimination Because of Certain Labor Matters. No person employed on the work covered by this Contract shall be discharged or in any way discriminated against because such person has filed any complaint or instituted or caused to be instituted any proceeding or has testified or is about to testify in any proceeding under or related to the labor standards applicable hereunder to its employer.

13.2. Equal Opportunity. In its execution of the performance of this Contract, the Contractor shall not discriminate and shall comply with applicable laws prohibiting discrimination on the grounds of race, color, religion, sex, national origin or citizenship status, age or handicap. The Contractor agrees to comply with all local, state and federal laws, rules and regulations and Executive orders pertaining to discrimination and equal opportunity requirements, and will require the same of all subcontractors

13.3. Affirmative Action/Nondiscrimination.

13.3.1. Pursuant to CONN. GEN. STAT. § 4a-60, as amended by Public Act 25-168, and as may be amended from time to time, the following are required for every Public Works Contract:

(b) Except as provided in section 10a-151i, every contract to which an awarding agency is a party shall contain the following provisions:

(1) The contractor agrees and warrants that in the performance of the contract such contractor will not discriminate or permit discrimination against any person or group of persons on the grounds of race, color, religious creed, age, marital status, national origin, ancestry, sex, sexual orientation, gender identity or expression, status as a veteran, status as a victim of domestic violence, intellectual disability, mental disability or physical disability, including, but not limited to, blindness, unless it is shown by such contractor that such disability prevents performance of the work involved, in any manner prohibited by the laws of the United States or of the state of Connecticut; and the contractor further agrees to take affirmative action to ensure that applicants with job-related qualifications are employed and that employees are treated when employed without regard to their race, color, religious creed, age, marital status, national origin, ancestry, sex, gender identity or expression, sexual orientation, status as a veteran, status as a victim of domestic violence, intellectual disability, mental disability or physical disability, including, but not limited to, blindness, unless it is shown by such contractor that such disability prevents performance of the work involved;
(2) The contractor agrees, in all solicitations or advertisements for employees placed by or on behalf of the contractor, to state that it is an "affirmative action-equal opportunity employer" in accordance with regulations adopted by the Commission on Human Rights and Opportunities;
(3) The contractor agrees to provide each labor union or representative of workers with which such contractor has a collective bargaining agreement or other contract or understanding and each vendor with which such contractor has a contract or understanding, a notice to be provided by the Commission on Human Rights and Opportunities advising the labor union or workers' representative of the contractor's commitments under this section, and to post copies of the notice in conspicuous places available to employees and applicants for employment;
(4) The contractor agrees to comply with each provision of this section and sections 46a-68e and 46a-68f and with each regulation or relevant order issued by said commission pursuant to sections 46a-56, 46a-68e, 46a-68f and 46a-86; and
(5) The contractor agrees to provide the Commission on Human Rights and Opportunities with such information requested by the commission, and permit access to pertinent books, records

and accounts, concerning the employment practices and procedures of the contractor as relate to the provisions of this section and section 46a-56.

(c) If the contract is a public works contract, the contractor agrees and warrants that he or she will make good faith efforts to employ minority business enterprises as subcontractors and suppliers of materials on such public works project.

(d) Except as provided in section 10a-151i:

(1) Any contractor who has one or more contracts with an awarding agency or who is a party to a public works contract shall include a nondiscrimination affirmation provision certifying that the contractor understands the obligations of this section and will maintain a policy for the duration of the contract to assure that the contract will be performed in compliance with the nondiscrimination requirements of subsection (b) of this section. The authorized signatory of the contract shall demonstrate his or her understanding of this obligation by (A) initialing the nondiscrimination affirmation provision in the body of the contract, (B) providing an affirmative response in the required online bid or response to a proposal question which asks if the contractor understands its obligations, or (C) signing the contract.

(e) Determination of the contractor's good faith efforts shall include, but shall not be limited to, the following factors: The contractor's employment and subcontracting policies, patterns and practices; the timing and value of bids; affirmative advertising, recruitment and training; technical assistance activities and such other reasonable activities or efforts as the Commission on Human Rights and Opportunities may prescribe that are designed to ensure the participation of minority business enterprises in public works projects.

(f) The contractor shall develop and maintain adequate documentation, in a manner prescribed by the Commission on Human Rights and Opportunities, of its good faith efforts.

(g) The contractor shall include the provisions of subsections (b) and (c) of this section in every subcontract or purchase order entered into in order to fulfill any obligation of a contract with the state, and in every subcontract entered into in order to fulfill any obligation of a public works contract, and such provisions shall be binding on a subcontractor, vendor or manufacturer, unless exempted by regulations or orders of the Commission on Human Rights and Opportunities.

13.3.2. Pursuant to CONN. GEN. STAT. § 4a-60a, as amended by Public Act 23-204, and as may be amended from time to time, the following are required for every Public Works Contract:

(a) Every contract to which an awarding agency is a party, every contract for a quasi-public agency project and every public works contract shall contain the following provisions:

(1) The contractor agrees and warrants that in the performance of the contract such contractor will not discriminate or permit discrimination against any person or group of persons on the grounds of sexual orientation, in any manner prohibited by the laws of the United States or of the state of Connecticut, and that employees are treated when employed without regard to their sexual orientation;

(2) The contractor agrees to provide each labor union or representative of workers with which such contractor has a collective bargaining agreement or other contract or understanding and each vendor with which such contractor has a contract or understanding, a notice to be provided by the Commission on Human Rights and Opportunities advising the labor union or workers' representative of the contractor's commitments under this section, and to post copies of the notice in conspicuous places available to employees and applicants for employment;

(3) The contractor agrees to comply with each provision of this section and with each regulation or relevant order issued by said commission pursuant to section 46a-56;

(4) The contractor agrees to provide the Commission on Human Rights and Opportunities with such information requested by the commission, and permit access to pertinent books, records and accounts, concerning the employment practices and procedures of the contractor which relate to the provisions of this section and section 46a-56; and

(5) Nondiscrimination affirmation provision. The Contractor understands the obligations of this section 13.3 and will maintain a policy for the duration of the Contract to assure that the Contract will be performed in conformance with the nondiscrimination requirements of this section 13.3. The authorized signatory of the Contract shall demonstrate his or her understanding of this obligation by either (A) initialing the nondiscrimination affirmation provision in the body of the Contract, [or] (B) providing an affirmative response in the required online bid or response to a proposal question which asks if the Contractor understands its obligations, or (C) signing the Contract.

14. Good Jobs Ordinance

14.1. Conformance With An Ordinance Concerning The Hiring Of Waterbury Residents On Certain Publicly-Funded Construction Projects.

14.1.1 The Contractors and its Subcontractors shall comply with the specific requirements of "An Ordinance Concerning the Hiring of Waterbury Residents on Certain Publicly-Funded Construction Projects" (the "Good Jobs Ordinance"), as may be amended from time to time and as set forth in Chapter

34 of the Code of Ordinances of the City. While the principal provisions of the ordinance are summarized as set forth in paragraphs C-H below, the Contractor does hereby acknowledge that it has reviewed a copy of the Good Jobs Ordinance and that it has read the Ordinance and that Contractor is familiar with the obligations imposed on the Contractor and each Subcontractor by the Good Jobs Ordinance.

14.1.2 Failure of the Contractor or its Subcontractors to comply with the Good Jobs Ordinance shall be a material breach of this Agreement.

14.1.3 This paragraph shall apply to a Covered Project, as that term is defined in the Good Jobs Ordinance, in the City with a value of $500,000.00 or greater and only to the extent permitted by federal and state law.

14.1.4 Definitions. For purposes of this paragraph:

i. "Administrator" shall be defined as it is in the Good Jobs Ordinance.

ii. "Apprentice" shall be defined as it is in the Good Jobs Ordinance.

iii. "Basic Skilled Worker" shall be defined as it is in the Good Jobs Ordinance.

iv. "Contractor" shall be defined as it is in the Good Jobs Ordinance.

v. "Covered Project" shall be defined as it is in the Good Jobs Ordinance.

vi. "Hiring Goal" shall be defined as it is in the Good Jobs Ordinance.

vii. "Resident" shall be defined as it is in the Good Jobs Ordinance.

viii. "Subcontractor" shall be defined as it is in the Good Jobs Ordinance and shall include the Contractor's direct subcontractor providing construction work and all lower tiered (level) providers of construction work.

14.1.5 Hiring Goals. If this Agreement requires the Contractor to perform work on a Covered Project, the Contractor and each Subcontractor shall have as its hiring goals:

i. at least thirty percent (30%) of its total worker hours performed by City Residents, and

ii. at least twenty-five percent (25%) of construction trade jobs shall go to Apprentices and/or Basic Skilled Workers, and

iii. at least seventy percent (70%) of all "new hires" (as that term is defined in the Good Jobs Ordinance) shall be "economically disadvantaged" individuals (as that term is defined in the Good Jobs Ordinance), and

iv. a minimum of five percent (5%) of the construction workforce labor hours will be local resident, minority artisans, and

v. a minimum of five percent (5%) of the construction workforce labor hours will be women, and

vi. a minimum of ten percent (10%) of the total work hours shall be allocated for minorities, or

vii. as may otherwise be required by any superseding Federal or State employment discrimination prohibition laws.

14.1.6 Good Faith Efforts. The Contractor and each Subcontractor shall engage in Good Faith Efforts to comply with the Hiring Goals. For the purposes of this paragraph, the term "Good Faith Efforts" shall have the same meaning as it does in the Good Jobs Ordinance.

The Contractor and each Subcontractor shall individually implement Good Faith efforts to satisfy the Hiring Goals.

14.1.7 Action Plan and Pre-Construction Meeting. Not later than fourteen (14) business days prior to the scheduled commencement date for construction, the Contractor shall submit a written plan-of-action to the City and to the Administrator of the Good Jobs Ordinance defining how the Contractor, and each Subcontractor, shall implement Good Faith Efforts to fulfill the Hiring Goals. Each plan-of-action shall include the anticipated number of job positions required for the Work. Not later than five (5) business day prior to the commencement date of construction, the Contractor must attend a mandatory "pre-construction" meeting with the City to review all plans-of-action and other relevant materials. No construction work shall proceed absent this pre-construction meeting.

14.1.8 Other Contractor Obligations. In addition to the foregoing, the Contractor shall ensure that all Subcontractor contracts and agreements expressly set forth and state as binding obligations therein, subject to appropriate party name change, the above Hiring Goals and Good Faith Efforts. The Contractor shall be accountable for, and liable to the City for, Contractor and each Subcontractor compliance with Hiring Goals and Good Faith efforts.

i. The Contractor shall meet with the Administrator no less than four (4) weeks prior to the commencement of construction on a Covered Project and provide the Administrator with the number of job positions to be created by the project by trade and the qualifications by job tile.

ii. The Contractor shall be required to produce Contractor and Subcontractor documentation that may be required under the provisions of the Good Jobs Ordinance or that the City or the Administrator reasonably believes will assist the City or the Administrator with their evaluation of Hiring Goals and Good Faith Efforts.

iii. The Contractor shall deliver weekly certified payroll records to the City within five (5) working days of the end of each payroll period. Moreover, the Contractor shall require each Subcontractor to create weekly certified payroll records.

iv. The Contractor's and each Subcontractor's payroll records shall include the person-hours, the residential address, race, gender, hiring date, and apprentice (job) classification of all personnel employed under this Agreement and all Contracts and Sub-Contracts thereunder. The Contractor and each Subcontractor shall mark their respective final payroll period records as being final and be signed by an authorized officer or employee.

14.2 Liquidated Damages Applicable To Section 14.1

14.2.1 If the City finds that the Contractor, or a Subcontractor, has failed to achieve Hiring Goals during any five (5) day work period (Monday through Friday), the City shall:

i. issue a written notice to the Contractor specifying the matters constituting such failure and the time period within which Good Faith Efforts documentation must be delivered to the City for its evaluation.

ii. if the Good Faith documentation is not provided or, if provided, it fails to demonstrate compliance with Good Faith Efforts, the Contractor shall, for each failure by the Contractor or a Subcontractor to achieve the Hiring Goals during a full five day work period, pay to the City one thousand dollars ($1,000.00) as liquidated damages.

14.2.2 If the City finds that the Contractor, or a Subcontractor, has failed to deliver weekly certified payroll records to the City within five (5) working days of the end of each payroll period the Contractor shall, as liquidated damages pay one thousand dollars ($1,000.00) to the City for each week of ongoing violation.

14.2.3 The City shall provide the Contractor with an invoice identifying all sums due the City, as liquidated damages, as a result of the Contractor or a Subcontractor's failure to comply with the Good Jobs Ordinance as set forth above.

14.2.4 No portion of any invoice submitted by a Contractor that is subject to liquidated damages shall be paid by the City until such time as all liquidated damages relating to that invoice have been paid to the City.

14.2.5 The foregoing liquidated damages provisions shall be expressly set forth, subject to appropriate party name adjustments, as material provisions in all Contracts that the Contractor has with Subcontractors and the Contractor is obligated hereunder to enforce compliance in such Contracts with Subcontractors.

14.2.6 Any payment of liquidated damages hereunder shall not preclude a later claim, nor any later finding of a breach, or any payment of additional damages related to such later claim.

15. Housing and Urban Development Section 3 Clause. In the event this Contract is funded, in whole or in part, through Housing and Urban Development assistance, 24 C.F.R. §135.38 may apply and the Contractor shall then be required to comply with the following (referred to as the "Section 3 clause"):

15.1. The work to be performed under this Contract is subject to the requirements of Section 3 of the Housing and Urban Development Act of 1968, as amended, 12 U.S.C. § 1701u (Section 3). The purpose of Section 3 is to ensure that employment and other economic opportunities generated by HUD assistance or HUD-assisted Projects covered by Section 3, shall, to the greatest extent feasible, be directed to low and very low-income persons, particularly persons who are recipients of HUD assistance for housing.

15.2. The parties to this Contract agree to comply with HUD's regulations in 24 C.F.R. part 135, which implement Section 3. As evidenced by their execution of this Contract, the parties to this Contract certify that they are under no contractual or other impediment that would prevent them from complying with the part 135 regulations.

15.3. The Contractor agrees to send to each labor organization or representative of workers with which the Contractor has a collective bargaining agreement or other understanding, if any, a notice advising the labor organization or workers' representative of the Contractor's commitments under this Section 3 clause, and will post copies of the notice in conspicuous places at the work site where both employees and applicants for training and employment positions can see the notice. The notice shall describe the Section 3 preference, shall set forth minimum number and job titles subject to hire, availability of apprenticeship and training positions, the qualifications for each; and the

name and location of the person(s) taking applications for each of the positions; and the anticipated date the work shall begin.

15.4. The Contractor agrees to include this Section 3 clause in every subcontract subject to compliance with regulations in 24 C.F.R. part 135, and agrees to take appropriate action, as provided in an applicable provision of the subcontract or in this Section 3 clause, upon a finding that the subcontractor is in violation of the regulations in 24 C.F.R. part 135. The Contractor will not subcontract with any subcontractor where the contractor has notice or knowledge that the subcontractor has been found in violation of the regulations in 24 C.F.R. part 135.

15.5. The Contractor will certify that any vacant employment positions, including training positions, that are filled **(i)** after the Contractor is selected but before the Contract is executed, and **(ii)** with persons other than those to whom the regulations of 24 C.F.R. part 135 require employment opportunities to be directed, were not filled to circumvent the Contractor's obligations under 24 C.F.R. part 135.

15.6. Noncompliance with HUD's regulations in 24 C.F.R. part 135 may result in sanctions, termination of this contract for default, and debarment or suspension from future HUD assisted contracts.

15.7. With respect to work performed in connection with Section 3 covered Indian housing assistance, section 7(b) of the Indian Self-Determination and Education Assistance Act (25 U.S.C. § 450e) also applies to the work to be performed under this Contract. Section 7(b) requires that to the greatest extent feasible **(i)** preference and opportunities for training and employment shall be given to Indians, and **(ii)** preference in the award of contracts and subcontracts shall be given to Indian organizations and Indian-owned Economic Enterprises. Parties to this Contract that are subject to the provisions of Section 3 and section 7(b) agree to comply with Section 3 to the maximum extent feasible, but not in derogation of compliance with section 7(b).

16. Termination.

16.1. Termination of Contract for Cause. If, through any cause, the Contractor shall fail to fulfill in a timely and proper manner its obligations under this Contract, or if the Contractor shall violate any of the covenants, agreements, or stipulations of this Contract, the City shall thereupon have the right to terminate this Contract by either **(i)** giving written notice to the Contractor of a date certain by which Contractor shall, to the written satisfaction of the City, cure after which and without further action by any party, such termination shall automatically become effective and binding, or **(ii)** giving written notice to the Contractor specifying the effective date of such termination at least five (5) business days before the effective date of such termination.

16.1.1 In the event of a termination, all finished or unfinished documents, data, studies, reports, plans, specifications, drawings, supplies, services, etc. prepared

by the Contractor under this Contract shall, at the option of the City, become the City's property, and the Contractor shall be entitled to receive just and equitable compensation for any satisfactory work completed for such.

16.1.2 Notwithstanding the above, the Contractor shall not be relieved of liability to the City for damages sustained by the City by virtue of any breach of this Contract by the Contractor, and the City may withhold any payments to the Contractor for the purpose of setoff until such time as the exact amount of damages due the City from the Contractor is determined.

16.2. Termination for Convenience of the City. The City may terminate this Contract at any time for the convenience of the City, by a notice in writing from the City to the Contractor. If this Contract is terminated by the City as provided herein, the Contractor will be paid an amount which bears the same ratio to the total compensation as the services actually performed bear to the total services of the Contractor covered by this Contract, less payments of compensation previously made.

16.3. Termination for Non-Appropriation or Lack of Funding. The Contractor acknowledges that the City is a municipal corporation and that this Contract is subject to the appropriation and disbursement of funds by the City sufficient for this Contract for each budget year in which this Contract is in effect. The Contractor therefore agrees that the City shall have the right to terminate this Contract in whole or in part without penalty to the City in the event that sufficient funds to provide for City payment(s) under this Contract is not appropriated, not authorized, or not made available, or such funding has been reduced. In the event this Contract is subject, in whole or in part, to the appropriation and disbursement of Federal and/or State funds and those Federal and/or State funds are not appropriated or are not disbursed to the City, the Contractor hereby agrees that the City shall have the right to terminate this Contract in whole or in part without penalty to the City.

16.3.1 Effects of Non-Appropriation. If funds to enable the City to effect continued payment under this Contract are not appropriated, authorized or otherwise made available by law, the City shall have the right to terminate this Contract without penalty at the end of the last period for which funds have been appropriated, authorized or otherwise made available by law by giving written notice of termination to the Contractor.

16.3.2 Effects of Reduced Levels of Funding. If funding is reduced by law, or funds to pay the Contractor for the agreed to level of the products, services and functions to be provided by the Contractor under this Contract are not appropriated, authorized or otherwise made available by law, the City may, upon seven (7) business days written notice to the Contractor, reduce the level of the products, services or functions in such manner and for such periods of time as the City may elect. The charges payable under this Contract shall be equitably

adjusted to reflect such reduced level of products, services or functions and the parties shall be afforded the rights set forth in this Contract.

16.3.3 No Payment for Lost Profits. In no event shall the City be obligated to pay or otherwise compensate the Contractor for any lost or expected future profits.

16.4. Rights Upon Termination.

16.4.1 Termination for Cause. In the event the City terminates this Contract for cause, the Contractor shall relinquish to the City any applicable interest, title and ownership including, but not limited to, perpetual use of any proprietary rights in and to the products and deliverables delivered to, in possession of and properly invoiced and paid for by (except to the extent such invoiced amount is disputed) the City. With regard to third party products, the Contractor shall transfer all licenses which it is permitted to transfer in accordance with the applicable third party license. The City shall have no financial obligation to compensate the Contractor for such terminated products unless payment is otherwise approved by the City prior to such termination. The Contractor shall be liable for costs incurred by the City, including but not limited to reasonable attorney fees and all court awarded fees and costs incurred in terminating this Contract in whole or in part.

16.4.2 Termination for Lack of Funding or Convenience. In the event of termination by the City for lack of funding or convenience, the City shall pay the Contractor for all labor, services, equipment, materials, reports, plans, specifications, drawings, deliverables, incidentals, etc.(including any holdbacks) installed and delivered to the City as of the Termination Date and the Contractor shall relinquish to the City any applicable interest, title and ownership including, but not limited to perpetual use of any proprietary rights in and to said labor, services, equipment, materials, reports, plans, specifications, drawings, deliverables, incidentals, etc. delivered to, in possession of and paid for by the City (except to the extent any invoiced amount is disputed). The Contractor shall be required to exercise commercially reasonable efforts to mitigate damages.

16.4.3 Assumption of Subcontracts. In the event of termination, the City shall have the right to assume, at its option, any and all subcontracts for products, services and functions provided exclusively under this Contract.

16.4.4 Delivery of Documents. In the event of termination, **(i)** the Contractor shall promptly deliver to the City, in a manner reasonably specified by the City, all documents and other tangible items furnished by, or owned, leased, or licensed by, the City, and **(ii)** the City shall pay the Contractor for all services performed and deliverables completed and accepted (pro-rated for deliverables partially completed) prior to the effective date of the termination (except to the extent any invoice amount is disputed).

16.5. Ownership of Instruments of Service. The City acknowledges the Contractor's documents, reports, plans, specifications, drawings, deliverables, etc. created and to be created pursuant to this agreement, including electronic files, are Instruments of Service. Nevertheless, the final Instruments of Service, including, but not limited to architects, engineering, construction, and similar documents, reports, plans, specifications, drawings, deliverables, etc. prepared under this agreement shall become the property of the City upon City payment for that Instrument of Service and the City reserves the right to use the Instruments of Service.

17. Force Majeure. Contractor shall not be held responsible for delays nor be subject to liquidated damages when such delays are caused by conditions beyond its control, including without limitation:

17.1. Acts of God, fire, explosion, epidemic, cyclone, flood, war, strikes, revolution, civil commotion, or acts of public enemies; and

17.2. Change of law, order, proclamation, regulation, ordinance, or governmental requirement.

Upon cessation of work for reason of force majeure delays, Contractor shall use its best efforts to meet the schedule set forth in Section 5 of this Contract.

18. Subcontracting. The Contractor shall not, without the prior written approval of the City's Using Agency, subcontract, in whole or in part, any of the Contractor's services. Any subcontractor so approved shall be required to secure and maintain insurance coverage equal to or better than that required of the Contractor and shall name the City as an additional insured party and said subcontractors shall deliver to the City a certificate of insurance evidencing such coverages. All subcontractors shall comply with all federal, state and local, laws, regulations and ordinances but such requirement shall not relieve the Contractor from its requirement that all services provided hereunder shall comply with all Federal, State and local, laws, regulations and ordinances.

18.1. The Contractor shall be as fully responsible to the City for the acts and omissions of its subcontractors, and of persons either directly or indirectly employed by them, as it is for the acts and omissions of persons directly employed by the Contractor.

18.2. The Contractor is responsible for and shall control activities of its subcontractors, and the subcontractors shall consult and cooperate with one another and other contractors working on the Project site. Each subcontractor shall furnish all necessary information to other subcontractors and shall lay out and install its own work so as to avoid any delays or interferences with the work of another. Any cost for changes, cutting and/or repairing, made necessary by failure to observe the above requirements shall be borne by the Contractor or subcontractor responsible for such failure or neglect.

18.3. The Contractor shall not, without the prior written approval of the City's Using Agency, substitute, terminate, replace or otherwise remove a subcontractor.

19. Assignability. The Contractor shall not assign any interest in this Contract, and shall not transfer any interest in the same (whether by assignment or novation) without the prior written approval of the City; provided, however, that claims for money due or to become due the Contractor from the City under this Contract may be assigned to a bank, trust, company, or other financial institution, or to a Trustee in Bankruptcy, without such approval. Notice of any such assignment or transfer shall be furnished promptly to the City.

20. Audit. The City reserves the right to audit the Contractor's books of account in relation to this Contract any time during the period of this Contract or at any time during the twelve month period immediately following the closing or termination of this Contract. In the event the City elects to make such an audit, the Contractor shall immediately make available to the City all records pertaining to this Contract, including, but not limited to, payroll records, bank statements and canceled checks.

21. Risk of Damage and Loss. The Contractor shall be solely responsible for causing the timely repair to and/or replacement of, City property or item(s) intended to become City property hereunder, where the need for repair or replacement was caused by the Contractor, by someone under the care and/or control of the Contractor, by any subcontractor of the Contractor, or by any shipper or delivery service. The Contractor shall be solely responsible for all costs and expenses, including but not limited to shipping, delivery, insurance, etc, associated with the foregoing repair and replacement obligation. Further, the Contractor shall be solely responsible for securing the City's written acceptance of all completed repairs and replacements required hereunder. The City hereby retains sole discretion to determine whether a repair or a replacement is the proper remedy.

22. Interest of Contractor. The Contractor covenants that it presently has no interest and shall not acquire any interest, direct or indirect, in the Project or any parcel of land therein or any other interest which would conflict in any manner or degree with the performance of its services hereunder. The Contractor further covenants that in the performance of this Contract no person having any such interest shall be employed.

23. Entire Contract. This Contract shall constitute the complete and exclusive statement of the contract between the parties as it relates to this transaction and supersedes all previous agreements and understandings, whether written or oral, relating to such subject matter. Any amendment to this Contract must be in writing and agreed to and executed by the City and the Contractor, and must comply with the City's Charter and Code of Ordinances.

24. Independent Contractor Relationship. The relationship between the City and the Contractor is that of client and independent contractor. No agent, employee, or servant of the Contractor shall be deemed to be an employee, agent or servant of the City. The Contractor shall be solely and entirely responsible for its acts and the acts of its agents, employees, servants and subcontractors during the performance of this agreement. It is the express intention of the

parties hereto, and the Contractor hereby agrees and covenants, that it and any and all third party(ies) and subcontractor(s) retained by the Contractor hereunder is/are not and shall not be deemed an employee of the City of Waterbury, but is/are and shall remain an independent contractor relative to the City and that nothing herein shall be interpreted or construed as creating or establishing the relationship of employer-employee between the City of Waterbury and the Contractor or between the City of Waterbury and any third party(ies) or subcontractor(s). Thus, the Contractor hereby covenants that it, its subcontractor(s) and third party(ies) shall not be entitled to the usual characteristics of employment, such as income tax withholding, F.I.C.A. deductions, pension or retirement privileges, Workers Compensation coverage, health benefits, etc. and that the Contractor shall be solely and entirely responsible for its acts and the acts of its agents, employees, servants, representatives, subcontractors and third party(ies).

25. Severability. Whenever possible, each provision of this Contract shall be interpreted in such a manner as to be effective and valid under applicable law. If any provision of this Contract, however, is held to be prohibited or invalid under applicable law, such provision shall be deemed restated to reflect the original intentions of the parties, as nearly as possible in accordance with applicable law, and if capable of substantial performance, the remaining provisions of this Contract shall be enforced as if this Contract was entered into without an invalid provision. If the ruling and/or controlling principle of law or equity leading to the ruling is subsequently overruled, modified or amended by legislation, judicial or administrative action, then the provision(s) in question as originally set forth in this Contract shall be deemed valid and enforceable to the maximum extent permitted by the new controlling principal of law or equity.

26. Survival. Any provisions of this Contract that impose continuing obligations on the parties shall survive the expiration or termination of this Contract for any reason.

27. Changes in the Project: Change Orders.

27.1. At the sole discretion of the City, a Change Order may be issued solely by the City to modify an existing party obligation set forth in this Contract where the scope of the Change Order is:

27.1.1 within the scope of the original Contract OR is made pursuant to a provision in the original Contract, AND

27.1.2 the Change Order monetary cost is charged solely against those funds encumbered for and at the time the Contract was originally executed by the City, that is those funds set forth in the original Contract as a not to exceed payment amount OR within the original Contract's contingency / allowance / reserve amount (if any is stated therein), AND

27.1.3 The Final Completion Date has not been changed.

27.2. Notwithstanding the foregoing, a Change Order shall not include

27.2.1 an upward adjustment to a Contractor's payment claim, or

27.2.2 a payment increase under any escalation clause set forth in the original Contract, or any Change Order, or any amendment.

27.3. That the work and/or services contemplated are necessary does not, in itself, permit a Change Order. Should the need for a Change Order arise, the request shall be reviewed and approved by the City's Using Agency and any City designated representative(s). To be binding and enforceable, a Change Order shall thereafter be signed by both the Contractor, any City designated representative(s), and a duly authorized representative of the City's Using Agency prior to the Contractor's delivery of the services, etc. contemplated in said Change Order. All Change Orders are governed by the provisions of this Contract. Any contract change NOT fully complying with this Section 27 shall be effectuated solely by an amendment to this Contract complying with Section 38.073 of the City's "Centralized Procurement System" ordinance.

28. Conflicts or Disputes. This Contract represents the concurrence between the City and the Contractor and governs all disputes between them. In the instance of a conflict or dispute over issues not specifically referenced within the Contract, the following documents shall be used as historical documents, without regard to the order of precedence, to resolve such conflicts or disputes, the historical documents are **(i)** the City's aforementioned **RFP No. 8890** and **(ii)** the Contractor's proposal responding to the aforementioned **RFP No. 8890.**

28.1. Procedure. This procedure supersedes all statements to the contrary occurring either in proposals or other prior agreements, oral or written, and all other communications between the parties relating to this subject.

28.2. Presumption. This Contract or any section thereof shall not be construed against any party due to the fact that the Contract or any section thereof was drafted by such party.

29. Disputes; Legal Proceedings; Waiver of Trial by Jury and Continued Performance. The Contractor agrees that its waives a trial by jury as to any and all claims, causes of action or disputes arising out of this Contract or services to be provided pursuant to this Contract. Notwithstanding any such claim, dispute or legal action, the Contractor shall continue to perform services under this Contract in a timely manner, unless otherwise directed by the City.

30. Binding Contract. The City and the Contractor each bind themselves, and their successors, assigns and legal representatives to the other party to this Contract and to the successors, assigns and legal representatives of such other party with respect to all covenants of this Contract.

31. Waiver. Any waiver of the terms and conditions of this Contract by either of the parties hereto shall not be construed to be a waiver of any other term or condition of this Contract.

32. Governing Laws. This Contract, its terms and conditions and any claims arising there from shall be governed by the laws of the State of Connecticut.

33. Notice. Except as otherwise specifically prohibited in this Contract, whenever under this Contract approvals, authorizations, determinations, notices, satisfactions or waivers are required or permitted, such items shall be effective and valid only when given in writing signed by a duly authorized officer of the City or the Contractor, and delivered in hand or sent by mail, postage prepaid, to the party to whom it is directed, which until changed by written notice, are as follows:

Contractor: CIPULLY TREE SERVICE, LLC
35 ATWATER PLACE
CHESHIRE, CT 06410

City: City of Waterbury
c/o Public Works Department
185 South Main Street, 5th Floor
Waterbury, CT 06706

With copy to:

City of Waterbury
Office of the Corporation Counsel
City Hall Municipal Building - 3rd Floor
235 Grand Street
Waterbury, CT 06702

34. City Code of Ordinances, Ethics and Conflict of Interest Code, Provisions. The Person (the term "Person" shall herein be as defined in Section 38 of the City's Code of Ordinances) supplying the labor, services, equipment, materials, reports, plans, specifications, drawings, deliverables, incidentals, etc. under this Contract shall comply with all applicable Federal, State and Municipal statutes, regulations, charters, ordinances, rules, etc, whether or not they are expressly stated in this Contract, including but not limited to the following:

34.1. It shall be a material breach of this Contract, and, except as may be permitted by regulations or rulings of the City of Waterbury Board of Ethics it shall be a violation of the City's Code of Ordinances, for any Public Official, City Employee or Member of a Board or Commission who is participating directly or indirectly in the procurement process as set forth in the City's Code of Ordinances, including those participating in exempt transactions, to become or be the employee of any person contracting with the governmental body by whom the Official, Employee, or Board or Commission member is employed or is a member.

34.2. It shall be a material breach of this Contract, and it shall be a violation of the City's Code of Ordinances for any Person to offer, give, or agree to give any current or former

Public Official, Employee or Member of a Board or Commission, or for such current or former Public Official, Employee or Member of a Board or Commission to solicit, demand, accept or agree to accept from another Person, a gratuity or an offer of employment in connection with any: decision; approval; disapproval; recommendation; preparation of any part of a program requirement or a requisition; influencing the content of any specification or procurement standard; or rendering of advice, investigation, auditing, or in any other advisory capacity in any proceeding or application, request for ruling, determination, claim or controversy, or other particular matter, pertaining to any program requirement or a Contract or Purchase Order, or to any solicitation or proposal therefore.

34.3. It shall be a material breach of this Contract and it shall be a violation of the City's Code of Ordinances for any payment, Gratuity, or offer of employment to be made as an inducement for the award of a subcontract or order, by or on behalf of a subcontractor, the prime Contractor or higher tier subcontractor or any Person associated therewith, under a Contract or Purchase Order to the City.

34.4. The value of anything transferred or received in violation of the City's Charter, Code of Ordinances, and/or regulations promulgated there under, by any Person subject to said Charter and/or Ordinances may be recovered by the City.

34.5. Upon a showing that a subcontractor made a kickback to the City, a prime Contractor or a higher tier subcontractor in connection with the award of a subcontract or order there under, it shall be conclusively presumed that the amount thereof was included in the price of the subcontract or order and ultimately borne by the City and will be recoverable hereunder from the recipient. In addition, said value may also be recovered from the subcontractor making such kickbacks. Recovery from one offending party shall not preclude recovery from other offending parties.

34.6. It shall be a material breach of this Contract and it shall be a violation of the City's Code of Ordinances for a Person to be retained, or to retain a Person, to solicit or secure a contract with the City upon an agreement or understanding for a commission, percentage, brokerage, or contingent fee; and every Person, before being awarded a City Contract, shall deliver to the City, on a City authored form, a representation that such Person has not retained anyone in violation of this subsection 34.6, the failure to deliver said form being a material breach of this Contract and a violation of the City's Code of Ordinances. Note, however, this subsection 34.6 shall not apply to full-time Employees who, as a condition of their employment, may be entitled to bonuses or other fees in accordance with their employment relationship.

34.7. The Person hereby expressly represents that he/she/it has complied with those sections of the City's Code of Ordinances requiring that said Person has **(i)** delivered to the City an affidavit, on a City authored form, stating that the Person and its affiliates have no delinquent taxes or other financial obligations owned to the City; **(ii)** filed the City authored financial disclosure statement form as set forth in the City's Code of

Ordinances regarding disclosure of financial interests; **(iii)** delivered to the City a written acknowledgement, on a City authored form, evidencing receipt of a copy of the "Ethics and Conflict of Interest" ordinance for the City of Waterbury and hereby expressly represents that said Person is in full compliance with the entirety of said Code of Ordinances; and **(iv)** filed a current list of all taxable personal and real property as required by the State of Connecticut General Statutes. Any violation of this subsection 34.7 shall be deemed a material breach of this Contract and shall be a violation of the City's Code of Ordinances.

34.8. The definitions set forth in the City's Code of Ordinances shall be the primary source for interpretation of the forgoing subsections 34.1-34.7.

34.9. The Contractor is hereby charged with the requirement that it shall have knowledge of, and shall fully comply with, all relevant provisions of the City's Charter and all relevant provisions of the City's Code of Ordinances, including without limitation Chapters 93, titled "Discriminatory Practices", Chapter 38 titled "Centralized Procurement System", and Chapter 39 titled "Ethics and Conflict of Interest", of said Code as may be amended from time to time.

34.10. The Contractor hereby acknowledges receipt of a copy of the Chapters 38 and 39 of City's Ordinance regarding Procurement, Ethics, and Conflicts of Interest and has familiarized itself with said Code and hereby agrees to adhere to said Code. The text of Chapters 38 and 39 of said Code may be obtained from the Office of the City Clerk of the City and on the internet at the City Clerk's web site: *http://www.waterburyct.org/content/458/539/default.aspx* [click link titled "The City of Waterbury Code of Ordinances *Passed 8/24/2009*". For Chapter 38, click on "TITLE III: ADMINISTRATION", then click on "CHAPTER 38: CENTRALIZED PROCUREMENT SYSTEM". For Chapter 39, click on "TITLE III: ADMINISTRATION", then click on "CHAPTER 39: ETHICS AND CONFLICTS OF INTEREST"].

34.11. The Contractor is hereby charged with the requirement that it shall have knowledge of, and shall fully comply with, the City's Ordinance Sections 34.15 through 34.99 entitled, "Ordinance Concerning the Hiring of Waterbury Residents on Certain Publicly-Funded Construction Projects," and the State of Connecticut Legislature's Special Act No. 01-1.

34.12. Every Person who conducts business with, contracts, with or provides commodities or services to the City, is charged with notice of the extent of the powers and authority, and the limitations thereon, of the Public Officials and Employees of the City, as set forth in the charter of the City, the Code of Ordinances and any Regulations or Policies pertaining thereto. In particular, and without implying any limitation as to its applicability, it applies to all Persons who participate in the procedures pertaining to the Centralized Procurement System as set forth in Chapter 38, and the Ethics and Conflict of Interest provisions set forth in Chapter 39 of the Code of Ordinances.

34.13. INTEREST OF CITY OFFICIALS. No member of the governing body of the City, and no other officer, employee, or agent of the City who exercises any functions or responsibilities in connection with the carrying out of the project, to which this agreement pertains, shall have any personal interest, direct or indirect, in this agreement.

34.14. PROHIBITION AGAINST CONTINGENCY FEES. The Contractor hereby represents that it has not retained anyone to solicit or secure a contract with the City upon an agreement or understanding for a commission, percentage, brokerage or contingency fee.

34.15. FREEDOM OF INFORMATION ACT NOTICE. Pursuant to State statute, in the event the total compensation payable to the Contractor set forth in Section 6 herein is greater than $2,500,000.00, the City is entitled to receive a copy of any and all Contractor records and files related to the performance of this Contract and those records and files are subject to the Freedom of Information Act ("the Act") and may be disclosed by the City pursuant to the Act.

[Signature page follows]

IN WITNESS WHEREOF, the parties hereto execute this Contract on the dates signed below.

WITNESSES:

Sign:_____
Print name:

Sign:_____
Print name:

CITY OF WATERBURY

By:_____
Paul K. Pernerewski, Jr.
Mayor

Date: _____

WITNESSES:

Sign:_____
Print name:

Sign:_____
Print name:

CIPULLY TREE SERVICE, LLC

By:_____
Print name:
Its _____

Date: _____

ATTACHMENT A

Attachment A shall consist of the following, which are attached hereto, are acknowledged by the Contractor as having been received, or otherwise hereby incorporated by reference as noted below, and all are made a part hereof:

1.1.1 **RFP Number 8890** (acknowledged by the Contractor as having been received and incorporated by reference);

1.1.2 **Addendum #1 to RFP Number 8890**, dated August 25, 2026 and consisting of 8 pages (attached hereto);

1.1.3 Contractor's Proposal, consisting of 24 pages, submitted in response to **RFP Number 8890**, and Contractor's Price Proposal, dated August 28, 2026 (signed August 31, 2026) and consisting of 3 pages (all attached hereto);

1.1.4 Certificates of Insurance (attached hereto);

1.1.5 Performance Bond and Payment Bond (incorporated by reference);

1.1.6 Special Conditions (Article 1 – Article 22) consisting of 6 pages (attached hereto);

1.1.7 General Conditions (Article 1 – Article 113) consisting of 35 pages (attached hereto);

1.1.8 Technical Specifications, RFP Attachment F, consisting of 5 pages (attached hereto);

1.1.9 Annual Statement of Financial Interests; Disclosure and Affidavit Re: Outstanding Obligations to the City; Debarment Certification; Corporate Resolution, Non-Collusion Affidavit (incorporated by reference);

1.1.10 Any and all amendment(s) and Change Orders issued by the City after execution of Contract (incorporated by reference);

1.1.11 All applicable Federal, State and local statutes, regulations, charter and ordinances (incorporated by reference); and

1.1.12 All permits (including, but not limited to, City of Waterbury Building permit(s)) and licenses (incorporated by reference).

Attachment B-1

"Non-Discrimination Contract Language", dated REV.07012026, attached hereto and incorporated herein.

MAUREEN McCAULEY
ASSISTANT DIRECTOR OF PURCHASING

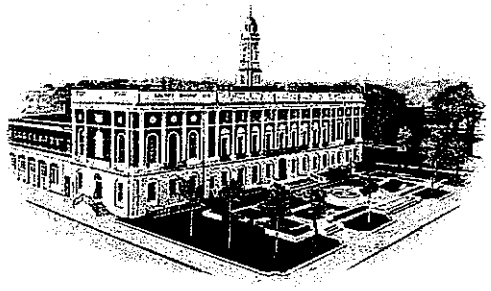

OFFICE OF THE DIRECTOR OF PURCHASING
THE CITY OF WATERBURY
CONNECTICUT

ADDENDUM #1

August 25, 2026

RFP 8890 On-Call Tree Services

Please Be Advised:
1. All Proposers are hereby notified that this Addendum No. 1 shall be part of the Contract Documents for the above referenced **RFP #8890**.
2. This Addendum amends or supplements the RFP Documents. All provisions which are not so amended or supplemented remain in full force and effect.
3. Each Proposer shall be responsible for determining that it has received all Addenda issued and shall acknowledge receipt of all Addenda on the Addendum Acknowledgment Form (see Attachment C). Failure to do so may subject the Proposer to disqualification.

The Contract Documents are hereby amended as follows:

Please refer to the questions and answers below.

Question: Per RFP, "The City of Waterbury is seeking proposals to provide the City various types of tree service including routine tree pruning including ornamental trees, scheduled removal of trees and/or limbs and emergency tree work. Tree work would be within the City of Waterbury property and Rights of Ways and may include Parks, Golf Courses and Public Buildings. Please see Attachment E, Technical Specifications." However, Attachment E is the actual Request for Proposal form. Please advise if there should be an additional document. / Technical Specifications / Attachment E The RFP references Attachment E as containing the Technical Specifications; however, Attachment E in the solicitation package appears to contain the Price Proposal forms. Is there a separate Technical Specifications document that should have been included with the RFP?
Answer: Technical Specifications attached.

Question: If there was a previously awarded contract for this, could you please provide the bid tabulation along with expended amount utilized during that contracted period.
Answer: Not available.

235 GRAND STREET • WATERBURY, CONNECTICUT 06702 • PHONE: (203) 574-6749 • FAX: (203) 597-3437

Question: Prevailing Wage / Pricing Adjustment The RFP establishes fixed regular and emergency hourly rates, while the Contract provides that prevailing wage requirements may apply depending upon the funding and nature of individual work assignments. When a Task Order is subject to a prevailing wage or other mandated wage determination not provided with the RFP, will the Contractor be permitted to adjust its contract rates to account for the applicable wage and fringe requirements?
Answer: No work to be performed under this contract will be for amounts that would require prevailing wages.

Question: Should bidders assume prevailing wage and certified-payroll requirements apply to all work when establishing Attachment E rates? If only certain Task Orders will be subject to prevailing wage, LoCIP, TAR, CHRO or Good Jobs requirements, will the contractor be permitted to adjust rates for those Task Orders to account for the applicable wage and compliance requirements?
Answer: No work to be performed under this contract will be for amounts that would require prevailing wage rates, LoCIP, TAR, CHRO, or Good Jobs Ordinance requirements.

Question: Emergency Response Time The RFP contemplates emergency tree work and 24/7 availability. Is there a required maximum response or mobilization time following notification by the City?
Answer: 2 Hours.

Question: Please define an Emergency Call, required response time, whether a crew must be continuously available/on standby, minimum billable call-out hours, and whether nights, weekends and holidays automatically qualify for Emergency Rates.
Answer: 2 Hour response time. Will not ask companies to be on Standby. Nights, weekends and Holidays qualify for emergency rates.

Question: Work near electrical conductors How will work near electrical conductors be handled? I see no mention of EHAP or MAD in this document.
Answer: It is the vendors responsibility to comply with all safety requirements, including, but not limited to, contracting utilities as needed.

Question: Is there a budget number for these operations that you can share?
Answer: No.

Question:. Please provide the City's historical annual expenditures, crew hours, emergency hours and approximate number of tree removals/pruning assignments for the prior 2-3 years.
Answer:1 year of having On Call Tree Services. Approximately 15 hours of emergency work and approximately 50+ hours of non-emergency work.

Question: How will work be allocated among multiple awardees: rotation, availability, lowest rate, quotation by task, or City discretion?
Answer: City's discretion.

Question: Please define responsibility for traffic control and police details. If police details are required by the City, will those costs be paid directly by the City or reimbursed separately rather than included in the contractor's hourly rates?
Answer: Cost to be paid directly by City.

Question: Please clarify how the City will establish the deadline against which delay damages would be measured, and confirm that any such deadline will be defined and agreed upon within each individual Task Order before work begins.
Answer: Deadline with each task order shall be made and agreed upon by both the City and the vendor prior to work starting.

Question: Please clarify when Performance and Payment Bonds will be required and whether bond premiums may be separately added to a Task Order rather than included in the base hourly rates?
Answer: Jobs over $50,000 require a Performance and Payment Bond. We anticipate no job will reach that threshold.

Thank you.

Maureen McCauley
Assistant Director of Purchasing – City of Waterbury

Attachment F Document

- TECHNICAL SPECIFICATIONS

REQUEST FOR PROPOSAL #8890
BY
THE CITY OF WATERBURY
Public Works Department
On-Call Tree Services

TECHNICAL SPECIFICATIONS

GENERAL REQUIREMENTS:

1. The selected vendor(s) must be a tree expert licensed as an "arborist" by the State of Connecticut (CT General Statutes Sec. 23-61a). The license number must be current and shall be included with the response documents.
2. All work shall be initiated by the Department of Public Works Director or his designee, Tree Warden, or Golf Course Superintendent with the request for a Task Order proposal.
3. A purchase order must be issued in advance to perform any and all work. All work will be inspected by City designated staff and upon their approval the vendor shall issue an invoice.
4. All work to be performed relating to this RFP is on City roads and properties. It will be the vendor's responsibility to maintain traffic control on all roads at all times. Should it become necessary to close off a road or sidewalk completely the vendor must obtain approval through the City of Waterbury Engineering Department. Fees for the application to close a road and/or sidewalk shall be waived.
5. Traffic Control must be provided by the vendor. The Vendor must provide traffic control signage and appropriately garbed flagmen in accordance with the most up to date Manual on Uniform Traffic Control. If police traffic control is required costs will be borne by the Vendor.
6. All pricing relating to this RFP must remain in effect and firm fixed provided in the RFP and through the term of any executed contract.
7. The selected vendor(s) must be on call 24 hours a day, 7 days a week, year round for emergency operations.
8. Response time shall be no greater than two (2) hours after contacted by City of Waterbury Staff.
9. In the event of severe weather, the vendor must make a crew available for emergency tree work. A crew will be defined as: one bucket truck, one chip truck, one chipper, one crew chief, one climber, and at least one ground person. Vendor shall be contacted by City of Waterbury Staff based on local weather forecasts. Severe weather shall include, but not be limited to hurricanes, snow and ice storms, thunderstorms or tornadoes. Any emergency work shall be billed on the hourly rate noted on the bid proposal form for emergency work.
10. The City reserves the right to inspect all equipment of the vendor(s) it is considering to award prior to making awarding the required services.

TREE PRUNING SPECIFICATIONS:

- All work will be billed at an hourly rate for this service.

- Trees must be trimmed to create a well-maintained ornamental appearance whenever possible and must adhere to all American National Standards Institute (ANSI) A300 Standards and practices.
- Maximum tree trimming-crown reduction, pruning top and sides to lighten and balance, removing deadwood and crossed branches. This pruning is to provide for public safety and the general health of the trees. However, at no time should reduction exceed ¼ of the overall size of any tree unless specified by the Director of Public Works, Tree Warden, or Superintendent of Golf Courses. The finished trees shall have a symmetrical and aesthetic form with the weight evenly distributed
- In order to shorten the length of limbs, use the thin to lateral methods. Methods of pruning which may be called Topping, Heading Back, or Lions Tailing shall not be used.
- To lighten end weight where such overburden appears likely to cause breakage of limbs four inches (4") or more in diameter, the only pruning method to be used is drop crotch. Remove cross limbs and epicormics growth (suckers) as required. Pruners will be used to complete final trimming processes. Any exceptions will be at the discretion of the Director of Public Works, Tree Warden or Superintendent of Golf Courses. All trimming will be done in a manner which will not injure or scar the tree.
- Final pruning cuts shall be made without leaving a stub. They shall be made in a manner to favor the earliest covering of the wound by callus growth. This requires that the wound be as small as possible and the cut be reasonably flush outside the branch bark ridge area and that the cambium tissues at the edge of the cut be alive and health. Trees are to be pruned at various locations around Waterbury. This work consists of safety pruning all dead wood and low branches on trees, removing major dead wood, diseased wood, stubs, and any weak leaders that may be considered dangerous.
- The vendor must be able to evaluate tree conditions and hazards and will be responsible to inform the City of any invasive insect species and pests i.e. Asian Long Horned Beetle, Winter Moth or Emerald Ash Borer encountered during any pruning or takedown operation.
- When dead wood trimming, all dead branches one (1") inch in diameter or greater at the trunk must be removed. All trees with branches over a roadway shall be pruned to provide fifteen (15') feet of clearance at the curb. The contractor must have a bucket truck with a minimum working height of 60' (sixty feet) from the bottom of the basket to the ground. The contractor will utilize equipment in good operating condition with adequate suitable equipment to perform the necessary operations. Equipment required may include a limb/brush chipper, a whole tree chipper capable of chipping logs up to 14 inches in diameter, and chip trucks. All equipment must be in good working order when reporting for work, with sharpened blades on all saws. While on an hourly rate no sharpening will be performed during the hours of operation. Vendor must provide sufficient extra sharpened blades. At times when the equipment is non-operable no payment will be made by the City of Waterbury
- It is required that hourly crew work time be verified by the Director of Public Works, Town Tree Warden and/or the Golf Course Superintendent. The

Contractor must insure that these persons are notified that the work is occurring.

- The City shall not pay for un-verified or un-approved crew times.

TREE REMOVAL SPECIFICATIONS

- This work will be billed at an hourly rate. Due to the various considerations that must be taken into account with a tree removal / take down, including variations in overall canopy volume, potential secondary involvement with other trees or methods of removal due to proximity of structures etc.; tree removal (take down) will billed at an hourly rate and will be on a case by case basis.
- The Contractor shall furnish all materials, equipment, tools, supplies, labor and transportation including fuel and power to perform all of the work necessary for the removal of trees designated during the life of the contract. Stumps must be flush cut to the ground. All grass and pavement areas are to be blown clean of all debris with a leaf blower.
- As much as is feasible, tree removal work will be scheduled for an eight (8) hour day between the hours of 7:30 a.m. and 4:00 p.m. The tree removal crew (minimum 3 men) will include a qualified tree man ("crew chief") and at least one member with the ability (and the proper equipment) to climb the trees in order to accomplish the work. The contractor must have a bucket truck with a minimum working height of 60' (sixty feet) from the bottom of the basket to the ground. The contractor will utilize equipment in good operating condition with adequate suitable equipment to perform the necessary operations. Equipment required may include a limb/brush chipper, a whole tree chipper capable of chipping logs up to 14 inches in diameter, and chip trucks. All equipment must be in good working order when reporting for work, with sharpened blades on all saws. While on an hourly rate no sharpening will be performed during the hours of operation. Vendor must provide sufficient extra sharpened blades. At times when the equipment is non-operable no payment will be made by the City.

EMERGENCY CLEARING SERVICES

- This work will be billed at an hourly rate.
- The Contractor will be responsible for the clearing of any tree or tree debris that present road obstructions

as well as all identified aerial hazards over City roadways during and immediately following an inclement or adverse weather events as part of "Make Safe" operations.

- All materials will be cut and put off the curb line in order to re-gain safe passage on public roadways as soon as possible.
- The emergency services crew will include a qualified tree man ("crew chief").
- The City may require the Contractor to provide additional crews when deemed necessary to preserve public safety.

REQUEST FOR PROPOSAL
#8890
BY
THE CITY OF WATERBURY
Public Works Department
On-Call Tree Services

1. Proposer Information: Please provide the following information:
    a. Firm Name: Cipully Tree Service, LLC
    b. Permanent main office address: 35 Atwater Place, Cheshire, CT 06410
    c. Date firm organized: 2/9/18
    d. Legal Form of ownership: Limited liability company
    e. How many years have you been engaged in services you provide under your present name? 8+ years
    f. Names, titles, reporting relationships, and background and experience of the principal members of your organization, including officers: Kyle Cipully, Owner
2. Experience, Expertise and Capabilities
    a. Philosophy Statement and Business Focus. A statement of the proposer's philosophy and approach in undertaking the services of the nature outlined in the RFP, as well as a description of its primary business focus.
        i. Our primary business focus is tree removal, tree pruning, plant healthcare, and emergency services for all of the above as well. We recycle all organic waste that is removed from every jobsite. We pride ourselves on our reputation and high safety standards in completing each and every job.
    b. Summary of Relevant Experience. A listing of all projects that the proposer has completed within the last three (3) years must be provided, as well as all projects of a similar nature to those included in the Scope of Services in this RFP. The following information shall be provided for each organization listed under this subsection:
        i. Organization name and the name, title, address, and telephone number of a responsible contact person.
        ii. Nature of services provided and dates services started and actually completed. Please indicate, for each assignment, if it was completed within the original contract timeframe and budget. If not, please explain.
        iii. For each project done for a municipality or other government agency, please indicate the gross cost of the agreement.

PROJECT LIST:

- Town of Naugatuck: Tree Removal/Tree Pruning at various locations
    - Point of Contact: Michelle Taylor, Administrative; (203) 720-7071
    - Completed throughout 2024-2025, two-year project intermittently

    - Completed within original contract timeframe and for original cost provided to the Town
    - Gross cost of agreement: $21,600
- Town of Madison: Clearing of Neck River Flood Water Diversion
    - John Iennaco PE, CFM (Professional Engineer license with a Certified Floodplain Manager); (203) 245-5660
    - Began March 2026 and completed two weeks later same month
    - Completed within original contract timeframe and for original cost provided to the Town
    - Gross cost of agreement: $36,000
- Town of Killingly: Tree removal for high school access road
    - Tammy LaPlante, Admin for Engineering/WPCF; (860) 779-5360
    - Began August 26th and project still is in process.
    - Gross cost of agreement: $34,690
- Roma Construction: Vista Point Clearing Project, Groton, CT
    - Cale Carnot, Project Manager; (860) 996-8766
    - Began last week of July 2026 and finished August 24
    - Completed within original contract timeframe and for original cost provided
- Lovley Development: Land clearing on Lazy Lane, Southington, CT
    - Mark Lovley, Owner; (860) 302-2440
    - Began September 2025 and ended January 2026 (two phase project)
    - Completed within original contract timeframe and for original cost provided

Additionally, please list ant contracts or purchase orders in the last three (3) years between the proposer and any agency of the City of Waterbury – N/A

c. Personnel Listing. A complete listing of the staff identified in the work plan by job classification, along with their resumes. Each resume shall include the individual's qualifications and experience in the subject area.
    i. Chris Eustis – Arborist & Plant healthcare specialist. 25 years' experience in the area. Prior salesman and arborist for Wallingford Tree Service.
    ii. Mike Swift – Foreman & Crew Leader. 35 years' experience in the tree care industry. Has been working with Cipully Tree for seven years. Prior owner of All About Trees company.
    iii. Luis – Climber. 12 years' experience in the tree care industry. 2.5 years working with Cipully Tree. Prior climber at Davis Tree.
    iv. Joe D'Amato – Groundsman/flag man. 15 years' experience in the industry. Working with Cipully Tree for 12 years.

d. Conflict of Interest. Disclose any current (within the last 3 years) business, financial, personal, or other types of relationships which may pose a conflict of interest – N/A

3. Statement of Qualifications and Work Plan

a. Qualifications. Please describe your firm's qualifications, experience and capabilities as they pertain to each of the areas of qualifications listed, as well as those of the personnel to be assigned to this project.
   i. **Must have the proper certificate of liability insurance that the City of Waterbury requires** – SEE ATTACHED
   ii. **Must adhere to the terms and conditions set forth within the scope of services** – Pricing will be honored as noted in Attachment E.
   iii. **Experience, expertise and technical competence in regards to providing the types of, or similar services, as those set forth in the scope of services, over the past 5 years** – Owner and crew members/personnel listed within this RFP all have years of experience performing tree removal, pruning, and emergency work. See above Section 2(c).
   iv. **Demonstrated ability to provide required services and perform the work in a timely and efficient manner** – Cipully Tree has not defaulted on a contract throughout our years in business. We have worked for and with multiple municipalities as well as builders and have completed projects within timeframe and budget noted each time.
   v. **Demonstrated experience with public sector projects and in preparing requisitions and invoices for payment and reimbursement to Local, State and Federal Agencies** – Yes, see Project List above noting work with prior municipalities.
   vi. Professional background, experience, qualifications and adequacy of staff to be assigned to this project – See above Section 2(c).
   vii. **If utilizing sub-consultants (where permitted), demonstrate that the team's members have worked together on previous projects and that the subconsultants have the requisite expertise and experience.** – N/A
   viii. **Must have experience working on Golf Courses, in and around sensitive areas as Greens, Tees and Fairways** – Completed major course upgrades at Wallingford Country Club in 2025.

b. Work Plan. Please describe the approach that would be generally followed in undertaking the Scope of Services in Section C above.
   i. Perform scheduled pruning as well as removal of trees for the City. Respond immediately to requests for emergency services related to tree removal/health. We have performed work on Wallingford Country Club which consisted of major course upgrades.
   ii. Regarding the Cost Schedule portion of this RFP, it is tough to determine standard pricing for each above scenario (i.e. pruning, emergency tree removal, golf course upgrades).
   iii. A standard 8-hour pruning day would total $2,720. An emergency 8-hour pruning day would total $3,160. This would be for a three-man crew (crew chief, climber, and groundsmen) with 10 cubic yard box truck & chipper and 60-foot aerial lift.
   iv. A standard 8-hour ground cleanup would be $1,920. An emergency 8-hour ground cleanup would total $2,400. This would be for a two-man

crew (crew chief and groundsman) as well as a 10 cubic yard box truck & chipper.

c. Services Expected of the City. Identify the nature and scope of the services that would be generally required of the City in undertaking these projects.
    i. If traffic control is needed, the City will be responsible for any costs inquired associated with same.
    ii. The City must provide 36-hour advance notice for regularly scheduled pruning or removal of trees (this does not include emergency work outlined in this RFP).

4. Cost Schedule. Proposals shall include a single price for work to be performed in accordance with this RFP, inclusive of all personnel and non-personnel expenses. This price should encompass the entire Scope of Services in this RFP. The City reserves the right to negotiate costs, scope of services, and key personnel based on provider proposals. In order for the City to evaluate the proposed cost, proposers must include for each element in the Work Plan outlined in Section I.3.b. above, the staff, hours, hourly rates and the total cost. Include details generally associated with non-personnel costs as an additional cost section.

ADDITIONAL COST:

- Spider lift:
    - Standard hourly rate: $120 per hour
    - Emergency rate: $120 per hour
- Log truck operation:
    - Standard hourly rate: $225 per hour
    - Emergency rate: $225 per hour
- High-capacity chip truck:
    - Standard hourly rate: $120 per hour
    - Emergency hourly rate: $120

Since the City may desire to consider the proposer's experience, qualifications, statement of work, and other aspects of the RFP prior to the Cost Proposal, the Cost Proposal shall be sealed in a separate envelope marked "Confidential: Cost Proposal".

5. Information Regarding: Failure to Complete Work, Default and Litigation.

Please respond to the following questions:

a. **Have you ever failed to complete any work awarded to you? If so, where and why?** – No
b. **Have you ever defaulted on a contract? If so, where and why?** – No
c. **Is there any pending litigation which could affect your organization's ability to perform this agreement? If so, please describe.** – No
d. **Has your firm ever had a contract terminated for cause within the past five years? If yes, provide details.** – No

e. **Has your firm been named in a lawsuit related to errors and omissions within the past five years? If yes, provide details.** – No
f. **During the past seven years, has your firm ever filed for protection under the Federal bankruptcy laws? If yes, provide details.** – No
g. **Are there any other factors or information that could affect your firm's ability to provide the services being sought about which the City should be aware?** – No

6. Exceptions and Alternatives. Proposers wishing to take any exceptions to any requirement in the RFP shall state and explain such exceptions. The City may accept proposals which take exception to any requirements in this RFP, or which offer any alternative to a requirement herein, as well as consider such exceptions and alternatives in evaluating responses. Any exception or alternative must be clearly delineated and cannot materially affect the substance of this Request for Proposals.
    a. If traffic control is needed, the City will be responsible for any costs inquired associated with same.
    b. If an emergency call occurs outside of normal business hours (normal business hours are 8 am to 5 pm on Monday through Friday), there is an 8-hour minimum charge.
    c. Travel time to and from jobsites is billable (shop location is 1211 Old Colony Road, Wallingford, CT 06492).

Attachment A Documents

- ANNUAL STATEMENT OF FINANCIAL INTEREST
- DEBARMENT CERTIFICATION
- CITY OF WATERBURY DISCLOSURE OF OUTSTANDING OBLIGATIONS

FILL IN AND RETURN WITH YOUR SUBMISSION

CITY OF WATERBURY
ANNUAL STATEMENT OF FINANCIAL INTERESTS (Calendar Year 202__)
Persons or Entities Conducting Business with the City

I. Outstanding Purchase Orders of Contracts with the City

A. Contracts

No Contracts with the City ☑

(Service or Commodity Covered by Contract)

(Term of Contract)

(Service or Commodity Covered by Contract)

(Term of Contract)

(Service or Commodity Covered by Contract)

(Term of Contract)

FILL IN AND RETURN WITH YOUR SUBMISSION

CITY OF WATERBURY
ANNUAL STATEMENT OF FINANCIAL INTERESTS (Calendar Year 202__)
Persons or Entities Conducting Business with the City

B. Purchase Order(s).

No Purchase Order(s) with the City ☑

(Service or Commodity Covered by Purchase Order)

(Date of Purchase Order)

(Service or Commodity Covered by Purchase Order)

(Date of Purchase Order)

(Service or Commodity Covered by Purchase Order)

(Date of Purchase Order)

FILL IN AND RETURN WITH YOUR SUBMISSION

CITY OF WATERBURY
ANNUAL STATEMENT OF FINANCIAL INTERESTS (Calendar Year 202__)
Persons or Entities Conducting Business with the City

II. Financial Interest Disclosure

(Public Officials, Employees or Board and Commission Members with interest in Person or Entity Conducting Business with the City)

No Officials, Employees or Board and Commission Members with Financial Interest ☑

(Name of Official)

(Position with City)

(Nature of Business Interest)
(e.g. Owner, Director etc...)

Interest Held By:
Self ☐ Spouse ☐ Joint ☐ Child ☐

(Name of Official)

(Position with City)

(Nature of Business Interest)
(e.g. Owner, Director etc...)

Interest Held By:
Self ☐ Spouse ☐ Joint ☐ Child ☐

FILL IN AND RETURN WITH YOUR SUBMISSION

1. I certify that this Annual Statement of Financial Interests is a complete and accurate statement of those matter required to be disclosed by me pursuant to §39.061 of the Code of Ordinances.

2. I understand that if I fail to file an Annual Statement (or amendment thereto) or an inaccurate Statement I will be in violation with Chapter 39 of the Code of Ordinance and, thereby, subject to the remedies set forth in §§38.71 and 39.101 of said Code.

3. I understand that I must file with the City Clerk, within fifteen (15) days following any reportable occurrence, any amendments to the Annual Statement.

I have read and agree to the above certification.

Cipully Tree Service, LLC
(Name of Company, if applicable)

Signature of Individual (or Authorized Signatory) — Date: 8/31/26

Kyle Cipully, owner
Print or Type Name and Title (if applicable)

DELIVERED | By Mail ☐ Hand-Delivered ☑

FILL IN AND RETURN WITH YOUR SUBMISSION

City of Waterbury Certification
Regarding
Debarment, Suspension, Ineligibility and Exclusion

If the transaction is Federally funded, in whole or in part (including pass through grants to state and/or municipal government), this certification is required by the regulations implementing one or more Presidential Executive Orders. If this transaction is funded by the State of Connecticut, in whole or in part, this certification is required in accordance with one or more State of Connecticut general statutes.

1. By signing and submitting the attached proposal and/or this document, the prospective lower tier participant, vendor, or contractor is providing the certification set out below.
2. The certification in this clause is a material representation of fact upon which reliance was placed when this transaction was entered into. If it is later determined that the prospective lower tier participant, vendor, or contractor knowingly rendered an erroneous certification, in addition to other remedies available to the Federal , State, or City government, the department or agency with which this transaction originated may pursue available remedies, including suspension and/or debarment.
3. The prospective lower tier participant, vendor or contractor shall provide immediate written notice to the person to which the attached proposal and/or this document is submitted if at any time the prospective lower tier participant, vendor or contractor learns that its certification was erroneous when submitted or has become erroneous by reason of changed circumstances.
4. The terms "covered transaction", "debarred", "suspended", "ineligible", "lower tier covered transaction", "participant", "person", "primary covered transaction", "principal", "proposal", and "voluntarily excluded", as used herein, have the meanings set out in the Definitions and Coverage sections of rules implementing Executive Order 12549 and/or State of Connecticut statutes and regulations. You may contact the person to which this proposal and/or this document is submitted for assistance in obtaining a copy of the foregoing.
5. The prospective lower tier participant, vendor or contractor agrees by submitting the attached proposal and/or this document that, should the proposed covered transaction be entered into, it shall not knowingly enter into any covered transaction with a person who is debarred, suspended, declared ineligible, or voluntarily excluded from participation in this covered transaction unless authorized by the department or agency with which this transaction originated.
6. The prospective lower tier participant, vendor or contractor further agrees by submitting the attached proposal and/or this document that it will include the clause titled "Certification Regarding Debarment, Suspension, Ineligibility, and Voluntary Exclusion-Lower Tier Covered Transactions", without modification, in all covered transaction and in all solicitations for covered transactions.
7. A participant in a covered transaction may rely upon the certification of a prospective participant in a covered transaction that it is not debarred, suspended, ineligible, or voluntarily excluded from the covered transaction, unless it knows that the certification is erroneous. A participant may decide the method and frequency by which it determines the eligibility of its principals. Each participant may but is not required to, check the Non-procurement List.
8. Nothing contained in the foregoing shall be construed to require establishment of a system of records in order to render in good faith the certification required herein. The knowledge and information of a participant is not required to exceed that which is normally possessed by a prudent person in the ordinary course of business dealings.
9. Except for transactions authorized under paragraph 5 herein, if a participant in a covered transaction knowingly enters into a lower tier covered transaction with a person who is suspended, debarred, ineligible, or voluntarily excluded from participation in this transaction, in addition to other remedies available to the Federal, State or Municipal government, the department or agency with which this transaction originated may pursue available remedies, including suspension and/or debarment.

Certification

(1) The prospective recipient of monies hereby certifies, by submission of its attached proposal and/or by execution of this document, that neither it nor its principles are presently debarred, suspended, proposed for debarment, declared ineligible, disqualified, or voluntarily excluded from bidding or participation in the proposed transaction by any Federal, State, or Municipal department or agency or by the statutes, regulations or ordinances of the foregoing departments and agencies.

(2) Where the prospective recipient of monies is unable to certify to any of the statements in this certification, such prospective participant shall attach a written explanation hereto.

Full Legal Name and address of Recipient, Vendor, or Contractor: Cipolly Tree Service, LLC
35 Atwater Place
Cheshire, CT 06410

Print Name and Title of Authorized Representative: Kyle Cipolly owner

Signature of Authorized Representative:

Date: 8/31/20

FILL IN AND RETURN WITH YOUR SUBMISSION

CITY OF WATERBURY
DISCLOSURE AND CERTIFICATION AFFIDAVIT REGARDING OUTSTANDING OBLIGATIONS TO THE CITY OF WATERBURY

For the purposes of this Disclosure of Outstanding Financial Obligations, the following definitions apply:

(a) "Contract" means any Public Contract as defined below.

(b) "Person" means one (1) or more individuals, partnerships, corporations, associations, or joint ventures.

(c) "Public Contract" means any agreement or formal commitment entered into by the city to expend funds in return for work, labor, services, supplies, equipment, materials or any combination of the foregoing, or any lease, lease by way of concession, concession agreement, permit, or per agreement whereby the city leases, grants or demises property belonging to the city, or otherwise grants a right of privilege to occupy or to use said property of the city.

(d) "City" means any official agency, board, authority, department office, or other subdivision of the City of Waterbury.

State of Connecticut

SS.:_____

County of New Haven

Kyle Cipully, being first duly sworn, deposes and says that:

1. I am the ***owner, partner, officer, representative, agent or*** _____ of Cipully Tree Service, LLC (Contractor's Name), the Contractor that has submitted the attached agreement.

2. I am fully informed respecting the preparation and contents of the attached Agreement and of all pertinent circumstances respecting such Agreement;

3. That as a person desiring to contract with the City (check all that apply):

____ The Contractor and each owner, partner, officer, representative, agent or affiliate of the Contractor has filed a list of taxable personal property with the City of Waterbury for the most recent grand list, as required by Conn. Gen. Stat. §12-42.

✓ Neither the Contractor nor any owner, partner, officer, representative, agent or affiliate of the Contractor are required to file a list of taxable personal property with the City of Waterbury for the most recent grand list, as required by Conn. Gen. Stat. §12-42.

____ Neither the Contractor nor any owner, partner, officer, representative, agent or affiliate of the Contractor either directly or through a lease agreement, owes back taxes to the City of Waterbury

FILL IN AND RETURN WITH YOUR SUBMISSION

CITY OF WATERBURY
DISCLOSURE AND CERTIFICATION AFFIDAVIT REGARDING OUTSTANDING OBLIGATIONS TO THE CITY OF WATERBURY

✓ Neither the Contractor nor any owner, partner, officer, representative, agent or affiliate of the Contractor either directly or through a lease agreement, has any other outstanding obligations to the City of Waterbury

4. The following list is a list of the names of all persons affiliated with the business of the Contractor, if none state none. Use additional sheet if necessary (Must be on company letterhead and notarized):

	Name	Title	Affiliated Company (if none state NONE)	Service or Material	DOB
1	Kyle Capully	owner	none	n/a	11/5/86
2					
3					
4					

5. That as a person desiring to contract with the City:

(a) The Contractor or an owner, partner, officer, representative, agent or affiliate of the Contractor provides, or has provided, services or materials to the City within one (1) year prior to the date of this disclosure, if none, state none. Use additional sheet if necessary (Must be on company letterhead and notarized):

	Name	Title	Affiliated Company (if none state NONE)	Service or Material	DOB
1	none				
2					
3					
4					

(b) The Contractor possesses an ownership interest in the following business organizations, if none, state none. Use additional sheet if necessary (Must be on company letterhead and notarized) :

	Organization Name	Address	Type of Ownership
1	Capully Crane Service	1211 Old Colony Road, Wallingford, CT 06492	LLC, owner/member
2			
3			
4			

(c) The following persons possess an ownership interest in the Contractor. If the Contractor is a corporation, list all of the officers of the corporation and the names of each stockholder whose shares exceed twenty-five

FILL IN AND RETURN WITH YOUR SUBMISSION

CITY OF WATERBURY
DISCLOSURE AND CERTIFICATION AFFIDAVIT REGARDING OUTSTANDING OBLIGATIONS TO THE CITY OF WATERBURY

(25) percent of the outstanding stock, if none, state none. Use additional sheet if necessary (Must be on company letterhead and notarized):

Name	Title	DOB	Stock %
1 none			
2			
3			
4			

(d) Of the following of the affiliates, individuals or business entities identified in this affidavit, list each that owns, owned, or within one (1) year prior to the date of this disclosure has owned, taxable property situated in the City of Waterbury, if none state none. Use additional sheet if necessary (Must be on company letterhead and notarized):

Name	Title	Affiliated Company (if none state NONE)	Address	DOB
1 none				
2				
3				
4				

(e) If the Contractor conducts business under a trade name, the following additional information is required: the place where such entity is incorporated or is registered to conduct such business; and the address of its principal place of business, if none, state none:

TRADE NAME	PLACE OF INCORPORATION/REGISTRY	PRINCIPAL PLACE OF BUSINESS
1 none		
2		
3		
4		

I hereby certify that the statements set forth above are true and complete, and I understand that any incorrect information or omission of information from this affidavit may result in the immediate termination of the Contractor's agreement with the City of Waterbury.

For Partnership/Sole Proprietor limited liability company

In presence of:

Lisa Hulteen
Witness

Cipolly Tree Service, LLC
Name of Partnership/Business

FILL IN AND RETURN WITH YOUR SUBMISSION

8/31/26

CITY OF WATERBURY
DISCLOSURE AND CERTIFICATION AFFIDAVIT REGARDING OUTSTANDING OBLIGATIONS TO THE CITY OF WATERBURY

By: Kyle Cipully
Name of General Partner/ Sole Proprietor

35 Atwater Place, Cheshire, CT 06410
Address of Business

State of Connecticut)
) SS
County of New Haven)

Kyle Cipully being duly sworn,

Deposes and says that he/she is owner of Cipully Tree Service, LLC and that he/she answers to the foregoing questions and all statements therein are true and correct.

Subscribed and sworn to before me this 31st day of August 2026.

Melissa Cipully-Bailey
~~(Notary Public)~~
Commissioner of the Superior Court

My Commission Expires: n/a

~~For Corporation~~

n/a

Witness

Name of Corporate Signatory

35 Atwater Place, Cheshire, CT 06410
Address of Business

LLC

Affix Corporate Seal

By: _____
Name of Authorized Corporate Officer

Its: Owner
Title

FILL IN AND RETURN WITH YOUR SUBMISSION

CITY OF WATERBURY
DISCLOSURE AND CERTIFICATION AFFIDAVIT REGARDING OUTSTANDING OBLIGATIONS TO THE CITY OF WATERBURY

State of Connecticut ,
: ss
County of New Haven ,

Kyle Cadby being duly sworn, Service, LLC

deposes and says that he/she is Owner of Cadby Service, LLC and that he/she answers to the foregoing questions and all statements therein are true and correct.

Subscribed and sworn to before me this _____ day of _____ 202_

_____

My Commission Expires n/a

Commissioner of the Superior Court

n/a — LLC

Attachment C Document

- ADDENDUM/CERTIFICATION/NOTICE OF ACCEPTANCE and NON-COLLUSION STATEMENT

FILL IN AND RETURN WITH YOUR SUBMISSION

ATTACHMENT C

KEVIN MC CAFFERY
DIRECTOR OF PURCHASING
235 GRAND STREET, ROOM 103
WATERBURY, CT 06702

The undersigned declares that the only persons or parties interested in this Proposal as principals are as stated; that the Proposal is made without any collusion with other persons, firms, or corporations; that Proposer has carefully examined the entire Request for Proposal; that Proposer has informed itself fully in regard to all conditions pertaining to the Work and the place where it is to be performed; and that with this representation, the undersigned makes this Proposal. These prices shall cover all expenses incurred in performing the Work required under the Contract Documents, of which this Proposal and Form are a part.

The undersigned agrees and covenants that the Contract Time shall commence on delivery of the City of Waterbury's written notice to proceed, which shall occur after contract execution by both parties.

The undersigned acknowledges receipt of addenda numbered: (insert date)

1 Addendum 7 (8/25/26) 4 _____

2 _____ 5 _____

3 _____ 6 _____

All Work for this Project shall be performed at the Proposal Prices as described in the Proposal Documents.

The undersigned hereby certifies under the penalties of perjury that this Proposal is in all respects bona fide, fair and made without collusion or fraud with any other person. As used in this section, the work "person" shall mean any natural person, joint venture, partnership, corporation, or other business or legal entity.

82-4262424
Social Security Number
or Federal Identification Number

Signature of Individual or Corporate Name 8/31/26
Kyle Cipolla

n/a
Corporate Officer
(if applicable)

City notice of acceptance should be mailed, telegraphed or delivered to the undersigned Proposer at the following address:

Name Kyle Cipolla
By: owner
(Title)
Business Address: 35 Atwater Place
(City, State, Zip Code)
Cheshire, CT 06410
Phone: 203 648 1037
Email: office@cipollytree.com
Date: 8/31/26

Note: If the Proposer is a corporation, indicate State of incorporation under signature, and affix corporate seal; if a partnership, give full names and residential addresses, if different from business address.

REQUEST FOR PROPOSAL
#8890
BY
THE CITY OF WATERBURY
Public Works Department
On-Call Tree Services

1. Proposer Information: Please provide the following information:
    a. Firm Name: Cipully Tree Service, LLC
    b. Permanent main office address: 35 Atwater Place, Cheshire, CT 06410
    c. Date firm organized: 2/9/18
    d. Legal Form of ownership: Limited liability company
    e. How many years have you been engaged in services you provide under your present name? 8+ years
    f. Names, titles, reporting relationships, and background and experience of the principal members of your organization, including officers: Kyle Cipully, Owner
2. Experience, Expertise and Capabilities
    a. Philosophy Statement and Business Focus. A statement of the proposer's philosophy and approach in undertaking the services of the nature outlined in the RFP, as well as a description of its primary business focus.
        i. Our primary business focus is tree removal, tree pruning, plant healthcare, and emergency services for all of the above as well. We recycle all organic waste that is removed from every jobsite. We pride ourselves on our reputation and high safety standards in completing each and every job.
    b. Summary of Relevant Experience. A listing of all projects that the proposer has completed within the last three (3) years must be provided, as well as all projects of a similar nature to those included in the Scope of Services in this RFP. The following information shall be provided for each organization listed under this subsection:
        i. Organization name and the name, title, address, and telephone number of a responsible contact person.
        ii. Nature of services provided and dates services started and actually completed. Please indicate, for each assignment, if it was completed within the original contract timeframe and budget. If not, please explain.
        iii. For each project done for a municipality or other government agency, please indicate the gross cost of the agreement.

PROJECT LIST:

- Town of Naugatuck: Tree Removal/Tree Pruning at various locations
    - Point of Contact: Michelle Taylor, Administrative; (203) 720-7071

- Completed throughout 2024-2025, two-year project intermittently
- Completed within original contract timeframe and for original cost provided to the Town
- Gross cost of agreement: $21,600

- Town of Madison: Clearing of Neck River Flood Water Diversion
  - John Iennaco PE, CFM (Professional Engineer license with a Certified Floodplain Manager); (203) 245-5660
  - Began March 2026 and completed two weeks later same month
  - Completed within original contract timeframe and for original cost provided to the Town
  - Gross cost of agreement: $36,000
- Town of Killingly: Tree removal for high school access road
  - Tammy LaPlante, Admin for Engineering/WPCF; (860) 779-5360
  - Began August 26th and project still is in process.
  - Gross cost of agreement: $34,690
- Roma Construction: Vista Point Clearing Project, Groton, CT
  - Cale Carnot, Project Manager; (860) 996-8766
  - Began last week of July 2026 and finished August 24
  - Completed within original contract timeframe and for original cost provided
- Lovley Development: Land clearing on Lazy Lane, Southington, CT
  - Mark Lovley, Owner; (860) 302-2440
  - Began September 2025 and ended January 2026 (two phase project)
  - Completed within original contract timeframe and for original cost provided

Additionally, please list ant contracts or purchase orders in the last three (3) years between the proposer and any agency of the City of Waterbury – N/A

c. Personnel Listing. A complete listing of the staff identified in the work plan by job classification, along with their resumes. Each resume shall include the individual's qualifications and experience in the subject area.
   i. Chris Eustis – Arborist & Plant healthcare specialist. 25 years' experience in the area. Prior salesman and arborist for Wallingford Tree Service.
   ii. Mike Swift – Foreman & Crew Leader. 35 years' experience in the tree care industry. Has been working with Cipully Tree for seven years. Prior owner of All About Trees company.
   iii. Luis – Climber. 12 years' experience in the tree care industry. 2.5 years working with Cipully Tree. Prior climber at Davis Tree.
   iv. Joe D'Amato – Groundsman/flag man. 15 years' experience in the industry. Working with Cipully Tree for 12 years.

d. Conflict of Interest. Disclose any current (within the last 3 years) business, financial, personal, or other types of relationships which may pose a conflict of interest – N/A

3. Statement of Qualifications and Work Plan

a. Qualifications. Please describe your firm's qualifications, experience and capabilities as they pertain to each of the areas of qualifications listed, as well as those of the personnel to be assigned to this project.
   i. **Must have the proper certificate of liability insurance that the City of Waterbury requires** – SEE ATTACHED
   ii. **Must adhere to the terms and conditions set forth within the scope of services** – Pricing will be honored as noted in Attachment E.
   iii. **Experience, expertise and technical competence in regards to providing the types of, or similar services, as those set forth in the scope of services, over the past 5 years** – Owner and crew members/personnel listed within this RFP all have years of experience performing tree removal, pruning, and emergency work. See above Section 2(c).
   iv. **Demonstrated ability to provide required services and perform the work in a timely and efficient manner** – Cipully Tree has not defaulted on a contract throughout our years in business. We have worked for and with multiple municipalities as well as builders and have completed projects within timeframe and budget noted each time.
   v. **Demonstrated experience with public sector projects and in preparing requisitions and invoices for payment and reimbursement to Local, State and Federal Agencies** – Yes, see Project List above noting work with prior municipalities.
   vi. Professional background, experience, qualifications and adequacy of staff to be assigned to this project – See above Section 2(c).
   vii. **If utilizing sub-consultants (where permitted), demonstrate that the team's members have worked together on previous projects and that the subconsultants have the requisite expertise and experience.** – N/A
   viii. **Must have experience working on Golf Courses, in and around sensitive areas as Greens, Tees and Fairways** – Completed major course upgrades at Wallingford Country Club in 2025.

b. Work Plan. Please describe the approach that would be generally followed in undertaking the Scope of Services in Section C above.
   i. Perform scheduled pruning as well as removal of trees for the City. Respond immediately to requests for emergency services related to tree removal/health. We have performed work on Wallingford Country Club which consisted of major course upgrades.
   ii. Regarding the Cost Schedule portion of this RFP, it is tough to determine standard pricing for each above scenario (i.e. pruning, emergency tree removal, golf course upgrades).
   iii. A standard 8-hour pruning day would total $2,720. An emergency 8-hour pruning day would total $3,160. This would be for a three-man

crew (crew chief, climber, and groundsmen) with 10 cubic yard box truck & chipper and 60-foot aerial lift.

iv. A standard 8-hour ground cleanup would be $1,920. An emergency 8-hour ground cleanup would total $2,400. This would be for a two-man crew (crew chief and groundsman) as well as a 10 cubic yard box truck & chipper.

c. Services Expected of the City. Identify the nature and scope of the services that would be generally required of the City in undertaking these projects.
   i. If traffic control is needed, the City will be responsible for any costs inquired associated with same.
   ii. The City must provide 36-hour advance notice for regularly scheduled pruning or removal of trees (this does not include emergency work outlined in this RFP).

4. Cost Schedule. Proposals shall include a single price for work to be performed in accordance with this RFP, inclusive of all personnel and non-personnel expenses. This price should encompass the entire Scope of Services in this RFP. The City reserves the right to negotiate costs, scope of services, and key personnel based on provider proposals. In order for the City to evaluate the proposed cost, proposers must include for each element in the Work Plan outlined in Section I.3.b. above, the staff, hours, hourly rates and the total cost. Include details generally associated with non-personnel costs as an additional cost section.

ADDITIONAL COST:

- Spider lift:
  - Standard hourly rate: $120 per hour
  - Emergency rate: $120 per hour
- Log truck operation:
  - Standard hourly rate: $225 per hour
  - Emergency rate: $225 per hour
- High-capacity chip truck:
  - Standard hourly rate: $120 per hour
  - Emergency hourly rate: $120

Since the City may desire to consider the proposer's experience, qualifications, statement of work, and other aspects of the RFP prior to the Cost Proposal, the Cost Proposal shall be sealed in a separate envelope marked "Confidential: Cost Proposal".

5. Information Regarding: Failure to Complete Work, Default and Litigation.

Please respond to the following questions:

a. **Have you ever failed to complete any work awarded to you? If so, where and why?** – No

b. **Have you ever defaulted on a contract? If so, where and why?** – No
c. **Is there any pending litigation which could affect your organization's ability to perform this agreement? If so, please describe.** – No
d. **Has your firm ever had a contract terminated for cause within the past five years? If yes, provide details.** – No
e. **Has your firm been named in a lawsuit related to errors and omissions within the past five years? If yes, provide details.** – No
f. **During the past seven years, has your firm ever filed for protection under the Federal bankruptcy laws? If yes, provide details.** – No
g. **Are there any other factors or information that could affect your firm's ability to provide the services being sought about which the City should be aware?** – No

6. Exceptions and Alternatives. Proposers wishing to take any exceptions to any requirement in the RFP shall state and explain such exceptions. The City may accept proposals which take exception to any requirements in this RFP, or which offer any alternative to a requirement herein, as well as consider such exceptions and alternatives in evaluating responses. Any exception or alternative must be clearly delineated and cannot materially affect the substance of this Request for Proposals.
    a. If traffic control is needed, the City will be responsible for any costs inquired associated with same.
    b. If an emergency call occurs outside of normal business hours (normal business hours are 8 am to 5 pm on Monday through Friday), there is an 8-hour minimum charge.
    c. Travel time to and from jobsites is billable (shop location is 1211 Old Colony Road, Wallingford, CT 06492).

CERTIFICATE OF LIABILITY INSURANCE

DATE (MM/DD/YYYY): 8/24/2026

THIS CERTIFICATE IS ISSUED AS A MATTER OF INFORMATION ONLY AND CONFERS NO RIGHTS UPON THE CERTIFICATE HOLDER. THIS CERTIFICATE DOES NOT AFFIRMATIVELY OR NEGATIVELY AMEND, EXTEND OR ALTER THE COVERAGE AFFORDED BY THE POLICIES BELOW. THIS CERTIFICATE OF INSURANCE DOES NOT CONSTITUTE A CONTRACT BETWEEN THE ISSUING INSURER(S), AUTHORIZED REPRESENTATIVE OR PRODUCER, AND THE CERTIFICATE HOLDER.

IMPORTANT: If the certificate holder is an ADDITIONAL INSURED, the policy(ies) must have ADDITIONAL INSURED provisions or be endorsed. If SUBROGATION IS WAIVED, subject to the terms and conditions of the policy, certain policies may require an endorsement. A statement on this certificate does not confer rights to the certificate holder in lieu of such endorsement(s).

PRODUCER JMG Insurance Corp P.O. Box 700 Norwalk CT 06852	CONTACT NAME: PHONE (A/C, No, Ext): 203-838-5554 FAX (A/C, No): 203-857-7848 E-MAIL ADDRESS: certs@jmg.com
INSURED CIPUTRE-01 Cipully Tree Service LLC, Cipully Crane Service LLC 35 Atwater Place Cheshire CT 06410	INSURER(S) AFFORDING COVERAGE — NAIC # INSURER A : Travelers Property Casualty Company of America — 25674 INSURER B : Union Insurance Company — 25844 INSURER C : Berkley National Insurance Company — 38911 INSURER D : Acadia Insurance Company — 31325 INSURER E : INSURER F :

COVERAGES **CERTIFICATE NUMBER:** 1600181150 **REVISION NUMBER:**

THIS IS TO CERTIFY THAT THE POLICIES OF INSURANCE LISTED BELOW HAVE BEEN ISSUED TO THE INSURED NAMED ABOVE FOR THE POLICY PERIOD INDICATED. NOTWITHSTANDING ANY REQUIREMENT, TERM OR CONDITION OF ANY CONTRACT OR OTHER DOCUMENT WITH RESPECT TO WHICH THIS CERTIFICATE MAY BE ISSUED OR MAY PERTAIN, THE INSURANCE AFFORDED BY THE POLICIES DESCRIBED HEREIN IS SUBJECT TO ALL THE TERMS, EXCLUSIONS AND CONDITIONS OF SUCH POLICIES. LIMITS SHOWN MAY HAVE BEEN REDUCED BY PAID CLAIMS.

INSR LTR	TYPE OF INSURANCE	ADDL INSD	SUBR WVD	POLICY NUMBER	POLICY EFF (MM/DD/YYYY)	POLICY EXP (MM/DD/YYYY)	LIMITS	
B	X COMMERCIAL GENERAL LIABILITY CLAIMS-MADE X OCCUR GEN'L AGGREGATE LIMIT APPLIES PER: POLICY X PRO-JECT X LOC OTHER:			CPA5609306-11	9/30/2025	9/30/2026	EACH OCCURRENCE DAMAGE TO RENTED PREMISES (Ea occurrence) MED EXP (Any one person) PERSONAL & ADV INJURY GENERAL AGGREGATE PRODUCTS - COMP/OP AGG $	$ 1,000,000 $ 500,000 $ 10,000 $ 1,000,000 $ 2,000,000 $ 2,000,000 $
B	AUTOMOBILE LIABILITY ANY AUTO OWNED AUTOS ONLY X SCHEDULED AUTOS X HIRED AUTOS ONLY X NON-OWNED AUTOS ONLY			CAA5609307-11	9/30/2025	9/30/2026	COMBINED SINGLE LIMIT (Ea accident) BODILY INJURY (Per person) BODILY INJURY (Per accident) PROPERTY DAMAGE (Per accident) $	$ 1,000,000 $ $ $ $
D	X UMBRELLA LIAB X OCCUR EXCESS LIAB CLAIMS-MADE DED RETENTION $			CUA5693400-10	6/24/2026	9/30/2026	EACH OCCURRENCE AGGREGATE $	$ 1,000,000 $ 1,000,000 $
A	WORKERS COMPENSATION AND EMPLOYERS' LIABILITY Y/N ANYPROPRIETOR/PARTNER/EXECUTIVE OFFICER/MEMBER EXCLUDED? (Mandatory in NH) N/A If yes, describe under DESCRIPTION OF OPERATIONS below			6JUB-A435870-3-26	2/9/2026	2/9/2027	X PER STATUTE OTH-ER E.L. EACH ACCIDENT E.L. DISEASE - EA EMPLOYEE E.L. DISEASE - POLICY LIMIT	 $ 1,000,000 $ 1,000,000 $ 1,000,000
C	Riggers Legal Liability			MIM-1109034	12/17/2025	12/17/2026	Agg/Occ	100,000

DESCRIPTION OF OPERATIONS / LOCATIONS / VEHICLES (ACORD 101, Additional Remarks Schedule, may be attached if more space is required)

The City of Waterbury and its Board of Education are listed as Additional Insured on a primary and non-contributory basis on all policies except Workers' Compensation.

Waiver of subrogation applies under the General Liability policy in favor of the Certificate Holder, with regard to work performed by the named insured, only to the extent required by a written contract or agreement executed prior to the applicable loss and only where such waiver is provided by the terms, conditions and endorsements of the policy.

CERTIFICATE HOLDER

City of Waterbury
235 Grand Street
Waterbury CT 06702

CANCELLATION

SHOULD ANY OF THE ABOVE DESCRIBED POLICIES BE CANCELLED BEFORE THE EXPIRATION DATE THEREOF, NOTICE WILL BE DELIVERED IN ACCORDANCE WITH THE POLICY PROVISIONS.

AUTHORIZED REPRESENTATIVE

John O. Forlenio

© 1988-2015 ACORD CORPORATION. All rights reserved.

The ACORD name and logo are registered marks of ACORD

Attachment E

REQUEST FOR PROPOSAL #8890
BY
The City of Waterbury Public Works Department
On-Call Tree Services

(Must be submitted as part of Proposal in a separate sealed envelope, marked "Confidential: Price Proposal.")

Date: 8/28/26

Kevin McCaffery
Director of Purchasing
City of Waterbury
235 Grand Street, Room 103
Waterbury, CT 06702

Sir:

Pursuant to and in compliance with your RFP, the Undersigned,

Cipolly Tree Service, LLC
(Print or Type Company/Corporate Name)

35 Atwater Place
(Print or Type Business Address)
Cheshire, CT 06410

_____

_____

having carefully examined all the RFP Documents, together with all Addenda, as acknowledged on Attachment C, and having informed itself fully in regard to all conditions and related requirements pertaining to the performance of services required under this RFP; and that with this representation, the undersigned makes this Proposal, as follows:

[Proposal continued on following page(s)]

REQUEST FOR PROPOSAL #8890
BY
The City of Waterbury
Public Works Department On-Call Tree Services

Price Proposal

Description of Service	Regular Rate	Emergency Rate
Pruning and Tree Removal (Includes a crew chief, climber & grounds man, 10 cubic yard box truck & chipper and 60' aerial lift	$340 /hr.	$395 /hr.
Ground Cleanup (includes a crew chief and a ground man, 10 cubic yard box truck & chipper)	$240 /hr.	$300 /hr.

Additional Required Pricing Information: These rates will be used to add to or subtract from "crew rates" where man power is otherwise inconsistent with these specifications

Description of Service	Regular Rate	Emergency Rate
Crew Chief/Bucket Operator	$210 /hr.	$300 /hr.
Climber	$115 /hr.	$150 /hr.
Grounds Men	$75 /hr.	$100 /hr.
Flag Man	$55 /hr.	$90 /hr.
EQUIPMENT	Regular Rate	Emergency Rate
Aerial Lift- 70ft w/ working distance	$ 100	$ 100
Chipper & 10 yard Box Truck	$ 100	$ 115

REQUEST FOR PROPOSAL #8890
BY
The City of Waterbury
Public Works Department On-Call Tree Services

Price Proposal continued

Whole Tree Chipper- 14" log capacity	$ 75	$ 100
Stump Grinder	$ 75	$ 75
Crane	$ 250	$ 350
Multi loader/articulating loader with grapple and winch	$ 75	$ 75

82-4262424
Social Security Number
or Federal Identification Number

8/31/26
Signature of Individual or
Corporate Name Kyle Cipully

Cipully Tree Service, LLC
Company Name

n/a
Corporate Officer
(if applicable)

By: Kyle Cipully, owner
(Title)
35 Atwater Place
(Business Address)
Cheshire, CT 06410
(City, State, Zip Code)

Date: 8/31/26

Email: office@cipullytree.com

END OF ATTACHMENT E

SPECIAL CONDITIONS

INDEX TO SPECIAL CONDITIONS

ARTICLE		PAGE
1.	SPECIAL NOTE	SC-1
2.	PERMITS	SC-1
3.	CONSTRUCTION STAKE OUT	SC-1
4.	SITE RESTORATION	SC-1
5.	CITY NOTIFICATION – BACKFILLING	SC-1
6.	PUBLIC USE OF EXISTING PUBLIC FACILITIES	SC-1
7.	ACCESS TO PRIVATE & PUBLIC PROPERTY	SC-1
8.	WINTER SHUTDOWN	SC-2
9.	OWNER CONTROLLED CONTINGENCY ALLOWANCE	SC-2
10.	CHANGES TO THE WORK	SC-2
11.	LAYDOWN AREAS / MATERIAL STORAGE	SC-2
12.	ADDENDUM TO GENERAL CONDITION ARTICLES 11 & 95	SC-3
13.	ADDENDUM TO GENERAL CONDITIONS ARTICLE 1	SC-3
14.	CITY DESIGN STANDARDS, SPECIFICATIONS AND DETAILS	SC-3
15.	ADDENDUM TO GENERAL CONDITIONS ARTICLE 2	SC-3
16.	ADDENDUM TO GENERAL CONDITION ARTICLE 8, 9, 10	SC-3
17.	MOBILIZATION AND DEMOBILIZATION	SC-3
18.	IMPROVEMENT LOCATION AND TOPOGRAPHICAL SURVEY	SC-3
19.	ADDENDUM TO GENERAL CONDITION ARTICLE 93	SC-3
20.	INTENT OF DRAWINGS	SC-3
21.	ADDENDUM TO GENERAL CONDITION ARTICLES 31	SC-3
22.	ADDENDUM TO GENERAL CONDITIONS	SC-4

ARTICLE 1. SPECIAL NOTE

These Special Conditions shall be subject to all requirements of the Contract, amend or supplement the General Conditions, and modify all Contract Documents which follow them numerically, as set forth in Section 1.2 of the Contract. The terms used in these Special Conditions which are defined in the Contract or General Conditions have the meanings assigned to them in said documents. All provisions of the General Conditions which are not so amended or supplemented remain in full force and effect.

This section applies equally and specifically to all contractors supplying labor and/or equipment and/or materials for this Project; and to all of the Contract Documents. All Contract Documents apply to this Section. Where items of the Contract are repeated, it is intended to call particular attention to or qualify them; it is not intended that any other parts of the Contract shall be assumed to be omitted if not repeated herein.

Unless expressly provided for otherwise, and regardless if not expressly stated in each Article herein, the costs associated with all work and/or services required under the Special Conditions shall be considered as included in the overall cost of the Contract items. No separate or additional payment will be made for this work and/or services.

ARTICLE 2. PERMITS

The Contractor shall obtain all applicable Federal, State and local permits and registrations necessary to complete the project at no additional cost to the City. The cost of obtaining and maintaining the permits shall be included in the Contract Amount.

The Contractor shall give all notices and comply with all laws, ordinances, rules and regulations including building and fire safety codes relating to the performance of the Work.

ARTICLE 3. CONSTRUCTION STAKE OUT - NOT USED

ARTICLE 4. SITE RESTORATION

The Contractor will blend the new work into the existing ground surface and replace any adjacent disturbed materials that may have been damaged or irregular do to construction and/or new installations.

ARTICLE 5. CITY NOTIFICATION - BACKFILLING

Before backfilling any excavated area and after an improvement has been installed the contractor shall notify the City when a backfill operation is to occur. A City representative will make one observation for each excavated area.

ARTICLE 6. PUBLIC USE OF EXISTING PUBLIC FACILITIES

The Contractor shall limit his work area to the site of the construction and its immediate vicinity. No equipment or construction activities are allowed on the existing public facilities, such as athletic fields without prior written approval by the City. No equipment or storage is allowed outside of the designated construction area without prior written approval by the City. The number and location(s) of storage containers shall be approved by the City.

ARTICLE 7. ACCESS TO PRIVATE & PUBLIC PROPERTY

Throughout the duration of Construction, the Contractor shall maintain access to all businesses, places of worship, schools and private residences, etc. in the project area. Particular attention is noted for funeral processions, wedding processions, and other similar activities.

Where required by the City, Contractor shall also conduct regular coordination meetings with Residents, Owners and Operators of businesses and other operations to coordinate active work periods.

Contractor shall also provide and place temporary ramps at driveways or other locations where, in the opinion of the City, there is a need to provide safe access until the permanent handwork is completed.

ARTICLE 8. WINTER SHUTDOWN

No 'winter shutdown' will be permitted for this Project.

Any 'winter shutdown' authorized under this Article shall not change the "Contract Time" for the project. Any extension of the Contract Time must be by formal amendment to the Contract in accordance with the provisions of the Procurement Ordinance of the City of Waterbury.

ARTICLE 9. OWNER CONTROLLED CONTINGENCY ALLOWANCE

If an Owner Controlled Contingency Allowance ("OCCA") has been provided in the Contract, it is to provide an account for certain expenditures found necessary by and ordered done by the City. This item shall include any unforeseen work made necessary by changes in the plans or necessitated by site conditions. Work for which payment is included under other items shall not be considered for inclusion under this item.

Use of the OCCA requires the City's advance written authorization. Determination of amounts to be paid for work under this item shall be in accordance with Article 10 of the Special Conditions and at the sole discretion of the City.

Determination of amounts to be paid for work under this Article shall be agreed to in advance by the Contractor and City and shall not exceed amounts established in the OCCA. At project closeout, unused amounts remaining in the allowance shall be credited to the City by Final Change Order (as part of and so documented in Contractor's final payment request).

In no instance shall payments made pursuant to this Article result in an increase in the amount of the Contract Total Compensation or extension of Contract Time. Any increase above the Contract Total Compensation or Contract Time resulting from utilization of this Article must be by a duly authorized and executed Contract amendment in accordance with Section 27 of the Contract.

ARTICLE 10. CHANGES TO THE WORK

If the City authorizes changes to the work, the following shall apply:

The cost for changes to the work shall be either on a firm proposal agreed to by the City or based on a cost-plus-fee basis agreeable to the City. In the event the work is to be performed on a cost plus basis, the Contractor will perform, or cause to be performed by his subcontractors, such work at direct cost, plus the percentages set out below:

1. For work performed by the Contractor's own forces, direct cost plus Ten Percent (10 %).
2. For work performed by a subcontractor, the cost to the City shall be subcontractor cost to the Contractor, plus 5 %.

ARTICLE 11. LAYDOWN AREAS / MATERIAL STORAGE

A Laydown Area shall not impede traffic flow within the City streets. The Contractor may use these areas during construction and shall be required to restore any disturbed areas to a condition as good as or better than existing conditions.

Contractor shall also be required to clean up, restore, and make safe and usable all Laydown Areas as directed by the Engineer. This may include removing equipment, materials, tools, etc., from the any Laydown Area for a period to be determined by the City of Waterbury.

The City will not provide any staging area for Construction and/or Contractor operations. The Contractor shall provide its own staging/storage area. Lay down areas within the project's limits are allowed but require pre-approval from the City. In all cases, the Contractor shall be responsible for the protection of all materials, tools, etc. Materials received on site which are not immediately installed shall be carefully and securely stored. All materials used throughout work shall be neatly stacked so as not to obstruct the progress of the work or endanger the public, adjacent property owners and tenants or the City.

The Contractor shall provide its own storage facilities and in all cases be responsible for the protection of all materials, tools, etc. The number and location(s) of storage containers shall be approved by the City. Materials received on site which are not immediately installed shall be carefully and securely stored. All materials used throughout work shall be neatly stacked so as not to obstruct the progress of the work or endanger the public or the City or City's employees or tenants. All deliveries of material, equipment, etc., shall be made to the Contractor and accepted only by him/her and only during working hours. City personnel will not receive or accept any materials or equipment, etc. at any time.

ARTICLE 12. ADDENDUM TO GENERAL CONDITIONS 11 and 95
Reference is made to General Condition Articles 11 – Temporary Utilities, and 95 – Temporary Water Supply. The Contractor shall be responsible for determining and supplying at no cost to the City all temporary utilities needed to maintain utility service to all adjacent property owners/tenants.

ARTICLE 13. ADDENDUM TO GENERAL CONDITIONS ARTICLE 1 – NOT USED

ARTICLE 14. CITY DESIGN STANDARDS, SPECIFICATIONS AND DETAILS – NOT USED

ARTICLE 15. ADDENDUM TO GENERAL CONDITIONS ARTICLE 2 – NOT USED

ARTICLE 16. ADDENDUM TO GENERAL CONDITIONS 8, 9 and 10
Reference is made to General Condition Article 8 – Sedimentation and Erosion Control, Article 9 – Protection of Environmental Resources and Article 10 - Environmental Protection Plan. The requirements of Articles 8, 9 and 10 shall not apply to this project; however, the Contractor shall responsible for any such requirements to the extent set forth in the Technical Specifications or elsewhere in the Contract Documents.

ARTICLE 17. MOBILIZATION AND DEMOBILIZATION
The costs of Mobilization and Demobilization for the project shall be included in the contract bid amount. No separate payment shall be made for Mobilization and/or Demobilization.

ARTICLE 18. IMPROVEMENT LOCATION AND TOPOGRAPHICAL SURVEY
Completion of an Improvement Location Survey is <u>not</u> required for this Project.

ARTICLE 19. ADDENDUM TO GENERAL CONDITIONS 93
In lieu of the daily reports required in Article 93 of the general conditions, the contractor shall provide said reports as provided in any issued applicable Task Orders.

ARTICLE 20. INTENT OF DRAWINGS - NOT USED

ARTICLE 21. ADDENDUM TO GENERAL CONDITION 31
Reference is made to General Condition Article 31 – Use of Premises and Removal of Debris. During the progress of the work, the Contractor shall keep the construction areas in a neat condition, free from accumulations of waste materials and rubbish. Lunch papers, bottles, lumber cut-offs, drinking cups and like rubbish shall be removed from the site daily. No alcoholic beverages will be permitted at the construction site(s).

On or before the completion of the work and before acceptance and final payment shall be made, the Contractor shall clean and remove, from the site and adjacent property all surplus and discarded materials, rubbish, and temporary structures and restore, in an acceptable manner, all property and leave the whole area in a neat and presentable condition.

ARTICLE 22. ADDENDUM TO GENERAL CONDITIONS
The following General Conditions Articles are not applicable to this RFP8388:

General Conditions Articles 1-4, 10, 15-17, 36, 44, 46-47, 53-54, 76-78, 84, 90, 94, 102, 105, 108, 109, and 113.

END OF SECTION

RFP # 8890

GENERAL CONDITIONS

INDEX TO GENERAL CONDITIONS

ARTICLE	TITLE	PAGE
1.	PLANS AND SPECIFICATIONS AT THE SITE	GC-1
2.	CONSTRUCTION PROGRESS SCHEDULE	GC-1
3.	ESTIMATED QUANTITIES	GC-2
4.	SCHEDULE OF VALUES; APPLICATION FOR PAYMENT	GC-2
5.	PARTIAL PAYMENTS	GC-2
6.	INSPECTION AND TESTS	GC-3
7.	UTILITIES	GC-3
8.	SEDIMENTATION AND EROSION CONTROL	GC-3
9.	PROTECTION OF ENVIRONMENTAL RESOURCES	GC-4
10.	ENVIRONMENTAL PROTECTION PLAN	GC-5
11.	TEMPORARY UTILITIES	GC-5
12.	ABBREVIATIONS	GC-5
13.	SUBSURFACE EXPLORATION	GC-7
14.	CONTRACT AND CONTRACT DOCUMENTS	GC-7
15.	SHOP DRAWINGS, CATALOG CUTS AND SAMPLES	GC-7
16.	CONTRACTOR'S TITLE TO MATERIALS	GC-8
17.	"OR EQUAL" CLAUSES	GC-8
18.	REPRESENTATIONS OF THE CONTRACTOR	GC-8
19.	PROTECTION OF WORK AND PROPERTY (EMERGENCY)	GC-9
20.	WEATHER CONDITIONS	GC-9
21.	SUBLETTING	GC-9
22.	SUBSTITUTE BOND	GC-10
23.	RIGHT TO WITHHOLD PAYMENTS	GC-10
24.	PAYMENTS BY CONTRACTOR	GC-10
25.	NOTICE OF WARNING	GC-10
26.	PROGRESS MEETINGS.	GC-10
27.	PERMITS	GC-10
28.	RIGHT TO USE THE WORK	GC-11
29.	PROVISIONS REQUIRED BY LAW	GC-11
30.	WAIVER	GC-11
31.	USE OF PREMISES AND REMOVAL OF DEBRIS	GC-11
32.	RIGHT OF WAY AND SUSPENSION OF WORK	GC-11
33.	CONSTRUCTION EQUIPMENT AND MACHINERY	GC-12

INDEX TO GENERAL CONDITIONS

ARTICLE	TITLE	PAGE
34.	GENERAL GUARANTEE	GC-12
35.	PROCEDURE IN CONSTRUCTION	GC-13
36.	APPRENTICES	GC-13
37.	CONTROL OF WORK	GC-13
38.	CITY'S CONTROL NOT LIMITED	GC-13
39.	AUTHORITY AND DUTIES OF INSPECTORS	GC-13
40.	INSPECTION AND CORRECTION OF WORK	GC-14
41.	CONTRACTOR'S OBLIGATIONS	GC-14
42.	TOILET ACCOMMODATIONS AND DRINKING WATER	GC-15
43.	SAFETY AND HEALTH REGULATIONS	GC-15
44.	OWNERSHIP OF DRAWINGS AND SPECIFICATIONS	GC-15
45.	RESIDENTS' PREFERENCE IN WORK ON OTHER PUBLIC FACILITIES	GC-15
46.	LISTING OF EMPLOYMENT OPENINGS	GC-15
47.	SERVICE OF PROCESS	GC-16
48.	CITY OF WATERBURY ORDINANCE CHAPTER 34	GC-16
49.	WAGE RATES	GC-16
50.	SCHEDULE AND POSTING OF MINIMUM WAGE RATES	GC-16
51.	COMPUTATION OF WAGES AND OVERTIME COMPENSATION	GC-17
52.	WAGE UNDERPAYMENTS AND ADJUSTMENTS	GC-17
53.	CONFORMANCE OF WORK	GC-17
54.	DIMENSIONS AND SCHEDULES	GC-17
55.	PROTECTION FROM STORM	GC-17
56.	PROTECTION OF WORK AND MATERIALS	GC-17
57.	FURTHER SAFEGUARDS	GC-17
58.	FIRST AID TO INJURED	GC-18
59.	CONFORMANCE WITH DIRECTIONS	GC-18
60.	COMPETENT HELP TO BE EMPLOYED	GC-18
61.	STREETS AND SIDEWALKS TO BE KEPT OPEN	GC-18
62.	LIGHTS, BARRIERS, FENCES, WATCHMEN & INDEMNITY	GC-18
63.	WORK OUTSIDE REGULAR HOURS	GC-19
64.	BUS LINE INTERFERENCE	GC-19
65.	COLD WEATHER WORK	GC-19
66.	BLASTING AND EXPLOSIVES	GC-19

INDEX TO GENERAL CONDITIONS

ARTICLE	TITLE	PAGE
67.	TUNNELING	GC-20
68.	RESERVED MATERIALS/EXCAVATED MATERIALS	GC-20
69.	OBSTRUCTIONS AND CROSSOVERS	GC-20
70.	DIRECTIONAL SIGNS AND LIGHTS	GC-21
71.	MAINTENANCE OF WORKPLACE	GC-21
72.	OPERATIONS AT SEVERAL POINTS	GC-21
73.	INTERFERENCE WITH EXISTING STRUCTURES	GC-21
74.	TURF, TOPSOIL AND OTHER REPLACEMENT ITEMS	GC-21
75.	MATERIALS	GC-21
76.	DEFECTIVE MATERIALS	GC-22
77.	INSPECTION AND TESTING OF FURNISHED MATERIALS.	GC-22
78.	SAMPLES AND ORDERING LISTS	GC-22
79.	SANITARY CONVENIENCES	GC-22
80.	FINISHING AND CLEANING UP	GC-22
81.	RIGHTS OF ACCESS	GC-23
82.	WORK BY OTHERS	GC-23
83.	WORK WITHIN THE LIMITS OF PRIVATE PROPERTY	GC-23
84.	LOADING	GC-24
85.	COMPLETION OF WORK	GC-24
86.	DUST AND SPILLAGE CONTROL	GC-24
87.	CARE OF THE WORK	GC-24
88.	EMERGENCY WORK	GC-24
89.	FIRE PREVENTION AND PROTECTION	GC-25
90.	PLANIMETER	GC-25
91.	SUPERINTENDENCE	GC-25
92.	CONTRACT ADMINISTRATION COSTS - OUTSIDE REGULAR HOURS	GC-25
93.	DAILY REPORTS	GC-25
94.	MATERIAL AND WORKMANSHIP	GC-25
95.	TEMPORARY WATER SUPPLY	GC-26
96.	FITTING AND COORDINATION OF WORK	GC-26
97.	ARCHEOLOGICAL FINDS	GC-26
98.	EXCAVATIONS NEAR UNDERGROUND UTILITIES	GC-26
99.	WATER QUALITY OF WELLS.	GC-27

INDEX TO GENERAL CONDITIONS

ARTICLE	TITLE	PAGE
100.	WORK IN STATE HIGHWAYS	GC-27
101.	EXISTING INSPECTION REPORTS	GC-27
102.	TEST REPORTS; CERTIFICATES OF COMPLIANCE AND SHIPPING LISTS	GC-27
103.	CLEANING FINISHED WORK	GC-27
104.	COMPLIANCE TO ACTS AND EXECUTIVE ORDERS	GC-28
105.	SEMI-FINAL INSPECTION / SUBSTANTIAL COMPLETION	GC-28
106.	CITY'S CERTIFICATE OF SUBSTANCIAL COMPLETION	GC-28
107.	LIMITED ACCEPTANCE OF WORK	GC-29
108.	FINAL INSPECTION	GC-29
109.	FINAL CHANGE ORDER	GC-29
110.	FINAL PAYMENT APPLICATION	GC-30
111.	FINAL COMPLETION/ CITY'S CERTIFICATE OF FINAL COMPLETION / NOTICE OF PROJECT ACCEPTANCE	GC-30
112.	ACCEPTANCE OF FINAL PAYMENT	GC-30
113.	10-HOUR OSHA CONSTRUCTION SAFETY AND HEALTH COURSE	GC-30

GENERAL CONDITIONS

INTRODUCTORY NOTE:

These General Conditions supplement the provisions and requirements of Contract and modify all Contract Documents which follow it numerically, as set forth in Section 1.2 of the Contract. The General Conditions may be amended, revised or supplemented by the Special Conditions which are project specific. The Contractor's attention is directed to the attached Special Conditions for any amendments, revisions or supplements to the General Conditions for this project. The terms used in these General Conditions which are defined in the Contract have the meanings assigned to them in said Contract.

This section applies equally and specifically to all contractors supplying labor and/or equipment and/or materials for this Project and all drawings, specifications and general provisions of the Contract apply to these General Conditions. Where items of the Contract are repeated, it is intended to call particular attention to or qualify them; it is not intended that any other parts of the Contract shall be assumed to be omitted if not repeated herein.

Unless expressly provided for otherwise in the Contract Documents, all costs associated with any work/services required or necessary under the General Conditions shall be considered as included in the Contract Amount (also referred to as Total Compensation). No separate or additional payment will be made for this work and/or services.

ARTICLE 1. PLANS AND SPECIFICATIONS AT THE SITE / AS-BUILT DRAWINGS

1.01 The Contractor shall maintain at the Project site two (2) copies of all Plans, Specifications, Addenda, approved Shop Drawings, Change Orders and other Modifications, Schedules and Instructions, in good order. One copy is to be marked to record all changes made during construction. These shall be available at all times to the Project Engineer and the City or their authorized representatives. At the conclusion of construction, the Contractor is to turn one (1) corrected set of all documents over to the Project Engineer.

ARTICLE 2. CONSTRUCTION PROGRESS SCHEDULE

2.01 Within seven (7) consecutive calendar days of the written Notice to Proceed, and prior to commencement of any work on site, the Contractor shall prepare and submit for the approval of the City three (3) copies of a complete Construction Progress Schedule which shall be comprised of a critical path method network. (At the same time, the Contractor shall submit the Schedule of Values, Sedimentation and Erosion Control Measures, Water Control Plan and Environmental Protection Plan, as outlined in the various Articles of these General Conditions).

2.02 The critical path of the Project must be identified on the Construction Progress Schedule which shall provide a workable plan for monitoring the progress of all the elements of the Project, establish and clearly display the critical elements of the Work, on which each part or division of the Work is expected to be started and completed, forecast completion of the elements of the Project, and match the Contract duration in time. The Construction Progress Schedule shall also indicate the logic of the work for the major elements and components of work under the Contract, such as the planned mobilization of plant and equipment, sequences of operations, procurement of materials and equipment, duration of activities, type of relationship, lag time (if any), and such other information as it is necessary to present a clear statement of the intended activities.

2.03 The schedule shall indicate all subcontractors to be utilized on the Contract and the portions of the Contract that they will be performing. The Contractor shall evaluate the status of the Project at least monthly, comparing it to the original schedule, which shall be revised as required. The Contractor shall notify the Project Engineer immediately of any circumstances that may affect the current schedule.

2.04 The Contractor shall perform the work of this Contract to satisfy the Construction Progress Schedule as approved by the Project Engineer. However, the Project Engineer and City reserve the right to amend and alter the Construction Progress Schedule, as approved, at any time and in a manner which the Engineer deems to be in the best interests of the City.

2.05 The Contractor shall be required to execute his work in accordance with the Construction Progress Schedule as prepared and in accordance with any additional requirements specified herein and approved by the Project Engineer.

The Construction Progress Schedule shall forecast the times for doing each portion of the work. The Contractor shall arrange the work under this Contract to conform with the Construction Progress Schedule, as it may be revised by the Engineer from time to time, at no additional expense to the City.

2.06 The revised Construction Project Schedule shall take some or all of the following actions to demonstrate the manner in which an acceptable rate of progress will be regained, by the following methods:

i. Increase construction manpower in such quantities and crafts as shall substantially eliminate the backlog of work and meet the current Contract completion date.
ii. Increase the number of working hours per shift, the number of shifts per day, the number of work days per week, or the amount of construction equipment, or any combination of the foregoing
iii. Reschedule work items to achieve concurrent accomplishment of work activities.

2.07 Under no circumstances will the adding of equipment or construction forces, increasing the working hours, or employing any other method, manner, or procedure to return to the contractually required completion dates be a justification for additional compensation to the Contractor.

ARTICLE 3. ESTIMATED QUANTITIES

3.01 Any Estimated Quantities for the Project furnished by the City, including those provided on the Bid/Proposal Form, are approximate only and are: a) for procurement related comparison purposes only, b) given as a basis for the pricing and c) are not represented to be actual quantities for completion of the Work. Within the limits of available funds, the Contractor will be required to complete the Work at the unit prices provided in the Bid Form/or Price Proposal whether it involves quantities greater or lesser than the estimate. The Contractor will be compensated only for the actual quantity of authorized, and actually performed, and/or materials furnished.

ARTICLE 4. SCHEDULE OF VALUES; APPLICATION FOR PAYMENT

4.01 Within seven (7) consecutive calendar days after the Notice to Proceed, as a basis for estimating partial payments, the Contractor shall submit for the approval of the City a certified Schedule of Values, broken down into quantities and unit costs for the various parts of the work, divided as may be directed and aggregating the total sum of the Contract; and if required, he shall submit evidence supporting this schedule.

4.02 The Contractor's requisition for payment shall be submitted on forms supplied by the Contractor and approved by the City and shall be in such numbers of copies as may be designated by the City. Sample forms are included in the ITB/RFP Documents. Alternate payment application forms may be utilized provided they are approved by the City, in writing, prior to submission by the Contractor.

4.03 If the Project is funded by multiple funding sources, the Contractor may be required to submit separate requisitions for payment to each source, on the forms provided by each source and in accord with all requirements of each individual funding source.

4.04 For Lump Sum projects, the requirements for the Schedule of Values are further defined as follows: a) the Schedule of Values shall delineate the various tasks that comprise the lump sum items. Each item in the Schedule of Values shall include its proper share of overhead and profit. This schedule, when accepted by Project Engineer, shall only be used as a basis for Contractor's periodic payment applications. No payment will be made to Contractor until such Schedule has been submitted and accepted by Project Engineer, and b) the lump sum item shall be broken down sufficiently to provide a convenient and realistic means for determining the amount of work done during various stages of progress.

ARTICLE 5. PARTIAL PAYMENTS

5.01 The City will review the Contractor's monthly requisitions for Partial Payments to arrive at what is, in its opinion, a fair and just estimate of the materials suitably stored on the site and the amount of work performed on the Contract. At its discretion, the City may allow to be included in the monthly requisitions materials stored off the site. In the event the City allows the Contractor to include in its requisitions payments for materials stored off the site, the Contractor shall also submit any additional bonds and/or insurance certificates relating to off-site stored material, and follow such other procedures as may be required by the City.

5.02 In making such Partial Payments for the Project, retainage shall be held in the amount of 5% of the value of work completed to date. The Retainage does not include additional sums that the City may withhold due to the Contractors failure to comply with construction plans, specifications etc. deemed provisions of this contract.

5.03 Where prices are not broken down sufficiently in the Schedule of Values to accurately determine the value of work completed, Project Engineer will estimate the value of work completed and will deduct some amount so as to arrive at a conservative value which will allow City to easily complete the Work with the unpaid balance. When the required detail in the Schedule of Values is not provided by Contractor, Contractor agrees to accept Project Engineer's determinations.

ARTICLE 6. INSPECTION AND TESTS

6.01 All material and workmanship shall be subject to inspection, examination and testing by the City and/or Project Engineer (in addition to that required by the Specifications) any and all times during manufacture and/or construction and at any and all places where such manufacture and/or construction is carried on. Notice of the time of all tests to be made at the site shall be given to all interested parties.

6.02 Contractor must obtain the Engineer's approval of any sources of materials to be incorporated into the Project before beginning to use them for the Project.

6.03 If, at any time before issuance of a Notice of Project Acceptance by the City, the City and/or Project Engineer considers it necessary or advisable to examine any portion of the Project already completed by removing or testing out the same, the Contractor shall upon request furnish promptly all necessary facilities, labor and materials. If such work is found to be defective in any material respect because of a fault of the Contractor or any of its subcontractors, or if any work shall have been covered over without the approval or consent of the City (whether or not it is found to be defective), the Contractor shall be liable for testing costs and all costs of correction, including labor, material, services of required consultants, additional supervision and administrative costs.

6.04 For Projects that include material testing to ensure compliance with the Technical Specifications, the Contractor, unless expressly provided for otherwise in the Contract Documents, shall be responsible for all testing as required in the relevant sections of the Technical Specifications.

6.05 Without additional charge, the Contractor shall promptly furnish all reasonable facilities, labor and materials necessary to make tests safe and convenient. Special, full size and performance tests shall be as described in the Specifications.

ARTICLE 7. UTILITIES

7.01 The accuracy and completeness of the utility information shown on the Plans and/or otherwise provided by the City is not guaranteed. The Contractor shall make its own investigation of the extent and location of utilities and of the possibility of relocation work by the utility companies, and shall plan its operations accordingly. No claim for any delays, damage or extra work occasioned thereby will be allowed.

7.02 The Contractor shall allow others access to the Project for the purpose of placing, relocating or maintaining utilities, and he shall cooperate in every way in the performance of this Project.

7.03 The Contractor shall notify the utility owners well in advance of the time the Contractor proposes to perform any work which would endanger utility installations, and the Contractor shall cooperate with the utility owners in relocating and/or protecting such installations during construction operations.

7.04 No payment will be made to the Contractor for locating, protecting and making arrangements for relocating public utilities or for any delays caused thereby. The Contractor shall include all costs of this Project in other scheduled items of the Contract.

ARTICLE 8. SEDIMENTATION AND EROSION CONTROL

8.01 All watercourses shall be protected from sedimentation, both during and after construction. The Contractor shall

control erosion and sedimentation problems in accordance with Connecticut Guidelines for Soil Erosion and Sediment Control prepared by the Connecticut Council on Soil and Water Conservation, dated 2002, as amended.

8.02 The Contractor shall submit the Sedimentation and Erosion Control Plan for the approval of the Project Engineer within seven (7) consecutive calendar days after the Notice to Proceed.

8.03 The Contractor shall be responsible for providing silt fences, staked haybales and other temporary erosion control measures which may be required to properly complete this Project. No extra compensation will be allowed, due to water or precipitation levels fluctuation.

ARTICLE 9. PROTECTION OF ENVIRONMENTAL RESOURCES

9.01 The environmental resources within the Project boundaries and those affected outside the limits of permanent work under this Contract shall be protected during the entire period of this Contract. The Contractor shall confine its activities to areas defined by the Plans and Specifications. Environmental protection shall be as stated in the following subparagraphs:

A. Prior to the beginning of any construction, the Contractor shall identify all land resources to be preserved within the work area. The Contractor shall not remove, cut, deface, injure or destroy land resources including trees, shrubs, vines, grasses, top soil and land forms without special written permission from the property owner. No ropes, cables or guys shall be fastened or attached to any trees for anchorage unless specifically authorized in writing by the Project Engineer. Where such special emergency use is permitted, the Contractor shall provide effective protection for land and vegetation resources at all times as defined in the following subparagraphs.

B. Prior to any construction, the Contractor shall mark the areas that are not required to accomplish all work to be performed under the Contract. Isolated areas within the general work area which are to be saved and protected shall also be marked or fenced. Monuments and markers shall be protected before construction operations commence. Where construction operations are to be conducted during darkness, the markers shall be visible. The Contractor shall convey to its personnel the purpose of marking and/or protection of all necessary objects.

C. Trees, shrubs, vines, grasses, land forms and other landscape features indicated and defined on the Plans to be preserved shall be clearly identified by marking, fencing or wrapping with boards, or any other approved techniques.

D. Earthwork brought to final grade shall be finished as indicated and specified. Side slopes and back slopes shall be protected as soon as practicable upon completion of rough grading. All earth work shall be planned and conducted to minimize the duration of exposure of unprotected soils. Except in instances where the constructed feature obscures borrow areas, quarries and waste material areas, these areas shall not initially be cleared in total. Clearing of such areas shall progress in reasonably sized increments as needed to use the areas developed as approved by the City and/or Project Engineer.

E. Runoff from the construction site shall be controlled by the construction of diversion ditches, benches and berms to retard and divert runoff to protected drainage courses, and any measures required by area wide plans approved under Paragraph 208 of the Clean Water Act, as amended.

F. The Contractor shall construct or install all temporary erosion control features as indicated in the submitted Sedimentation and Erosion Control Plans, or directed by the City and/or Project Engineer. Temporary erosion control measures such as berms, dikes, drains, grassing and mulching shall be maintained until construction of the Project is completed.

G. The Contractor's field offices, staging areas, stockpile storage and temporary buildings shall be placed in areas designated on the submitted Plan. Temporary movement or relocation of the Contractor's facilities shall be made only on approval by the City and/or Project Engineer.

H. Borrow areas shall be managed to minimize erosion and to prevent sediment from entering nearby watercourses.

I. Spoil areas shall be managed and controlled to limit spoil areas and to prevent erosion of soil or sediment from entering nearby watercourses. Spoil areas shall be developed in accordance with the grading plan indicated on the Plans.

ARTICLE 10. ENVIRONMENTAL PROTECTION PLAN

10.01 Within seven (7) consecutive calendar days after the Notice to Proceed, and prior to commencement of any work on site, the Contractor shall submit an Environmental Protection Plan for the approval of the City in accordance with the provisions herein specified. The plan shall include but not be limited to the following:

A. A list of Federal, State and Local laws and regulations concerning environmental protection, pollution control and abatement that are applicable to the Contractor's proposed operations and the requirements imposed by those laws and regulations.

B. Methods for protection of features to be preserved within authorized work areas. The Contractor shall prepare a listing of methods to protect resources needing protection, i.e., trees, shrubs, vines, grasses and groundcover, landscape features, air and water quality, fish and wildlife, soil, historical, archeological and cultural resources.

C. Procedures to be implemented by the Contractor to provide the required environmental protection and to comply with applicable laws and regulations. The Contractor shall set out the procedures to be followed to correct pollution of the environment due to accident, natural causes or failure to follow the procedures set out in accordance with the Environmental Protection Plan.

D. The location of the nearest suitable solid waste disposal area and a permit allowing the Contractor to use those facilities.

E. Drawing showing locations of any proposed temporary excavations or embankments for haul roads, stream crossings, material storage areas, structures, sanitary facilities, and stockpiles of excess' or spoil materials.

F. Environmental monitoring plans for the job site, including land, water, air and noise monitoring as necessary, and as required by the Project Engineer.

G. Environmental monitoring and management plans for the any endangered wildlife or plant species as determined by CT DEEP, City or Project Engineer.

H. Traffic control plan when necessary.

I. Methods of protecting surface and ground water during construction activities.

J. Work area plan showing the proposed activity in each portion of the area and identifying the areas of limited use or nonuse. The plan should include measures for marking the limits of use areas.

ARTICLE 11. TEMPORARY UTILITIES

11.01 Unless expressly otherwise provided for in the Contract Documents the Contractor shall be responsible for determining and supplying at no cost to the City all temporary utilities of any nature whatsoever needed to complete the work. Unless otherwise provided for in the ITB/RFP Documents, all necessary temporary utilities shall be installed at the start of the Project.

ARTICLE 12. ABBREVIATIONS

12.01 Where one of the following abbreviations are used in the Contract Documents, it shall have the meaning set forth opposite each below:

AASHTO	American Association of State Highway and Transportation Officials
ACI	American Concrete Institute

AGA	American Gas Association
AIEE	American Institute of Electrical Project Engineers
AISC	American Institute of Steel Construction
API	American Petroleum Institute
ANSI	American National Standards Institute
ASCE	American Society of Civil Engineers
ASHRAE	American Society of Heating, Refrigeration and Air Conditioning Engineers
ASME	American Society of Mechanical Engineers
ASTM	American Society of Testing and Materials
AWG	American (or Brown and Sharpe) Wire Gauge
AWWA	American Water Works Association
CONNDOT	Connecticut Department of Transportation
DEP	Department of Environmental Protection
EDR	Equivalent Direct Radiation
EPA	Environmental Protection Agency
FWQA	Federal Water Quality Administration
IBR	Institute of Radiator and Boiler Manufacturers
MCB	Master Car Builders
NBS	National Bureau of Standards
NEC	National Electrical Code (latest edition)
NEMA	National Electrical Manufacturers Association
NEWWA	New England Water Works Association
NFPA	National Fire Protection Agency
NPT	National Pipe Thread
SMACNA	Sheet Metal and Air Conditioning Association
OS&Y	Outside Screw and Yoke
STL.WG	United States Steel Wire, Washburn and Moen, American Steel And Wire Companies and Roebling Gauge
USS GAUGE	United States Standard Gauge
WOG	Water, Oil, Gas
WSP	Water Steam Pressure

"Federal Specification" A Federal specification issued by the Federal Supply Services Administration, Washington, D.C.

ARTICLE 13. SUBSURFACE EXPLORATION

13.01 Where applicable, and if provided by the City, boring logs, probes and related information contain data regarding subsurface conditions at the dates and location indicated. This information is shown for the convenience of the Contractor, but is not guaranteed to be correct or complete, and it is not warranted that it represents a true or approximately true picture of the actual subsurface conditions to be encountered.

ARTICLE 14. CONTRACT AND CONTRACT DOCUMENTS

14.01 The City's record copy of the Contract Documents shall control and shall be effective and binding on the Contractor. In the event that any provision in the Contract Documents conflict with any other provision therein, the priority of the documents shall be in accordance with Section 1.2 of the Contract.

ARTICLE 15. SHOP DRAWINGS, CATALOG CUTS AND SAMPLES

15.01 The Contractor shall promptly submit to the Project Engineer five copies of each submittal prepared in accordance with the approved schedule. After examination of such submittal by the Project Engineer and the return thereof, the Contractor shall make such corrections to the submittal as have been indicated and shall furnish the Project Engineer with five corrected copies. If requested by the Project Engineer, the Contractor must furnish additional copies. Regardless of corrections made on, or approvals given to, such submittal by the Project Engineer, the Contractor shall nevertheless be responsible for the accuracy of such submittal. The Contractor shall also be responsible for the submittal's conformity to the Submittal and Specifications, unless the Contractor notifies the Project Engineer in writing of any deviations at the time of submission of the submittal.

15.02 Submittal of all fabricated work shall be submitted to the Project Engineer and no work shall be fabricated unless it is done at the Contractor's own risk until approval has been given by the Project Engineer and City.

15.03 The Contractor shall submit all submittals on dates sufficiently in advance of requirements in order to enable the Project Engineer and City to properly review them. This period shall include time to correct, resubmit and recheck, if necessary, and no claim for delay will be granted to the Contractor because of the Contractor's failure in this respect. The Project Engineer and City will be given a minimum of fourteen (14) consecutive calendar days for the initial review of each submitted submittal.

15.04 All submitted submittals must bear the approval stamp of the Contractor and reference conformance to the applicable provisions of the Specifications as evidence that the Contractor has checked the drawings. Any drawings submitted without this stamp of approval will not be considered and will be returned to the Contractor for resubmission. If the submittals show variations from the requirements of the Contract Documents because of standard shop practice or other reason, the Contractor shall make specific mention of such variation in the letter of submission to the Project Engineer. If the variation is acceptable to the Project Engineer and City, suitable action may be taken for proper adjustment. If not acceptable, the Contractor shall not be relieved from the responsibility for executing the work in accordance with the Contract Documents, although such submittals had been approved.

15.05 Where submittals are submitted by the Contractor that indicate a departure from the Contract Drawings which the Project Engineer deems to be a minor adjustment and in the City's interest and not involving a change in the Contract price or an extension in time, then the Project Engineer may approve the drawings. Such approval will contain, in substance the following:

> The modification shown on the attached drawings is approved in The interest of the City to effect an improvement for the project and is ordered with the understanding that it does not involve any change in the Contract price or time. The modification is generally subject to all Contract stipulations and covenants and it is without prejudice to any and all rights of the City under the Contract.

The approval of submittals will be general and shall not relieve the Contractor from the responsibility for

adherence to the Contract nor of the responsibility for any errors that may exist.

15.06 The Contractor agrees to hold the Project Engineer and the City harmless and to defend them against damage or claims for damages arising out of injury to others or to property of third parties which result from errors on shop or working drawings, whether or not they have been approved by the Project Engineer and/or the City.

15.07 Working Drawings. When required by the Contract or when ordered to do so by the City Representative, the Contractor shall prepare and submit 4 copies of the working drawings to the City Representative for review. These drawings shall be submitted sufficiently (at least 15 consecutive calendar days) in advance of the proposed use, to allow for their review, and any necessary revisions, without delay of the Project. No work covered by these working drawings shall be done until the drawings have been submitted to the City Representative for review and the City Representative's comments have been appropriately taken into account and implemented. The furnishing of the working drawings shall not serve to relieve the Contractor of any part of its responsibilities under the Contract.

ARTICLE 16. CONTRACTOR'S TITLE TO MATERIALS

16.01 No material, supplies or equipment for the work shall be purchased by the Contractor, or by any Subcontractor, subject to any chattel mortgage or under any conditional sale or other agreement by which an interest therein or in any part thereof is retained by the seller or supplier. The Contractor warrants good title to all material, supplies and equipment installed or incorporated in the work. The Contractor further warrants that, upon completion of all work, he will deliver the premises, together with all improvements and appurtenances constructed thereon, to the City free of any claims, liens, charges or encumbrances. The Contractor further warrants that neither the Contractor nor any person, firm or corporation furnishing any material, labor or equipment for any work covered by this Contract shall have a right to lien upon the premises or any improvement or appurtenance thereon.

ARTICLE 17. "OR EQUAL" CLAUSES

17.01 Unless otherwise provided for in the ITB/RFP Documents, the Contract will be on the basis of material and equipment described on the ITB/RFP Documents without consideration of possible substitute or "equal" items. However, subsequent to award of the Work, whenever a material or article required is specified or shown on the plans by using the name of a proprietary product or of a particular vendor or manufacturer, any materials or article which, in the sole discretion of the Project Engineer, is equal or superior to the specified item to material, may be considered an "equal." Requests for substitutions must be supported by evidence such as technical data, test results, or other pertinent information that demonstrate that the substitute offered is equal or better than the specification's requirements. Such items shall not be purchased or installed without the written approval of the Project Engineer. In all cases, only new materials shall be used for the work.

ARTICLE 18. REPRESENTATIONS OF THE CONTRACTOR

18.01 The Contractor represents and warrants:

(a) That he is financially solvent and that he is experienced and competent to perform the type of work or to furnish the plant, material or equipment to be performed or furnished by him; and

(b) That he is familiar with all Federal, State and municipal laws, ordinances, orders and regulations which may in any way affect the work of those employed therein, including but not limited to any special acts relating to the work or to the project of which it is a part; and

(c) That such permanent and temporary work required by the Contract Documents to be done can be satisfactorily constructed and be used for the purpose for which it is intended, and that such construction will not injure any person nor damage any property; and

(d) That he has carefully examined the drawings, specifications and addendum (or addenda) if any, and the site of the work, and that, from his own investigations, he has satisfied himself as to the nature, quality and quantity of surface and subsurface materials likely to be encountered; of the character of equipment required for the work; of other facilities needed for the performance of the work; of the general and local conditions and of all other materials which in any way may affect the work and its performance; and

(e) That he is aware of the hazards involved in the work and the danger to life and property both evident and inherent and that he will conduct the work in a careful and safe manner without injury to persons or property; and that he can provide the necessary equipment, labor and materials to complete the contract work within the specified contract duration.

ARTICLE 19. PROTECTION OF WORK AND PROPERTY (EMERGENCY)

19.01 The Contractor shall at all times safely guard and protect the City's property from injury or loss in connection with this contract. He shall at all times safely guard and protect his own work and that of adjacent property from damage. The Contractor shall replace or make good any such damage, loss or injury unless such is caused directly by errors contained in the Contract or by the City or his duly authorized representatives.

19.02 In case of an emergency that threatens loss or injury of property and/or safety of life, the Contractor will be allowed to act in a diligent manner without previous instructions from the City. He shall notify the City immediately thereafter.

19.03 Where the Contractor has not acted but has notified the City of an emergency threatening injury to persons or damage to the work or to any adjoining property, he shall act as instructed or as authorized by the City.

19.04 The amount of reimbursement claimed by the Contractor on account of any emergency action shall be determined in the manner provided elsewhere in the Contract Documents.

ARTICLE 20. WEATHER CONDITIONS

20.01 In case of temporary suspension of the work, or during inclement weather, or whenever the City shall direct, the Contractor shall carefully protect his work and materials against damage or injury from the weather. The Contractor shall cause all his subcontractors to provide the same protection for their portion of the work. If, in the opinion of the City, any work or material was damaged or injured by reason of failure on the part of the Contractor, or any of his subcontractors, so to protect his work, or otherwise damaged by the negligence of the Contractor or any of his subcontractors or their agents or servants, or is otherwise defective, such materials shall be removed and replaced at the expense of the Contractor.

20.02 For projects involving asphalt paving, all work shall be temporarily suspended, upon direction of the City, when the Contractor can no longer properly pave exposed areas in accordance with the plans and specifications during inclement weather or during winter months.

ARTICLE 21. SUBLETTING

21.01 The Contractor is not to assign, transfer or sublet the Contract in whole or in part to any other person or persons without written permission from the City. The Contractor cannot abridge the terms of the Contract in any way without written permission of the City. The Contractor must keep the Contract in his name and control until all work is completed the City has issued a Notice of Project Acceptance for the Project. The Contractor shall likewise not assign any of the money payable under this Contract. Approval by the City of the subletting of any part of the work shall not, under any circumstances, relieve the Contractor or his Surety of any liabilities or obligations under the terms of the Contract Documents.

21.02 The Contractor shall be as fully responsible to the City for the acts and omissions of his subcontractors, and of the persons either directly or indirectly employed by them, as he is for the acts and omissions of persons directly employed by him. Should any subcontractor violate any of the terms of these specifications, the City may, at its option, require the Contractor to end and terminate such subcontract.

21.03 The Contractor shall cause appropriate provisions to be inserted in all subcontracts relative to the work to bind subcontractors to the Contractor by the terms of the Contract and the General Conditions and other provisions of the Contract Documents. This language is to be applicable insofar as necessary to the work and is to give the Contractor the same power over as regards terminating any subcontract as the City may exercise over the Contractor under any provisions of the Contract Documents.

21.04 Nothing contained in this Contract shall create any contractual relation between the City and any subcontractor.

ARTICLE 22. SUBSTITUTE BOND

22.01 If, at any time, the Contractor's Surety or Sureties, or the carriers of other insurance herein specified to be written, become insolvent or, in a reasonable judgment of the City, become unsafe or unsound then, upon five days written notice from the City to the Contractor, the Contractor shall substitute such Performance and Labor and Material Bond or insurance with such other Surety or carrier in such form as shall be acceptable to the City. Any additional premium caused by such substitution shall be paid for by the Contractor. No further payments will be deemed due nor will be made until the new Surety or Sureties have furnished such an acceptable bond to the City.

ARTICLE 23. RIGHT TO WITHHOLD PAYMENTS

23.01 The City may withhold from the Contractor so much of any approved payments due as may in the judgment of the City be necessary to:

1. Assure the payment of any lien, stop notice or claim, filed with the City for work, labor, or materials done, performed or delivered and used in the prosecution of the work herein provided for (whether in strictly legal form or otherwise)
2. Protect the City from loss due to defective work not remedied or through any improper or defective machinery, implements or appliances used by the Contractor or for failure of the Contractor to fully comply with any requirements of the Contract
3. Protect the City from loss due to injury to persons or damage to work or property of other contractors, subcontractors or others caused by the act' or neglect of the Contactor or any subcontractors.

23.02 The City shall have the right, as agent for the Contractor, to apply any amounts so withheld in such manner as the City may deem proper to satisfy such claims or to secure such protection. Such applications of such money shall be deemed payments to the account of the Contractor.

23.02 Notwithstanding the above, the Contractor, in conformance with Section 49-41a of the Connecticut General Statutes, as revised, shall, within 30 consecutive calendar days after any given Contract payment to the Contractor by the City, pay any amounts due any subcontractor, whether for labor performed or materials furnished.

ARTICLE 24. PAYMENTS BY CONTRACTOR

24.01 The Contractor, in conformance with Section 49-41a of the Connecticut General Statutes, as revised, shall, within 30 consecutive calendar days after any given Contract payment to the Contractor by the City, pay any amounts due any subcontractor, whether for labor performed or materials.

ARTICLE 25. NOTICE OF WARNING

25.01 If the Contractor shall fail to make prompt payment to persons supplying labor or materials for the work; or refuse or fail to supply enough properly skilled workmen or proper materials; or refuse or fail to prosecute the work or any part thereof in accordance with the Contract Documents or with such diligence as will insure its completion within the period herein specified (or any duly authorized extension thereof); or fail to complete the work within said period; or refuse to regard laws ordinances, codes or instructions of the City then the City shall forward A Notice of Warning to the Contractor by registered mail at the address given in the Contract. In the event the Contractor fails to comply with said Notice of Warning within five (5) consecutive calendar days from receipt thereof, the City shall have the right to terminate the Contract.

ARTICLE 26. PROGRESS MEETINGS

26.01 Progress meetings will be held weekly at locations, dates and times selected by the City for the purpose of reviewing, scheduling and coordinating the Project's progress as well as other matters.

ARTICLE 27. PERMITS

27.01 The Contractor shall keep himself fully informed of all existing and current Municipal, State or Federal

ordinances, regulations or laws in any way limiting or controlling the operations or actions of those engaged in the work or affecting the materials supplied to or by them. The Contractor shall at all times observe and comply with all such valid and binding ordinances, laws or regulations. The Contractor shall protect and indemnify the City and its representatives against any claims arising from, or based upon, any violation of the same.

ARTICLE 28. RIGHT TO USE THE WORK

28.01 The City may enter upon the use of the whole or of any portion of the work, which may be in condition to use, at any time before its issuance of a Notice of Project Acceptance by the City. Such use shall not constitute, or be evidence of, acceptance by the City or by the Project Engineer of the whole or any part of the material furnished or work performed under the Contract.

ARTICLE 29. PROVISIONS REQUIRED BY LAW

29.01 Each and every provision of law and clause required to be inserted in this Contract shall be deemed to be inserted herein and the Contract shall be read and enforced as though it were included herein. If, through mistake or otherwise, any such provision is not inserted, then, upon application of either party, the Contract shall forthwith be physically amended to make such insertion.

29.02 If this Contract contains any unlawful provisions not an essential part of the general structure of the Contract, and which shall not appear to have been a controlling or material inducement in the making thereof, the same shall be deemed stricken from the Contract without affecting the binding force of the remainder.

ARTICLE 30. WAIVER

30.01 Neither the inspection by the City or Project Engineer or by any of their employees; nor any order, measurement or certificate by the Project Engineer; nor any order by the City for the payment of any money; nor any payment for or acceptance of the whole or any of the work by the Project Engineer for the City; nor any extension of time; nor any possession taken by the City or its employees shall operate as a waiver of any provision of this Contract or of any power herein reserved to the City. Nor shall such action waive any right to damages herein provided. Nor shall any waiver of any breach of the Contract constitute a waiver of any other or subsequent breach. Any remedy provided in this Contract shall be construed as cumulative - i.e. in addition to each and every other remedy herein provided.

ARTICLE 31. USE OF PREMISES AND REMOVAL OF DEBRIS

31.01 The Contractor expressly undertakes at his/her own expense:

1. To take every precaution against injuries to persons or damage to property.
2. To store apparatus, materials, supplies and equipment in such orderly fashion at the site of the work as will not unduly interfere with the progress of the work or the work of any other contractor.
3. To place upon the work or any portion thereof only such loads as are consistent with the safety of that portion of the work.
4. To frequently clean up all refuse, rubbish, scrap materials and debris caused by the Contractor's operations to the end that at all times the site of the work shall present a neat, orderly and work manlike appearance.
5. To remove all surplus material; falsework; temporary structures including foundations thereof; plant of any description and debris of any nature resulting from the Contractor's operations before Final Completion.
6. To put the site in a neat orderly condition, to remove all clean-up materials, to remove such materials from the construction site, and to deposit them in a refuse disposal site at his/her expense.
7. To effect all cutting, fitting or patching of work required to make the same conform to the Drawings and Specifications and, except with the consent of the City, not to cut or otherwise alter the work of any other contractor.

ARTICLE 32. RIGHT-OF-WAY AND SUSPENSION OF WORK

32.01 Land and rights-of-way for the purposes of this Contract will be furnished by the City to the extent shown on the Drawings. The City will use diligence in acquiring said land and rights-of-way as speedily as possible. However, it is possible that not all land and rights-of-way will be obtained as herein contemplated before construction

commences. In such case the Contractor shall begin the work upon such land and rights of-way as the City may have previously acquired. No claim for damages whatsoever will be allowed by reasons of the delay in obtaining the remaining lands and/or rights-of-way. Should the City be prevented or enjoined from proceeding with the work, or from authorizing its prosecution, either before or after the commencement, by reason of litigation or by reason of its inability to procure any lands or rights-of-way for the said work, the Contractor shall not be entitled to withdraw from the Contract because of these occurrences. In the event of any of the above occurrences, the time for completion of the work may be extended in the manner provided elsewhere in the Contract Documents.

ARTICLE 33. CONSTRUCTION EQUIPMENT AND MACHINERY

33.01 The Contractor shall furnish and maintain, at its own cost and risk, all tools, apparatus and appliances, hoists and/or cranes and power for same, scaffolding, runways, ladders, temporary supports and bracing and all other similar work or material necessary to insure speed, convenience and safety in the execution of its Contract. All such items shall be subject to approval of the City, upon the Project Engineer's recommendation, as to general stability, type and location, but the responsibility for proper design, strength and safety shall remain with the Contractor. All such items shall comply with OSHA regulations and all other applicable codes, statutes, rules and regulations.

33.02 The Contractor shall provide all drains, drainage, ditches and pumping apparatus (including power and attendance for same) that may be necessary to keep all excavations and sub-grade work free from water.

33.03 All machines, equipment, trucks and vehicles used in the prosecution of the work, or in connection therewith, shall be in proper working condition at all times. Only gasoline, electric or diesel engines shall be used for the power in operating equipment.

33.04 The Contractor shall be responsible for curtailing noise, smoke, fumes or other nuisances resulting from the operations. The. Contractor shall, upon written notification from the City or Project Engineer, make any repairs, replacements, adjustments or additions and furnish mufflers when necessary to' fulfill requirements. No oil tanks for fueling equipment shall be stored less than one hundred (100) feet from any watercourse.

33.05 All costs involved in complying with the stipulations outlined shall be included in the various prices in the bid/proposal.

ARTICLE 34. CONTRACTOR'S GENERAL GUARANTEE/WARRANTY PERIOD

34.01 The Contractor's General Warranty Period shall commence on the date of issuance of a Notice of Project Acceptance by the City and during such time Contractor shall guarantee his work is free from faulty materials and workmanship.

34.02 Within the Contractor's General Warranty Period, any portion of the Work shall, in the opinion of the City, require repairing, replacing or rebuilding, the Contractor shall start such repairs within five (5) consecutive calendar days after receipt of notice from the City. If the Contractor shall fail to or neglect to start the repairs within five (5) consecutive calendar days, the City may employ such other person or persons as it may deem proper to make such repairs. The City will charge the Contractor the cost thereby incurred. Nothing herein provided shall limit the liability of the Contractor or Surety to the City for non-performance of the Contractor's obligations at any time.

34.03 The Payment and Performance Bonds, and Material Bond, if required, shall remain in full force and effect through the Contractor's General Warranty Period.

34.04 Deficiencies in the Work discovered after the date of the issuance of a Notice of Project Acceptance by the City shall be deemed General Warranty Work. Such deficiencies shall be corrected by Contractor under this Article.

34.05 The Contractor shall remedy any defects due to faulty materials or workmanship within thirty (30) consecutive calendar days of receiving notice thereof by the City. Should the Contractor fail to correct the deficiency within thirty (30) consecutive calendar days, the City may perform the corrective work and Contractor shall be responsible for all reasonable costs incurred by City in performing such correction.

ARTICLE 35. PROCEDURE IN CONSTRUCTION

35.01 The Contractor shall start work and carry it on at such point or points and in such order of precedence and at times and seasons as may be determined by the City. The Contractor shall complete the various portions of the work in accordance with the schedule approved by the City.

35.02 A complete organization, complement of equipment and ample materials shall be on hand before actual work commences. The Contractor shall so arrange his/her organization, plant, equipment and materials so that construction operations will be carried on continuously. The Contractor will not be permitted to reduce the force of workers or remove any equipment from the work if such reduction or removal impairs the progress of the work.

35.03 In the event that the City awards more than one contract to the Contractor, the Contractor shall be required to prosecute the work on each contract simultaneously. The Contractor will be required to maintain a separate and independent organization and staff, labor forces and machinery on each contract in order to complete the work within the time set forth for the respective contracts.

ARTICLE 36. APPRENTICES

36.01 Apprentices shall be permitted to work only under a bonafide apprenticeship program registered either with the State Apprenticeship Council or with the Bureau of Apprenticeship, United States Department of Labor.

ARTICLE 37. CONTROL OF WORK

37.01 The Contractor shall abide by all orders, directions and requirements of the Project Engineer in the performance of the work.

37.02 In the event the Contractor is not personally present at the project site, he/she shall have a superintendent present at the site that possesses more than adequate communication skills. The superintendent must have proper knowledge of all applicable project requirements and conditions and must have authority to fully represent the Contractor with power to act and to be the recipient of orders and to obey all the instructions of the Project Engineer and/or the City. If proper provision for the carrying out of this stipulation is not made, then the Contractor shall be held responsible for the execution of such orders and instructions which the Project Engineer and/or City may deem necessary to issue to any employee regarding the work. The City or Project Engineer may order the work stopped until a duly authorized representative of the Contractor appears and receives instructions. No claims for damages or for an extension time in which to complete the work because of such delay will be allowed the Contractor.

37.03 In all cases, the Project Engineer shall determine classifications, quantities, quality, acceptability and fitness of the several kinds of work that are to be paid for under the Contract. The Project Engineer and/or City shall interpret the Plans and Specifications and any extra work orders and shall determine all questions in relation to said work and to the construction thereof.

37.04 The Contractor shall not employ any plant, equipment, material, methods or workers to which the City objects. The Contractor shall not remove any plant, materials, equipment or other facilities from the site of the work without the City's permission.

ARTICLE 38. CITY'S CONTROL NOT LIMITED

38.01 The enumeration in this Contract of particular instances in which the opinion, judgment, discretion or determination of the City shall control, and in which work shall be performed to the City's satisfaction and approval or inspection, shall not imply that only matters similar to those enumerated shall be so governed. Without exception all the work shall be so governed and performed.

ARTICLE 39. AUTHORITY AND DUTIES OF INSPECTORS

39.01 Inspectors shall be authorized to inspect all work done and all materials furnished. Such inspection may extend to all parts of the work and to the preparation or manufacture of the materials to be used. In the case of any dispute

arising between the Contractor and an Inspector as to materials furnished, or as to the manner of performing the work, the Inspector shall have the authority to reject material or to suspend the work until the question at issue can be referred to, and decided by, the City.

39.02 The Inspector shall not be authorized to revoke, enlarge, relax or release any requirements of these Specifications nor to approve or accept any of the provisions of the Contract Documents. The Inspector shall in no case act as a foreman or perform other duties for the Contractor. The Inspector shall not interfere with the management of the work by the Contractor. Any advice, which the Inspector may give the Contractor, shall not be construed as binding the City or the Project Engineer in any way. Such advice will not release the Contractor from the fulfillment of the terms of the Contract.

ARTICLE 40. INSPECTION AND CORRECTION OF WORK

40.01 All material furnished and work done will be inspected by the Project Engineer. The Project Engineer shall condemn any work or materials not in accordance with the Contract Documents. All condemned work and materials shall be removed and other work and materials furnished in accordance therewith. All materials rejected by the Project Engineer as being unfit for the particular clause in the Specifications to which they refer shall be removed from the site. Removal shall be within twenty-four (24) hours or shorter if the Project Engineer so directs. Should the Contractor refuse to remove the work and materials as ordered, then the Project Engineer may stop the Contractor from proceeding with the work. The City may supply workers and materials to remove the condemned work and materials at the expense of the Contractor.

40.02 Failure on the part of the Project Engineer, or any authorized Inspectors, to detect inferior work or materials, and to condemn the same, shall not be construed to imply an acceptance of such work or materials. Such failure shall not be construed as barring the City, at any subsequent time, from the recovery of such sum of money from the Contractor which may be required to construct or to build anew all portions of the work in which fraud was practiced, improper work executed or improper material furnished and built into the work. The Contractor shall furnish all necessary facilities should it be desirable at any time to make an examination of the work already completed.

40.03 If any work is found defective in any respect, the expense of the examination must be borne by the Contractor. If all work is found satisfactory, the expense of the examination will be paid for in the manner provided for elsewhere in the Contract Documents. If all work is found satisfactory, the expense of the examination will be paid for in the manner provided elsewhere in the Contract Documents.

40.04 If, in the opinion of the City, it is undesirable to reconstruct or correct any portion of the work injured or not performed in accordance with the Contract Documents, the Contractor's compensation hereunder shall be reduced by such amount as may be equitable under all circumstances.

ARTICLE 41. CONTRACTOR'S OBLIGATIONS

41.01 The Contractor shall and will, in good workmanlike manner, do and perform all work and furnish all supplies and material, machinery, equipment, facilities and means, except as herein otherwise expressly specified, necessary or proper to perform and complete all work required by this Contract. All to be accomplished within the time specified; in accordance with the provisions of this Contract and Specifications; in accordance with the Plans and Drawings pertaining to this Contract; in accordance with any and all supplemental Plans and Specifications and in accordance with the directions of the City as given from time to time during the progress of the work. The Contractor shall furnish, erect, maintain and remove such construction plant and such temporary work as may be required. The Contractor alone shall be responsible for the safety, efficiency and adequacy of the plant, appliances and methods. The Contractor shall be responsible for any damage, which may result from their failure or from their improper construction, maintenance or operation. The Contractor shall observe, comply with and be subject to all terms, conditions, requirements and limitations of the Contract and the Specifications. The Contractor shall do, carry on and complete the entire work to the satisfaction of the City.

41.02 The Contractor shall be solely responsible for all the work and shall provide all precautionary measures necessary for preventing injury to persons or damage to property. All injury or damage, of whatever nature, resulting from the work, or resulting to persons, from whatever cause, shall be the responsibility of, and shall be borne and sustained by, the Contractor. The Contractor shall hold the City and Project Engineer, or their agents, harmless and shall defend and indemnify the City and Project Engineer, or their agents, against damages, or claims for

damages, due to injury to .persons or to property arising out of the execution of work and for damages to material furnished for the work; for infringement of inventions, patents and patent rights used in doing the work; for damages arising out of the use of any improper material, equipment or labor used in the work and for any act of omission by any subcontractors therein. The Contractor shall bear all losses including, but not limited to, losses sustained on account of the character, quality or quantity of any part or all of the work, or because the nature of the land in or on which the work is done being different from what may have been estimated or indicated, or on account of the weather, elements or other causes, except for acts beyond the reasonable control of the Contractor.

ARTICLE 42. TOILET ACCOMMODATIONS AND DRINKING WATER

42.01 The Contractor shall provide necessary sanitary toilet accommodations and drinking water for the workers. Separate facilities shall be provided for female workers.

ARTICLE 43. SAFETY AND HEALTH REGULATIONS

43.01 These documents, and the joint and several phase of construction hereby contemplated are to be governed at all times by applicable provisions of the Federal law(s), including, but not limited to, the latest amendments of the following:

1. Williams-Steiger Occupational Safety and Health Act of 1970, Public Law 91-956.
2. Part 1910 - Occupational Safety and Health Standards; Chapter XVII of Title 29, Code of Federal Regulations.
3. Part 1926 - Safety and Health Regulations for Construction, Chapter XVII of Title 29, Code of Federal Regulations.

43.02 This project is subject to all of the Safety and Health Regulations (see 29 CFR 1926m as amended) as promulgated by the U. S. Department of Labor on June 24, 1974. The Contractor shall thoroughly familiarize him/herself with the requirements of these regulations.

ARTICLE 44. OWNERSHIP OF DRAWINGS AND SPECIFICATIONS

44.01 Subsequent to award of the contract, with the exception of the Contractor's executed set, all drawings and specifications are the property of the City. The City shall furnish one (1) paper and one electronic set, in PDF Format, of the construction drawings and specifications to the Contractor without charge. No additional sets will be furnished ~~ined~~ by the City. Such drawings and specifications are not to be used in other work.

ARTICLE 45. RESIDENTS' PREFERENCE IN WORK ON OTHER PUBLIC FACILITIES

45.01 Except to the extent prohibited by Federal or State statute, the Contractor shall comply with the provisions of Section 31-52a of the General Statutes of the State of Connecticut, Revision of 1967, a part of which is quoted as follows:

Section 2(b) each contract for any such project covered by this section under the supervision of the State or any of its agents shall contain the following provision:

"In the employment of mechanics, laborers or workmen to perform the work specified herein, preference shall be given to residents of the State who are and, continuously for at least six months prior to the date hereof, have been residents of the State, and if no such person is available, then to residents of other states."

ARTICLE 46. LISTING OF EMPLOYMENT OPENING

46.01 This Contract is executed subject to the Governor's Executive Orders No. 3 and No. 17, which are hereby made a part of this agreement. The Governor's Executive Order No, 17 requires, inter alia, that all contractors and subcontractors shall list all employment openings with the office of the Connecticut State Employment Service in the area in which the work is to be performed or where the services are to be rendered. Failure of the Contractor to conform to the requirements of the Governor's Executive Orders No. 3 and No. 17, and any orders, rules, or regulations issued pursuant thereto, shall be a basis for termination of this agreement by the City.

ARTICLE 47. SERVICE OF PROCESS

47.01 The Contractor, if not a resident of the State of Connecticut, or, in the case of a partnership, the partners, if not residents, hereby appoint(s) the Secretary of State of the State of Connecticut, and successors in office, agent for service of process. Such service, as arising out of, or because of, this Contract. Such appointment shall in effect throughout the life of this Contract and for a period of six (6) years thereafter.

ARTICLE 48. CITY OF WATERBURY ORDINANCE CHAPTER 34

48.01 For projects subject to the City's GOOD JOBS ORDINANCE (Code of Ordinances Chapter 34), the provisions thereof are in addition to any requirements of these General Conditions, and to any requirements of all funding sources for the Project, but only to the extent permitted by federal and state law.

ARTICLE 49. WAGE RATES

49.01 The wages paid on an hourly basis to any mechanic, laborer or workman employed upon the work herein, contracted to be done shall be at a rate equal to the rate customary or prevailing for the same work in the same trade or occupation in the City of Waterbury. The amount of payment or contribution paid or payable on behalf of each such employee to any employee welfare fund (as defined in Section 31-53 of the Connecticut General Statutes) shall also be at a rate equal to the rate customary or prevailing for the same work in the same trade or occupation in the City of Waterbury. If the Contractor is not obligated by agreement to make such payment or contribution on behalf of such employees to any such welfare fund, the Contractor shall pay to each employee the amount of payment of contribution for his classification on each payday as part of his wages.

49.02 For Prevailing Wage Rate projects, the Contractor shall furnish to the Project Engineer certified copies of payrolls showing the names of its employees working on the Project, the specific days and hours and number of hours that each of them has spent in doing so, and the amount paid to each person for said work.

ARTICLE 50. SCHEDULE AND POSTING OF MINIMUM WAGE RATES

50.01 Where applicable, the Contractor, and every subcontractor, shall post a legible copy of the Minimum Wage Rates and Classifications included in the Contract Documents. This posting shall be in a prominent and accessible place at the site of the work (See ARTICLE 49). The schedule shall show all determined minimum wage rates for the various classes of laborers and mechanics to be engaged to work on the project. The schedule shall also show all deductions, if any, required by law to be made from wages actually earned by the laborers and mechanics so engaged.

50.02 The rates established by each schedule are the minimum and all employees shall be paid no less than the established rate for each trade or occupation. In the case of a conflict between schedules in anyone trade or occupation, the higher rate listed shall control and such higher rate shall be considered to be the minimum.

50.03 State: Where applicable, the minimum rates of wages and schedule of supplements to be provided for the various trades shall be in accordance with the Prevailing Wage rate Schedule included herein. The rate of wages and schedule of supplements for any trade not appearing or mentioned in this schedule shall be in accordance with the prevailing rates established for that particular trade by the Connecticut Department of Labor or by the Comptroller or other analogous officer of the City of Waterbury. Minimum wages required to be paid shall include supplements for hospital, surgical, medical or other benefits as determined by all applicable section of the General Statutes of the State of Connecticut. The Contractor shall file a Wage Certification Form with the Labor Department of the State of Connecticut prior to beginning work on the site.

50.04 If for any reason and at any time, the Federal Government, the State of Connecticut, or the City of Waterbury, shall in any way supplement, change or amend the Prevailing Wage Rates Schedule, then the Contractor or subcontractor shall follow such Schedule as supplemented, changed or amended. In no case shall the Contractor or subcontractor be entitled to any additions, compensations or extras because of any supplement, change, amendment or predetermination of the Prevailing Wage Rate Schedule.

50.05 Federal Wage Rates, where applicable, shall be applied in any case where they exceed the State of Connecticut Minimum Wage rates or in any case where a rate has not been established by the State.

ARTICLE 51. COMPUTATION OF WAGES AND OVERTIME COMPENSATION

51.01 The Contractor and each subcontractor shall comply with all applicable Federal, State and local laws or ordinances with respect to the hours worked by laborers and mechanics engaged in work on the project. The Contractor and all subcontractors shall also comply with all applicable Federal, State and local ordinances with respect to compensation for overtime hours worked by laborers and mechanics engaged in work on the project.

ARTICLE 52. WAGE UNDERPAYMENTS AND ADJUSTMENTS

52.01 In addition to any applicable Federal or State regulations, the City may, in the case of underpayment of wages to any worker on the project under this Contract by the Contractor or by any subcontractor, withhold an amount from payments due the Contractor. Said amount to be sufficient to pay such worker the difference between the wages required to be paid the worker under this Contract and the amount actually paid the worker for the total number of hours worked. The City will disburse such amount so withheld by it for, and on behalf of, the Contractor to the employee to whom the amount is due. Such monies withheld pursuant to this article will be in addition to percentages to be retained pursuant to other provisions of the Contract.

ARTICLE 53. CONFORMANCE OF WORK

53.01 The work, during its progress and at its completion, shall conform to the work as shown on the drawings and to the directions given by the Project Engineer from time to time. The work shall be subject to such modifications or additions as the Project Engineer may deem necessary during the execution of the work. In no case will any work be paid for which is performed in excess of such requirements. The work shall also be accomplished in accordance with the Specifications.

ARTICLE 54. DIMENSIONS AND SCHEDULES

54.01 The Contractor will be required to check all dimensions and quantities shown on the drawings or schedules given to him by the Project Engineer. The Contractor shall notify the Project Engineer of all errors therein which he may discover by examining and checking the same. The Contractor shall not take advantage of any error or omission in these specifications, drawings and schedules. The Project Engineer will furnish all instructions should such error or omission be discovered and the Contractor shall carry out such instructions as if originally specified.

ARTICLE 55. PROTECTION FROM STORM

55.01 Should storm warnings be issued, the Contractor shall take every practicable precaution to minimize danger to persons, to the work and to adjacent property. These precautions shall include closing all openings; removing all loose materials, tools and/or equipment from exposed locations; and removing or securing scaffolding and other temporary work.

55.02 The Contractor shall provide measures to prevent stormwater runoff from entering excavation areas.

ARTICLE 56. PROTECTION OF WORK AND MATERIALS

56.01 The Contractor shall assume full responsibility for the protection of the work and materials during the progress of construction, and until issuance of a Notice of Project Acceptance by the City, against loss or damage by any cause or agency. The Contractor shall, at his own expense, provide efficient means for such protection.

ARTICLE 57. FURTHER SAFEGUARDS

57.01 In case the City or the Project Engineer shall at any time be dissatisfied with the means provided by the Contractor for any aforesaid protection of the work or of any other properties, the City or the Project Engineer may order additional measures and precautions for that purpose. The Contractor, at his own expense, shall immediately comply with such orders and carry them out.

ARTICLE 58. FIRST AID TO INJURED

58.01 The Contractor shall keep on site, ready for immediate use, all articles necessary for giving first aid to injured employees. He shall also provide arrangements for the immediate removal and hospital treatment of any injured employee who may require such treatment.

ARTICLE 59. CONFORMANCE WITH DIRECTIONS

59.01 The Project Engineer may make alterations in the lines, grades, forms, dimensions or materials to be used in the project, or any part thereof, either before or after the commencement of construction. If such alterations diminish the quantity included in any item of work to be done and paid for at a unit price, the Contractor shall have no claim for damages or for anticipated profits on the work thus dispensed with. If the changes increase the quantity included in any such item, such increase shall be paid for at the stipulated unit price.

ARTICLE 60. COMPETENT HELP TO BE EMPLOYED

60.1 The Contractor shall employ an experienced foreman, craftsmen and other workmen competent in the work in which they are to be engaged. All work shall be accomplished by able, skilled and competent personnel. If any person employed on the work by the Contractor shall appear to be incompetent or unreliable in any way, he shall be discharged immediately upon the request of the Project Engineer and shall not be again employed upon the work.

ARTICLE 61. STREETS AND SIDEWALKS TO BE KEPT OPEN

61.01 The Contractor shall keep the street and sidewalks in which he may be working open at all times to pedestrian and vehicular traffic. If, in the opinion of the City or the Project Engineer, the interest of abutters and the public requires it, the Contractor shall bridge or construct plank crossings over trenches at street crossings, roads or private ways. The Contractor shall conduct his work for this project in such manner as the City or the Project Engineer may direct from time to time. No sidewalk shall be obstructed where it is possible to avoid it. No additional payment shall be made to the Contractor for such work.

61.02 The Contractor shall provide all necessary fire crossings at principal intersections or ways usually traveled by fire apparatus. The Contractor shall make provision for the passage of fire apparatus to the work area, including along the line of pipeline installations.

61.03 All work shall be conducted in such a manner as to create minimum interference with existing businesses and commercial establishments. Such establishments shall be allowed to conduct business at all times during the construction.

61.04 The Contractor shall be responsible for taking all steps necessary to minimize dust emanating from the project and for keeping the streets free of the accumulation of sand and other similar materials.

ARTICLE 62. LIGHTS, BARRIERS, FENCES, WATCHMEN AND INDEMNITY

62.01 The Contractor shall put up and maintain such barriers, fences, lighting, and warning lights, danger warning signals and signs as will prevent accidents during the construction. The Contractor will protect the work and will insure the safety of the personnel and of the public at all times and places. The Contractor shall defend, indemnify and save harmless the City its agents in every respect from any injury or damage whatsoever caused by any act, omission or neglect of the Contractor or his subcontractors, or their servants or agents. Such indemnification shall also include any claims arising out of failure to erect and maintain sufficient railing or fencing as required by Section 13a-111 of the Connecticut General Statutes. The fact that the City may retain control of the premises, or that the City, or its agents, may take action to erect or maintain railings or fencing shall not relieve the Contractor's obligations hereunder.

62.02 The Contractor shall furnish, maintain and use all necessary safety devices; follow all such safety practices in the prosecution of the work and shall adopt, follow and maintain such additional safety measures as, in the opinion of the Project Engineer, are conducive to safe operation by the Contractor. The Contractor shall cause his subcontractor(s) to also adopt, follow and maintain these measures. All of this shall be done at the Contractor's or subcontractor's own expense. The City shall have the right to order any or all work suspended where, in the

opinion of the City, such work is not being carried on in a safe and proper manner or where persons or property are not being properly protected or safeguarded. Such work shall not be resumed until the City's requirements have been met and the City or Project Engineer has directed that work be resumed. Any work so suspended shall be at the Contractor's expense.

62.03 In addition to the above, when as is necessary or when required by the City and/or the Project Engineer, the Contractor shall post signs and shall employ watchmen or flagmen for the direction of the traffic at the site and for excluding unauthorized persons from the site at all times. The Contractor will not be paid additional compensation for this work.

62.04 At all times the Contractor shall be responsible for excluding all persons from land within easement areas and all persons not directly connected with the work or authorized by the City and/or the Project Engineer to be within the project limits.

ARTICLE 63. WORK OUTSIDE REGULAR HOURS

63.01 Night work or work on Saturdays, Sundays or legal holidays requiring the presence of the City, Project Engineer or an Inspector will not be permissible except in the case of emergency and then only upon approval of the Project Engineer. Should it be desired or required for by the City or Project Engineer to operate an organization for continuous night work, the lighting, safety and other facilities that are deemed necessary for performing such night work shall be provided by the Contractor. For night work on Saturdays, Sundays or legal holidays, if any be performed, the Contractor will receive no extra payment. Compensation for such work shall be considered as having been included in the prices stipulated for the appropriate items of work as listed in the bid/proposal.

ARTICLE 64. BUS LINE INTERFERENCE

64.01 Whenever it may be necessary to interfere with any bus lines, notice shall be given to the corporation or agency owning the same. A reasonable amount of time shall be given to said organization in order to rearrange their schedule(s) as may be necessary.

ARTICLE 65. COLD WEATHER WORK

65.01 The Project Engineer will determine when low temperature conditions are unfavorable for work and may order the work, or any portions of it, suspended whenever, in his opinion, the conditions are not such as will insure first class work.

65.02 All methods and materials used in the performance and for the protection of the work in cold weather shall be subject to the approval of the Project Engineer. The Contractor shall take the necessary precautions to protect the work from damage and to remove ice and frost from materials. The removal shall include all necessary heating and the additional removal of any resultant water. The Contractor shall also supply any required sand and/or coarse aggregate required to prevent slipping on ice.

65.03 Except for specific work for which the City has issued a Certificate of Limited Acceptance of the Work, the Contractor shall be responsible for maintaining the project roadways, sidewalks, ramps, driveway aprons and asphalt pathways from the time of contract signing until the issuance of a Notice of Project Acceptance by the City. This responsibility will include snow and ice removal, sanding and mechanical sweeping, and patching with materials approved by the Project Engineer for all roadways, sidewalks, ramps, driveway aprons and asphalt pathways, etc. within the project limits.

65.04 The Contractor shall not continue road excavation after bituminous concrete plants have shut down for the winter. At that time, the Contractor shall request a "winter shutdown". The Contractor shall receive no extra payment for any labor, apparatus, tools or materials necessary to comply with the above requirements, but compensation shall be construed items of work as listed in the bid/proposal form.

ARTICLE 66. BLASTING AND EXPLOSIVES

66.01 No blasting shall be allowed without the Contractor's securing of a permit and permission from the office of the Waterbury Fire Marshall. The Marshall's office is located at 185 South Main Street, Garden Level, (1 Jefferson Square), Waterbury, CT 06702 Phone: (203) 597-3452. The Marshall's office must be advised between 7:00 AM

and 10:30 AM of each day's blasting schedule.

66.02 Explosives for blasting shall be stored, handled and used in accordance with the laws, ordinances and regulations of the State of Connecticut; with all local regulations and with such other additional regulations as the City Representative may require. Blasting shall be conducted so as not to endanger persons or property. The Contractor shall be responsible for, and shall make good any damages of whatever nature caused by blasting or accidental explosions.

66.03 The Contractor shall also adhere to any additional conditions imposed by the Fire Marshall's office. Additionally, the Contractor shall have a pre-blast survey conducted of the adjacent area(s) at no cost to the City.

66.04 Steel or rubber matting shall be used at all blast sites where required by the Bureau of Fire Prevention. Any blast or shot involving more than 99 pounds of explosives must be monitored by the use of seismographs. All seismographs are at the expense of the Contractor. Wire and debris must be cleared from all areas.

66.05 The Contractor shall notify each utility with facilities in proximity to the site of such blasting operations, and any other individuals and entities that may be affected thereby of the Contractor's intention to use explosives; and such notice shall be given sufficiently in advance of any blasting to enable such affected parties to take steps to prevent such blasting from injuring persons or property. Such notice shall not relieve the Contractor of responsibility for damage resulting from its blasting operations.

66.06 Where blasting is required subsequent to commencement of construction, insurance, as required by the City's Risk Manager shall be obtained by the Contractor, and approved by the City's Risk Manager.

ARTICLE 67. TUNNELING

67.01 Tunneling will not be permitted without the express written consent of the City.

ARTICLE 68. RESERVED MATERIALS/EXCAVATED MATERIALS

68.01 Materials excavated from trenches and excavations and those used in the construction of the work shall be deposited in such a manner so that they not endanger persons or the work. Materials shall also be deposited in such a manner that free access may be had at any time to all hydrants and gates near the work. The materials shall be kept trimmed-up so to be of as little inconvenience as possible to public travel or to adjoining tenants. All excavated materials not approved for backfill and/or fill; all surplus material; all rock and all boulders resulting from excavations shall be removed and satisfactorily disposed of off the site by the Contractor at no additional cost to the City.

68.02 Any excavated material not used in the installation of contracted items shall be removed from the site and legally disposed of by the contractor.

ARTICLE 69. OBSTRUCTIONS AND CROSSOVERS

69.01 Whenever any trench or other excavation obstructs pedestrian and/or vehicular traffic in or to any public street, private driveway or property entrance or to private property, the Contractor shall employ such means as may be necessary to maintain pedestrian and vehicular traffic and access. The Contractor shall construct and maintain suitable plank crossings and bridges to carry essential traffic in or to the street, driveway or property in question as specified or as directed. These crossings shall be maintained for as long as it is not expedient to backfill the excavation or until such time as sufficient, supportive backfill may be placed. No additional payment will be made for this work.

69.02 Movement of construction equipment and all other vehicles and loads over and adjacent to any slotted drain pipe shall be done at the Contractor's risk. Any pipe or backfill which becomes damaged or disturbed through any cause shall be replaced or repaired as directed by the City at the expense of the Contractor and at no cost to the State. Suitable temporary crossovers consisting of steel plate or other materials approved by the City shall be employed for a minimum of 7 consecutive calendar days following concrete backfill operations in all areas where vehicular traffic must be maintained or until such time as the pipe installation will withstand loading without damage. All concrete surfaces shall receive a protective coating. End cap installation shall be as recommended by the manufacturer.

ARTICLE 70. DIRECTIONAL SIGNS AND LIGHTS

70.01 Suitable signs, lights and such required items to direct traffic shall be furnished and maintained by the Contractor. No additional payment shall be made for this work.

ARTICLE 71. MAINTENANCE OF WORKPLACE

71.01 The Contractor must keep streets and premises free from unnecessary obstructions, debris and all other materials. The City or Project Engineer may, at any time, order all equipment, materials and surplus from excavations to be removed from the work area. Debris and all other materials lying outside of the working area shall be promptly removed. Should the Contractor fail to remove such material within 24 hours of notice to remove, the City or Project Engineer may cause any or all of said materials to be removed by others. The cost of this removal shall be deducted from any monies, which may be, or may become, due the Contractor under the Contract. In special cases, the City or Project Engineer may cause such materials to be removed without prior notice.

ARTICLE 72. OPERATIONS AT SEVERAL POINTS

72.01 The Contractor may carry on the work simultaneously at more than on point only if, in the opinion of the City or Project Engineer, such action is acceptable and is necessary to insure completion of the work within the specified time.

72.02 The Contractor's Construction Progress Schedule shall be adjusted to provide for work being simultaneously conducted at more than one point (location) at the site or sites.

ARTICLE 73. INTERFERENCE WITH EXISTING STRUCTURES

73.01 Whenever it may be necessary to cross or to interfere with existing culverts, drains, sewers, water pipes or fixtures, guard rails, fences, gas pipes or fixtures or other structures needing special care, due notice shall be given to the City or Project Engineer. Work involving these items shall be done according to the City's or Project Engineer's directions. Whenever required, all objects shall be strengthened to meet any additional stress that the work herein specified may impose upon it. Any damages that may occur shall be thoroughly repaired. If so directed by the City or Project Engineer, the location of any existing work shall be changed to meet the requirements of the proposed work, if necessary, to leave all in good working order. The entire work shall be the responsibility of the Contractor and the work shall be done at no additional expense to the City.

73.02 The Contractor shall be responsible for repairing all broken or damaged mains or utilities, property markers, monitoring wells, and other existing structures to remain, or outside the Limit of Work, during the progress of the Work. The Contractor shall repair and shall be responsible for all damages to existing utilities and structures with no additional expense to the City. The Contractor shall contact the proper utility or authority to correct or make any changes due to utility or other obstructions during the prosecution of the work, but the entire responsibility and expense shall be with the Contractor.

73.03 All damaged items of work or items required to be removed and replaced due to construction shall be replaced or repaired by the Contractor to the complete satisfaction of the City and/or utility at no additional expense to the City.

ARTICLE 74. TURF, TOPSOIL AND OTHER REPLACEMENT ITEMS

74.01 Where the construction runs through cultivated or sodded lands, the Contractor shall stockpile the turf and topsoil separately and replace the same after the excavation is filled. The Contractor shall leave the land as nearly as possible in its original condition. Trees, fences, walls, walks and other items must not be damaged.

ARTICLE 75. MATERIALS

75.01 All materials furnished and used in the completed work shall be new, of best quality, workmanship, and design and shall be recognized as standard in good construction practices. Whenever a specification number or reference is given, the subsequent amendments (if any) shall be included. The standards set forth in the selection of

materials and supplies are intended to conform to those standards adopted by the City. Preference in manufacture shall be given to familiarize the Contractor with the requirements of the Project Engineer when the occasion or choice of materials or supplies so demands.

ARTICLE 76. DEFECTIVE MATERIALS

76.01 No materials shall be laid, installed or used which are known to be, or which may be found to be, in any way defective. Notice shall be given to the Project Engineer of any defective or imperfect material. Defective or unfit material found to have been laid, installed or used shall be removed and replaced by the Contractor with unobjectionable material. This removal and replacement shall be made without additional expense to the City.

ARTICLE 77. INSPECTION AND TESTING OF FURNISHED MATERIALS

77.01 Unless herein provided otherwise, all materials furnished by the Contractor are subject to thorough inspections and tests by the Project Engineer. Any materials condemned or rejected by the Project Engineer as not conforming to the specifications may be branded or otherwise marked. Branded or marked material shall be, on demand, at once removed by the Contractor to a satisfactory distance from the site. Removed materials shall not again be brought upon or near to the work.

ARTICLE 78. SAMPLES AND ORDERING LISTS

78.01 Unless herein provided otherwise, the Contractor shall submit samples of the various materials used on the contract as required by the specifications for testing purposes. All ordering lists shall be submitted by the Contractor to the Project Engineer for approval and must be approved before the ordering of the materials.

ARTICLE 79. SANITARY CONVENIENCES

79.01 Adequate sanitary conveniences, properly secluded from public observation, for the use of workmen on the premises shall be provided and maintained by the Contractor in accordance with the requirements of local and State health authorities. These conveniences shall be maintained in such manner and at such points as shall be approved and their use shall be strictly enforced. Sanitary waste shall be treated and disposed of in a manner satisfactory to, and as directed by, the City and/or the local and State health authorities. Under no circumstances shall sanitary waste be allowed to flow on the surface of the ground or in the work area.

79.02 The cost of sanitary conveniences and the maintenance of same will not be paid for separately, but compensation will be considered to be included in the prices stipulated for the items of work as listed in the bid/proposal form.

ARTICLE 80. FINISHING AND CLEANING UP

80.01 In completing any backfilling operation, the Contractor shall replace all surface material to the satisfaction of the City. The Contractor shall then immediately remove all surplus material, all tools, and other property belonging to him. The Contractor shall leave the entire street or surrounding area free and clean, in good order and at no additional expense to the City. Backfilling and removal of surplus materials shall follow closely upon the completion of the work. The Contractor shall exercise special care in keeping rights-of-way and private and public lands, upon which work is being performed, clean and free of debris at all times. The Contractor will remove tools and other property belonging to him when they are not being used.

80.02 In case the Contractor shall fail or neglect to promptly remove all surplus materials, tools and other incidentals after backfilling, or shall neglect to do required paving promptly, the City or Project Engineer may, after 24 hours notice, cause the work to be done and the cost thereof shall be deducted form any monies then or thereafter due the Contractor.

ARTICLE 81. RIGHTS OF ACCESS

81.01 Nothing herein contained or shown on the drawings shall be construed as giving the Contractor exclusive occupancy of the work area involved. The City or any other Contractor employed by the City, the various utility companies, contractors or sub-contractors employed by Federal, state or local government agencies involved in

the general project or upon public rights-of-way, may enter upon or cross the area of work or occupy portions of it as directed or permitted. When the territory of one contract is the convenient means of access to the other, each contractor shall arrange his work in such manner as to permit such access and to prevent unnecessary delay in the work as a whole. Said access rights shall also include all Federal and state agencies and their representatives that have an interest in said project.

ARTICLE 82. WORK BY OTHERS

82.01 The City reserves the right to do any other work which may connect with, or become a part of, or be adjacent to the work embraced by this Contract, at any time, by contract work or otherwise. The Contractor shall not interfere with, nor obstruct in any way, the work of such other persons as the City may employ. The Contractor shall execute his own work in such a manner as to aid in the execution of work by others as may be required. No excavations or backfilling will be permitted if other work by the City will be affected.

ARTICLE 83. WORK WITHIN THE LIMITS OF PRIVATE PROPERTY

83.01 Particular attention is hereby directed to the fact that some of the work included under this Contract may have to be done within the limits of properties that are publicly or privately owned. The City, where necessary has, or will have, secured the necessary easements to these properties for construction purposes. The Contractor will be permitted to utilize the areas of the City's easements, subject to all of the conditions and requirements as they may affect the Contractor's operations. The Contractor shall conduct his operations and activities in the performance of the work with all such conditions and requirements as may be imposed by the City or Project Engineer.

83.02 All means and rights of ingress and egress to the work areas and all other areas required for work space, in addition to the City's easements, shall be the entire responsibility of the Contractor, All costs in connection therewith shall be considered to be included in the prices stipulated for the appropriate items of work as listed in the bid/proposal form.

83.03 The Contractor shall neither use nor occupy public or private lands outside the limits of the City's easements and rights-of-way unless written permission from the owner of the public or private lands have first been obtained. Copies of the written agreements shall be submitted to the Project Engineer prior to entering upon such lands. The Contractor shall be responsible for cooperating with, and for coordinating the prosecution of, the work of this Contract with the public and private property owner. Any abuse to the lands of the public and private property owner shall be immediately corrected by the Contractor, at the Contractor's expense, to the complete satisfaction of the property owner. The Contractor shall take such precautionary measure, as required by the City, to prevent further nuisances, interference or inconvenience to abutting property owners.

83.04 It shall be the Contractor's full responsibility to be familiar with the limitations imposed upon the work of construction within the various properties of public or private ownership and rights-of-way by existing occupancy or use. The Contractor will be required to make every effort to fully and satisfactorily protect trees, shrubs, lawns, gardens, fences, walks, driveways, structures and all and any other appurtenances of the property owners.

83.05 The Contractor shall provide adequate access to all walks, driveways, yards or structures: shall protect all work by the erection or placement of safety guards or barriers, lights and such other incidentals; and where required, shall construct temporary plank crossings or timbers to permit full use of private facilities at all times. All of these actions are to be performed at no additional expense to the City. All other applicable provisions for control of work within the areas of public travel set forth elsewhere herein shall also apply to work within the limits of private ownership.

83.06 The Contractor shall cooperate with the public and private property owners and shall also contact the City and Project Engineer for additional information regarding the requested (or required) length of time needed as a notice to be given to the public or private property owner before the Contractor enters their property to start the construction. In some cases, a certain time to start the work and a certain limited length of time may be required to complete the work on public and private property owners. Furthermore, the contactor may be required to shutdown construction operations as necessary to prevent undo interference with the operation of private and public business within the project area.

83.07 Before proceeding with construction operations, the Contractor shall provide suitable and substantial gates or other approved forms of closing gap devices in every fence within the limits of the owner's easements through which the Contractor intends to move or pass equipment and materials. It is the responsibility of the Contractor to negotiate with the owner of each fence all of that owner's requirements, in addition to those specified above. It shall also be the responsibility of the Contractor to comply with all requirements as specified herein and as agreed to with the owner's in a manner satisfactory to the owner.

83.08 No separate payment will be made for the requirements specified under "WORK WITHIN THE LIMITS OF PRIVATE PROPERTY" and all cost in conjunction therewith shall be included in the prices stipulated for the appropriate items of work as listed in the bid/proposal form.

ARTICLE 84. LOADING

84.01 No part of the structures involved in this Contract shall be loaded during construction with a load greater than that calculated for the safety of the structure. Should any accidents or damage occur through any violation of this requirement, the Contractor will be held responsible. If necessary, the Contractor shall request, in writing, the allowable loading from the Project Engineer.

ARTICLE 85. COMPLETION OF WORK

85.01 In addition to the specified or described portions, all other work and all materials, equipment and labor of whatever description which are necessary or required to complete the work, or for carrying out the full intent of the drawings and specifications, as interpreted by the Project Engineer, shall be provided by the Contractor. Payment therefore shall be considered as having been included in the prices stipulated for the appropriate items of work as listed in the bid/proposal form.

ARTICLE 86. DUST AND SPILLAGE CONTROL

86.01 The Contractor shall exercise every precaution to prevent and to control dust arising out of all construction operations from becoming a nuisance. Water shall be provided and applied as required or as ordered by the Project Engineer for allaying dust conditions. Pavements adjoining excavations shall be kept swept and/or washed clean of excess excavated material wherever and whenever directed. Earth piles adjacent to excavations, earth stockpiles and surfaces of refilled excavations shall be kept moist at all times as directed. No extra payment will be made for providing the dust control measures and for conforming to the requirements specified above. Compensation therefor shall be considered included in the prices stipulated for the appropriate items of work as listed in the bid/proposal form.

86.02 The Contractor shall take appropriate measures to control the generation of dust from its activities. Water shall be provided and applied as required or as ordered by the Project Engineer for allaying dust conditions.

86.03 All vehicles utilized by the Contractor for delivery or removal of materials shall have appropriate covers to prevent spillage of material during transit.

ARTICLE 87. CARE OF THE WORK

87.01 The Contractor shall be responsible for all damages to persons or property that occur as a result of the Contractor's fault or negligence concerning the prosecution of the work. The Contractor shall also be responsible for the proper care and protection of all material delivered and of all work performed until the issuance of a Notice of Project Acceptance by the City, whether or not the same has been covered by partial payments authorized by the Project Engineer.

ARTICLE 88. EMERGENCY WORK

88.01 The Contractor shall file, with the City Engineer and the Project Engineer, if any, the name and telephone number of a person authorized by him who may be contacted regarding emergency work at the job site that may be required during non-working hours for reasons of public safety. This person shall be readily available and shall have full Authority to deal with any emergency that may occur.

ARTICLE 89. FIRE PREVENTION AND PROTECTION

89.01. All Federal laws (Occupational Safety and Health Act) and all state and municipal rules and regulations with respect to fire prevention, fire-resistant construction and fire protection shall be strictly adhered to by the Contractor. All work and facilities necessary therefore shall be provided and maintained by the Contractor in an approved manner.

89.02. All fire protection equipment (as per 89.01 above) shall be provided by the Contractor for the protection of the contract work including temporary work and adjacent property. Personnel experienced in the operation of the fire protection equipment and apparatus shall be available whenever work is in progress and at such other times as may be necessary for the safety of the public and of the work.

89.03. Open fires will not be permitted.

ARTICLE 90. PLANIMETER

90.01 For estimating quantities, where the computations of areas by analytic and geometric methods would be comparatively laborious, it is stipulated and agreed that the planimeter shall be considered an instrument of precision adapted to the measurement of such areas, as utilized by an engineer.

ARTICLE 91. SUPERINTENDENCE

91.01 During the entire duration of the project, the Contractor shall employ a competent superintendent in personal charge of the work. The superintendent shall be present during all phases of construction and shall have full authority to act for the Contractor. The superintendent shall be continued in this capacity full time for this project unless (1) the person ceases to be on the Contractor's payroll or (2) the person proves to be unacceptable to the City or Project Engineer. Instructions given to the superintendent and/or supervisory subordinates shall be considered as given to the Contractor. A chain-of-command listing shall be submitted by the Contractor to the City and Project Engineer and shall be adhered to in the temporary absence of the superintendent.

ARTICLE 92. CONTRACT ADMINISTRATION COSTS - OUTSIDE REGULAR HOURS

92.01 The working schedule shall be confined to a five (5) day week ending on Friday. The working day shall be any eight-hour period beginning no earlier than 7:00 AM and ending no later than 7:00 PM. Whenever the Contractor elects to perform work on Saturdays, Sundays or legal holidays observed by the City or to work in excess of the normal working hours stated above, the Contractor shall pay to the City the extra cost incurred by the City due to the increased cost of contract administration. Payment shall include all cost of inspection and administration for such Saturday, Sunday or legal holiday work or for work in excess of the normal working day, which the City is obligated to incur and for the extra expense involved in overtime work resulting from the performance of work on these days.

92.02 No work outside regular hours or overtime work shall be planned or executed without the approval of the City.

ARTICLE 93. DAILY REPORTS

93.01 The Contractor shall submit daily activity reports on an approved form for the duration of the project. The report shall indicate all personnel currently employed on the work, including each trade and every subcontractor; all equipment and whether that equipment was idle for the particular day; a general description of all work accomplished and any authorized extra work (time and material reports shall be submitted on separate forms).

ARTICLE 94. MATERIAL AND WORKMANSHIP

94.01 All materials and workmanship incorporated in the work covered by this Contract are to be of the highest grade of their respective kinds for the purpose intended. The Contractor shall furnish to the Project Engineer for approval the name of the manufacturer of machinery and mechanical or other equipment that the Contractor contemplates incorporating in the project together with their respective performance capacities and other pertinent information.

94.02 When required by the Specifications, or when called for by the City or Project Engineer, the Contractor shall furnish the required information for approval of all material that the Contractor contemplates incorporating in the work. Samples of material shall be submitted for approval to the Project Engineer when and as directed. Machinery, equipment and material installed or used without approval shall be at the risk of subsequent rejection.

ARTICLE 95. TEMPORARY WATER SUPPLY

95.01 In the event temporary water supply work is required, it shall be provided in accordance with the requirements of the Waterbury Water Bureau and all local and state health authorities. The Contractor shall provide and maintain facilities for an adequate supply of water suitable for use for construction purposes and for domestic use as required for the work of this Contract. The cost of all work, materials, equipment, appurtenances and accessories necessary for providing supplies of water at the site, including the cost of all water consumed, shall be borne by the Contractor.

95.02 Upon Substantial Completion to the work of this Contract, and before Final Completion of the Project, the Contractor shall remove all temporary piping and appurtenant work used for the temporary water supply.

ARTICLE 96. FITTING AND COORDINATION OF WORK

96.01 The Contractor shall be responsible for the proper fitting of all work and for the coordination of operations of all trades, subcontractors or material suppliers engaged in the work. The Contractor shall be prepared to guarantee to each of his subcontractors the dimensions for which they may require for the fitting of their work to all surrounding work. The Contractor shall do, or shall cause his agents to do, all cutting, fitting, adjusting and patching necessary to make the several parts of the work come together satisfactorily and properly and to fit the work to receive, or to be received by, the work of other contractors.

ARTICLE 97. ARCHEOLOGICAL FINDS

97.01 During the life of this Contract, in the event that any articles such as "charcoal", "bone", "shell", "cultural objects", "fire-cracked stones", "stone flaking material." or any other such related items of historical significance are discovered on the project, the Contractor is required to notify:

(1)The City
(2) Project Engineer or Inspector

ARTICLE 98. EXCAVATIONS NEAR UNDERGROUND UTILITIES

98.01 In conformance with Section 16-345 of the Regulations of the Department of Public Utility Control, the Contractor shall not start any excavation and/or blasting of rock activity without first having ascertained the location of all such utilities in the area. The Contractor shall notify the Public Utilities Regulatory Authority (PURA) "CALL BEFORE YOU DIG" (Toll Free 1- 800-922-4455) at least two (2) full days in advance (excluding Saturday, Sunday and legal holidays), but no more than thirty (30) days before starting any such work. Such notice shall include the name, address and telephone number of the persons/agency performing the work, the date, location and type of excavation.

98.02 The PURA should immediately transmit such information to the utility companies whose facilities may be affected. Utility companies receiving notice should mark-up the locations of their facilities on the work site. If they have no facilities in the area, they shall so inform the Contractor. If the Contractor does not receive any information or marked-up locations on the work sites, the Contractor shall contact PURA again to verify that the utility companies have responded to the initial call. Under no circumstances will the Contractor be allowed to start any excavation and/or blasting work prior to obtaining all necessary information regarding the location of underground utilities at the site. It is the Contractor's responsibility to have all utilities marked on the work sites prior to starting the work.

ARTICLE 99. WATER QUALITY OF WELLS

99.01 The Contractor shall perform all tests required by the State Health Department on all water supply wells and reservoirs where directed by the City or Project Engineer before and after construction. All labor, materials and testing shall be paid by the Contractor at no cost to the City.

ARTICLE 100. WORK IN STATE HIGHWAYS

100.01 If any of the work under this Contract is in a state highway the Contractor shall obtain all required permits at his own expense. The Contractor shall perform the work in accordance with the terms and conditions stipulated by the Connecticut Department of Transportation (ConnDOT) and/or as required by ConnDOT inspectors. The Contractor must provide such bonds, security and insurance as may be required to obtain such permits.

100.02 In the event the City, or the City and the Contractor jointly, are required to obtain any permits, including detour permits, the Contractor shall be familiar with the conditions of the permits and shall be held responsible for compliance with all the requirements of the permits and all specifications attached thereto, as if the permits were held solely by the Contractor.

100.03 Whenever State inspectors, flagmen or other costs are incurred as a condition to obtaining permits, the Contractor shall be responsible for payment of these costs with no reimbursement from the City.

100.04 The Contractor shall conform to all ConnDOT requirements for materials and construction methods for all work within state highways. Sheeting or an adequate trench box may be required in all trenching operations to confine trench widths and to protect State facilities. Additional pavement replacement may be required to properly restore the roadway surface.

100.05 The cost of all labor, materials and equipment necessary to conform to CONNDOT requirements for work in, or adjacent to, state highways, including work not specifically stated in the Contract Plans and Specifications, shall be the sole responsibility of the Contractor and shall not be reimbursed by the City. Therefore, the Contractor is informed to evaluate all CONNDOT requirements for the project prior to submitting the Bid/Proposal for the project and to include these costs in his bid/proposal prices.

ARTICLE 101. EXISTING INSPECTION REPORTS

101.01 Any existing inspection reports concerning the project which have been prepared by or for the City or Project Engineer will be made available for the Contractor's information.

ARTICLE 102. TEST REPORTS; CERTIFICATES OF COMPLIANCE AND SHIPPING LISTS

102.01 Except where expressly provided otherwise in the Contract Documents, the Contractor shall furnish to the Project Engineer the material manufacturer's notarized test reports and methods of testing by an approved independent laboratory in order to show compliance of all materials furnished with all specification requirements, the reports shall also contain manufacturer's notarized certificates of conformance stating that all materials furnished under these Specifications conform with all specification requirements; that each shipment of materials shall be accompanied by the manufacturer's notarized certificate of conformance and that a shipping list itemizing the amounts of each shipment shall accompany each shipment.

ARTICLE 103. CLEANING FINISHED WORK

103.01 After the work is completed, the sewers, manholes and structures shall be carefully cleaned free of dirt, broken masonry, mortar, construction and other debris and shall be left in first class condition, ready for use. All temporary or excess material shall be disposed of and the work left broom-clean to the satisfaction of the Project Engineer.

ARTICLE 104. COMPLIANCE TO ACTS AND EXECUTIVE ORDERS

104.01 If this Contract is federally assisted and the Contractor must comply with all applicable statutes, acts, executive orders and regulations, including without limitation:

(a) **TITLE VI, CIVIL RIGHTS ACT OF 1964** Provides that no person in the United States shall on the grounds of race, color or national origin be excluded from participation in, be denied the benefits of, or be subjected to discrimination under any program or activity, receiving Federal financial assistance.

(b) **SECTION 3, HUD ACT OF 1968** Provides that, to the greatest extent feasible, opportunities for training and employment shall be given to lower income residents of HUD-assisted project areas, and that contracts for work in connection with such projects be awarded to business concerns which are located in, or are owned in substantial part by persons residing in the area of the project.

(c) **LABOR STANDARDS** Compliance with Davis Bacon Act, as amended (40 U.S.C. 267a-5) Contract Work Hours and Safety Standards Act (40 U.S.C. 327-333) 13.0.

ARTICLE 105 SEMI-FINAL INSPECTION / SUBSTANTIAL COMPLETION

105.1 Contractor shall notify the Project Engineer when it believes the work (or a portion thereof) is Substantially Complete and shall file with the City a written, notarized "Contractor's Affidavit of Substantial Completion" and request a Semi-Final Inspection of the work.

105.2 Contractor, prior to requesting Semi-Final Inspection, shall complete and submit the following, listing known exceptions in its Affidavit of Substantial Completion:

i. Include supporting documentation for Substantial Completion as indicated in these Contract Documents.
ii. Include Drafts of all documentation for Final Completion as indicated in these Contract Documents.
iii. Advise City of outstanding permit closure requirements. Submit certificates of inspections conducted, reports, and other documentation required by local or state authorities.
iv. Where required, submit photographs, specific warranties, final certifications, and similar documents.
v. Provide Partial Waiver of Lien from each Subcontractor, supplier and the Contractor. All money due to Subcontractors and suppliers may be withheld from payment to the Contractor until Waivers of Lien indicate no money owed.
vi. Drafts of all required As-Builts, Record Drawings and Documents and Surveys, in number and formats specified.

105.3 Subsequent to City's receipt of Contractor's Affidavit of Substantial Completion, Project Engineer will either proceed with Semi-Final Inspection or advise Contractor of prerequisites not fulfilled.

105.4 Following Semi-Final Inspection, Project Engineer will either inform the City to prepare a Certificate of Substantial Completion, or advise Contractor of work that must be performed prior to issuance of said certificate, and repeat the inspection when requested and assured that the work has been substantially completed in accordance with the Contract Documents.

105.5 Contractor shall submit its **Semi-Final Payment Application** coincident with, or first following the date claimed as Substantially Complete, which shall be processed in the same manner as a partial payment requisition and shall show either 100% completion for the work claimed as Substantially Complete, and/or list incomplete items, value of incompletion, and reasons for being incomplete.

ARTICLE 106. CITY'S CERTIFICATE OF SUBSTANTIAL COMPLETION

106.1 For the portion of the work determined to be Substantially Complete, the City shall issue "City's Certificate of Substantial Completion" which shall establish the date of Substantial Completion by the Contractor.

106.2 Concurrently, the Project Engineer shall prepare a list (the "punchlist") of remaining items of work to be completed and/or deficiencies to be addressed.

106.3 The City reserves the right to modify, amend and/or update the "punchlist," as it deems necessary.

ARTICLE 107. LIMITED ACCEPTANCE OF WORK

107.01 Limited Acceptance of Portion(s) of the Work shall be at City's sole discretion and shall be subsequent to issuance of City's Certificate of Substantial Completion for such work and shall relieve Contractor of responsibility for the physical aspects of said portion of the work; however such termination of responsibility for the physical aspects of the work in no way affects or diminishes any other contractual requirements governing the work so accepted, or the issuance of a Notice of Project Acceptance of the Project as whole.

107.02 Documentation of any Limited Acceptance of Portion(s) of the Work shall be evidenced by City's issuance of a Certificate of Limited Acceptance of Work for such Work.

ARTICLE 108. FINAL INSPECTION

108.01 Contractor shall notify the Project Engineer when it believes the Project is Finally Complete and shall file with the City a written, notarized "Contractor's Affidavit of Final Completion" and request a Final Inspection of the work by the Project Engineer.

108.02 Subsequent to receipt of Contractor's Affidavit of Final Completion, Project Engineer will either proceed with Final Inspection and/or advise Contractor of prerequisites not fulfilled.

108.03 At the time of submission of its Affidavit of Final Completion, Contractor, as required by the Contract Documents and/or required for completion of the Project as determined by the City, shall also provide and/or submit the following:

i. Supporting documentation required by the Contract Documents not previously submitted and accepted.
ii. Discontinue and remove, as appropriate, temporary facilities and services, along with construction tools and facilities, and similar elements.
iii. A copy of City's final punch list of itemized work to be completed or corrected, stating that each item has been completed or otherwise resolved for acceptance, endorsed and dated by the Project Engineer.
iv. Final and complete versions of all required As-Builts, Record Drawings and Documents and Surveys, in number and formats specified.
v. Provide Final Waiver of Lien from each Subcontractor, supplier and the Contractor. All money due to Subcontractors and suppliers shall be withheld from payment to the Contractor until Waivers of Lien indicate no money owed.

108.04 Following Final Inspection, Project Engineer either informs advises Contractor of work that must still be performed, etc., and the process repeats or advises the City that that the Project is Finally Complete.

ARTICLE 109. FINAL CHANGE ORDER

109.01. Upon determination that Final Completion has been reached, the City shall, if necessary, prepare a **Final Change Order.** The "**Final Change Order**" shall show the total due Contractor under the Contract, including a final estimate of all quantities. Should there be a decrease in quantities, then such variations will be computed at the unit prices in the bid/proposal form and reflected in the **Final Change Order** by adding or deducting said amounts from the from the gross sum, as applicable.

109.02 The **Final Change Order** shall reflect the final Contract Amount, all prior City payments to the Contractor, all adjustments to the Contract Amount, all retainage held by the City, any liquidated damage amounts, all unused amounts of any Owner Controlled Allowances and of all Cash Allowances, all adjustments for Alternates accepted/declined by the City and final amount of any holdback(s) by the City.

109.03 All certificates of payments and estimates, upon which partial payments may have been made being merely estimates, shall be subject to correction by this **Final Change Order**.

109.04 Contractor shall execute the Final Change Order upon issuance by the City.

109.05 All Contractor's subsequent payment requisitions shall reflect the amounts and qualities set forth in the Final Change Order.

ARTICLE 110. FINAL PAYMENT APPLICATION

110.01 Based upon the amounts and qualities set forth in the Contract Documents, as may be revised by the Final Change Order, the Contractor shall submit its Final Payment Application requesting Final Payment due under the Contract, including all retainage held by the City.

110.02 All prior estimates and City payments, including those relating to extra or additional work, retainage(s), and holdback(s), shall be subject to correction by this Final Payment.

110.02 This Final Payment Application shall be certified as to its correctness by the Project Engineer and will be processed in the same manner as the partial payment requests.

ARTICLE 111. FINAL COMPLETION / CITY'S CERTIFICATE OF FINAL COMPLETION / NOTICE OF PROJECT ACCEPTANCE

111.01 Final Completion and Project Acceptance shall occur when:

i. All Project work and services have been completed and all required documentation/paperwork has been submitted in accordance with the Contract Documents.

ii. Contractor's **Final Payment Application** has been submitted, certified as to correctness by the Project Engineer, and submitted for processing of Final Payment.

iii. Upon written determination by Project Engineer that items (i) and (ii) above are complete, the City shall issue its **Certificate of Final Completion and Notice of Project Acceptance** to Contractor, establishing therein the date of Final Completion.

ARTICLE 112. ACCEPTANCE OF FINAL PAYMENT

112.01 The acceptance by the Contractor, or by anyone claiming by or through the Contractor, of Final Payment shall constitute and operate as a release for the City from any and all claims of any liability to the Contractor for anything, theretofore done or furnished for or relating to or arising out of the work done thereunder, and for any prior act of neglect, default on the part of the City or any of its officers, agents, or employees unless the Contactor serves a detailed and verified statement of claim upon the City not later than forty (40) consecutive calendar days after mailing of such Final Payment. Such statement shall specify the items claimed. Should the Contractor refuse to accept the Final Payment as tendered, it shall constitute a waiver of any right of interest thereon.

ARTICLE 113. 10-HOUR OSHA CONSTRUCTION SAFETY AND HEALTH COURSE

113.01 The Contractor, or any subcontractors working on the project, shall provide written proof that any and all employees working on the project jobsite have successfully completed the 10-Hour OSHA Construction Safety and Health Course.

END OF SECTION

Attachment B-1

NON-DISCRIMINATION CONTRACT LANGUAGE

Pursuant to Connecticut General Statutes Section 4a-60 and except as provided in section 10a-151i of the General Statutes, every contract to which a state agency or political subdivision of the state, including a municipality or quasi-public agency, is a party to shall contain the following provisions:

(1) The contractor agrees and warrants that in the performance of the contract such contractor will not discriminate or permit discrimination against any person or group of persons on the grounds of race, color, religious creed, age, marital status, national origin, ancestry, sex, sexual orientation, gender identity or expression, status as a veteran, status as a victim of domestic violence, status as a victim of sexual assault or status as a victim of trafficking in persons, intellectual disability, mental disability or physical disability, including, but not limited to, blindness, unless it is shown by such contractor that such disability prevents performance of the work involved, in any manner prohibited by the laws of the United States or of the state of Connecticut; and the contractor further agrees to take affirmative action to ensure that applicants with job-related qualifications are employed and that employees are treated when employed without regard to their race, color, religious creed, age, marital status, national origin, ancestry, sex, gender identity or expression, sexual orientation, status as a veteran, status as a victim of domestic violence, status as a victim of sexual assault or status as a victim of trafficking in persons, intellectual disability, mental disability or physical disability, including, but not limited to, blindness, unless it is shown by such contractor that such disability prevents performance of the work involved;

(2) The contractor agrees, in all solicitations or advertisements for employees placed by or on behalf of the contractor, to state that it is an "affirmative action-equal opportunity employer" in accordance with regulations adopted by the Commission on Human Rights and Opportunities;

(3) The contractor agrees to provide each labor union or representative of workers with which such contractor has a collective bargaining agreement or other contract or understanding and each vendor with which such contractor has a contract or understanding, a notice to be provided by the Commission on Human Rights and Opportunities advising the labor union or workers' representative of the contractor's commitments under this section, and to post copies of the notice in conspicuous places available to employees and applicants for employment;

(4) The contractor agrees to comply with each provision of this section and sections 46a-68e and 46a-68f and with each regulation or relevant order issued by said commission pursuant to sections 46a-56, 46a-68e, 46a-68f and 46a-86; and

(5) The contractor agrees to provide the Commission on Human Rights and Opportunities with such information requested by the commission, and permit access to pertinent books, records and accounts, concerning the employment practices and procedures of the contractor as relate to the provisions of this section and section 46a-56.

City of Waterbury
Department of Public Works

Memorandum

To: Board of Aldermen

From: Mark Lombardo, Deputy Director of Public Works ML

Date: October 6, 2026

Re: **Board of Aldermen Approval Request / DPW Executive Summary** – On Call Tree Service Agreement between the City of Waterbury and J&J Brothers, LLC; RFP 8890

The Department of Public Works, requests your approval of the above-referenced agreement between the City of Waterbury and J&J Brothers.

There were four proposals that responded to RFP 8890 that were received by DPW. The four proposals were from Cipully Tree Service, LLC, Paulo Landscaping & Tree Removal, LLC, Hillview Property Maintenance and J&J Brothers, LLC. A selection committee was formed to review each of the respondent's experience, expertise and value-added services. Committee members were Mark Lombardo, Deputy Director, John Kollar, Supervisor of Parks and Chris Mauro, Golf Course Superintendent.

The selection committee met to complete the evaluation process and make a selection. The Selection Committee voted unanimously to award an On Call Tree Services Agreement to J&J Brothers.

Under this agreement, J&J Brothers will provide and perform maintenance as needed by the City of Waterbury. This is a one-year agreement and as an On-Call Agreement, there is no cost to the City associated with entering into the agreement. Costs will be as identified in any issued Task Orders and Purchase Orders in accordance with the On-Call Agreement.

All services requested under this agreement will be authorized through Task Orders and Purchase Orders following the rates and fees set forth in Contractor's Price Proposal, which has been incorporated into the agreement as part of Attachment A (see attached agreement). Each Task Order will set out, on a project by process basis, the desired scope of work, monetary terms and time of performance for such work, plus all other pertinent project specific information.

Included herewith is the *Disclosure and Certification of Obligations Affidavit Regarding Outstanding Obligations to the City of Waterbury* submitted by J&J Brothers in connection with this project and a copy of the Tax Clearance issued by the Office of Tax Collections.

Accordingly, attached are five (5) copies of the proposed contract for your review and consideration, plus one (1) copy to serve as 'record copy' for the City Clerk's Office.

Thank you.

cc. Attorney Lynn McHale, Staff Attorney, Office of the Corporation Counsel

MAINTENANCE SERVICES AGREEMENT
RFP No. 8890
for
ON-CALL TREE SERVICES
between
The City of Waterbury, Connecticut
and
J & J BROTHERS, LLC

THIS AGREEMENT, effective on the date signed by the Mayor, is by and between the CITY OF WATERBURY, City Hall, 235 Grand Street, Waterbury, Connecticut 06702 (the "City") and J & J BROTHERS, LLC, located at 200 Pratt St, Meriden, CT, 06450-4268, a State of Connecticut duly registered domestic limited liability company **(the "Contractor").**

WHEREAS, the Contractor submitted a proposal to the City responding to **Request for Proposal ("RFP") Number 8890 for ON-CALL TREE SERVICES**; and

WHEREAS, the City accepted the Contractor's proposal for **RFP No. 8890**; and

WHEREAS, the City desires to obtain the Contractor's services pursuant to the terms, conditions and provisions set forth in this agreement (the "Project").

NOW THEREFORE, THE PARTIES AGREE AND COVENANT AS FOLLOWS:

1. Scope of Services. The Contractor shall furnish all of the labor, services, equipment, materials, supplies, transportation, and incidentals necessary to complete the Project as specified in this agreement (also referred to herein as "Contract") and such shall be completed in a satisfactory manner, as reasonably determined by the City. All labor, services, equipment, materials, supplies, transportation, and incidentals shall comply with **(i)** any and all applicable local, state and federal laws, statutes, ordinances, rules and regulations, including without limitation all notice requirements thereunder, and **(ii)** generally accepted professional standards.

1.1. The Project consists of **ON-CALL TREE SERVICES** as detailed and further described in the proposal documents in **Attachment A** and are hereby made material provisions of this Contract. **Attachment A** shall consist of the following, which are attached hereto, are acknowledged by the Contractor as having been received, or otherwise hereby incorporated by reference as noted below, and all are made a part hereof:

1.1.1 RFP Number 8890 (acknowledged by the Contractor as having been received and incorporated by reference);

1.1.2 Addendum #1 to RFP Number 8890, dated August 25, 2026 and

consisting of 8 pages (attached hereto);

1.1.3 Contractor's Proposal, consisting of 21 pages, submitted in response to **RFP Number 8890**, and Contractor's Price Proposal, dated September 1, 2026 and consisting of 3 pages (all attached hereto);

1.1.4 Certificates of Insurance (attached hereto);

1.1.5 Performance Bond and Payment Bond (incorporated by reference);

1.1.6 Special Conditions (Article 1 – Article 22) consisting of 6 pages (attached hereto);

1.1.7 General Conditions (Article 1 – Article 113) consisting of 35 pages (attached hereto);

1.1.8 Technical Specifications, RFP Attachment F, consisting of 5 pages (attached hereto);

1.1.9 Annual Statement of Financial Interests; Disclosure and Affidavit Re: Outstanding Obligations to the City; Debarment Certification; Corporate Resolution, Non-Collusion Affidavit (incorporated by reference);

1.1.10 Any and all amendment(s) and Change Orders issued by the City after execution of Contract (incorporated by reference);

1.1.11 All applicable Federal, State and local statutes, regulations, charter and ordinances (incorporated by reference); and

1.1.12 All permits (including, but not limited to, City of Waterbury Building permit(s)) and licenses (incorporated by reference).

1.2. The entirety of **Attachment A, Attachment B-1,** plus this executed instrument are together deemed the Contract Documents (hereinafter collectively referred to as "Contract Documents"). The City's record copy of the Contract Documents shall control and shall be effective and binding on the Contractor. In the event that any provision in the Contract Documents conflict with any other provision therein, the provision in the component part of the Contract Document first enumerated below shall govern over any other component part which follows it numerically.

1.2.1 Federal, State, and local laws, regulations, charter and ordinances
1.2.2 Contract Amendment(s) and Change Orders
1.2.3 Contract

1.2.4 Contractor's response to **RFP Number 8890** and Contractor's Price Proposal
1.2.5 Special Conditions
1.2.6 General Conditions
1.2.7 Technical Specifications

1.3. Task Order Development. The parties hereto agree that the City, through its Using Agency (i.e., City Department), may request from the Contractor at any time during the term of this Agreement a proposal to perform services pertaining to **On-Call Tree Service** that shall be completed within the Contract Time of this Agreement and as further provided in the applicable Task Order(s) and agreed to by the Contractor. The Using Agency shall issue for the Contractor's review, comment and approval a Task Order that:

1.3.1 assigns a Task Order number;
1.3.2 provides a general description of the Task Order project;
1.3.3 provides the time by which all work under the Task Order shall be completed;
1.3.4 proposes a not to exceed cost to perform all work under the Task Order with compensation being based upon the hourly rates provided in the Contractor's response to the City's **RFP Number 8890**;

1.4 The parties hereto agree that no work shall commence under a Task Order until and unless it has been fully executed by the Contractor (through its Project Manager) and by the City (through the Department Head of the Using Agency) and a City Purchase Order for said work has been issued.

1.5 Task Order Process. The parties hereto agree that for all Task Orders approved in writing by the City's Using Agency:

1.5.1 The Using Agency shall process a requisition with the City's Finance Department for each specific Task Order;
1.5.2 The Using Agency shall not issue a Notice to Proceed with the Task Order work to the Contractor until and unless the City issues a Purchase Order for such work; and
1.5.3 The Contractor shall provide invoices to the Using Agency on a monthly basis for services rendered under each Task Order during the period in question and shall include therewith a narrative detailing the services rendered during the period in question and any further information requested by the Using Agency.

2. Representations Regarding Qualification and Accreditation. The Contractor represents that its employees are licensed to perform the scope of work set forth in this Contract. The Contractor further represents that its employees have the requisite skill, expertise and knowledge necessary to perform the scope of work required under the terms of this Contract, including any supplementary work and the City relies upon these.

2.1. Representations regarding Personnel. The Contractor represents that it has, or will secure at its own expense, all personnel required to perform the services under this Contract. Such personnel shall not be employees of or have any contractual relationship with the City, unless use of City employees or of personnel having a contractual relationship with the City is approved in writing. As set forth above, all the services required hereunder shall be performed by the Contractor or under its supervision and all personnel engaged in the work shall be fully qualified and shall be authorized or permitted under state or local law to perform such services.

2.2. Representations regarding Qualifications. The Contractor hereby represents that, to the extent required by Federal, State and Local statutes, regulations, codes, ordinances, and policies, that the Contractor and/or its employees be licensed, certified, registered, or otherwise qualified, the Contractor and all employees providing services under this Contract, are in full compliance with those statutes, regulations and ordinances. Upon City request, the Contractor shall provide to the City a copy of the Contractor's licenses, certifications, registrations, etc.

3. Responsibilities of the Contractor. All data, information, etc. given by the City to the Contractor and/or created by the Contractor shall be treated by the Contractor as proprietary to the City and confidential unless the City agrees in writing to the contrary and shall be used solely for the purposes of providing services under this agreement. The Contractor agrees to forever hold in confidence all files, records, documents and other information which may come into the Contractor's possession during the term of this agreement, except where a disclosure is expressly stated as a requirement of this agreement. Notwithstanding the foregoing, where a Contractor disclosure is required to comply with statute, regulation, or court order, the Contractor shall provide prior advance written notice to the City of the need for such disclosure. The Contractor agrees to properly implement the services required in the manner herein provided. The Contractor shall, in addition to any other responsibilities set forth in this Contract and the Schedules and Attachments hereto, perform the following coincident with the performance of this Contract:

3.1. Use of City Property. To the extent the Contractor is required to be on City property to render its services hereunder, the Contractor shall have access to such areas of City property as the City and the Contractor agree are necessary for the performance of the Contractor's services under this agreement (the "Site" or the "Premises") and at such times as the City and the Contractor may mutually agree.

3.2. Working Hours. Contractor's Working hours shall be 24 hours/7 days a week as needed by the City.

3.3. Cleaning Up. To the extent the Contractor is required to be on City property to render its services hereunder, the Contractor shall at all times keep the premises free from accumulation of waste materials or rubbish caused by Contractor, its employees or subcontractors, and at the completion of the work shall remove all rubbish from and about the project and all tools, scaffolding and surplus materials and shall leave the

Premises "broom clean" or its equivalent, unless more exactly specified. In case of dispute, the City may remove the rubbish and charge the cost to the Contractor.

3.4. Publicity. Contractor agrees not to deliberately disclose the fact that the City has entered into or terminated this Contract or disclose any of the terms of the Contract or use the City's name in connection with any publicity, unless the City gives prior written consent to such use of the City's name in each instance.

3.5. Standard of Performance. All labor, services, equipment, materials, reports, plans, specifications, drawings, deliverables, incidentals, etc., either at the Premises or intended for it, shall conform in all respects with the requirements of this agreement, and shall be the best obtainable from the crafts and trades. In all cases, the labor, services, equipment, materials, reports, plans, specifications, drawings, deliverables, incidentals, etc. shall be equal to or better than the grade specified, and the best of their kind that is obtainable for the purpose for which they are intended.

3.5.1 The standard of care and skill for all services performed by the Contractor shall be that standard of care and skill ordinarily used by other members of the Contractor's profession practicing under the same or similar conditions at the same time and in the same locality. The Contractor's services rendered hereunder shall be rendered completely and by qualified personnel in accordance with standard industry practice.

3.6. Contractor's Employees. The Contractor shall at all times enforce strict discipline and good order among its employees, and shall not employ any unfit person or anyone not skilled in the work assigned.

3.7. Due Diligence Obligation. The Contractor acknowledges its responsibilities to examine and to be thoroughly familiar with the City's RFP documents, including, but not limited to the specifications, and any addenda thereto. The Contractor hereby warrants and represents that prior to the submission of its proposal during the RFP process, it reviewed or was afforded opportunity, by the City, to review all physical items, facilities, services or functions essential to the satisfactory performance of the services required ("Due Diligence") and thereby certifies that all such items facilities, services or functions are included in this agreement and thereby warrants that:

3.7.1 it conducted or had opportunity to conduct all Due Diligence prior to the submission of its proposal and, accordingly, any additional costs, services or products resulting from the failure of the Contractor to complete Due Diligence prior to submission of its proposal shall be borne by the Contractor. Furthermore the Contractor had the opportunity during the RFP process to ask questions it saw fit and to review the responses from the City;

3.7.2 its failure or omission to make investigation and verification of data shall, in no way, be cause for future claim of ignorance of such data or conditions nor

shall such failure to investigate and verify be the basis for any claim whatsoever, monetary or otherwise;

3.7.3 it is solely responsible for resolving any issues resulting from the failure to conduct Due Diligence and shall assume any costs that may result during the implementation of the Project, including, but not limited to, adherence to specifications and pricing for the Project.

3.7.4 it was responsible for specifying any changes and disclosing any new costs prior to the submittal of its proposal. Thus, in the event any changes or costs are disclosed by the Contractor, or otherwise required, during the performance of its services, the sole responsibility for any modification, delay and cost of such changes shall reside with the Contractor.

3.7.5 has familiarized itself with the nature and extent of the Contract Documents, Work, locality, and with all local conditions and Federal, State and Local laws, ordinances, rules and regulations that in any manner may affect cost, progress or performance of the Work;

3.7.6 has given the City written notice of any conflict, error or discrepancy that the Contractor has discovered in the City's RFP documents and other documents for **RFP Number 8890** (collectively "Proposal Documents"); and

3.7.7 agrees that the Proposal Documents are sufficient in scope and detail to indicate and convey understanding of all terms and conditions for performance of the Work.

3.8. Safety. Contractor shall perform all work in full compliance with Local, State and Federal health and safety regulations. All work hereunder shall be performed in a safe manner. Contractor shall immediately correct any dangerous condition caused by or resulting from its work. If it fails to correct, or to act diligently to correct, any condition which City reasonably believes to be a hazard to persons or property, then immediately upon oral or written notice to any supervisory or similar personnel of Contractor, City may, but shall not be required to, correct same at Contractor's expense. City shall confirm in writing any oral notice given within five (5) days thereafter.

3.9. Permits and Licenses. Unless expressly stated to the contrary in Section 1 of this Contract and **Attachment A**, the Contractor shall secure and obtain all permits and all licenses required, or necessary, or prudent for the performance of the Contractor's obligations under this Contract and for the City's occupancy, use, and operation of the Project.

3.10. Manufacturer's Directions. Where it is required in this Contract that materials, products, processes, equipment or the like be installed or applied in accord with manufacturer's directions, specifications or instructions, it shall be construed to mean that the said application or installation by the Contractor shall be in strict accord with

printed instructions furnished by the manufacturer of the material concerned for use under conditions similar to those at the Project site. Except as may be otherwise required in Attachment A, one (1) copy of such instructions shall be furnished to the City.

3.11. Review by the City. The Contractor shall permit the City and the City's duly authorized representatives and agents to review, at any time, all work performed under the terms of this Contract at any stage of the Project.

3.12. Records Maintenance. The Contractor shall maintain or cause to be maintained complete records documenting compliance with its obligations under the Connecticut General Statutes, the regulations of the Commission on Human Rights and Opportunities, and this Contract, including records of good-faith-efforts, subcontractor solicitations, bids received, awards, payments, documents relative to charges, costs, expenses fees, alleged breaches of contract, settlement of claims or other matters pertaining to the Contractor's demand for payment, workforce information, certifications, correspondence and filings with the Commission on Human Rights and Opportunities, for the period required by applicable law and regulations of the Commission on Human Rights and Opportunities.

3.13. Reporting Requirement. The Contractor shall deliver periodic, written reports to the City's Using Agency setting forth **(i)** the issue date of the report, **(ii)** the time period covered by the report, **(iii)** a brief description of the work and services completed by the Contractor and/or delivered by the Contractor during the time period covered by the report, **(iv)** expressed as a percentage of the total work and services required under this contract, the percentage of the total work represented by the work and services described in subsection iii above, **(v)** expressed as a percentage of this contract's Section 6 total compensation, the percentage of the total compensation represented by the work and services described in subsection iii above, **(vi)** the Contractor's declaration as to whether the entirety of the Contractor's work and services required in this Contract will be, or will not be, completed within the Contract's Section 6 total compensation amount, and **(vii)** any and all additional useful and/or relevant information. Each report shall be signed by a duly authorized employee of the Contractor.

NOTE: the Contractor's failure to deliver any report required herein shall be deemed a material breach of this Contract, the City hereby reserving the right to exercise all available legal remedy(ies) to address said breach.

3.14. FUNDING REQUIREMENTS. The Contractor is hereby put on notice that this Contract may be considered a public works contract, is anticipated to be funded in whole or in part by State of Connecticut Local Capital Improvement Program ("LoCIP") and/or TOWN AID ROAD PROGRAM (TAR) funds, and Contractor shall comply with all LoCIP and TAR requirements, including but not limited to State of Connecticut Set-Aside requirements (See Section 12 of this Contract), Commission on Human Rights and Opportunities (CHRO) requirements (See Section 13 of this Contract), as may be applicable, and **Attachment B-1** "Non-Discrimination Contract Language", dated REV.07012026, attached hereto and incorporated herein.

4. Responsibilities of the City. Upon the City's receipt of the Contractor's written request, the City will provide the Contractor with documents, data and other materials the City agrees are necessary and appropriate to the services to be performed by the Contractor hereunder and the City will endeavor to secure, where feasible and where the City agrees it is necessary and appropriate, materials or information from other sources requested by the Contractor for the purpose of carrying out the services under this Contract.

4.1. The City may, in its sole discretion, designate person(s) to act as the City's Project Engineer(s) and/or Manager(s) and the City may, in its sole discretion, define such person(s) authority and responsibilities.

4.2. The City reserves the right to **(i)** perform work related or unrelated to the Project with the City's own forces adjoining, adjacent to, or in the vicinity of, the Project site and/or **(ii)** let separate contracts related or unrelated to the Project for work and services adjoining, adjacent to, or in the vicinity of, the Project site. In such event, the Contractor shall afford all such parties reasonable opportunity for storage of materials and equipment and for the uninterrupted provision and delivery of such parties' work and/or services. The Contractor shall cooperate with such parties and in the case of a dispute, the decision of the City shall be complied with by all.

5. Contract Time. The Contractor shall reach Final Completion of all work and services required under this contract within **Three Hundred Sixty-Five (365) consecutive calendar days** of the City's written Notice to Proceed ("Contract Time").

5.1. On a monthly basis, the Contractor shall deliver to the City a written status report setting forth an analysis and critique of the Contractor's compliance with said schedule.

5.2. Delay Damages. Time is and shall be of the essence for all Project milestones, the Substantial Completion Date and the Final Completion Date for the Project. The Contractor further agrees that the Project shall be prosecuted regularly, diligently and uninterruptedly and at such rate of progress as will insure full completion thereof within the Contract Time stated above. It is expressly understood and agreed, by and between the Contractor and City, that the Contract Time is reasonable for the completion of the Project.

5.2.1. The Contractor shall pay to the City the sum of the greater of **ONE HUNDRED DOLLARS AND ZERO CENTS ($100.00)** per calendar day for each and every calendar day for which the Contractor is in default in completing the work beyond the Final Completion Date, Substantial Completion Date, Milestones and Phase Completion Dates, as set forth in Section 5, or the actual damages incurred by the City caused by the delay. The preceding sum is hereby agreed upon not as a penalty, but as delay damages for the delay that the City shall suffer due to such default.

5.2.2. The City shall have the right to recover all damages pursuant to any remedy at law or equity including but not limited to deducting the amount of any such damages from any monies due the Contractor under this Contract. The Contractor understands that if the entire Work or of any portion of the Work that the City has agreed to accept separately, if any, is not attained by the applicable completion dates as set forth in the entire Section 5, the City will suffer damages, which are difficult to specify accurately and ascertain. Delay damages based upon delay shall be assessed to compensate the City for all actual loss sustained by the delay, including, but not limited to, loss of use, increased cost of material or services to complete the project, loss of State funding, all other actual expense, and all other damages allowed by law, including attorney's fees.

5.3 No Damage for Delay. In no event shall the Contractor be entitled to any compensation or recovery of any damages in connection with any Delay, including, without limitation, consequential damages, lost opportunity damages, attorney's fees or other, similar remuneration. The City's exercise of any of its rights or remedies under the Contract Documents, including without limitation, ordering changes in the Work, or directing suspension, rescheduling or correction of the Work, regardless of the extent or frequency of the City's exercise of these rights has been contemplated by the parties and shall not be construed as an exception.

6. Compensation. The City shall compensate the Contractor for satisfactory provision of all of the goods and services set forth in this Contract as follows in this Section 6. No claims for additional compensation will be considered for conditions made known to the Contractor prior to bidding. No claims for additional compensation will be considered on account of failure of the Contractor to completely inform itself as required herein above.

6.1. Fee Schedule. The fee payable to the Contractor shall be in accordance with the Contractor's response to **RFP No. 8890**, and Contractor's Price Proposal, dated September 1, 2026, and all applicable fully executed Task Orders and issued Purchase Orders.

6.2. Limitation of Payment. Compensation to the Contractor is limited to those fees set forth in Section 6.1. above and is further limited to work **(i)** performed in fact, **(ii)** conforming with this Contract, and **(iii)** accepted in writing by a duly authorized City employee. Such compensation shall be paid by the City upon its review and approval of the Contractor's invoices for payment and review of the Contractor's work, services, reports, plans, specifications, deliverables, etc. rendered and the compensation sought therefore in a form and with detail and clarity acceptable to the City.

6.2.1 Funding. In the event this Contract is funded, in whole or in part, by Federal and/or State monies, grants, loans, etc, all City payment(s) shall fully comply with all relevant Federal and State statutes and regulations. In the event this Contract is 100% funded by Federal and/or State monies, grants, loans, etc., the aggregate sum of all City payments shall not exceed the aggregate sum of such funding.

6.2.2 The Contractor and its affiliates are hereby provided with notice that the City reserves the right, in the City's sole discretion, to offset, withhold, or otherwise reduce City payment(s) to the Contractor, in an amount equaling the sum or sums of money the Contractor and/or its affiliates is/are, or become delinquent or in arrears on, regarding the Vendor's and/or its affiliates real and personal property taxes and other payment obligations to the City.

6.2.3 No Payment for Lost Profits. In no event shall the City be obligated to pay or otherwise compensate the Contractor for any lost or expected future profits.

6.2.4 Retainage. At the City's sole discretion, it hereby reserves the right to withhold as retainage five percent (5.0 %) of any payment (or monetary sum otherwise required by law) owed to the Contractor to be withheld from payments to the Contractor otherwise payable to the Contractor until such time as the Contractor's work and services to be provided under this Contact are fully completed and accepted in writing by the City. The retainage does not does not include additional sums that the City may withhold due to the Contractor's failure to comply with provisions of this Contract.

6.2.4.1 On public works contracts valued at one million dollars or more or for projects for which a construction manager has entered into a public works contract providing for a guaranteed maximum price valued at one hundred fifty thousand dollars or more, C.G.S. § 46a-68e requires that the awarding agency "shall withhold two percent of the total contract price per month from any payment made to such contractor until such time as the contractor has submitted all compliance reports required by the Commission." The term "awarding agency" is defined by C.G.S. § 4a-60g as "a state agency or political subdivision of the state, including a municipality or quasi-public agency.

6.2.4.2 Contractor is hereby put on notice that CHRO's written approval is required prior to the City releasing withheld retainage per Section 6.2.4.1.

6.2.4.3 The two percent (2.0 %) provided in Section 6.2.4.1 is part of the five percent (5.0 %) retainage provided in Section 6.2.4, not in addition to such retainage.

6.3. Review of Work. The Contractor shall permit the City to review, at any time, all work performed under the terms of this Contract at any stage of the work. The Contractor shall maintain or cause to be maintained all records, books or other documents relative to charges, costs, expenses, fees, alleged breaches of the agreement, settlement of claims or any other matter pertaining to the Contractor's demand for payment. The City shall not certify fees for payment to the Contractor until the City has

determined that the Contractor has completed the work in accordance with the requirements of this Contract.

6.4. Proposal Costs. All costs of the Contractor in preparing its proposal for **RFP No. 8890** shall be solely borne by the Contractor and are not included in the compensation to be paid by the City to the Contractor under this Contract or any other agreement.

6.5. Payment for Services, Materials, Appliances, Employees. The Contractor shall be responsible to the City for the suitability of services, materials and equipment furnished to comply fully with the requirements set forth in this Contract. The Contractor shall promptly pay all employees as their pay falls due, shall pay promptly as they fall due all bills for subcontractors, materials, supplies and services going into the work, and all bills for insurance, bonds, Worker's Compensation coverage, Federal and State Unemployment Compensation, and Social Security charges applicable to this Project. Before final City payment is made, the Contractor shall furnish to the City a sworn, notarized, affidavit stating that all of the foregoing payment obligations have been fully completed.

6.6. Liens. Neither the City's final payment nor any part of the retained percentage, if any, shall become due until the Contractorshall deliver to the City a complete release of all liens arising out of this Contract, or receipts in full in lieu thereof, and, in either case, an affidavit that so far as the Contractor has knowledge or information, the releases and receipts include all the labor and material for which a lien could be filed; but the Contractor may, if any subcontractor refuses to furnish a release or receipt in full, furnish a bond satisfactory to the City, to indemnify it against any lien. If any lien remains unsatisfied after all payments are made, the Contractor shall refund to the City all moneys that the City may be compelled to pay in discharging such a lien, including all costs and a reasonable attorney's fee.

6.7. No Payment for Lost Profits. In no event shall the City be obligated to pay or otherwise compensate the Contractor for any lost or expected future profits.

7. Warranty of the Contractor. Contractor warrants to the City that all materials, supplies, components, equipment, etc. furnished under this Contract shall be new and of good quality, except as otherwise expressly stated and permitted by the City elsewhere in this Contract. The Contractor warrants that none of its work shall be defective. The Contractor shall be liable to repair and install and/or replace without charge any service, component, equipment or part thereof which is defective or does not conform with this Contract within the greater of (i) **three hundred sixty-five (365)** calendar days after the City delivers its written notice of its acceptance of the Project and statement therein establishing the final completion date, or (ii) that time period or date expressly stated elsewhere in this Contract or **Attachment A**.

7.1. The Contractor further warrants that all materials, supplies, services, components, equipment, reports, plans, drawings, deliverables, incidentals, etc., shall be free from any and all defects caused by faulty design, faulty material or poor

workmanship. The Contractor shall supply to the City copies of any written manufacturer's warranties and guarantees. The Contractor's foregoing warranty obligations are in addition to, and not a limitation of, all manufacturer's warranties and guarantees, and any other remedy stated in this contract or otherwise available to the City under applicable law.

8. Passing of Title and Risk of Loss.

8.1. City beneficial use of Project equipment, materials, site-work, etc. prior to the Contractor's final completion of the Project or prior to the City's final payment for the Project shall neither act to vest title in the City nor act to transfer risk of loss from the Contractor to the City. Said title and risk shall pass to the City upon the City's final payment for the Project.

8.2. Contractor and its insurer shall assume the risks of loss or damage to the equipment up to and including the date title passes, except that City shall be responsible for loss or damage caused by City's gross negligence.

8.3. After Project equipment, materials, etc. are delivered to the Project work-site and become operable or functional, the Contractor shall not thereafter remove any such equipment, materials, etc. from the Project work-site without securing the prior written consent of an authorized City Using Agency employee.

9. Indemnification.

9.1. The Contractor shall indemnify, defend, and hold harmless the City, City's Boards, and Board of Education, commissions, agents, officials and employees from and against all claims, suits, damages, losses, judgments, costs and expenses including attorney's fees arising out of or resulting from the delivery of the labor, services, equipment, materials, reports, plans, specifications, design, drawings, deliverables, incidentals, etc. provided that any such claims, suits, damages, losses, judgments, costs or expenses **(i)** are attributable to bodily injury, sickness, disease or death, or to injury to or destruction of tangible property, including the loss of use resulting there from, **(ii)** are alleged to be caused in whole or in part by any willful, intentional, negligent, or reckless act or omission of the Contractor, its employees, any subcontractor or consultant, anyone directly or indirectly employed by any of them or anyone for whose acts any of them may be liable, regardless of whether or not it is caused in part by a party indemnified hereunder; **(iii)** enforcement action or any claim for breach of the Contractor 's duties hereunder or **(iv)** claim for intangible loss(es) including but not limited to business losses, lost profits or revenue, regardless of whether or not it is caused in part by a party indemnified hereunder.

9.2. In any and all claims against the City, Board of Education or any of City's boards, agents, employees or officers by the Contractor or any employee of the Contractor, any subcontractor or consultant, anyone directly or indirectly employed by any of them or anyone for whose acts any of them may be liable, the indemnification obligation under

Paragraph 9 above, shall not be limited in any way by any limitation on the amount or type of damages, compensation or benefits payable by or for the Contractor or any subcontractor under Worker's Compensation Acts, disability benefit acts or other employee benefit acts.

9.3. The Contractor understands and agrees that any insurance required by this Contract, or otherwise provided by the Contractor, shall in no way limit the responsibility to indemnify, defend, keep and hold harmless the City, the Board of Education, any of City's boards, agents, employees as provided in this Contract.

9.4. The Contractor expressly understands and agrees that any performance bond or insurance protection required by this Contract, or otherwise provided by the Contractor, shall in no way limit the responsibility to indemnify, keep and save harmless and defend the City and the City's boards, agents, employees or officers as provided herein.

9.5. Royalties and Patents. The Contractor shall, for all time, secure to the City the free and undisputed right to the use of any and all patented articles and methods used in the work and shall defend at Contractor's own expense any and all suits for infringement or alleged infringement of such patents, and in the event of adverse award under patent suits, the Contractor shall pay such awards and hold the City harmless in connection with any patent suits that may arise as a result of installations made by the Contractor and as to any award made thereunder.

9.6. In the event this Contract and/or the Contractor's, or its subcontractor, work and services provisioned hereunder is/are subject to the provisions of any Federal or State statute or regulations, or the City Charter or City Ordinance, the Contractor shall indemnify, defend and hold harmless the City from any fine, penalty or other amounts imposed on the City under said statutes, regulations, Charter or Ordinances, if caused by Contractor, or its subcontractor, omission or commission.

10. Contract Bonds. In the City's sole discretion, the City may elect to require the Contractor to furnish to the City a performance bond or payment bond or both, each bond written for a penal sum equaling the "Total Compensation" amount of each Task Order, in a form and with a surety, acceptable to the City. If the City elects to require such bonds, the City shall include such requirement in any Task Order for which such bonds will be required by the City. The Contractor shall then furnish to the City any required bond prior to the issuance of the corresponding Purchase Order by the City. The bonds shall continue in effect for the greater of **(i)** the warranty period set forth in Section 7 of this Contract, or **(ii)** 365 calendar days after City delivers its written notice of its acceptance of all projects identified in any fully executed Task Order.

11. Contractor's Insurance.

11.1. The Contractor shall not commence work under this Contract until all insurance required under this Section 11 has been obtained by the Contractor and such insurance has been approved by the City. The Contractor shall not allow any subcontractor to

commence work on any subcontract until all insurance required of any such subcontractor has been so obtained and approved by the City. Insurance shall be provided by insurers, satisfactory to the City and authorized to do business in the State of Connecticut, an "A-" Best's Rating and at least a Class VIII or better financial size category as shown in the most current A.M. Best Company ratings.

11.2. At no additional cost to the City, the Contractor shall purchase and maintain the insurance coverages set forth below which shall protect the City from claims which may arise out of or result from the Contractor's obligation under this Contract, whether such obligations are the Contractor's or subcontractor or person or entity directly or indirectly employed by said Contractor or subcontractor, or by any person or entity for whose acts said Contractor or subcontractor may be liable.

11.3. Each insurance policy shall state that the insurance company shall agree to investigate and defend the insured against all claims for damages, even if groundless. If any insurance required herein is to be issued or renewed on a claims made form as opposed to an occurrence form, the retroactive date for coverage shall be no later than the commencement date of this Contract and shall provide that in the event of cancellation or non-renewal, the discovery period for insurance claims ("Tail Coverage") shall be available for at least 60 months.

11.4. The following policies with stated limits shall be maintained, in full force and effect, at all times during which the services are to be performed by the Contractor:

11.4.1 General Liability Insurance:
$1,000,000.00 each Occurrence
$2,000,000.00 General Aggregate
$2,000,000.00 Products and Completed Operations Aggregate

11.4.2 Automobile Liability Insurance:
$1,000,000.00 combined single limit (CSL)
Any Auto, All Owned and Hired Autos

11.4.3 Workers' Compensation:
Statutory Limits within the State of Connecticut:
Employers' Liability:
$1,000,000.00 EL Each Accident
$1,000,000.00 EL Disease Each Employee
$1,000,000.00 EL Disease Policy Limit

11.4.4 Excess/Umbrella Liability Insurance:
$1,000,000.00 each Occurrence
$1,000,000.00 Aggregate

11.5. Failure to Maintain Insurance: In the event the Contractor fails to maintain the minimum required coverage as set forth herein, the City may at its option purchase same, and offset the Contractor's invoices for the cost of said insurance.

11.6. Cancellation: The City of Waterbury shall receive written notice of cancellation from the Contractor at least thirty (30) calendar days prior to the date of actual cancellation, regardless of the reason for such cancellation.

11.7. Certificates of Insurance: All Contractor's Insurance except Workers' Compensation shall be endorsed to add the City of Waterbury and its Board of Education as additional insured and provide waiver of subrogation on all policies. The insurance afforded the additional insured shall be primary and non-contributory insurance and the coverage and limits provided under the Contractor's policies shall not be reduced or prorated by the existence of any other insurance applicable to any loss the additional insured may have suffered. Prior to the execution of this Contract by the City, the Contractor shall furnish to the City, subject to City approval, certificate(s) of insurance and Additional Insured Endorsement and Waiver of Subrogation Endorsement verifying the above coverages, including the naming of the City of Waterbury, as follows: **"The City of Waterbury and its Board of Education are listed as Additional Insured on a primary and non-contributory basis on all policies except Workers' Compensation. All policies shall include a Waiver of Subrogation."** The City's RFP Number must be shown on the certificate of insurance to assure correct filing. The Contractor must supply replacement/renewal certificates at least 30 days prior to the expiration of the policy(ies). Said certificates shall contain a provision that coverage afforded under the policies shall not be cancelled or reduced for any reasons unless notice of than thirty (30) calendar days has been mailed to the City's Using Agency and a copy to the City's Office of Corporation Counsel, 235 Grand Street, Waterbury, CT 06702.

11.8. No later than thirty (30) calendar days after Consultant receipt, the Consultant shall deliver to the City a copy of the Consultant's insurance policies and endorsements and riders.

11.9. If any policy is written on a "Claims Made" basis, the policy must be continually renewed for a minimum of two (2) years from the completion date of this contract. If the policy is replaced and/or the retroactive date is changed, then the expiring policy must be endorsed to extend the reporting period for claims for the policy in effect during the contract for two (2) years from the completion date.

11.10. Original, completed Certificates of Insurance must be presented to the City of Waterbury prior to contract issuance. Contractor agrees to provide replacement/renewal certificates at least thirty (30) calendar days prior to the expiration date of the policies. Should any of the above described policies be cancelled, limits reduced or coverage altered, thirty (30) calendar days written notice must be given to the City of Waterbury.

12. Conformance with Federal, State and Other Jurisdictional Requirements. By executing this Contract, the Contractor represents and warrants that, at all pertinent and relevant

times to the Contract, it has been, is and will continue to be in full compliance with all applicable statutes, acts, ordinances, guidelines, resolutions, orders, judgments, decrees, injunctions, rules, and regulations of all government authorities applicable to performance by the Contractor of services hereunder, including those having jurisdiction over its registration and licensing to perform services hereunder; including, but not limited to, the following: EQUAL EMPLOYMENT OPPORTUNUTY; COPELAND ANTI-KICKBACK ACT, as supplemented in the Department of Labor Regulations (29 CFR, Part 3); DAVIS BACON ACT as supplemented by Department of Labor Regulations (29 CFR Part 5); Section 103 and 107 of the Contract Work Hours and Safety Standards Act, as supplemented by the Department of Labor Regulations (29 CFR Part 5); the HOUSING and COMMUNITY DEVELOPMENT ACT of 1974, as amended, TITLE 31 and Section 12-430(7) of the State of Connecticut General Statutes. All applicable sections of the City Charter and Code of Ordinances are incorporated by reference made a part hereof.

12.1. Taxes-Federal, State and Local. The City is exempt from Federal Excise and Transportation, State and Local Sales and Use Taxes, including without limitation, taxes that would otherwise be imposed upon the Contractor for transactions required or necessitated hereunder between it and its subcontractors, suppliers, etc. The Contractor remains liable, however, for any applicable tax obligations it incurs. Moreover, the Contractor represents that the bid and pricing contained in this Contract do not include the amount payable for said taxes.

12.2. Labor and Wages-Federal and State. The Contractor and its subcontractors shall conform to Federal and State of Connecticut labor laws, and all other laws, ordinances, and legal requirements affecting the work in Connecticut.

12.2.1 The Contractor is aware of, and shall comply with, the provisions of Title 31, §53 of the Connecticut General Statutes, latest revision (the "Act"), concerning the payment of minimum wages for work on public facilities. The provisions of the Act are hereby incorporated by reference and made a part of this Contract. The Act provides that the Connecticut prevailing wage law applies to certain remodeling, refurbishing, alteration, repair and new construction. The wages paid on an hourly basis to any person performing the work of any mechanic, laborer or worker on the work herein contracted to be done and the amount of payment or contribution paid or payable on behalf of each such person to any employee welfare fund, as defined in Con. Gen. Stat. 31-53(i), shall be at a rate equal to the rate customary or prevailing for the same work in the same trade or occupation in the town in which such public works project is being constructed. Any contractor who is not obligated by agreement to make payment or contribution on behalf of such persons to any such employee welfare fund shall pay to each mechanic, laborer or worker as part of such person's wages the amount of payment or contribution for such person's classification on each pay day.

12.2.2 The Contractor is aware of, and shall comply with, the provisions of both the Federal Davis-Bacon Act and the Federal American Recovery and

Reinvestment Act of 2009, the provisions of both acts hereby incorporated by reference and made a part of this Contract. The Federal Davis-Bacon Act provides that Federal wage rate laws apply to certain federally funded contracts. The American Recovery and Reinvestment Act ("ARRA") provides that Federal wage rate laws apply to all ARRA funded contracts regardless of the contract's dollar value.

12.3. Compliance with Chapters 34, 38, and 39 of the Code of Ordinances of the City. By executing this Contract, the Contractor represents and warrants that, at all pertinent and relevant times to the Contract, it has been, is and will continue to be in full compliance with the provisions of Chapters 34, 38, and 39 of the Code of Ordinances of the City and well as any other relevant provisions of the Charter and the Code of Ordinances.

12.4. Compliance with CONN. GEN. STAT. § 4a-60g, amended by Public Act 25-168, and, as may be amended from time to time.

12.4.1 Definitions – For purposes of Section 12.4 and Section 13.3 of this Contract:

i. "Awarding agency" means a state agency or political subdivision of the state, including a municipality or quasi-public agency.

ii. "Minority business enterprise" means any small contractor (A) fifty-one per cent or more of the capital stock, if any, or assets of which are owned by a person or persons who (i) exercise operational authority over the daily affairs of the enterprise, (ii) have the power to direct the management and policies and receive the beneficial interest of the enterprise, (iii) possess managerial and technical competence and experience directly related to the principal business activities of the enterprise, and (iv) are members of a minority, as defined in subsection (a) of section 32-9n, or are individuals with a disability, or (B) which is a nonprofit corporation in which fifty-one per cent or more of the persons who exercise operational authority over the enterprise, (i) possess managerial and technical competence and experience directly related to the principal business activities of the enterprise, (ii) have the power to direct the management and policies of the enterprise, and (iii) are members of a minority, as defined in this subsection, or are individuals with a disability.

iii. "Public works contract" means any agreement (A) for construction, rehabilitation, conversion, extension, demolition or repair of changes or improvements in real property, and (B) that is financed in whole or in part by the state, including, but not limited to, matching expenditures, grants, loans, insurance or guarantees, where such funding equals one hundred fifty thousand dollars or more.

iv. "Small contractor" means (A) any contractor, subcontractor, manufacturer, service company or corporation that (i) maintains its principal place of

business in the state, and (ii) is registered as a small business in the federal database maintained by the United States General Services Administration, as required to do business with the federal government, or (B) any nonprofit corporation that (i) maintains its principal place of business in the state, (ii) that had gross revenues not exceeding twenty million dollars in the most recently completed fiscal year prior to such application, and (iii) that is independent.

12.4.2 The Contractor and subcontractor shall comply with the specific requirements of the State of Connecticut Set Aside Program, CONN. GEN. STAT. § 4a-60g, **amended by Public Act 25-168, and as may be amended from time to time,** if the public works contact awarded to the Contactor is funded as provided in 12.4.3 below.

12.4.3 The Contactor shall be subject to the following set-aside requirements if the public works contact, is funded in whole or in part by the State of Connecticut, and is equal to, or in excess of ONE HUNDRED FIFTY THOUSAND DOLLARS ($150,000.00).

12.4.4 Set-Aside requirements – Any contractor awarded a public works contract, on the basis of competitive bidding procedures, shall comply with the following Set –Aside requirements:

i. This contract is subject to state contract compliance requirements, including nondiscrimination statutes and spending allocation goals. There is $TBD in state-funding for this project. State law requires project-specific goals be set for this project based on the project's needs and available Small Business Enterprises ("SBEs") and Minority Business Enterprises ("MBEs"). The SBE goal for this project is N/A. The MBE goal for this project is N/A. The selected contractor must demonstrate good faith effort to meet the spending allocation goals.

12.4.5 No Affiliated Subcontracting to Satisfy Goal. The Contractor shall not subcontract with an affiliated person or entity in violation of Conn. Gen. Stat. § 4a-60g. An affiliated contractor or subcontractor shall not be credited toward the City's spending-allocation goals where such credit is prohibited by law.

12.4.5.1 Changes in Subcontractors. The Contractor shall not replace, terminate, materially reduce the work of, or otherwise alter the participation of a small contractor or minority business entity identified for purposes of satisfying a spending allocation goal without providing the City with prior written notice and satisfying all requirements imposed by the Commission on Human Rights and Opportunities and applicable law. The Contractor shall document good-faith efforts to replace any subcontractor with another qualified certified contractor where required by law or the Commission on Human Rights and Opportunities.

12.4.6 Failure of the Contractor or subcontractor to comply with the State of Connecticut Set-Aside program requirements, including, but not limited to, good faith efforts plan and compliance report submissions, shall be a material breach of this Contract. If required by the City, the Contractor shall provide the City with evidence of submission and disposition of all required State of Connecticut Set-Aside programs reports.

13. Discriminatory Practices. In performing this Contract, the Contractor shall not discriminate against any employee or applicant for employment, with respect to his or her hire, tenure, terms, conditions or privileges of employment, or any matter directly or indirectly related to employment, because of race, color, sex, age, religious creed, disability, national origin or ancestry, marital status, family status, prior psychiatric treatment, health care, military status or source of income or because of a handicap that is unrelated to the employee's or the applicant's ability to perform the duties of a particular job or position. Subcontracts with each subcontractor shall contain a provision requiring non-discrimination in employment as herein specified. This covenant is required pursuant to §93.04 of the Code of Ordinances of the City and any breach thereof may be regarded as a material breach of this Contract. Said provisions with subcontractors shall require conformity and compliance with all local, state and federal laws, rules and regulations and Executive orders pertaining to discrimination and equal opportunity requirements.

13.1. Discrimination Because of Certain Labor Matters. No person employed on the work covered by this Contract shall be discharged or in any way discriminated against because such person has filed any complaint or instituted or caused to be instituted any proceeding or has testified or is about to testify in any proceeding under or related to the labor standards applicable hereunder to its employer.

13.2. Equal Opportunity. In its execution of the performance of this Contract, the Contractor shall not discriminate and shall comply with applicable laws prohibiting discrimination on the grounds of race, color, religion, sex, national origin or citizenship status, age or handicap. The Contractor agrees to comply with all local, state and federal laws, rules and regulations and Executive orders pertaining to discrimination and equal opportunity requirements, and will require the same of all subcontractors

13.3. Affirmative Action/Nondiscrimination.

13.3.1. Pursuant to CONN. GEN. STAT. § 4a-60, as amended by Public Act 25-168, and as may be amended from time to time, the following are required for every Public Works Contract:

(b) Except as provided in section 10a-151i, every contract to which an awarding agency is a party shall contain the following provisions:

(1) The contractor agrees and warrants that in the performance of the contract such contractor will not discriminate or permit discrimination against any person or group of persons on the grounds of race, color, religious creed, age, marital status, national origin, ancestry, sex, sexual

orientation, gender identity or expression, status as a veteran, status as a victim of domestic violence, intellectual disability, mental disability or physical disability, including, but not limited to, blindness, unless it is shown by such contractor that such disability prevents performance of the work involved, in any manner prohibited by the laws of the United States or of the state of Connecticut; and the contractor further agrees to take affirmative action to ensure that applicants with job-related qualifications are employed and that employees are treated when employed without regard to their race, color, religious creed, age, marital status, national origin, ancestry, sex, gender identity or expression, sexual orientation, status as a veteran, status as a victim of domestic violence, intellectual disability, mental disability or physical disability, including, but not limited to, blindness, unless it is shown by such contractor that such disability prevents performance of the work involved;
(2) The contractor agrees, in all solicitations or advertisements for employees placed by or on behalf of the contractor, to state that it is an "affirmative action-equal opportunity employer" in accordance with regulations adopted by the Commission on Human Rights and Opportunities;
(3) The contractor agrees to provide each labor union or representative of workers with which such contractor has a collective bargaining agreement or other contract or understanding and each vendor with which such contractor has a contract or understanding, a notice to be provided by the Commission on Human Rights and Opportunities advising the labor union or workers' representative of the contractor's commitments under this section, and to post copies of the notice in conspicuous places available to employees and applicants for employment;
(4) The contractor agrees to comply with each provision of this section and sections 46a-68e and 46a-68f and with each regulation or relevant order issued by said commission pursuant to sections 46a-56, 46a-68e, 46a-68f and 46a-86; and
(5) The contractor agrees to provide the Commission on Human Rights and Opportunities with such information requested by the commission, and permit access to pertinent books, records and accounts, concerning the employment practices and procedures of the contractor as relate to the provisions of this section and section 46a-56.

(c) If the contract is a public works contract, the contractor agrees and warrants that he or she will make good faith efforts to employ minority business enterprises as subcontractors and suppliers of materials on such public works project.

(d) Except as provided in section 10a-151i:

(1) Any contractor who has one or more contracts with an awarding agency or who is a party to a public works contract shall include a nondiscrimination affirmation provision certifying that the contractor understands the obligations of this section and will maintain a policy for the duration of the contract to assure that the contract will be performed in compliance with the nondiscrimination requirements of subsection (b) of this section. The authorized signatory of the contract shall demonstrate his or her understanding of this obligation by (A) initialing the nondiscrimination affirmation provision in the body of the contract, (B) providing an affirmative response in the required online bid or response to a proposal question which asks if the contractor understands its obligations, or (C) signing the contract.

(e) Determination of the contractor's good faith efforts shall include, but shall not be limited to, the following factors: The contractor's employment and subcontracting policies, patterns and practices; the timing and value of bids; affirmative advertising, recruitment and training; technical assistance activities and such other reasonable activities or efforts as the Commission on Human Rights and Opportunities may prescribe that are designed to ensure the participation of minority business enterprises in public works projects.

(f) The contractor shall develop and maintain adequate documentation, in a manner prescribed by the Commission on Human Rights and Opportunities, of its good faith efforts.

(g) The contractor shall include the provisions of subsections (b) and (c) of this section in every subcontract or purchase order entered into in order to fulfill any obligation of a contract with the state, and in every subcontract entered into in order to fulfill any obligation of a public works contract, and such provisions shall be binding on a subcontractor, vendor or manufacturer, unless exempted by regulations or orders of the Commission on Human Rights and Opportunities.

13.3.2. Pursuant to CONN. GEN. STAT. § 4a-60a, as amended by Public Act 23-204, and as may be amended from time to time, the following are required for every Public Works Contract:

(a) Every contract to which an awarding agency is a party, every contract for a quasi-public agency project and every public works contract shall contain the following provisions:

(1) The contractor agrees and warrants that in the performance of the contract such contractor will not discriminate or permit discrimination against any person or group of persons on the grounds of sexual orientation, in any manner prohibited by the laws of the United States or of the state of Connecticut, and that employees are treated when employed without regard to their sexual orientation;

(2) The contractor agrees to provide each labor union or representative of workers with which such contractor has a collective bargaining agreement or other contract or understanding and each vendor with which such contractor has a contract or understanding, a notice to be provided by the Commission on Human Rights and Opportunities advising the labor union or workers' representative of the contractor's commitments under this section, and to post copies of the notice in conspicuous places available to employees and applicants for employment;

(3) The contractor agrees to comply with each provision of this section and with each regulation or relevant order issued by said commission pursuant to section 46a-56;

(4) The contractor agrees to provide the Commission on Human Rights and Opportunities with such information requested by the commission, and permit access to pertinent books, records and accounts, concerning the employment practices and procedures of the contractor which relate to the provisions of this section and section 46a-56; and

(5) Nondiscrimination affirmation provision. The Contractor understands the obligations of this section 13.3 and will maintain a policy for the duration of the Contract to assure that the Contract will be performed in conformance with the nondiscrimination requirements of this section 13.3. The authorized signatory of the Contract shall demonstrate his or her understanding of this obligation by either (A) initialing the nondiscrimination affirmation provision in the body of the Contract, [or] (B) providing an affirmative response in the required online bid or response to a proposal question which asks if the Contractor understands its obligations, or (C) signing the Contract.

14. Good Jobs Ordinance

14.1. Conformance With An Ordinance Concerning The Hiring Of Waterbury Residents On Certain Publicly-Funded Construction Projects.

14.1.1 The Contractors and its Subcontractors shall comply with the specific requirements of "An Ordinance Concerning the Hiring of Waterbury Residents on Certain Publicly-Funded Construction Projects" (the "Good Jobs Ordinance"), as may be amended from time to time and as set forth in Chapter 34 of the Code of Ordinances of the City. While the principal provisions of the ordinance are summarized as set forth in paragraphs C-H below, the Contractor does hereby acknowledge that it has reviewed a copy of the Good Jobs Ordinance and that it has read the Ordinance and that Contractor is familiar with the obligations imposed on the Contractor and each Subcontractor by the Good Jobs Ordinance.

14.1.2 Failure of the Contractor or its Subcontractors to comply with the Good Jobs Ordinance shall be a material breach of this Agreement.

14.1.3 This paragraph shall apply to a Covered Project, as that term is defined in the Good Jobs Ordinance, in the City with a value of $500,000.00 or greater and only to the extent permitted by federal and state law.

14.1.4 Definitions. For purposes of this paragraph:

i. "Administrator" shall be defined as it is in the Good Jobs Ordinance.

ii. "Apprentice" shall be defined as it is in the Good Jobs Ordinance.

iii. "Basic Skilled Worker" shall be defined as it is in the Good Jobs Ordinance.

iv. "Contractor" shall be defined as it is in the Good Jobs Ordinance.

v. "Covered Project" shall be defined as it is in the Good Jobs Ordinance.

vi. "Hiring Goal" shall be defined as it is in the Good Jobs Ordinance.

vii. "Resident" shall be defined as it is in the Good Jobs Ordinance.

viii. "Subcontractor" shall be defined as it is in the Good Jobs Ordinance and shall include the Contractor's direct subcontractor providing construction work and all lower tiered (level) providers of construction work.

14.1.5 Hiring Goals. If this Agreement requires the Contractor to perform work on a Covered Project, the Contractor and each Subcontractor shall have as its hiring goals:

i. at least thirty percent (30%) of its total worker hours performed by City Residents, and

ii. at least twenty-five percent (25%) of construction trade jobs shall go to Apprentices and/or Basic Skilled Workers, and

iii. at least seventy percent (70%) of all "new hires" (as that term is defined in the Good Jobs Ordinance) shall be "economically disadvantaged" individuals (as that term is defined in the Good Jobs Ordinance), and

iv. a minimum of five percent (5%) of the construction workforce labor hours will be local resident, minority artisans, and

v. a minimum of five percent (5%) of the construction workforce labor hours will be women, and

vi. a minimum of ten percent (10%) of the total work hours shall be allocated for minorities, or

vii. as may otherwise be required by any superseding Federal or State employment discrimination prohibition laws.

14.1.6 Good Faith Efforts. The Contractor and each Subcontractor shall engage in Good Faith Efforts to comply with the Hiring Goals. For the purposes

of this paragraph, the term "Good Faith Efforts" shall have the same meaning as it does in the Good Jobs Ordinance.

The Contractor and each Subcontractor shall individually implement Good Faith efforts to satisfy the Hiring Goals.

14.1.7 Action Plan and Pre-Construction Meeting. Not later than fourteen (14) business days prior to the scheduled commencement date for construction, the Contractor shall submit a written plan-of-action to the City and to the Administrator of the Good Jobs Ordinance defining how the Contractor, and each Subcontractor, shall implement Good Faith Efforts to fulfill the Hiring Goals. Each plan-of-action shall include the anticipated number of job positions required for the Work. Not later than five (5) business day prior to the commencement date of construction, the Contractor must attend a mandatory "pre-construction" meeting with the City to review all plans-of-action and other relevant materials. No construction work shall proceed absent this pre-construction meeting.

14.1.8 Other Contractor Obligations. In addition to the foregoing, the Contractor shall ensure that all Subcontractor contracts and agreements expressly set forth and state as binding obligations therein, subject to appropriate party name change, the above Hiring Goals and Good Faith Efforts. The Contractor shall be accountable for, and liable to the City for, Contractor and each Subcontractor compliance with Hiring Goals and Good Faith efforts.

i. The Contractor shall meet with the Administrator no less than four (4) weeks prior to the commencement of construction on a Covered Project and provide the Administrator with the number of job positions to be created by the project by trade and the qualifications by job tile.

ii. The Contractor shall be required to produce Contractor and Subcontractor documentation that may be required under the provisions of the Good Jobs Ordinance or that the City or the Administrator reasonably believes will assist the City or the Administrator with their evaluation of Hiring Goals and Good Faith Efforts.

iii. The Contractor shall deliver weekly certified payroll records to the City within five (5) working days of the end of each payroll period. Moreover, the Contractor shall require each Subcontractor to create weekly certified payroll records.

iv. The Contractor's and each Subcontractor's payroll records shall include the person-hours, the residential address, race, gender, hiring date, and apprentice (job) classification of all personnel employed under this Agreement and all Contracts and Sub-Contracts thereunder. The Contractor and each Subcontractor shall mark their respective final payroll period records as being final and be signed by an authorized

officer or employee.

14.2 Liquidated Damages Applicable To Section 14.1

14.2.1 If the City finds that the Contractor, or a Subcontractor, has failed to achieve Hiring Goals during any five (5) day work period (Monday through Friday), the City shall:

i. issue a written notice to the Contractor specifying the matters constituting such failure and the time period within which Good Faith Efforts documentation must be delivered to the City for its evaluation.

ii. if the Good Faith documentation is not provided or, if provided, it fails to demonstrate compliance with Good Faith Efforts, the Contractor shall, for each failure by the Contractor or a Subcontractor to achieve the Hiring Goals during a full five day work period, pay to the City one thousand dollars ($1,000.00) as liquidated damages.

14.2.2 If the City finds that the Contractor, or a Subcontractor, has failed to deliver weekly certified payroll records to the City within five (5) working days of the end of each payroll period the Contractor shall, as liquidated damages pay one thousand dollars ($1,000.00) to the City for each week of ongoing violation.

14.2.3 The City shall provide the Contractor with an invoice identifying all sums due the City, as liquidated damages, as a result of the Contractor or a Subcontractor's failure to comply with the Good Jobs Ordinance as set forth above.

14.2.4 No portion of any invoice submitted by a Contractor that is subject to liquidated damages shall be paid by the City until such time as all liquidated damages relating to that invoice have been paid to the City.

14.2.5 The foregoing liquidated damages provisions shall be expressly set forth, subject to appropriate party name adjustments, as material provisions in all Contracts that the Contractor has with Subcontractors and the Contractor is obligated hereunder to enforce compliance in such Contracts with Subcontractors.

14.2.6 Any payment of liquidated damages hereunder shall not preclude a later claim, nor any later finding of a breach, or any payment of additional damages related to such later claim.

15. Housing and Urban Development Section 3 Clause. In the event this Contract is funded, in whole or in part, through Housing and Urban Development assistance, 24 C.F.R. §135.38 may apply and the Contractor shall then be required to comply with the following (referred to as the "Section 3 clause"):

15.1. The work to be performed under this Contract is subject to the requirements of Section 3 of the Housing and Urban Development Act of 1968, as amended, 12 U.S.C. § 1701u (Section 3). The purpose of Section 3 is to ensure that employment and other economic opportunities generated by HUD assistance or HUD-assisted Projects covered by Section 3, shall, to the greatest extent feasible, be directed to low and very low-income persons, particularly persons who are recipients of HUD assistance for housing.

15.2. The parties to this Contract agree to comply with HUD's regulations in 24 C.F.R. part 135, which implement Section 3. As evidenced by their execution of this Contract, the parties to this Contract certify that they are under no contractual or other impediment that would prevent them from complying with the part 135 regulations.

15.3. The Contractor agrees to send to each labor organization or representative of workers with which the Contractor has a collective bargaining agreement or other understanding, if any, a notice advising the labor organization or workers' representative of the Contractor's commitments under this Section 3 clause, and will post copies of the notice in conspicuous places at the work site where both employees and applicants for training and employment positions can see the notice. The notice shall describe the Section 3 preference, shall set forth minimum number and job titles subject to hire, availability of apprenticeship and training positions, the qualifications for each; and the name and location of the person(s) taking applications for each of the positions; and the anticipated date the work shall begin.

15.4. The Contractor agrees to include this Section 3 clause in every subcontract subject to compliance with regulations in 24 C.F.R. part 135, and agrees to take appropriate action, as provided in an applicable provision of the subcontract or in this Section 3 clause, upon a finding that the subcontractor is in violation of the regulations in 24 C.F.R. part 135. The Contractor will not subcontract with any subcontractor where the contractor has notice or knowledge that the subcontractor has been found in violation of the regulations in 24 C.F.R. part 135.

15.5. The Contractor will certify that any vacant employment positions, including training positions, that are filled **(i)** after the Contractor is selected but before the Contract is executed, and **(ii)** with persons other than those to whom the regulations of 24 C.F.R. part 135 require employment opportunities to be directed, were not filled to circumvent the Contractor's obligations under 24 C.F.R. part 135.

15.6. Noncompliance with HUD's regulations in 24 C.F.R. part 135 may result in sanctions, termination of this contract for default, and debarment or suspension from future HUD assisted contracts.

15.7. With respect to work performed in connection with Section 3 covered Indian housing assistance, section 7(b) of the Indian Self-Determination and Education Assistance Act (25 U.S.C. § 450e) also applies to the work to be performed under this Contract. Section 7(b) requires that to the greatest extent feasible **(i)** preference and

opportunities for training and employment shall be given to Indians, and **(ii)** preference in the award of contracts and subcontracts shall be given to Indian organizations and Indian-owned Economic Enterprises. Parties to this Contract that are subject to the provisions of Section 3 and section 7(b) agree to comply with Section 3 to the maximum extent feasible, but not in derogation of compliance with section 7(b).

16. Termination.

16.1. Termination of Contract for Cause. If, through any cause, the Contractor shall fail to fulfill in a timely and proper manner its obligations under this Contract, or if the Contractor shall violate any of the covenants, agreements, or stipulations of this Contract, the City shall thereupon have the right to terminate this Contract by either **(i)** giving written notice to the Contractor of a date certain by which Contractor shall, to the written satisfaction of the City, cure after which and without further action by any party, such termination shall automatically become effective and binding, or **(ii)** giving written notice to the Contractor specifying the effective date of such termination at least five (5) business days before the effective date of such termination.

16.1.1 In the event of a termination, all finished or unfinished documents, data, studies, reports, plans, specifications, drawings, supplies, services, etc. prepared by the Contractor under this Contract shall, at the option of the City, become the City's property, and the Contractor shall be entitled to receive just and equitable compensation for any satisfactory work completed for such.

16.1.2 Notwithstanding the above, the Contractor shall not be relieved of liability to the City for damages sustained by the City by virtue of any breach of this Contract by the Contractor, and the City may withhold any payments to the Contractor for the purpose of setoff until such time as the exact amount of damages due the City from the Contractor is determined.

16.2. Termination for Convenience of the City. The City may terminate this Contract at any time for the convenience of the City, by a notice in writing from the City to the Contractor. If this Contract is terminated by the City as provided herein, the Contractor will be paid an amount which bears the same ratio to the total compensation as the services actually performed bear to the total services of the Contractor covered by this Contract, less payments of compensation previously made.

16.3. Termination for Non-Appropriation or Lack of Funding. The Contractor acknowledges that the City is a municipal corporation and that this Contract is subject to the appropriation and disbursement of funds by the City sufficient for this Contract for each budget year in which this Contract is in effect. The Contractor therefore agrees that the City shall have the right to terminate this Contract in whole or in part without penalty to the City in the event that sufficient funds to provide for City payment(s) under this Contract is not appropriated, not authorized, or not made available, or such funding has been reduced. In the event this Contract is subject, in whole or in part, to the appropriation and disbursement of Federal and/or State funds and those Federal and/or

State funds are not appropriated or are not disbursed to the City, the Contractor hereby agrees that the City shall have the right to terminate this Contract in whole or in part without penalty to the City.

16.3.1 Effects of Non-Appropriation. If funds to enable the City to effect continued payment under this Contract are not appropriated, authorized or otherwise made available by law, the City shall have the right to terminate this Contract without penalty at the end of the last period for which funds have been appropriated, authorized or otherwise made available by law by giving written notice of termination to the Contractor.

16.3.2 Effects of Reduced Levels of Funding. If funding is reduced by law, or funds to pay the Contractor for the agreed to level of the products, services and functions to be provided by the Contractor under this Contract are not appropriated, authorized or otherwise made available by law, the City may, upon seven (7) business days written notice to the Contractor, reduce the level of the products, services or functions in such manner and for such periods of time as the City may elect. The charges payable under this Contract shall be equitably adjusted to reflect such reduced level of products, services or functions and the parties shall be afforded the rights set forth in this Contract.

16.3.3 No Payment for Lost Profits. In no event shall the City be obligated to pay or otherwise compensate the Contractor for any lost or expected future profits.

16.4. Rights Upon Termination.

16.4.1 Termination for Cause. In the event the City terminates this Contract for cause, the Contractor shall relinquish to the City any applicable interest, title and ownership including, but not limited to, perpetual use of any proprietary rights in and to the products and deliverables delivered to, in possession of and properly invoiced and paid for by (except to the extent such invoiced amount is disputed) the City. With regard to third party products, the Contractor shall transfer all licenses which it is permitted to transfer in accordance with the applicable third party license. The City shall have no financial obligation to compensate the Contractor for such terminated products unless payment is otherwise approved by the City prior to such termination. The Contractor shall be liable for costs incurred by the City, including but not limited to reasonable attorney fees and all court awarded fees and costs incurred in terminating this Contract in whole or in part.

16.4.2 Termination for Lack of Funding or Convenience. In the event of termination by the City for lack of funding or convenience, the City shall pay the Contractor for all labor, services, equipment, materials, reports, plans, specifications, drawings, deliverables, incidentals, etc.(including any holdbacks) installed and delivered to the City as of the Termination Date and the Contractor

shall relinquish to the City any applicable interest, title and ownership including, but not limited to perpetual use of any proprietary rights in and to said labor, services, equipment, materials, reports, plans, specifications, drawings, deliverables, incidentals, etc. delivered to, in possession of and paid for by the City (except to the extent any invoiced amount is disputed). The Contractor shall be required to exercise commercially reasonable efforts to mitigate damages.

16.4.3 Assumption of Subcontracts. In the event of termination, the City shall have the right to assume, at its option, any and all subcontracts for products, services and functions provided exclusively under this Contract.

16.4.4 Delivery of Documents. In the event of termination, **(i)** the Contractor shall promptly deliver to the City, in a manner reasonably specified by the City, all documents and other tangible items furnished by, or owned, leased, or licensed by, the City, and **(ii)** the City shall pay the Contractor for all services performed and deliverables completed and accepted (pro-rated for deliverables partially completed) prior to the effective date of the termination (except to the extent any invoice amount is disputed).

16.5. Ownership of Instruments of Service. The City acknowledges the Contractor's documents, reports, plans, specifications, drawings, deliverables, etc. created and to be created pursuant to this agreement, including electronic files, are Instruments of Service. Nevertheless, the final Instruments of Service, including, but not limited to architects, engineering, construction, and similar documents, reports, plans, specifications, drawings, deliverables, etc. prepared under this agreement shall become the property of the City upon City payment for that Instrument of Service and the City reserves the right to use the Instruments of Service.

17. Force Majeure. Contractor shall not be held responsible for delays nor be subject to liquidated damages when such delays are caused by conditions beyond its control, including without limitation:

17.1. Acts of God, fire, explosion, epidemic, cyclone, flood, war, strikes, revolution, civil commotion, or acts of public enemies; and

17.2. Change of law, order, proclamation, regulation, ordinance, or governmental requirement.

Upon cessation of work for reason of force majeure delays, Contractor shall use its best efforts to meet the schedule set forth in Section 5 of this Contract.

18. Subcontracting. The Contractor shall not, without the prior written approval of the City's Using Agency, subcontract, in whole or in part, any of the Contractor's services. Any subcontractor so approved shall be required to secure and maintain insurance coverage equal to or better than that required of the Contractor and shall name the City as an additional insured party and said subcontractors shall deliver to the City a certificate of insurance evidencing such coverages. All subcontractors shall comply with all federal, state and local, laws, regulations

and ordinances but such requirement shall not relieve the Contractor from its requirement that all services provided hereunder shall comply with all Federal, State and local, laws, regulations and ordinances.

18.1. The Contractor shall be as fully responsible to the City for the acts and omissions of its subcontractors, and of persons either directly or indirectly employed by them, as it is for the acts and omissions of persons directly employed by the Contractor.

18.2. The Contractor is responsible for and shall control activities of its subcontractors, and the subcontractors shall consult and cooperate with one another and other contractors working on the Project site. Each subcontractor shall furnish all necessary information to other subcontractors and shall lay out and install its own work so as to avoid any delays or interferences with the work of another. Any cost for changes, cutting and/or repairing, made necessary by failure to observe the above requirements shall be borne by the Contractor or subcontractor responsible for such failure or neglect.

18.3. The Contractor shall not, without the prior written approval of the City's Using Agency, substitute, terminate, replace or otherwise remove a subcontractor.

19. Assignability. The Contractor shall not assign any interest in this Contract, and shall not transfer any interest in the same (whether by assignment or novation) without the prior written approval of the City; provided, however, that claims for money due or to become due the Contractor from the City under this Contract may be assigned to a bank, trust, company, or other financial institution, or to a Trustee in Bankruptcy, without such approval. Notice of any such assignment or transfer shall be furnished promptly to the City.

20. Audit. The City reserves the right to audit the Contractor's books of account in relation to this Contract any time during the period of this Contract or at any time during the twelve month period immediately following the closing or termination of this Contract. In the event the City elects to make such an audit, the Contractor shall immediately make available to the City all records pertaining to this Contract, including, but not limited to, payroll records, bank statements and canceled checks.

21. Risk of Damage and Loss. The Contractor shall be solely responsible for causing the timely repair to and/or replacement of, City property or item(s) intended to become City property hereunder, where the need for repair or replacement was caused by the Contractor, by someone under the care and/or control of the Contractor, by any subcontractor of the Contractor, or by any shipper or delivery service. The Contractor shall be solely responsible for all costs and expenses, including but not limited to shipping, delivery, insurance, etc, associated with the foregoing repair and replacement obligation. Further, the Contractor shall be solely responsible for securing the City's written acceptance of all completed repairs and replacements required hereunder. The City hereby retains sole discretion to determine whether a repair or a replacement is the proper remedy.

22. Interest of Contractor. The Contractor covenants that it presently has no interest and shall not acquire any interest, direct or indirect, in the Project or any parcel of land therein or

any other interest which would conflict in any manner or degree with the performance of its services hereunder. The Contractor further covenants that in the performance of this Contract no person having any such interest shall be employed.

23. Entire Contract. This Contract shall constitute the complete and exclusive statement of the contract between the parties as it relates to this transaction and supersedes all previous agreements and understandings, whether written or oral, relating to such subject matter. Any amendment to this Contract must be in writing and agreed to and executed by the City and the Contractor, and must comply with the City's Charter and Code of Ordinances.

24. Independent Contractor Relationship. The relationship between the City and the Contractor is that of client and independent contractor. No agent, employee, or servant of the Contractor shall be deemed to be an employee, agent or servant of the City. The Contractor shall be solely and entirely responsible for its acts and the acts of its agents, employees, servants and subcontractors during the performance of this agreement. It is the express intention of the parties hereto, and the Contractor hereby agrees and covenants, that it and any and all third party(ies) and subcontractor(s) retained by the Contractor hereunder is/are not and shall not be deemed an employee of the City of Waterbury, but is/are and shall remain an independent contractor relative to the City and that nothing herein shall be interpreted or construed as creating or establishing the relationship of employer-employee between the City of Waterbury and the Contractor or between the City of Waterbury and any third party(ies) or subcontractor(s). Thus, the Contractor hereby covenants that it, its subcontractor(s) and third party(ies) shall not be entitled to the usual characteristics of employment, such as income tax withholding, F.I.C.A. deductions, pension or retirement privileges, Workers Compensation coverage, health benefits, etc. and that the Contractor shall be solely and entirely responsible for its acts and the acts of its agents, employees, servants, representatives, subcontractors and third party(ies).

25. Severability. Whenever possible, each provision of this Contract shall be interpreted in such a manner as to be effective and valid under applicable law. If any provision of this Contract, however, is held to be prohibited or invalid under applicable law, such provision shall be deemed restated to reflect the original intentions of the parties, as nearly as possible in accordance with applicable law, and if capable of substantial performance, the remaining provisions of this Contract shall be enforced as if this Contract was entered into without an invalid provision. If the ruling and/or controlling principle of law or equity leading to the ruling is subsequently overruled, modified or amended by legislation, judicial or administrative action, then the provision(s) in question as originally set forth in this Contract shall be deemed valid and enforceable to the maximum extent permitted by the new controlling principal of law or equity.

26. Survival. Any provisions of this Contract that impose continuing obligations on the parties shall survive the expiration or termination of this Contract for any reason.

27. Changes in the Project: Change Orders.

27.1. At the sole discretion of the City, a Change Order may be issued solely by the City to modify an existing party obligation set forth in this Contract where the scope of the Change Order is:

27.1.1 within the scope of the original Contract OR is made pursuant to a provision in the original Contract, AND

27.1.2 the Change Order monetary cost is charged solely against those funds encumbered for and at the time the Contract was originally executed by the City, that is those funds set forth in the original Contract as a not to exceed payment amount OR within the original Contract's contingency / allowance / reserve amount (if any is stated therein), AND

27.1.3 The Final Completion Date has not been changed.

27.2. Notwithstanding the foregoing, a Change Order shall not include

27.2.1 an upward adjustment to a Contractor's payment claim, or

27.2.2 a payment increase under any escalation clause set forth in the original Contract, or any Change Order, or any amendment.

27.3. That the work and/or services contemplated are necessary does not, in itself, permit a Change Order. Should the need for a Change Order arise, the request shall be reviewed and approved by the City's Using Agency and any City designated representative(s). To be binding and enforceable, a Change Order shall thereafter be signed by both the Contractor, any City designated representative(s), and a duly authorized representative of the City's Using Agency prior to the Contractor's delivery of the services, etc. contemplated in said Change Order. All Change Orders are governed by the provisions of this Contract. Any contract change NOT fully complying with this Section 27 shall be effectuated solely by an amendment to this Contract complying with Section 38.073 of the City's "Centralized Procurement System" ordinance.

28. Conflicts or Disputes. This Contract represents the concurrence between the City and the Contractor and governs all disputes between them. In the instance of a conflict or dispute over issues not specifically referenced within the Contract, the following documents shall be used as historical documents, without regard to the order of precedence, to resolve such conflicts or disputes, the historical documents are **(i)** the City's aforementioned **RFP No. 8890** and **(ii)** the Contractor's proposal responding to the aforementioned **RFP No. 8890.**

28.1. Procedure. This procedure supersedes all statements to the contrary occurring either in proposals or other prior agreements, oral or written, and all other communications between the parties relating to this subject.

28.2. Presumption. This Contract or any section thereof shall not be construed against any party due to the fact that the Contract or any section thereof was drafted by such party.

29. Disputes; Legal Proceedings; Waiver of Trial by Jury and Continued Performance. The Contractor agrees that its waives a trial by jury as to any and all claims, causes of action or disputes arising out of this Contract or services to be provided pursuant to this Contract. Notwithstanding any such claim, dispute or legal action, the Contractor shall continue to perform services under this Contract in a timely manner, unless otherwise directed by the City.

30. Binding Contract. The City and the Contractor each bind themselves, and their successors, assigns and legal representatives to the other party to this Contract and to the successors, assigns and legal representatives of such other party with respect to all covenants of this Contract.

31. Waiver. Any waiver of the terms and conditions of this Contract by either of the parties hereto shall not be construed to be a waiver of any other term or condition of this Contract.

32. Governing Laws. This Contract, its terms and conditions and any claims arising there from shall be governed by the laws of the State of Connecticut.

33. Notice. Except as otherwise specifically prohibited in this Contract, whenever under this Contract approvals, authorizations, determinations, notices, satisfactions or waivers are required or permitted, such items shall be effective and valid only when given in writing signed by a duly authorized officer of the City or the Contractor, and delivered in hand or sent by mail, postage prepaid, to the party to whom it is directed, which until changed by written notice, are as follows:

Contractor:
J & J BROTHERS, LLC
200 Pratt Street
Meriden, CT 06450-4268

City:
City of Waterbury
c/o Public Works Department
185 South Main Street, 5th Floor
Waterbury, CT 06706

With copy to:
City of Waterbury
Office of the Corporation Counsel
City Hall Municipal Building - 3rd Floor
235 Grand Street
Waterbury, CT 06702

34. City Code of Ordinances, Ethics and Conflict of Interest Code, Provisions. The Person (the term "Person" shall herein be as defined in Section 38 of the City's Code of Ordinances) supplying the labor, services, equipment, materials, reports, plans, specifications, drawings, deliverables, incidentals, etc. under this Contract shall comply with all applicable

Federal, State and Municipal statutes, regulations, charters, ordinances, rules, etc, whether or not they are expressly stated in this Contract, including but not limited to the following:

34.1. It shall be a material breach of this Contract, and, except as may be permitted by regulations or rulings of the City of Waterbury Board of Ethics it shall be a violation of the City's Code of Ordinances, for any Public Official, City Employee or Member of a Board or Commission who is participating directly or indirectly in the procurement process as set forth in the City's Code of Ordinances, including those participating in exempt transactions, to become or be the employee of any person contracting with the governmental body by whom the Official, Employee, or Board or Commission member is employed or is a member.

34.2. It shall be a material breach of this Contract, and it shall be a violation of the City's Code of Ordinances for any Person to offer, give, or agree to give any current or former Public Official, Employee or Member of a Board or Commission, or for such current or former Public Official, Employee or Member of a Board or Commission to solicit, demand, accept or agree to accept from another Person, a gratuity or an offer of employment in connection with any: decision; approval; disapproval; recommendation; preparation of any part of a program requirement or a requisition; influencing the content of any specification or procurement standard; or rendering of advice, investigation, auditing, or in any other advisory capacity in any proceeding or application, request for ruling, determination, claim or controversy, or other particular matter, pertaining to any program requirement or a Contract or Purchase Order, or to any solicitation or proposal therefore.

34.3. It shall be a material breach of this Contract and it shall be a violation of the City's Code of Ordinances for any payment, Gratuity, or offer of employment to be made as an inducement for the award of a subcontract or order, by or on behalf of a subcontractor, the prime Contractor or higher tier subcontractor or any Person associated therewith, under a Contract or Purchase Order to the City.

34.4. The value of anything transferred or received in violation of the City's Charter, Code of Ordinances, and/or regulations promulgated there under, by any Person subject to said Charter and/or Ordinances may be recovered by the City.

34.5. Upon a showing that a subcontractor made a kickback to the City, a prime Contractor or a higher tier subcontractor in connection with the award of a subcontract or order there under, it shall be conclusively presumed that the amount thereof was included in the price of the subcontract or order and ultimately borne by the City and will be recoverable hereunder from the recipient. In addition, said value may also be recovered from the subcontractor making such kickbacks. Recovery from one offending party shall not preclude recovery from other offending parties.

34.6. It shall be a material breach of this Contract and it shall be a violation of the City's Code of Ordinances for a Person to be retained, or to retain a Person, to solicit or secure a contract with the City upon an agreement or understanding for a commission,

percentage, brokerage, or contingent fee; and every Person, before being awarded a City Contract, shall deliver to the City, on a City authored form, a representation that such Person has not retained anyone in violation of this subsection 34.6, the failure to deliver said form being a material breach of this Contract and a violation of the City's Code of Ordinances. Note, however, this subsection 34.6 shall not apply to full-time Employees who, as a condition of their employment, may be entitled to bonuses or other fees in accordance with their employment relationship.

34.7. The Person hereby expressly represents that he/she/it has complied with those sections of the City's Code of Ordinances requiring that said Person has **(i)** delivered to the City an affidavit, on a City authored form, stating that the Person and its affiliates have no delinquent taxes or other financial obligations owned to the City; **(ii)** filed the City authored financial disclosure statement form as set forth in the City's Code of Ordinances regarding disclosure of financial interests; **(iii)** delivered to the City a written acknowledgement, on a City authored form, evidencing receipt of a copy of the "Ethics and Conflict of Interest" ordinance for the City of Waterbury and hereby expressly represents that said Person is in full compliance with the entirety of said Code of Ordinances; and **(iv)** filed a current list of all taxable personal and real property as required by the State of Connecticut General Statutes. Any violation of this subsection 34.7 shall be deemed a material breach of this Contract and shall be a violation of the City's Code of Ordinances.

34.8. The definitions set forth in the City's Code of Ordinances shall be the primary source for interpretation of the forgoing subsections 34.1-34.7.

34.9. The Contractor is hereby charged with the requirement that it shall have knowledge of, and shall fully comply with, all relevant provisions of the City's Charter and all relevant provisions of the City's Code of Ordinances, including without limitation Chapters 93, titled "Discriminatory Practices", Chapter 38 titled "Centralized Procurement System", and Chapter 39 titled "Ethics and Conflict of Interest", of said Code as may be amended from time to time.

34.10. The Contractor hereby acknowledges receipt of a copy of the Chapters 38 and 39 of City's Ordinance regarding Procurement, Ethics, and Conflicts of Interest and has familiarized itself with said Code and hereby agrees to adhere to said Code. The text of Chapters 38 and 39 of said Code may be obtained from the Office of the City Clerk of the City and on the internet at the City Clerk's web site: *http://www.waterburyct.org/content/458/539/default.aspx* [click link titled "The City of Waterbury Code of Ordinances *Passed 8/24/2009*". For Chapter 38, click on "TITLE III: ADMINISTRATION", then click on "CHAPTER 38: CENTRALIZED PROCUREMENT SYSTEM". For Chapter 39, click on "TITLE III: ADMINISTRATION", then click on "CHAPTER 39: ETHICS AND CONFLICTS OF INTEREST"].

34.11. The Contractor is hereby charged with the requirement that it shall have knowledge of, and shall fully comply with, the City's Ordinance Sections 34.15 through

34.99 entitled, "Ordinance Concerning the Hiring of Waterbury Residents on Certain Publicly-Funded Construction Projects," and the State of Connecticut Legislature's Special Act No. 01-1.

34.12. Every Person who conducts business with, contracts, with or provides commodities or services to the City, is charged with notice of the extent of the powers and authority, and the limitations thereon, of the Public Officials and Employees of the City, as set forth in the charter of the City, the Code of Ordinances and any Regulations or Policies pertaining thereto. In particular, and without implying any limitation as to its applicability, it applies to all Persons who participate in the procedures pertaining to the Centralized Procurement System as set forth in Chapter 38, and the Ethics and Conflict of Interest provisions set forth in Chapter 39 of the Code of Ordinances.

34.13. INTEREST OF CITY OFFICIALS. No member of the governing body of the City, and no other officer, employee, or agent of the City who exercises any functions or responsibilities in connection with the carrying out of the project, to which this agreement pertains, shall have any personal interest, direct or indirect, in this agreement.

34.14. PROHIBITION AGAINST CONTINGENCY FEES. The Contractor hereby represents that it has not retained anyone to solicit or secure a contract with the City upon an agreement or understanding for a commission, percentage, brokerage or contingency fee.

34.15. FREEDOM OF INFORMATION ACT NOTICE. Pursuant to State statute, in the event the total compensation payable to the Contractor set forth in Section 6 herein is greater than $2,500,000.00, the City is entitled to receive a copy of any and all Contractor records and files related to the performance of this Contract and those records and files are subject to the Freedom of Information Act ("the Act") and may be disclosed by the City pursuant to the Act.

[Signature page follows]

IN WITNESS WHEREOF, the parties hereto execute this Contract on the dates signed below.

WITNESSES:

Sign:_____
Print name:

Sign:_____
Print name:

CITY OF WATERBURY

By:_____
Paul K. Pernerewski, Jr.
Mayor

Date: _____

WITNESSES:

Sign:_____
Print name:

Sign:_____
Print name:

J & J BROTHERS, LLC

By:_____
Print name:
Its _____

Date: _____

ATTACHMENT A

Attachment A shall consist of the following, which are attached hereto, are acknowledged by the Contractor as having been received, or otherwise hereby incorporated by reference as noted below, and all are made a part hereof:

1.1.1 **RFP Number 8890** (acknowledged by the Contractor as having been received and incorporated by reference);

1.1.2 **Addendum #1 to RFP Number 8890**, dated August 25, 2026 and consisting of 8 pages (attached hereto);

1.1.3 Contractor's Proposal, consisting of 21 pages, submitted in response to **RFP Number 8890**, and Contractor's Price Proposal, dated September 1, 2026 and consisting of 3 pages (all attached hereto);

1.1.4 Certificates of Insurance (attached hereto);

1.1.5 Performance Bond and Payment Bond (incorporated by reference);

1.1.6 Special Conditions (Article 1 – Article 22) consisting of 6 pages (attached hereto);

1.1.7 General Conditions (Article 1 – Article 113) consisting of 35 pages (attached hereto);

1.1.8 Technical Specifications, RFP Attachment E, consisting of 5 pages (attached hereto);

1.1.9 Annual Statement of Financial Interests; Disclosure and Affidavit Re: Outstanding Obligations to the City; Debarment Certification; Corporate Resolution, Non-Collusion Affidavit (incorporated by reference);

1.1.10 Any and all amendment(s) and Change Orders issued by the City after execution of Contract (incorporated by reference);

1.1.11 All applicable Federal, State and local statutes, regulations, charter and ordinances (incorporated by reference); and

1.1.12 All permits (including, but not limited to, City of Waterbury Building permit(s)) and licenses (incorporated by reference).

Attachment B-1

"Non-Discrimination Contract Language", dated REV.07012026, attached hereto and incorporated herein.

MAUREEN McCAULEY
ASSISTANT DIRECTOR OF PURCHASING

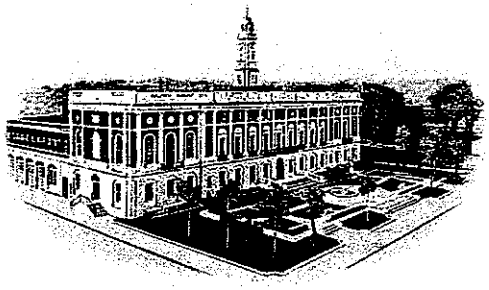

OFFICE OF THE DIRECTOR OF PURCHASING
THE CITY OF WATERBURY
CONNECTICUT

ADDENDUM #1

August 25, 2026

RFP 8890 On-Call Tree Services

Please Be Advised:
1. All Proposers are hereby notified that this Addendum No. 1 shall be part of the Contract Documents for the above referenced **RFP #8890.**
2. This Addendum amends or supplements the RFP Documents. All provisions which are not so amended or supplemented remain in full force and effect.
3. Each Proposer shall be responsible for determining that it has received all Addenda issued and shall acknowledge receipt of all Addenda on the Addendum Acknowledgment Form (see Attachment C). Failure to do so may subject the Proposer to disqualification.

The Contract Documents are hereby amended as follows:

Please refer to the questions and answers below.

Question: Per RFP, "The City of Waterbury is seeking proposals to provide the City various types of tree service including routine tree pruning including ornamental trees, scheduled removal of trees and/or limbs and emergency tree work. Tree work would be within the City of Waterbury property and Rights of Ways and may include Parks, Golf Courses and Public Buildings. Please see Attachment E, Technical Specifications." However, Attachment E is the actual Request for Proposal form. Please advise if there should be an additional document. / Technical Specifications / Attachment E The RFP references Attachment E as containing the Technical Specifications; however, Attachment E in the solicitation package appears to contain the Price Proposal forms. Is there a separate Technical Specifications document that should have been included with the RFP?
Answer: Technical Specifications attached.

Question: If there was a previously awarded contract for this, could you please provide the bid tabulation along with expended amount utilized during that contracted period.
Answer: Not available.

235 GRAND STREET • WATERBURY, CONNECTICUT 06702 • PHONE: (203) 574-6749 • FAX: (203) 597-3437

Question: Prevailing Wage / Pricing Adjustment The RFP establishes fixed regular and emergency hourly rates, while the Contract provides that prevailing wage requirements may apply depending upon the funding and nature of individual work assignments. When a Task Order is subject to a prevailing wage or other mandated wage determination not provided with the RFP, will the Contractor be permitted to adjust its contract rates to account for the applicable wage and fringe requirements?
Answer: No work to be performed under this contract will be for amounts that would require prevailing wages.

Question: Should bidders assume prevailing wage and certified-payroll requirements apply to all work when establishing Attachment E rates? If only certain Task Orders will be subject to prevailing wage, LoCIP, TAR, CHRO or Good Jobs requirements, will the contractor be permitted to adjust rates for those Task Orders to account for the applicable wage and compliance requirements?
Answer: No work to be performed under this contract will be for amounts that would require prevailing wage rates, LoCIP, TAR, CHRO, or Good Jobs Ordinance requirements.

Question: Emergency Response Time The RFP contemplates emergency tree work and 24/7 availability. Is there a required maximum response or mobilization time following notification by the City?
Answer: 2 Hours.

Question: Please define an Emergency Call, required response time, whether a crew must be continuously available/on standby, minimum billable call-out hours, and whether nights, weekends and holidays automatically qualify for Emergency Rates.
Answer: 2 Hour response time. Will not ask companies to be on Standby. Nights, weekends and Holidays qualify for emergency rates.

Question: Work near electrical conductors How will work near electrical conductors be handled? I see no mention of EHAP or MAD in this document.
Answer: It is the vendors responsibility to comply with all safety requirements, including, but not limited to, contracting utilities as needed.

Question: Is there a budget number for these operations that you can share?
Answer: No.

Question:. Please provide the City's historical annual expenditures, crew hours, emergency hours and approximate number of tree removals/pruning assignments for the prior 2-3 years.
Answer:1 year of having On Call Tree Services. Approximately 15 hours of emergency work and approximately 50+ hours of non-emergency work.

Question: How will work be allocated among multiple awardees: rotation, availability, lowest rate, quotation by task, or City discretion?
Answer: City's discretion.

Question: Please define responsibility for traffic control and police details. If police details are required by the City, will those costs be paid directly by the City or reimbursed separately rather than included in the contractor's hourly rates?
Answer: Cost to be paid directly by City.

Question: Please clarify how the City will establish the deadline against which delay damages would be measured, and confirm that any such deadline will be defined and agreed upon within each individual Task Order before work begins.
Answer: Deadline with each task order shall be made and agreed upon by both the City and the vendor prior to work starting.

Question: Please clarify when Performance and Payment Bonds will be required and whether bond premiums may be separately added to a Task Order rather than included in the base hourly rates?
Answer: Jobs over $50,000 require a Performance and Payment Bond. We anticipate no job will reach that threshold.

Thank you.

Maureen McCauley
Assistant Director of Purchasing – City of Waterbury

Attachment F Document

- TECHNICAL SPECIFICATIONS

REQUEST FOR PROPOSAL #8890
BY
THE CITY OF WATERBURY
Public Works Department
On-Call Tree Services

TECHNICAL SPECIFICATIONS

GENERAL REQUIREMENTS:

1. The selected vendor(s) must be a tree expert licensed as an "arborist" by the State of Connecticut (CT General Statutes Sec. 23-61a). The license number must be current and shall be included with the response documents.
2. All work shall be initiated by the Department of Public Works Director or his designee, Tree Warden, or Golf Course Superintendent with the request for a Task Order proposal.
3. A purchase order must be issued in advance to perform any and all work. All work will be inspected by City designated staff and upon their approval the vendor shall issue an invoice.
4. All work to be performed relating to this RFP is on City roads and properties. It will be the vendor's responsibility to maintain traffic control on all roads at all times. Should it become necessary to close off a road or sidewalk completely the vendor must obtain approval through the City of Waterbury Engineering Department. Fees for the application to close a road and/or sidewalk shall be waived.
5. Traffic Control must be provided by the vendor. The Vendor must provide traffic control signage and appropriately garbed flagmen in accordance with the most up to date Manual on Uniform Traffic Control. If police traffic control is required costs will be borne by the Vendor.
6. All pricing relating to this RFP must remain in effect and firm fixed provided in the RFP and through the term of any executed contract.
7. The selected vendor(s) must be on call 24 hours a day, 7 days a week, year round for emergency operations.
8. Response time shall be no greater than two (2) hours after contacted by City of Waterbury Staff.
9. In the event of severe weather, the vendor must make a crew available for emergency tree work. A crew will be defined as: one bucket truck, one chip truck, one chipper, one crew chief, one climber, and at least one ground person. Vendor shall be contacted by City of Waterbury Staff based on local weather forecasts. Severe weather shall include, but not be limited to hurricanes, snow and ice storms, thunderstorms or tornadoes. Any emergency work shall be billed on the hourly rate noted on the bid proposal form for emergency work.
10. The City reserves the right to inspect all equipment of the vendor(s) it is considering to award prior to making awarding the required services.

TREE PRUNING SPECIFICATIONS:

- All work will be billed at an hourly rate for this service.

- Trees must be trimmed to create a well-maintained ornamental appearance whenever possible and must adhere to all American National Standards Institute (ANSI) A300 Standards and practices.
- Maximum tree trimming-crown reduction, pruning top and sides to lighten and balance, removing deadwood and crossed branches. This pruning is to provide for public safety and the general health of the trees. However, at no time should reduction exceed ¼ of the overall size of any tree unless specified by the Director of Public Works, Tree Warden, or Superintendent of Golf Courses. The finished trees shall have a symmetrical and aesthetic form with the weight evenly distributed
- In order to shorten the length of limbs, use the thin to lateral methods. Methods of pruning which may be called Topping, Heading Back, or Lions Tailing shall not be used.
- To lighten end weight where such overburden appears likely to cause breakage of limbs four inches (4") or more in diameter, the only pruning method to be used is drop crotch. Remove cross limbs and epicormics growth (suckers) as required. Pruners will be used to complete final trimming processes. Any exceptions will be at the discretion of the Director of Public Works, Tree Warden or Superintendent of Golf Courses. All trimming will be done in a manner which will not injure or scar the tree.
- Final pruning cuts shall be made without leaving a stub. They shall be made in a manner to favor the earliest covering of the wound by callus growth. This requires that the wound be as small as possible and the cut be reasonably flush outside the branch bark ridge area and that the cambium tissues at the edge of the cut be alive and health. Trees are to be pruned at various locations around Waterbury. This work consists of safety pruning all dead wood and low branches on trees, removing major dead wood, diseased wood, stubs, and any weak leaders that may be considered dangerous.
- The vendor must be able to evaluate tree conditions and hazards and will be responsible to inform the City of any invasive insect species and pests i.e. Asian Long Horned Beetle, Winter Moth or Emerald Ash Borer encountered during any pruning or takedown operation.
- When dead wood trimming, all dead branches one (1") inch in diameter or greater at the trunk must be removed. All trees with branches over a roadway shall be pruned to provide fifteen (15') feet of clearance at the curb. The contractor must have a bucket truck with a minimum working height of 60' (sixty feet) from the bottom of the basket to the ground. The contractor will utilize equipment in good operating condition with adequate suitable equipment to perform the necessary operations. Equipment required may include a limb/brush chipper, a whole tree chipper capable of chipping logs up to 14 inches in diameter, and chip trucks. All equipment must be in good working order when reporting for work, with sharpened blades on all saws. While on an hourly rate no sharpening will be performed during the hours of operation. Vendor must provide sufficient extra sharpened blades. At times when the equipment is non-operable no payment will be made by the City of Waterbury
- It is required that hourly crew work time be verified by the Director of Public Works, Town Tree Warden and/or the Golf Course Superintendent. The

Contractor must insure that these persons are notified that the work is occurring.

- The City shall not pay for un-verified or un-approved crew times.

TREE REMOVAL SPECIFICATIONS

- This work will be billed at an hourly rate. Due to the various considerations that must be taken into account with a tree removal / take down, including variations in overall canopy volume, potential secondary involvement with other trees or methods of removal due to proximity of structures etc.; tree removal (take down) will billed at an hourly rate and will be on a case by case basis.
- The Contractor shall furnish all materials, equipment, tools, supplies, labor and transportation including fuel and power to perform all of the work necessary for the removal of trees designated during the life of the contract. Stumps must be flush cut to the ground. All grass and pavement areas are to be blown clean of all debris with a leaf blower.
- As much as is feasible, tree removal work will be scheduled for an eight (8) hour day between the hours of 7:30 a.m. and 4:00 p.m. The tree removal crew (minimum 3 men) will include a qualified tree man ("crew chief") and at least one member with the ability (and the proper equipment) to climb the trees in order to accomplish the work. The contractor must have a bucket truck with a minimum working height of 60' (sixty feet) from the bottom of the basket to the ground. The contractor will utilize equipment in good operating condition with adequate suitable equipment to perform the necessary operations. Equipment required may include a limb/brush chipper, a whole tree chipper capable of chipping logs up to 14 inches in diameter, and chip trucks. All equipment must be in good working order when reporting for work, with sharpened blades on all saws. While on an hourly rate no sharpening will be performed during the hours of operation. Vendor must provide sufficient extra sharpened blades. At times when the equipment is non-operable no payment will be made by the City.

EMERGENCY CLEARING SERVICES

- This work will be billed at an hourly rate.
- The Contractor will be responsible for the clearing of any tree or tree debris that present road obstructions

as well as all identified aerial hazards over City roadways during and immediately following an inclement or adverse weather events as part of "Make Safe" operations.

- All materials will be cut and put off the curb line in order to re-gain safe passage on public roadways as soon as possible.
- The emergency services crew will include a qualified tree man ("crew chief").
- The City may require the Contractor to provide additional crews when deemed necessary to preserve public safety.

Acknowledged
Cece

MAUREEN McCAULEY
ASSISTANT DIRECTOR OF PURCHASING

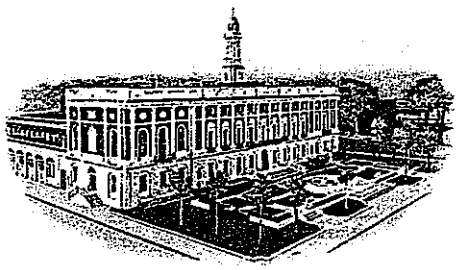

OFFICE OF THE DIRECTOR OF PURCHASING
THE CITY OF WATERBURY
CONNECTICUT

ADDENDUM #1

August 25, 2026

RFP 8890 On-Call Tree Services

Please Be Advised:
1. All Proposers are hereby notified that this Addendum No. 1 shall be part of the Contract Documents for the above referenced **RFP #8890.**
2. This Addendum amends or supplements the RFP Documents. All provisions which are not so amended or supplemented remain in full force and effect.
3. Each Proposer shall be responsible for determining that it has received all Addenda issued and shall acknowledge receipt of all Addenda on the Addendum Acknowledgment Form (see Attachment C). Failure to do so may subject the Proposer to disqualification.

The Contract Documents are hereby amended as follows:

Please refer to the questions and answers below.

Question: Per RFP, "The City of Waterbury is seeking proposals to provide the City various types of tree service including routine tree pruning including ornamental trees, scheduled removal of trees and/or limbs and emergency tree work. Tree work would be within the City of Waterbury property and Rights of Ways and may include Parks, Golf Courses and Public Buildings. Please see Attachment E, Technical Specifications." However, Attachment E is the actual Request for Proposal form. Please advise if there should be an additional document. / Technical Specifications / Attachment E The RFP references Attachment E as containing the Technical Specifications; however, Attachment E in the solicitation package appears to contain the Price Proposal forms. Is there a separate Technical Specifications document that should have been included with the RFP?
Answer: Technical Specifications attached.

Question: If there was a previously awarded contract for this, could you please provide the bid tabulation along with expended amount utilized during that contracted period.
Answer: Not available.

235 GRAND STREET • WATERBURY, CONNECTICUT 06702 • PHONE: (203) 574-6749 • FAX: (203) 597-3437

Question: Prevailing Wage / Pricing Adjustment The RFP establishes fixed regular and emergency hourly rates, while the Contract provides that prevailing wage requirements may apply depending upon the funding and nature of individual work assignments. When a Task Order is subject to a prevailing wage or other mandated wage determination not provided with the RFP, will the Contractor be permitted to adjust its contract rates to account for the applicable wage and fringe requirements?
Answer: No work to be performed under this contract will be for amounts that would require prevailing wages.

Question: Should bidders assume prevailing wage and certified-payroll requirements apply to all work when establishing Attachment E rates? If only certain Task Orders will be subject to prevailing wage, LoCIP, TAR, CHRO or Good Jobs requirements, will the contractor be permitted to adjust rates for those Task Orders to account for the applicable wage and compliance requirements?
Answer: No work to be performed under this contract will be for amounts that would require prevailing wage rates, LoCIP, TAR, CHRO, or Good Jobs Ordinance requirements.

Question: Emergency Response Time The RFP contemplates emergency tree work and 24/7 availability. Is there a required maximum response or mobilization time following notification by the City?
Answer: 2 Hours.

Question: Please define an Emergency Call, required response time, whether a crew must be continuously available/on standby, minimum billable call-out hours, and whether nights, weekends and holidays automatically qualify for Emergency Rates.
Answer: 2 Hour response time. Will not ask companies to be on Standby. Nights, weekends and Holidays qualify for emergency rates.

Question: Work near electrical conductors How will work near electrical conductors be handled? I see no mention of EHAP or MAD in this document.
Answer: It is the vendors responsibility to comply with all safety requirements, including, but not limited to, contracting utilities as needed.

Question: Is there a budget number for these operations that you can share?
Answer: No.

Question:. Please provide the City's historical annual expenditures, crew hours, emergency hours and approximate number of tree removals/pruning assignments for the prior 2-3 years.
Answer:1 year of having On Call Tree Services. Approximately 15 hours of emergency work and approximately 50+ hours of non-emergency work.

Question: How will work be allocated among multiple awardees: rotation, availability, lowest rate, quotation by task, or City discretion?
Answer: City's discretion.

Question: Please define responsibility for traffic control and police details. If police details are required by the City, will those costs be paid directly by the City or reimbursed separately rather than included in the contractor's hourly rates?
Answer: Cost to be paid directly by City.

Question: Please clarify how the City will establish the deadline against which delay damages would be measured, and confirm that any such deadline will be defined and agreed upon within each individual Task Order before work begins.
Answer: Deadline with each task order shall be made and agreed upon by both the City and the vendor prior to work starting.

Question: Please clarify when Performance and Payment Bonds will be required and whether bond premiums may be separately added to a Task Order rather than included in the base hourly rates?
Answer: Jobs over $50,000 require a Performance and Payment Bond. We anticipate no job will reach that threshold.

Thank you.

Maureen McCauley
Assistant Director of Purchasing – City of Waterbury

Attachment F Document

- TECHNICAL SPECIFICATIONS

REQUEST FOR PROPOSAL #8890
BY
THE CITY OFWATERBURY
Public Works Department
On-Call Tree Services

TECHNICAL SPECIFICATIONS

GENERAL REQUIREMENTS:

1. The selected vendor(s) must be a tree expert licensed as an "arborist" by the State of Connecticut (CT General Statutes Sec. 23-61a). The license number must be current and shall be included with the response documents.
2. All work shall be initiated by the Department of Public Works Director or his designee, Tree Warden, or Golf Course Superintendent with the request for a Task Order proposal.
3. A purchase order must be issued in advance to perform any and all work. All work will be inspected by City designated staff and upon their approval the vendor shall issue an invoice.
4. All work to be performed relating to this RFP is on City roads and properties. It will be the vendor's responsibility to maintain traffic control on all roads at all times. Should it become necessary to close off a road or sidewalk completely the vendor must obtain approval through the City of Waterbury Engineering Department. Fees for the application to close a road and/or sidewalk shall be waived.
5. Traffic Control must be provided by the vendor. The Vendor must provide traffic control signage and appropriately garbed flagmen in accordance with the most up to date Manual on Uniform Traffic Control. If police traffic control is required costs will be borne by the Vendor.
6. All pricing relating to this RFP must remain in effect and firm fixed provided in the RFP and through the term of any executed contract.
7. The selected vendor(s) must be on call 24 hours a day, 7 days a week, year round for emergency operations.
8. Response time shall be no greater than two (2) hours after contacted by City of Waterbury Staff.
9. In the event of severe weather, the vendor must make a crew available for emergency tree work. A crew will be defined as: one bucket truck, one chip truck, one chipper, one crew chief, one climber, and at least one ground person. Vendor shall be contacted by City of Waterbury Staff based on local weather forecasts. Severe weather shall include, but not be limited to hurricanes, snow and ice storms, thunderstorms or tornadoes. Any emergency work shall be billed on the hourly rate noted on the bid proposal form for emergency work.
10. The City reserves the right to inspect all equipment of the vendor(s) it is considering to award prior to making awarding the required services.

TREE PRUNING SPECIFICATIONS:

- All work will be billed at an hourly rate for this service.

- Trees must be trimmed to create a well-maintained ornamental appearance whenever possible and must adhere to all American National Standards Institute (ANSI) A300 Standards and practices.
- Maximum tree trimming-crown reduction, pruning top and sides to lighten and balance, removing deadwood and crossed branches. This pruning is to provide for public safety and the general health of the trees. However, at no time should reduction exceed ¼ of the overall size of any tree unless specified by the Director of Public Works, Tree Warden, or Superintendent of Golf Courses. The finished trees shall have a symmetrical and aesthetic form with the weight evenly distributed
- In order to shorten the length of limbs, use the thin to lateral methods. Methods of pruning which may be called Topping, Heading Back, or Lions Tailing shall not be used.
- To lighten end weight where such overburden appears likely to cause breakage of limbs four inches (4") or more in diameter, the only pruning method to be used is drop crotch. Remove cross limbs and epicormics growth (suckers) as required. Pruners will be used to complete final trimming processes. Any exceptions will be at the discretion of the Director of Public Works, Tree Warden or Superintendent of Golf Courses. All trimming will be done in a manner which will not injure or scar the tree.
- Final pruning cuts shall be made without leaving a stub. They shall be made in a manner to favor the earliest covering of the wound by callus growth. This requires that the wound be as small as possible and the cut be reasonably flush outside the branch bark ridge area and that the cambium tissues at the edge of the cut be alive and health. Trees are to be pruned at various locations around Waterbury. This work consists of safety pruning all dead wood and low branches on trees, removing major dead wood, diseased wood, stubs, and any weak leaders that may be considered dangerous.
- The vendor must be able to evaluate tree conditions and hazards and will be responsible to inform the City of any invasive insect species and pests i.e. Asian Long Horned Beetle, Winter Moth or Emerald Ash Borer encountered during any pruning or takedown operation.
- When dead wood trimming, all dead branches one (1") inch in diameter or greater at the trunk must be removed. All trees with branches over a roadway shall be pruned to provide fifteen (15') feet of clearance at the curb. The contractor must have a bucket truck with a minimum working height of 60' (sixty feet) from the bottom of the basket to the ground. The contractor will utilize equipment in good operating condition with adequate suitable equipment to perform the necessary operations. Equipment required may include a limb/brush chipper, a whole tree chipper capable of chipping logs up to 14 inches in diameter, and chip trucks. All equipment must be in good working order when reporting for work, with sharpened blades on all saws. While on an hourly rate no sharpening will be performed during the hours of operation. Vendor must provide sufficient extra sharpened blades. At times when the equipment is non-operable no payment will be made by the City of Waterbury
- It is required that hourly crew work time be verified by the Director of Public Works, Town Tree Warden and/or the Golf Course Superintendent. The

Contractor must insure that these persons are notified that the work is occurring.

- The City shall not pay for un-verified or un-approved crew times.

TREE REMOVAL SPECIFICATIONS

- This work will be billed at an hourly rate. Due to the various considerations that must be taken into account with a tree removal / take down, including variations in overall canopy volume, potential secondary involvement with other trees or methods of removal due to proximity of structures etc.; tree removal (take down) will billed at an hourly rate and will be on a case by case basis.
- The Contractor shall furnish all materials, equipment, tools, supplies, labor and transportation including fuel and power to perform all of the work necessary for the removal of trees designated during the life of the contract. Stumps must be flush cut to the ground. All grass and pavement areas are to be blown clean of all debris with a leaf blower.
- As much as is feasible, tree removal work will be scheduled for an eight (8) hour day between the hours of 7:30 a.m. and 4:00 p.m. The tree removal crew (minimum 3 men) will include a qualified tree man ("crew chief") and at least one member with the ability (and the proper equipment) to climb the trees in order to accomplish the work. The contractor must have a bucket truck with a minimum working height of 60' (sixty feet) from the bottom of the basket to the ground. The contractor will utilize equipment in good operating condition with adequate suitable equipment to perform the necessary operations. Equipment required may include a limb/brush chipper, a whole tree chipper capable of chipping logs up to 14 inches in diameter, and chip trucks. All equipment must be in good working order when reporting for work, with sharpened blades on all saws. While on an hourly rate no sharpening will be performed during the hours of operation. Vendor must provide sufficient extra sharpened blades. At times when the equipment is non-operable no payment will be made by the City.

EMERGENCY CLEARING SERVICES

- This work will be billed at an hourly rate.
- The Contractor will be responsible for the clearing of any tree or tree debris that present road obstructions

as well as all identified aerial hazards over City roadways during and immediately following an inclement or adverse weather events as part of "Make Safe" operations.

- All materials will be cut and put off the curb line in order to re-gain safe passage on public roadways as soon as possible.
- The emergency services crew will include a qualified tree man ("crew chief").
- The City may require the Contractor to provide additional crews when deemed necessary to preserve public safety.



FILL IN AND RETURN WITH YOUR SUBMISSION

CITY OF WATERBURY
ANNUAL STATEMENT OF FINANCIAL INTERESTS (Calendar Year 2026)
Persons or Entities Conducting Business with the City

I. Outstanding Purchase Orders of Contracts with the City

A. Contracts

No Contracts with the City [X]

(Service or Commodity Covered by Contract)

(Term of Contract)

(Service or Commodity Covered by Contract)

(Term of Contract)

(Service or Commodity Covered by Contract)

(Term of Contract)

FILL IN AND RETURN WITH YOUR SUBMISSION

CITY OF WATERBURY
ANNUAL STATEMENT OF FINANCIAL INTERESTS (Calendar Year 202__)
Persons or Entities Conducting Business with the City

B. Purchase Order(s).

No Purchase Order(s) with the City ☒

(Service or Commodity Covered by Purchase Order)

(Date of Purchase Order)

(Service or Commodity Covered by Purchase Order)

(Date of Purchase Order)

(Service or Commodity Covered by Purchase Order)

(Date of Purchase Order)

FILL IN AND RETURN WITH YOUR SUBMISSION

CITY OF WATERBURY
ANNUAL STATEMENT OF FINANCIAL INTERESTS (Calendar Year 202__)
Persons or Entities Conducting Business with the City

II. Financial Interest Disclosure
(Public Officials, Employees or Board and Commission Members with interest in Person or Entity Conducting Business with the City)

No Officials, Employees or Board and Commission Members with Financial Interest [X]

(Name of Official)

(Position with City)

(Nature of Business Interest)
(e.g. Owner, Director etc...)

Interest Held By:
Self [ ] Spouse [ ] Joint [ ] Child [ ]

(Name of Official)

(Position with City)

(Nature of Business Interest)
(e.g. Owner, Director etc...)

Interest Held By:
Self [ ] Spouse [ ] Joint [ ] Child [ ]

FILL IN AND RETURN WITH YOUR SUBMISSION

1. I certify that this Annual Statement of Financial Interests is a complete and accurate statement of those matter required to be disclosed by me pursuant to §39.061 of the Code of Ordinances.

2. I understand that if I fail to file an Annual Statement (or amendment thereto) or an inaccurate Statement I will be in violation with Chapter 39 of the Code of Ordinance and, thereby, subject to the remedies set forth in §§38.71 and 39.101 of said Code.

3. I understand that I must file with the City Clerk, within fifteen (15) days following any reportable occurrence, any amendments to the Annual Statement.

I have read and agree to the above certification.

J&J Brothers, LLC
(Name of Company, if applicable)

Signature of Individual (or Authorized Signatory)

8/31/2026
Date

Cecelia Carabetta Managing Member
Print or Type Name and Title (if applicable)

DELIVERED | By Mail ☐ Hand-Delivered ☒

FILL IN AND RETURN WITH YOUR SUBMISSION

City of Waterbury Certification
Regarding
Debarment, Suspension, Ineligibility and Exclusion

If the transaction is Federally funded, in whole or in part (including pass through grants to state and/or municipal government), this certification is required by the regulations implementing one or more Presidential Executive Orders. If this transaction is funded by the State of Connecticut, in whole or in part, this certification is required in accordance with one or more State of Connecticut general statutes.

1. By signing and submitting the attached proposal and/or this document, the prospective lower tier participant, vendor, or contractor is providing the certification set out below.
2. The certification in this clause is a material representation of fact upon which reliance was placed when this transaction was entered into. If it is later determined that the prospective lower tier participant, vendor, or contractor knowingly rendered an erroneous certification, in addition to other remedies available to the Federal , State, or City government, the department or agency with which this transaction originated may pursue available remedies, including suspension and/or debarment.
3. The prospective lower tier participant, vendor or contractor shall provide immediate written notice to the person to which the attached proposal and/or this document is submitted if at any time the prospective lower tier participant, vendor or contractor learns that its certification was erroneous when submitted or has become erroneous by reason of changed circumstances.
4. The terms "covered transaction", "debarred", "suspended", "ineligible", "lower tier covered transaction", "participant", "person", "primary covered transaction", "principal", "proposal", and "voluntarily excluded", as used herein, have the meanings set out in the Definitions and Coverage sections of rules implementing Executive Order 12549 and/or State of Connecticut statutes and regulations. You may contact the person to which this proposal and/or this document is submitted for assistance in obtaining a copy of the foregoing.
5. The prospective lower tier participant, vendor or contractor agrees by submitting the attached proposal and/or this document that, should the proposed covered transaction be entered into, it shall not knowingly enter into any covered transaction with a person who is debarred, suspended, declared ineligible, or voluntarily excluded from participation in this covered transaction unless authorized by the department or agency with which this transaction originated.
6. The prospective lower tier participant, vendor or contractor further agrees by submitting the attached proposal and/or this document that it will include the clause titled "Certification Regarding Debarment, Suspension, Ineligibility, and Voluntary Exclusion-Lower Tier Covered Transactions", without modification, in all covered transaction and in all solicitations for covered transactions.
7. A participant in a covered transaction may rely upon the certification of a prospective participant in a covered transaction that it is not debarred, suspended, ineligible, or voluntarily excluded from the covered transaction, unless it knows that the certification is erroneous. A participant may decide the method and frequency by which it determines the eligibility of its principals. Each participant may but is not required to, check the Non-procurement List.
8. Nothing contained in the foregoing shall be construed to require establishment of a system of records in order to render in good faith the certification required herein. The knowledge and information of a participant is not required to exceed that which is normally possessed by a prudent person in the ordinary course of business dealings.
9. Except for transactions authorized under paragraph 5 herein, if a participant in a covered transaction knowingly enters into a lower tier covered transaction with a person who is suspended, debarred, ineligible, or voluntarily excluded from participation in this transaction, in addition to other remedies available to the Federal, State or Municipal government, the department or agency with which this transaction originated may pursue available remedies, including suspension and/or debarment.

Certification

(1) The prospective recipient of monies hereby certifies, by submission of its attached proposal and/or by execution of this document, that neither it nor its principles are presently debarred, suspended, proposed for debarment, declared ineligible, disqualified, or voluntarily excluded from bidding or participation in the proposed transaction by any Federal, State, or Municipal department or agency or by the statutes, regulations or ordinances of the foregoing departments and agencies.

(2) Where the prospective recipient of monies is unable to certify to any of the statements in this certification, such prospective participant shall attach a written explanation hereto.

Full Legal Name and address of Recipient, Vendor, or Contractor: J&J Brothers, LLC
200 Pratt St
Meriden, CT 06450

Print Name and Title of Authorized Representative: Cecelia Carabetta Managing Member

Signature of Authorized Representative: Cecelia Carabetta

Date: 8/31/2026

FILL IN AND RETURN WITH YOUR SUBMISSION

CITY OF WATERBURY
DISCLOSURE AND CERTIFICATION AFFIDAVIT REGARDING OUTSTANDING OBLIGATIONS TO THE CITY OF WATERBURY

For the purposes of this Disclosure of Outstanding Financial Obligations, the following definitions apply:

(a) "Contract" means any Public Contract as defined below.

(b) "Person" means one (1) or more individuals, partnerships, corporations, associations, or joint ventures.

(c) "Public Contract" means any agreement or formal commitment entered into by the city to expend funds in return for work, labor, services, supplies, equipment, materials or any combination of the foregoing, or any lease, lease by way of concession, concession agreement, permit, or per agreement whereby the city leases, grants or demises property belonging to the city, or otherwise grants a right of privilege to occupy or to use said property of the city.

(d) "City" means any official agency, board, authority, department office, or other subdivision of the City of Waterbury.

State of Connecticut

SS.: Meriden

County of New Haven

Cecelia Carabetta, being first duly sworn, deposes and says that:

1. I am the ***owner, partner, officer, representative, agent or*** Managing Member of J&J Brothers, LLC (Contractor's Name), the Contractor that has submitted the attached agreement.

2. I am fully informed respecting the preparation and contents of the attached Agreement and of all pertinent circumstances respecting such Agreement;

3. That as a person desiring to contract with the City (check all that apply):

____ The Contractor and each owner, partner, officer, representative, agent or affiliate of the Contractor has filed a list of taxable personal property with the City of Waterbury for the most recent grand list, as required by Conn. Gen. Stat. §12-42.

__X__ Neither the Contractor nor any owner, partner, officer, representative, agent or affiliate of the Contractor are required to file a list of taxable personal property with the City of Waterbury for the most recent grand list, as required by Conn. Gen. Stat. §12-42.

__X__ Neither the Contractor nor any owner, partner, officer, representative, agent or affiliate of the Contractor either directly or through a lease agreement, owes back taxes to the City of Waterbury

FILL IN AND RETURN WITH YOUR SUBMISSION

CITY OF WATERBURY
DISCLOSURE AND CERTIFICATION AFFIDAVIT REGARDING OUTSTANDING OBLIGATIONS TO THE CITY OF WATERBURY

X Neither the Contractor nor any owner, partner, officer, representative, agent or affiliate of the Contractor either directly or through a lease agreement, has any other outstanding obligations to the City of Waterbury

4. The following list is a list of the names of all persons affiliated with the business of the Contractor, if none state none. Use additional sheet if necessary (Must be on company letterhead and notarized):

Name	Title	Affiliated Company (if none state NONE)	Service or Material	DOB
1 Cecelia Carabetta	Managing Member	None		
2 Joseph Carabetta	Member	None		
3 Giovanni Carabetta	Member	None.		
4				

5. That as a person desiring to contract with the City:

(a) The Contractor or an owner, partner, officer, representative, agent or affiliate of the Contractor provides, or has provided, services or materials to the City within one (1) year prior to the date of this disclosure, if none, state none. Use additional sheet if necessary (Must be on company letterhead and notarized):

Name	Title	Affiliated Company (if none state NONE)	Service or Material	DOB
1		None		
2		None		
3		None		
4		None.		

(b) The Contractor possesses an ownership interest in the following business organizations, if none, state none. Use additional sheet if necessary (Must be on company letterhead and notarized) :

Organization Name	Address	Type of Ownership
1	None	
2	None	
3	None	
4	None	

(c) The following persons possess an ownership interest in the Contractor. If the Contractor is a corporation, list all of the officers of the corporation and the names of each stockholder whose shares exceed twenty-five

FILL IN AND RETURN WITH YOUR SUBMISSION

CITY OF WATERBURY
DISCLOSURE AND CERTIFICATION AFFIDAVIT REGARDING OUTSTANDING OBLIGATIONS TO THE CITY OF WATERBURY

(25) percent of the outstanding stock, if none, state none. Use additional sheet if necessary (Must be on company letterhead and notarized):

	Name	Title	DOB	Stock %
1	None			
2	None			
3	None			
4	None			

(d) Of the following of the affiliates, individuals or business entities identified in this affidavit, list each that owns, owned, or within one (1) year prior to the date of this disclosure has owned, taxable property situated in the City of Waterbury, if none state none. Use additional sheet if necessary (Must be on company letterhead and notarized):

	Name	Title	Affiliated Company (if none state NONE)	Address	DOB
1	None				
2	None				
3	None				
4	None				

(e) If the Contractor conducts business under a trade name, the following additional information is required: the place where such entity is incorporated or is registered to conduct such business; and the address of its principal place of business, if none, state none:

	TRADE NAME	PLACE OF INCORPORATION/REGISTRY	PRINCIPAL PLACE OF BUSINESS
1	None		
2	None		
3	None		
4	None		

I hereby certify that the statements set forth above are true and complete, and I understand that any incorrect information or omission of information from this affidavit may result in the immediate termination of the Contractor's agreement with the City of Waterbury.

For Partnership/Sole Proprietor

In presence of:

Witness

J&J Brothers, LLC
Name of Partnership/Business

FILL IN AND RETURN WITH YOUR SUBMISSION

CITY OF WATERBURY
DISCLOSURE AND CERTIFICATION AFFIDAVIT REGARDING OUTSTANDING OBLIGATIONS TO THE CITY OF WATERBURY

By: J&J Brothers, LLC
Name of General Partner/ Sole Proprietor

200 Pratt St Meriden, CT 06450
Address of Business

State of Connecticut)
) SS Meriden
County of New Haven)

Cecelia Carabetta being duly sworn,

Deposes and says that he/she is Managing Member of J&J Brothers and that he/she answers to the foregoing questions and all statements therein are true and correct.

Subscribed and sworn to before me this 09 day of 01 2026

(Notary Public)

Jennifer J Pearson
Notary Public - Connecticut
My Commission Expires
March 31, 2028

My Commission Expires: March 31, 2028

For Corporation

Witness

Name of Corporate Signatory

Address of Business

Affix
Corporate
Seal

By: Name of Authorized Corporate Officer

Its: Title

FILL IN AND RETURN WITH YOUR SUBMISSION

CITY OF WATERBURY
DISCLOSURE AND CERTIFICATION AFFIDAVIT REGARDING OUTSTANDING OBLIGATIONS TO THE CITY OF WATERBURY

State of Connecticut)
) SS Meriden
County of New Haven)

Cecelia Carabetta being duly sworn,

deposes and says that he/she is Managing Member of J&J Brothers and that he/she answers to the foregoing questions and all statements therein are true and correct.

Subscribed and sworn to before me this 09 day of 01 2026.

(Notary Public)

My Commission Expires: March 31, 2028

Jennifer J Pearson
Notary Public - Connecticut
My Commission Expires
March 31, 2028

FILL IN AND RETURN WITH YOUR SUBMISSION

ATTACHMENT C

KEVIN MC CAFFERY
DIRECTOR OF PURCHASING
235 GRAND STREET, ROOM 103
WATERBURY, CT 06702

The undersigned declares that the only persons or parties interested in this Proposal as principals are as stated; that the Proposal is made without any collusion with other persons, firms, or corporations; that Proposer has carefully examined the entire Request for Proposal; that Proposer has informed itself fully in regard to all conditions pertaining to the Work and the place where it is to be performed; and that with this representation, the undersigned makes this Proposal. These prices shall cover all expenses incurred in performing the Work required under the Contract Documents, of which this Proposal and Form are a part.

The undersigned agrees and covenants that the Contract Time shall commence on delivery of the City of Waterbury's written notice to proceed, which shall occur after contract execution by both parties.

The undersigned acknowledges receipt of addenda numbered: (insert date)

1 Cecelia Carabetta 4 9/1/26
2 Giovanni Carabetta 5 9/1/26
3 Joseph Carabetta 6 9/1/26

All Work for this Project shall be performed at the Proposal Prices as described in the Proposal Documents.

The undersigned hereby certifies under the penalties of perjury that this Proposal is in all respects bona fide, fair and made without collusion or fraud with any other person. As used in this section, the work "person" shall mean any natural person, joint venture, partnership, corporation, or other business or legal entity.

82-0663480
Social Security Number
or Federal Identification Number

Cecelia Carabetta
Signature of Individual or Corporate Name
J&J Brothers, LLC

Corporate Officer
(if applicable)

City notice of acceptance should be mailed, telegraphed or delivered to the undersigned Proposer at the following address:

Name Cecelia Carabetta
By: Managing Member
(Title)
Business Address: 200 Pratt St Meriden, CT 06450
(City, State, Zip Code)

Phone: 203-537-7777
Email: Jandjbros11c@gmail.com
Date: 09/01/2026

Note: If the Proposer is a corporation, indicate State of incorporation under signature, and affix corporate seal; if a partnership, give full names and residential addresses, if different from business address.

Attachment E Document

- PRICE PROPOSAL FORM

Attachment E

REQUEST FOR PROPOSAL #8890
BY
The City of Waterbury Public Works Department
On-Call Tree Services

(Must be submitted as part of Proposal in a separate sealed envelope, marked "Confidential: Price Proposal.")

Date: 09/01/2026

Kevin McCaffery
Director of Purchasing
City of Waterbury
235 Grand Street, Room 103
Waterbury, CT 06702

Sir:

Pursuant to and in compliance with your RFP, the Undersigned,

J&J Brothers, LLC
(Print or Type Company/Corporate Name)

200 Pratt St
(Print or Type Business Address)
Meriden, CT 06450

having carefully examined all the RFP Documents, together with all Addenda, as acknowledged on Attachment C, and having informed itself fully in regard to all conditions and related requirements pertaining to the performance of services required under this RFP; and that with this representation, the undersigned makes this Proposal, as follows:

[Proposal continued on following page(s)]

REQUEST FOR PROPOSAL #8890
BY
The City of Waterbury
Public Works Department On-Call Tree Services

Price Proposal

Description of Service	Regular Rate	Emergency Rate
Pruning and Tree Removal (Includes a crew chief, climber & grounds man, 10 cubic yard box truck & chipper and 60' aerial lift	$ 310.00 /hr.	$ 450.00 /hr.
Ground Cleanup (includes a crew chief and a ground man, 10 cubic yard box truck & chipper)	$ 210.00 /hr.	$ 350.00 /hr.

Additional Required Pricing Information: These rates will be used to add to or subtract from "crew rates" where man power is otherwise inconsistent with these specifications

Description of Service	Regular Rate	Emergency Rate
Crew Chief/Bucket Operator	$ 75.00 /hr.	$ 150.00 /hr.
Climber	$ 95.00 /hr.	$ 195.00 /hr.
Grounds Men	$ 55.00 /hr.	$ 80.00 /hr.
Flag Man	$ 50.00 /hr.	$ 75.00 /hr.
EQUIPMENT	Regular Rate	Emergency Rate
Aerial Lift- 70ft w/ working distance	$ 220.00	$ 350.00
Chipper & 10 yard Box Truck	$ 120.00	$ 200.00

REQUEST FOR PROPOSAL #8890
BY
The City of Waterbury
Public Works Department On-Call Tree Services

Price Proposal continued

Whole Tree Chipper- 14" log capacity	$ 150.00	$ 195.00
Stump Grinder	$ 200.00	$ 300.00
Crane	$ 250.00	$ 500.00
Multi loader/articulating loader with grapple and winch	$ 200.00	$ 325.00

82-0663480
Social Security Number
or Federal Identification Number

Cecelia Carabetta
Signature of Individual or
Corporate Name

J&J Brothers LLC
Company Name

Corporate Officer
(if applicable)

By: Cecelia Carabetta Managing Member
(Title)
200 Pratt St
(Business Address)
Meriden, CT, 06450
(City, State, Zip Code)
Email: jandjbrosllc@gmail.com

Date: 9/01/2026

END OF ATTACHMENT E

ACORD

CERTIFICATE OF LIABILITY INSURANCE

DATE (MM/DD/YYYY): 08/31/2026

THIS CERTIFICATE IS ISSUED AS A MATTER OF INFORMATION ONLY AND CONFERS NO RIGHTS UPON THE CERTIFICATE HOLDER. THIS CERTIFICATE DOES NOT AFFIRMATIVELY OR NEGATIVELY AMEND, EXTEND OR ALTER THE COVERAGE AFFORDED BY THE POLICIES BELOW. THIS CERTIFICATE OF INSURANCE DOES NOT CONSTITUTE A CONTRACT BETWEEN THE ISSUING INSURER(S), AUTHORIZED REPRESENTATIVE OR PRODUCER, AND THE CERTIFICATE HOLDER.

IMPORTANT: If the certificate holder is an ADDITIONAL INSURED, the policy(ies) must have ADDITIONAL INSURED provisions or be endorsed. If SUBROGATION IS WAIVED, subject to the terms and conditions of the policy, certain policies may require an endorsement. A statement on this certificate does not confer rights to the certificate holder in lieu of such endorsement(s).

PRODUCER
Corporate Risk Solutions
P.O. Box 823
Southington, CT 06489
License #: 1043303

CONTACT NAME: Mario Ferreri
PHONE (A/C, No, Ext): (860)426-1080 FAX (A/C, No): (860)426-1999
E-MAIL ADDRESS: processingteam@underwritingpros.com

INSURER(S) AFFORDING COVERAGE		NAIC #
INSURER A:	CUMIS Specialty Insurance Company, Inc.	12758
INSURER B:	Progressive Casualty Insurance Company	24260
INSURER C:	MS Transverse Specialty Insurance Company	41807
INSURER D:	StarNet Insurance Company	40045
INSURER E:	Starr Indemnity and Liability Company	38318
INSURER F:	Tokio Marine Specialty Insurance Company	18058

INSURED
J & J BROTHERS LLC
200 PRATT STREET
MERIDEN, CT 06450

COVERAGES CERTIFICATE NUMBER: 00002545-0 REVISION NUMBER: 416

THIS IS TO CERTIFY THAT THE POLICIES OF INSURANCE LISTED BELOW HAVE BEEN ISSUED TO THE INSURED NAMED ABOVE FOR THE POLICY PERIOD INDICATED. NOTWITHSTANDING ANY REQUIREMENT, TERM OR CONDITION OF ANY CONTRACT OR OTHER DOCUMENT WITH RESPECT TO WHICH THIS CERTIFICATE MAY BE ISSUED OR MAY PERTAIN, THE INSURANCE AFFORDED BY THE POLICIES DESCRIBED HEREIN IS SUBJECT TO ALL THE TERMS, EXCLUSIONS AND CONDITIONS OF SUCH POLICIES. *LIMITS SHOWN MAY HAVE BEEN REDUCED BY PAID CLAIMS. LIMITS SHOWN ARE INCLUSIVE OF AMOUNTS REQUESTED BY THE CERTIFICATE HOLDER AND MAY NOT REFLECT POLICY LIMIT AMOUNTS IN EXCESS OF THOSE REQUESTED. *Not Applicable in WY

INSR LTR	TYPE OF INSURANCE	ADDL INSD	SUBR WVD	POLICY NUMBER	POLICY EFF (MM/DD/YYYY)	POLICY EXP (MM/DD/YYYY)	LIMITS	
A	X COMMERCIAL GENERAL LIABILITY CLAIMS-MADE [X] OCCUR GEN'L AGGREGATE LIMIT APPLIES PER: X POLICY [ ] PRO-JECT [ ] LOC OTHER:			027368488A	08/22/2026	08/22/2027	EACH OCCURRENCE DAMAGE TO RENTED PREMISES (Ea occurrence) MED EXP (Any one person) PERSONAL & ADV INJURY GENERAL AGGREGATE PRODUCTS - COMP/OP AGG	$ 1,000,000 $ 100,000 $ 10,000 $ 1,000,000 $ 2,000,000 $ 2,000,000
B	AUTOMOBILE LIABILITY X ANY AUTO OWNED AUTOS ONLY HIRED AUTOS ONLY SCHEDULED AUTOS NON-OWNED AUTOS ONLY			862153431	08/23/2026	08/23/2027	COMBINED SINGLE LIMIT (Ea accident) BODILY INJURY (Per person) BODILY INJURY (Per accident) PROPERTY DAMAGE (Per accident)	$ 1,000,000 $ $ $
C	X UMBRELLA LIAB X OCCUR EXCESS LIAB CLAIMS-MADE DED RETENTION $ 0			EMR-00001313-00	08/22/2026	08/22/2027	EACH OCCURRENCE AGGREGATE	$ 5,000,000 $ 5,000,000
D	WORKERS COMPENSATION AND EMPLOYERS' LIABILITY ANY PROPRIETOR/PARTNER/EXECUTIVE OFFICER/MEMBER EXCLUDED? (Mandatory in NH) Y/N N If yes, describe under DESCRIPTION OF OPERATIONS below	N/A		BNET690712512	08/21/2026	08/21/2027	X PER STATUTE OTH-ER E.L. EACH ACCIDENT E.L. DISEASE - EA EMPLOYEE E.L. DISEASE - POLICY LIMIT	$ 1,000,000 $ 1,000,000 $ 1,000,000
E	Inland Marine			ITN100065511826	08/21/2026	08/21/2027	Inland Marine - Com	$3,575,663
F	Pollution Liability			PPK2724877-000	10/01/2025	10/01/2026	Pollution Liab	1,000,000/2,000,000

DESCRIPTION OF OPERATIONS / LOCATIONS / VEHICLES (ACORD 101, Additional Remarks Schedule, may be attached if more space is required)

CERTIFICATE HOLDER

CANCELLATION

SHOULD ANY OF THE ABOVE DESCRIBED POLICIES BE CANCELLED BEFORE THE EXPIRATION DATE THEREOF, NOTICE WILL BE DELIVERED IN ACCORDANCE WITH THE POLICY PROVISIONS.

AUTHORIZED REPRESENTATIVE

Cynthia Fiore (MJF)

© 1988-2025 ACORD CORPORATION. All rights reserved.
The ACORD name and logo are registered marks of ACORD

SPECIAL CONDITIONS

INDEX TO SPECIAL CONDITIONS

ARTICLE		PAGE
1.	SPECIAL NOTE	SC-1
2.	PERMITS	SC-1
3.	CONSTRUCTION STAKE OUT	SC-1
4.	SITE RESTORATION	SC-1
5.	CITY NOTIFICATION – BACKFILLING	SC-1
6.	PUBLIC USE OF EXISTING PUBLIC FACILITIES	SC-1
7.	ACCESS TO PRIVATE & PUBLIC PROPERTY	SC-1
8.	WINTER SHUTDOWN	SC-2
9.	OWNER CONTROLLED CONTINGENCY ALLOWANCE	SC-2
10.	CHANGES TO THE WORK	SC-2
11.	LAYDOWN AREAS / MATERIAL STORAGE	SC-2
12.	ADDENDUM TO GENERAL CONDITION ARTICLES 11 & 95	SC-3
13.	ADDENDUM TO GENERAL CONDITIONS ARTICLE 1	SC-3
14.	CITY DESIGN STANDARDS, SPECIFICATIONS AND DETAILS	SC-3
15.	ADDENDUM TO GENERAL CONDITIONS ARTICLE 2	SC-3
16.	ADDENDUM TO GENERAL CONDITION ARTICLE 8, 9, 10	SC-3
17.	MOBILIZATION AND DEMOBILIZATION	SC-3
18.	IMPROVEMENT LOCATION AND TOPOGRAPHICAL SURVEY	SC-3
19.	ADDENDUM TO GENERAL CONDITION ARTICLE 93	SC-3
20.	INTENT OF DRAWINGS	SC-3
21.	ADDENDUM TO GENERAL CONDITION ARTICLES 31	SC-3
22.	ADDENDUM TO GENERAL CONDITIONS	SC-4

ARTICLE 1. SPECIAL NOTE

These Special Conditions shall be subject to all requirements of the Contract, amend or supplement the General Conditions, and modify all Contract Documents which follow them numerically, as set forth in Section 1.2 of the Contract. The terms used in these Special Conditions which are defined in the Contract or General Conditions have the meanings assigned to them in said documents. All provisions of the General Conditions which are not so amended or supplemented remain in full force and effect.

This section applies equally and specifically to all contractors supplying labor and/or equipment and/or materials for this Project; and to all of the Contract Documents. All Contract Documents apply to this Section. Where items of the Contract are repeated, it is intended to call particular attention to or qualify them; it is not intended that any other parts of the Contract shall be assumed to be omitted if not repeated herein.

Unless expressly provided for otherwise, and regardless if not expressly stated in each Article herein, the costs associated with all work and/or services required under the Special Conditions shall be considered as included in the overall cost of the Contract items. No separate or additional payment will be made for this work and/or services.

ARTICLE 2. PERMITS

The Contractor shall obtain all applicable Federal, State and local permits and registrations necessary to complete the project at no additional cost to the City. The cost of obtaining and maintaining the permits shall be included in the Contract Amount.

The Contractor shall give all notices and comply with all laws, ordinances, rules and regulations including building and fire safety codes relating to the performance of the Work.

ARTICLE 3. CONSTRUCTION STAKE OUT - NOT USED

ARTICLE 4. SITE RESTORATION

The Contractor will blend the new work into the existing ground surface and replace any adjacent disturbed materials that may have been damaged or irregular do to construction and/or new installations.

ARTICLE 5. CITY NOTIFICATION - BACKFILLING

Before backfilling any excavated area and after an improvement has been installed the contractor shall notify the City when a backfill operation is to occur. A City representative will make one observation for each excavated area.

ARTICLE 6. PUBLIC USE OF EXISTING PUBLIC FACILITIES

The Contractor shall limit his work area to the site of the construction and its immediate vicinity. No equipment or construction activities are allowed on the existing public facilities, such as athletic fields without prior written approval by the City. No equipment or storage is allowed outside of the designated construction area without prior written approval by the City. The number and location(s) of storage containers shall be approved by the City.

ARTICLE 7. ACCESS TO PRIVATE & PUBLIC PROPERTY

Throughout the duration of Construction, the Contractor shall maintain access to all businesses, places of worship, schools and private residences, etc. in the project area. Particular attention is noted for funeral processions, wedding processions, and other similar activities.

Where required by the City, Contractor shall also conduct regular coordination meetings with Residents, Owners and Operators of businesses and other operations to coordinate active work periods.

Contractor shall also provide and place temporary ramps at driveways or other locations where, in the opinion of the City, there is a need to provide safe access until the permanent handwork is completed.

ARTICLE 8. WINTER SHUTDOWN

No 'winter shutdown' will be permitted for this Project.

Any 'winter shutdown' authorized under this Article shall not change the "Contract Time" for the project. Any extension of the Contract Time must be by formal amendment to the Contract in accordance with the provisions of the Procurement Ordinance of the City of Waterbury.

ARTICLE 9. OWNER CONTROLLED CONTINGENCY ALLOWANCE

If an Owner Controlled Contingency Allowance ("OCCA") has been provided in the Contract, it is to provide an account for certain expenditures found necessary by and ordered done by the City. This item shall include any unforeseen work made necessary by changes in the plans or necessitated by site conditions. Work for which payment is included under other items shall not be considered for inclusion under this item.

Use of the OCCA requires the City's advance written authorization. Determination of amounts to be paid for work under this item shall be in accordance with Article 10 of the Special Conditions and at the sole discretion of the City.

Determination of amounts to be paid for work under this Article shall be agreed to in advance by the Contractor and City and shall not exceed amounts established in the OCCA. At project closeout, unused amounts remaining in the allowance shall be credited to the City by Final Change Order (as part of and so documented in Contractor's final payment request).

In no instance shall payments made pursuant to this Article result in an increase in the amount of the Contract Total Compensation or extension of Contract Time. Any increase above the Contract Total Compensation or Contract Time resulting from utilization of this Article must be by a duly authorized and executed Contract amendment in accordance with Section 27 of the Contract.

ARTICLE 10. CHANGES TO THE WORK

If the City authorizes changes to the work, the following shall apply:

The cost for changes to the work shall be either on a firm proposal agreed to by the City or based on a cost-plus-fee basis agreeable to the City. In the event the work is to be performed on a cost plus basis, the Contractor will perform, or cause to be performed by his subcontractors, such work at direct cost, plus the percentages set out below:

1. For work performed by the Contractor's own forces, direct cost plus Ten Percent (10 %).
2. For work performed by a subcontractor, the cost to the City shall be subcontractor cost to the Contractor, plus 5 %.

ARTICLE 11. LAYDOWN AREAS / MATERIAL STORAGE

A Laydown Area shall not impede traffic flow within the City streets. The Contractor may use these areas during construction and shall be required to restore any disturbed areas to a condition as good as or better than existing conditions.

Contractor shall also be required to clean up, restore, and make safe and usable all Laydown Areas as directed by the Engineer. This may include removing equipment, materials, tools, etc., from the any Laydown Area for a period to be determined by the City of Waterbury.

The City will not provide any staging area for Construction and/or Contractor operations. The Contractor shall provide its own staging/storage area. Lay down areas within the project's limits are allowed but require pre-approval from the City. In all cases, the Contractor shall be responsible for the protection of all materials, tools, etc. Materials received on site which are not immediately installed shall be carefully and securely stored. All materials used throughout work shall be neatly stacked so as not to obstruct the progress of the work or endanger the public, adjacent property owners and tenants or the City.

The Contractor shall provide its own storage facilities and in all cases be responsible for the protection of all materials, tools, etc. The number and location(s) of storage containers shall be approved by the City. Materials received on site which are not immediately installed shall be carefully and securely stored. All materials used throughout work shall be neatly stacked so as not to obstruct the progress of the work or endanger the public or the City or City's employees or tenants. All deliveries of material, equipment, etc., shall be made to the Contractor and accepted only by him/her and only during working hours. City personnel will not receive or accept any materials or equipment, etc. at any time.

ARTICLE 12. ADDENDUM TO GENERAL CONDITIONS 11 and 95
Reference is made to General Condition Articles 11 – Temporary Utilities, and 95 – Temporary Water Supply. The Contractor shall be responsible for determining and supplying at no cost to the City all temporary utilities needed to maintain utility service to all adjacent property owners/tenants.

ARTICLE 13. ADDENDUM TO GENERAL CONDITIONS ARTICLE 1 – NOT USED

ARTICLE 14. CITY DESIGN STANDARDS, SPECIFICATIONS AND DETAILS – NOT USED

ARTICLE 15. ADDENDUM TO GENERAL CONDITIONS ARTICLE 2 – NOT USED

ARTICLE 16. ADDENDUM TO GENERAL CONDITIONS 8, 9 and 10
Reference is made to General Condition Article 8 – Sedimentation and Erosion Control, Article 9 – Protection of Environmental Resources and Article 10 - Environmental Protection Plan. The requirements of Articles 8, 9 and 10 shall not apply to this project; however, the Contractor shall responsible for any such requirements to the extent set forth in the Technical Specifications or elsewhere in the Contract Documents.

ARTICLE 17. MOBILIZATION AND DEMOBILIZATION
The costs of Mobilization and Demobilization for the project shall be included in the contract bid amount. No separate payment shall be made for Mobilization and/or Demobilization.

ARTICLE 18. IMPROVEMENT LOCATION AND TOPOGRAPHICAL SURVEY
Completion of an Improvement Location Survey is <u>not</u> required for this Project.

ARTICLE 19. ADDENDUM TO GENERAL CONDITIONS 93
In lieu of the daily reports required in Article 93 of the general conditions, the contractor shall provide said reports as provided in any issued applicable Task Orders.

ARTICLE 20. INTENT OF DRAWINGS - NOT USED

ARTICLE 21. ADDENDUM TO GENERAL CONDITION 31
Reference is made to General Condition Article 31 – Use of Premises and Removal of Debris. During the progress of the work, the Contractor shall keep the construction areas in a neat condition, free from accumulations of waste materials and rubbish. Lunch papers, bottles, lumber cut-offs, drinking cups and like rubbish shall be removed from the site daily. No alcoholic beverages will be permitted at the construction site(s).

On or before the completion of the work and before acceptance and final payment shall be made, the Contractor shall clean and remove, from the site and adjacent property all surplus and discarded materials, rubbish, and temporary structures and restore, in an acceptable manner, all property and leave the whole area in a neat and presentable condition.

ARTICLE 22. ADDENDUM TO GENERAL CONDITIONS
The following General Conditions Articles are not applicable to this RFP8388:

General Conditions Articles 1-4, 10, 15-17, 36, 44, 46-47, 53-54, 76-78, 84, 90, 94, 102, 105, 108, 109, and 113.

END OF SECTION

RFP # 8890

GENERAL CONDITIONS

INDEX TO GENERAL CONDITIONS

ARTICLE	TITLE	PAGE
1.	PLANS AND SPECIFICATIONS AT THE SITE	GC-1
2.	CONSTRUCTION PROGRESS SCHEDULE	GC-1
3.	ESTIMATED QUANTITIES	GC-2
4.	SCHEDULE OF VALUES; APPLICATION FOR PAYMENT	GC-2
5.	PARTIAL PAYMENTS	GC-2
6.	INSPECTION AND TESTS	GC-3
7.	UTILITIES	GC-3
8.	SEDIMENTATION AND EROSION CONTROL	GC-3
9.	PROTECTION OF ENVIRONMENTAL RESOURCES	GC-4
10.	ENVIRONMENTAL PROTECTION PLAN	GC-5
11.	TEMPORARY UTILITIES	GC-5
12.	ABBREVIATIONS	GC-5
13.	SUBSURFACE EXPLORATION	GC-7
14.	CONTRACT AND CONTRACT DOCUMENTS	GC-7
15.	SHOP DRAWINGS, CATALOG CUTS AND SAMPLES	GC-7
16.	CONTRACTOR'S TITLE TO MATERIALS	GC-8
17.	"OR EQUAL" CLAUSES	GC-8
18.	REPRESENTATIONS OF THE CONTRACTOR	GC-8
19.	PROTECTION OF WORK AND PROPERTY (EMERGENCY)	GC-9
20.	WEATHER CONDITIONS	GC-9
21.	SUBLETTING	GC-9
22.	SUBSTITUTE BOND	GC-10
23.	RIGHT TO WITHHOLD PAYMENTS	GC-10
24.	PAYMENTS BY CONTRACTOR	GC-10
25.	NOTICE OF WARNING	GC-10
26.	PROGRESS MEETINGS.	GC-10
27.	PERMITS	GC-10
28.	RIGHT TO USE THE WORK	GC-11
29.	PROVISIONS REQUIRED BY LAW	GC-11
30.	WAIVER	GC-11
31.	USE OF PREMISES AND REMOVAL OF DEBRIS	GC-11
32.	RIGHT OF WAY AND SUSPENSION OF WORK	GC-11
33.	CONSTRUCTION EQUIPMENT AND MACHINERY	GC-12

INDEX TO GENERAL CONDITIONS

ARTICLE	TITLE	PAGE
34.	GENERAL GUARANTEE	GC-12
35.	PROCEDURE IN CONSTRUCTION	GC-13
36.	APPRENTICES	GC-13
37.	CONTROL OF WORK	GC-13
38.	CITY'S CONTROL NOT LIMITED	GC-13
39.	AUTHORITY AND DUTIES OF INSPECTORS	GC-13
40.	INSPECTION AND CORRECTION OF WORK	GC-14
41.	CONTRACTOR'S OBLIGATIONS	GC-14
42.	TOILET ACCOMMODATIONS AND DRINKING WATER	GC-15
43.	SAFETY AND HEALTH REGULATIONS	GC-15
44.	OWNERSHIP OF DRAWINGS AND SPECIFICATIONS	GC-15
45.	RESIDENTS' PREFERENCE IN WORK ON OTHER PUBLIC FACILITIES	GC-15
46.	LISTING OF EMPLOYMENT OPENINGS	GC-15
47.	SERVICE OF PROCESS	GC-16
48.	CITY OF WATERBURY ORDINANCE CHAPTER 34	GC-16
49.	WAGE RATES	GC-16
50.	SCHEDULE AND POSTING OF MINIMUM WAGE RATES	GC-16
51.	COMPUTATION OF WAGES AND OVERTIME COMPENSATION	GC-17
52.	WAGE UNDERPAYMENTS AND ADJUSTMENTS	GC-17
53.	CONFORMANCE OF WORK	GC-17
54.	DIMENSIONS AND SCHEDULES	GC-17
55.	PROTECTION FROM STORM	GC-17
56.	PROTECTION OF WORK AND MATERIALS	GC-17
57.	FURTHER SAFEGUARDS	GC-17
58.	FIRST AID TO INJURED	GC-18
59.	CONFORMANCE WITH DIRECTIONS	GC-18
60.	COMPETENT HELP TO BE EMPLOYED	GC-18
61.	STREETS AND SIDEWALKS TO BE KEPT OPEN	GC-18
62.	LIGHTS, BARRIERS, FENCES, WATCHMEN & INDEMNITY	GC-18
63.	WORK OUTSIDE REGULAR HOURS	GC-19
64.	BUS LINE INTERFERENCE	GC-19
65.	COLD WEATHER WORK	GC-19
66.	BLASTING AND EXPLOSIVES	GC-19

INDEX TO GENERAL CONDITIONS

ARTICLE	TITLE	PAGE
67.	TUNNELING	GC-20
68.	RESERVED MATERIALS/EXCAVATED MATERIALS	GC-20
69.	OBSTRUCTIONS AND CROSSOVERS	GC-20
70.	DIRECTIONAL SIGNS AND LIGHTS	GC-21
71.	MAINTENANCE OF WORKPLACE	GC-21
72.	OPERATIONS AT SEVERAL POINTS	GC-21
73.	INTERFERENCE WITH EXISTING STRUCTURES	GC-21
74.	TURF, TOPSOIL AND OTHER REPLACEMENT ITEMS	GC-21
75.	MATERIALS	GC-21
76.	DEFECTIVE MATERIALS	GC-22
77.	INSPECTION AND TESTING OF FURNISHED MATERIALS.	GC-22
78.	SAMPLES AND ORDERING LISTS	GC-22
79.	SANITARY CONVENIENCES	GC-22
80.	FINISHING AND CLEANING UP	GC-22
81.	RIGHTS OF ACCESS	GC-23
82.	WORK BY OTHERS	GC-23
83.	WORK WITHIN THE LIMITS OF PRIVATE PROPERTY	GC-23
84.	LOADING	GC-24
85.	COMPLETION OF WORK	GC-24
86.	DUST AND SPILLAGE CONTROL	GC-24
87.	CARE OF THE WORK	GC-24
88.	EMERGENCY WORK	GC-24
89.	FIRE PREVENTION AND PROTECTION	GC-25
90.	PLANIMETER	GC-25
91.	SUPERINTENDENCE	GC-25
92.	CONTRACT ADMINISTRATION COSTS - OUTSIDE REGULAR HOURS	GC-25
93.	DAILY REPORTS	GC-25
94.	MATERIAL AND WORKMANSHIP	GC-25
95.	TEMPORARY WATER SUPPLY	GC-26
96.	FITTING AND COORDINATION OF WORK	GC-26
97.	ARCHEOLOGICAL FINDS	GC-26
98.	EXCAVATIONS NEAR UNDERGROUND UTILITIES	GC-26
99.	WATER QUALITY OF WELLS.	GC-27

INDEX TO GENERAL CONDITIONS

ARTICLE	TITLE	PAGE
100.	WORK IN STATE HIGHWAYS	GC-27
101.	EXISTING INSPECTION REPORTS	GC-27
102.	TEST REPORTS; CERTIFICATES OF COMPLIANCE AND SHIPPING LISTS	GC-27
103.	CLEANING FINISHED WORK	GC-27
104.	COMPLIANCE TO ACTS AND EXECUTIVE ORDERS	GC-28
105.	SEMI-FINAL INSPECTION / SUBSTANTIAL COMPLETION	GC-28
106.	CITY'S CERTIFICATE OF SUBSTANCIAL COMPLETION	GC-28
107.	LIMITED ACCEPTANCE OF WORK	GC-29
108.	FINAL INSPECTION	GC-29
109.	FINAL CHANGE ORDER	GC-29
110.	FINAL PAYMENT APPLICATION	GC-30
111.	FINAL COMPLETION/ CITY'S CERTIFICATE OF FINAL COMPLETION / NOTICE OF PROJECT ACCEPTANCE	GC-30
112.	ACCEPTANCE OF FINAL PAYMENT	GC-30
113.	10-HOUR OSHA CONSTRUCTION SAFETY AND HEALTH COURSE	GC-30

GENERAL CONDITIONS

INTRODUCTORY NOTE:

These General Conditions supplement the provisions and requirements of Contract and modify all Contract Documents which follow it numerically, as set forth in Section 1.2 of the Contract. The General Conditions may be amended, revised or supplemented by the Special Conditions which are project specific. The Contractor's attention is directed to the attached Special Conditions for any amendments, revisions or supplements to the General Conditions for this project. The terms used in these General Conditions which are defined in the Contract have the meanings assigned to them in said Contract.

This section applies equally and specifically to all contractors supplying labor and/or equipment and/or materials for this Project and all drawings, specifications and general provisions of the Contract apply to these General Conditions. Where items of the Contract are repeated, it is intended to call particular attention to or qualify them; it is not intended that any other parts of the Contract shall be assumed to be omitted if not repeated herein.

Unless expressly provided for otherwise in the Contract Documents, all costs associated with any work/services required or necessary under the General Conditions shall be considered as included in the Contract Amount (also referred to as Total Compensation). No separate or additional payment will be made for this work and/or services.

ARTICLE 1. PLANS AND SPECIFICATIONS AT THE SITE / AS-BUILT DRAWINGS

1.01 The Contractor shall maintain at the Project site two (2) copies of all Plans, Specifications, Addenda, approved Shop Drawings, Change Orders and other Modifications, Schedules and Instructions, in good order. One copy is to be marked to record all changes made during construction. These shall be available at all times to the Project Engineer and the City or their authorized representatives. At the conclusion of construction, the Contractor is to turn one (1) corrected set of all documents over to the Project Engineer.

ARTICLE 2. CONSTRUCTION PROGRESS SCHEDULE

2.01 Within seven (7) consecutive calendar days of the written Notice to Proceed, and prior to commencement of any work on site, the Contractor shall prepare and submit for the approval of the City three (3) copies of a complete Construction Progress Schedule which shall be comprised of a critical path method network. (At the same time, the Contractor shall submit the Schedule of Values, Sedimentation and Erosion Control Measures, Water Control Plan and Environmental Protection Plan, as outlined in the various Articles of these General Conditions).

2.02 The critical path of the Project must be identified on the Construction Progress Schedule which shall provide a workable plan for monitoring the progress of all the elements of the Project, establish and clearly display the critical elements of the Work, on which each part or division of the Work is expected to be started and completed, forecast completion of the elements of the Project, and match the Contract duration in time. The Construction Progress Schedule shall also indicate the logic of the work for the major elements and components of work under the Contract, such as the planned mobilization of plant and equipment, sequences of operations, procurement of materials and equipment, duration of activities, type of relationship, lag time (if any), and such other information as it is necessary to present a clear statement of the intended activities.

2.03 The schedule shall indicate all subcontractors to be utilized on the Contract and the portions of the Contract that they will be performing. The Contractor shall evaluate the status of the Project at least monthly, comparing it to the original schedule, which shall be revised as required. The Contractor shall notify the Project Engineer immediately of any circumstances that may affect the current schedule.

2.04 The Contractor shall perform the work of this Contract to satisfy the Construction Progress Schedule as approved by the Project Engineer. However, the Project Engineer and City reserve the right to amend and alter the Construction Progress Schedule, as approved, at any time and in a manner which the Engineer deems to be in the best interests of the City.

2.05 The Contractor shall be required to execute his work in accordance with the Construction Progress Schedule as prepared and in accordance with any additional requirements specified herein and approved by the Project Engineer.

The Construction Progress Schedule shall forecast the times for doing each portion of the work. The Contractor shall arrange the work under this Contract to conform with the Construction Progress Schedule, as it may be revised by the Engineer from time to time, at no additional expense to the City.

2.06 The revised Construction Project Schedule shall take some or all of the following actions to demonstrate the manner in which an acceptable rate of progress will be regained, by the following methods:

i. Increase construction manpower in such quantities and crafts as shall substantially eliminate the backlog of work and meet the current Contract completion date.
ii. Increase the number of working hours per shift, the number of shifts per day, the number of work days per week, or the amount of construction equipment, or any combination of the foregoing
iii. Reschedule work items to achieve concurrent accomplishment of work activities.

2.07 Under no circumstances will the adding of equipment or construction forces, increasing the working hours, or employing any other method, manner, or procedure to return to the contractually required completion dates be a justification for additional compensation to the Contractor.

ARTICLE 3. ESTIMATED QUANTITIES

3.01 Any Estimated Quantities for the Project furnished by the City, including those provided on the Bid/Proposal Form, are approximate only and are: a) for procurement related comparison purposes only, b) given as a basis for the pricing and c) are not represented to be actual quantities for completion of the Work. Within the limits of available funds, the Contractor will be required to complete the Work at the unit prices provided in the Bid Form/or Price Proposal whether it involves quantities greater or lesser than the estimate. The Contractor will be compensated only for the actual quantity of authorized, and actually performed, and/or materials furnished.

ARTICLE 4. SCHEDULE OF VALUES; APPLICATION FOR PAYMENT

4.01 Within seven (7) consecutive calendar days after the Notice to Proceed, as a basis for estimating partial payments, the Contractor shall submit for the approval of the City a certified Schedule of Values, broken down into quantities and unit costs for the various parts of the work, divided as may be directed and aggregating the total sum of the Contract; and if required, he shall submit evidence supporting this schedule.

4.02 The Contractor's requisition for payment shall be submitted on forms supplied by the Contractor and approved by the City and shall be in such numbers of copies as may be designated by the City. Sample forms are included in the ITB/RFP Documents. Alternate payment application forms may be utilized provided they are approved by the City, in writing, prior to submission by the Contractor.

4.03 If the Project is funded by multiple funding sources, the Contractor may be required to submit separate requisitions for payment to each source, on the forms provided by each source and in accord with all requirements of each individual funding source.

4.04 For Lump Sum projects, the requirements for the Schedule of Values are further defined as follows: a) the Schedule of Values shall delineate the various tasks that comprise the lump sum items. Each item in the Schedule of Values shall include its proper share of overhead and profit. This schedule, when accepted by Project Engineer, shall only be used as a basis for Contractor's periodic payment applications. No payment will be made to Contractor until such Schedule has been submitted and accepted by Project Engineer, and b) the lump sum item shall be broken down sufficiently to provide a convenient and realistic means for determining the amount of work done during various stages of progress.

ARTICLE 5. PARTIAL PAYMENTS

5.01 The City will review the Contractor's monthly requisitions for Partial Payments to arrive at what is, in its opinion, a fair and just estimate of the materials suitably stored on the site and the amount of work performed on the Contract. At its discretion, the City may allow to be included in the monthly requisitions materials stored off the site. In the event the City allows the Contractor to include in its requisitions payments for materials stored off the site, the Contractor shall also submit any additional bonds and/or insurance certificates relating to off-site stored material, and follow such other procedures as may be required by the City.

5.02 In making such Partial Payments for the Project, retainage shall be held in the amount of 5% of the value of work completed to date. The Retainage does not include additional sums that the City may withhold due to the Contractors failure to comply with construction plans, specifications etc. deemed provisions of this contract.

5.03 Where prices are not broken down sufficiently in the Schedule of Values to accurately determine the value of work completed, Project Engineer will estimate the value of work completed and will deduct some amount so as to arrive at a conservative value which will allow City to easily complete the Work with the unpaid balance. When the required detail in the Schedule of Values is not provided by Contractor, Contractor agrees to accept Project Engineer's determinations.

ARTICLE 6. INSPECTION AND TESTS

6.01 All material and workmanship shall be subject to inspection, examination and testing by the City and/or Project Engineer (in addition to that required by the Specifications) any and all times during manufacture and/or construction and at any and all places where such manufacture and/or construction is carried on. Notice of the time of all tests to be made at the site shall be given to all interested parties.

6.02 Contractor must obtain the Engineer's approval of any sources of materials to be incorporated into the Project before beginning to use them for the Project.

6.03 If, at any time before issuance of a Notice of Project Acceptance by the City, the City and/or Project Engineer considers it necessary or advisable to examine any portion of the Project already completed by removing or testing out the same, the Contractor shall upon request furnish promptly all necessary facilities, labor and materials. If such work is found to be defective in any material respect because of a fault of the Contractor or any of its subcontractors, or if any work shall have been covered over without the approval or consent of the City (whether or not it is found to be defective), the Contractor shall be liable for testing costs and all costs of correction, including labor, material, services of required consultants, additional supervision and administrative costs.

6.04 For Projects that include material testing to ensure compliance with the Technical Specifications, the Contractor, unless expressly provided for otherwise in the Contract Documents, shall be responsible for all testing as required in the relevant sections of the Technical Specifications.

6.05 Without additional charge, the Contractor shall promptly furnish all reasonable facilities, labor and materials necessary to make tests safe and convenient. Special, full size and performance tests shall be as described in the Specifications.

ARTICLE 7. UTILITIES

7.01 The accuracy and completeness of the utility information shown on the Plans and/or otherwise provided by the City is not guaranteed. The Contractor shall make its own investigation of the extent and location of utilities and of the possibility of relocation work by the utility companies, and shall plan its operations accordingly. No claim for any delays, damage or extra work occasioned thereby will be allowed.

7.02 The Contractor shall allow others access to the Project for the purpose of placing, relocating or maintaining utilities, and he shall cooperate in every way in the performance of this Project.

7.03 The Contractor shall notify the utility owners well in advance of the time the Contractor proposes to perform any work which would endanger utility installations, and the Contractor shall cooperate with the utility owners in relocating and/or protecting such installations during construction operations.

7.04 No payment will be made to the Contractor for locating, protecting and making arrangements for relocating public utilities or for any delays caused thereby. The Contractor shall include all costs of this Project in other scheduled items of the Contract.

ARTICLE 8. SEDIMENTATION AND EROSION CONTROL

8.01 All watercourses shall be protected from sedimentation, both during and after construction. The Contractor shall

control erosion and sedimentation problems in accordance with Connecticut Guidelines for Soil Erosion and Sediment Control prepared by the Connecticut Council on Soil and Water Conservation, dated 2002, as amended.

8.02 The Contractor shall submit the Sedimentation and Erosion Control Plan for the approval of the Project Engineer within seven (7) consecutive calendar days after the Notice to Proceed.

8.03 The Contractor shall be responsible for providing silt fences, staked haybales and other temporary erosion control measures which may be required to properly complete this Project. No extra compensation will be allowed, due to water or precipitation levels fluctuation.

ARTICLE 9. PROTECTION OF ENVIRONMENTAL RESOURCES

9.01 The environmental resources within the Project boundaries and those affected outside the limits of permanent work under this Contract shall be protected during the entire period of this Contract. The Contractor shall confine its activities to areas defined by the Plans and Specifications. Environmental protection shall be as stated in the following subparagraphs:

A. Prior to the beginning of any construction, the Contractor shall identify all land resources to be preserved within the work area. The Contractor shall not remove, cut, deface, injure or destroy land resources including trees, shrubs, vines, grasses, top soil and land forms without special written permission from the property owner. No ropes, cables or guys shall be fastened or attached to any trees for anchorage unless specifically authorized in writing by the Project Engineer. Where such special emergency use is permitted, the Contractor shall provide effective protection for land and vegetation resources at all times as defined in the following subparagraphs.

B. Prior to any construction, the Contractor shall mark the areas that are not required to accomplish all work to be performed under the Contract. Isolated areas within the general work area which are to be saved and protected shall also be marked or fenced. Monuments and markers shall be protected before construction operations commence. Where construction operations are to be conducted during darkness, the markers shall be visible. The Contractor shall convey to its personnel the purpose of marking and/or protection of all necessary objects.

C. Trees, shrubs, vines, grasses, land forms and other landscape features indicated and defined on the Plans to be preserved shall be clearly identified by marking, fencing or wrapping with boards, or any other approved techniques.

D. Earthwork brought to final grade shall be finished as indicated and specified. Side slopes and back slopes shall be protected as soon as practicable upon completion of rough grading. All earth work shall be planned and conducted to minimize the duration of exposure of unprotected soils. Except in instances where the constructed feature obscures borrow areas, quarries and waste material areas, these areas shall not initially be cleared in total. Clearing of such areas shall progress in reasonably sized increments as needed to use the areas developed as approved by the City and/or Project Engineer.

E. Runoff from the construction site shall be controlled by the construction of diversion ditches, benches and berms to retard and divert runoff to protected drainage courses, and any measures required by area wide plans approved under Paragraph 208 of the Clean Water Act, as amended.

F. The Contractor shall construct or install all temporary erosion control features as indicated in the submitted Sedimentation and Erosion Control Plans, or directed by the City and/or Project Engineer. Temporary erosion control measures such as berms, dikes, drains, grassing and mulching shall be maintained until construction of the Project is completed.

G. The Contractor's field offices, staging areas, stockpile storage and temporary buildings shall be placed in areas designated on the submitted Plan. Temporary movement or relocation of the Contractor's facilities shall be made only on approval by the City and/or Project Engineer.

H. Borrow areas shall be managed to minimize erosion and to prevent sediment from entering nearby watercourses.

I. Spoil areas shall be managed and controlled to limit spoil areas and to prevent erosion of soil or sediment from entering nearby watercourses. Spoil areas shall be developed in accordance with the grading plan indicated on the Plans.

ARTICLE 10. ENVIRONMENTAL PROTECTION PLAN

10.01 Within seven (7) consecutive calendar days after the Notice to Proceed, and prior to commencement of any work on site, the Contractor shall submit an Environmental Protection Plan for the approval of the City in accordance with the provisions herein specified. The plan shall include but not be limited to the following:

A. A list of Federal, State and Local laws and regulations concerning environmental protection, pollution control and abatement that are applicable to the Contractor's proposed operations and the requirements imposed by those laws and regulations.

B. Methods for protection of features to be preserved within authorized work areas. The Contractor shall prepare a listing of methods to protect resources needing protection, i.e., trees, shrubs, vines, grasses and groundcover, landscape features, air and water quality, fish and wildlife, soil, historical, archeological and cultural resources.

C. Procedures to be implemented by the Contractor to provide the required environmental protection and to comply with applicable laws and regulations. The Contractor shall set out the procedures to be followed to correct pollution of the environment due to accident, natural causes or failure to follow the procedures set out in accordance with the Environmental Protection Plan.

D. The location of the nearest suitable solid waste disposal area and a permit allowing the Contractor to use those facilities.

E. Drawing showing locations of any proposed temporary excavations or embankments for haul roads, stream crossings, material storage areas, structures, sanitary facilities, and stockpiles of excess' or spoil materials.

F. Environmental monitoring plans for the job site, including land, water, air and noise monitoring as necessary, and as required by the Project Engineer.

G. Environmental monitoring and management plans for the any endangered wildlife or plant species as determined by CT DEEP, City or Project Engineer.

H. Traffic control plan when necessary.

I. Methods of protecting surface and ground water during construction activities.

J. Work area plan showing the proposed activity in each portion of the area and identifying the areas of limited use or nonuse. The plan should include measures for marking the limits of use areas.

ARTICLE 11. TEMPORARY UTILITIES

11.01 Unless expressly otherwise provided for in the Contract Documents the Contractor shall be responsible for determining and supplying at no cost to the City all temporary utilities of any nature whatsoever needed to complete the work. Unless otherwise provided for in the ITB/RFP Documents, all necessary temporary utilities shall be installed at the start of the Project.

ARTICLE 12. ABBREVIATIONS

12.01 Where one of the following abbreviations are used in the Contract Documents, it shall have the meaning set forth opposite each below:

AASHTO	American Association of State Highway and Transportation Officials
ACI	American Concrete Institute

AGA	American Gas Association
AIEE	American Institute of Electrical Project Engineers
AISC	American Institute of Steel Construction
API	American Petroleum Institute
ANSI	American National Standards Institute
ASCE	American Society of Civil Engineers
ASHRAE	American Society of Heating, Refrigeration and Air Conditioning Engineers
ASME	American Society of Mechanical Engineers
ASTM	American Society of Testing and Materials
AWG	American (or Brown and Sharpe) Wire Gauge
AWWA	American Water Works Association
CONNDOT	Connecticut Department of Transportation
DEP	Department of Environmental Protection
EDR	Equivalent Direct Radiation
EPA	Environmental Protection Agency
FWQA	Federal Water Quality Administration
IBR	Institute of Radiator and Boiler Manufacturers
MCB	Master Car Builders
NBS	National Bureau of Standards
NEC	National Electrical Code (latest edition)
NEMA	National Electrical Manufacturers Association
NEWWA	New England Water Works Association
NFPA	National Fire Protection Agency
NPT	National Pipe Thread
SMACNA	Sheet Metal and Air Conditioning Association
OS&Y	Outside Screw and Yoke
STL.WG	United States Steel Wire, Washburn and Moen, American Steel And Wire Companies and Roebling Gauge
USS GAUGE	United States Standard Gauge
WOG	Water, Oil, Gas
WSP	Water Steam Pressure

"Federal Specification" A Federal specification issued by the Federal Supply Services Administration, Washington, D.C.

ARTICLE 13. SUBSURFACE EXPLORATION

13.01 Where applicable, and if provided by the City, boring logs, probes and related information contain data regarding subsurface conditions at the dates and location indicated. This information is shown for the convenience of the Contractor, but is not guaranteed to be correct or complete, and it is not warranted that it represents a true or approximately true picture of the actual subsurface conditions to be encountered.

ARTICLE 14. CONTRACT AND CONTRACT DOCUMENTS

14.01 The City's record copy of the Contract Documents shall control and shall be effective and binding on the Contractor. In the event that any provision in the Contract Documents conflict with any other provision therein, the priority of the documents shall be in accordance with Section 1.2 of the Contract.

ARTICLE 15. SHOP DRAWINGS, CATALOG CUTS AND SAMPLES

15.01 The Contractor shall promptly submit to the Project Engineer five copies of each submittal prepared in accordance with the approved schedule. After examination of such submittal by the Project Engineer and the return thereof, the Contractor shall make such corrections to the submittal as have been indicated and shall furnish the Project Engineer with five corrected copies. If requested by the Project Engineer, the Contractor must furnish additional copies. Regardless of corrections made on, or approvals given to, such submittal by the Project Engineer, the Contractor shall nevertheless be responsible for the accuracy of such submittal. The Contractor shall also be responsible for the submittal's conformity to the Submittal and Specifications, unless the Contractor notifies the Project Engineer in writing of any deviations at the time of submission of the submittal.

15.02 Submittal of all fabricated work shall be submitted to the Project Engineer and no work shall be fabricated unless it is done at the Contractor's own risk until approval has been given by the Project Engineer and City.

15.03 The Contractor shall submit all submittals on dates sufficiently in advance of requirements in order to enable the Project Engineer and City to properly review them. This period shall include time to correct, resubmit and recheck, if necessary, and no claim for delay will be granted to the Contractor because of the Contractor's failure in this respect. The Project Engineer and City will be given a minimum of fourteen (14) consecutive calendar days for the initial review of each submitted submittal.

15.04 All submitted submittals must bear the approval stamp of the Contractor and reference conformance to the applicable provisions of the Specifications as evidence that the Contractor has checked the drawings. Any drawings submitted without this stamp of approval will not be considered and will be returned to the Contractor for resubmission. If the submittals show variations from the requirements of the Contract Documents because of standard shop practice or other reason, the Contractor shall make specific mention of such variation in the letter of submission to the Project Engineer. If the variation is acceptable to the Project Engineer and City, suitable action may be taken for proper adjustment. If not acceptable, the Contractor shall not be relieved from the responsibility for executing the work in accordance with the Contract Documents, although such submittals had been approved.

15.05 Where submittals are submitted by the Contractor that indicate a departure from the Contract Drawings which the Project Engineer deems to be a minor adjustment and in the City's interest and not involving a change in the Contract price or an extension in time, then the Project Engineer may approve the drawings. Such approval will contain, in substance the following:

> The modification shown on the attached drawings is approved in The interest of the City to effect an improvement for the project and is ordered with the understanding that it does not involve any change in the Contract price or time. The modification is generally subject to all Contract stipulations and covenants and it is without prejudice to any and all rights of the City under the Contract.

The approval of submittals will be general and shall not relieve the Contractor from the responsibility for

adherence to the Contract nor of the responsibility for any errors that may exist.

15.06 The Contractor agrees to hold the Project Engineer and the City harmless and to defend them against damage or claims for damages arising out of injury to others or to property of third parties which result from errors on shop or working drawings, whether or not they have been approved by the Project Engineer and/or the City.

15.07 Working Drawings. When required by the Contract or when ordered to do so by the City Representative, the Contractor shall prepare and submit 4 copies of the working drawings to the City Representative for review. These drawings shall be submitted sufficiently (at least 15 consecutive calendar days) in advance of the proposed use, to allow for their review, and any necessary revisions, without delay of the Project. No work covered by these working drawings shall be done until the drawings have been submitted to the City Representative for review and the City Representative's comments have been appropriately taken into account and implemented. The furnishing of the working drawings shall not serve to relieve the Contractor of any part of its responsibilities under the Contract.

ARTICLE 16. CONTRACTOR'S TITLE TO MATERIALS

16.01 No material, supplies or equipment for the work shall be purchased by the Contractor, or by any Subcontractor, subject to any chattel mortgage or under any conditional sale or other agreement by which an interest therein or in any part thereof is retained by the seller or supplier. The Contractor warrants good title to all material, supplies and equipment installed or incorporated in the work. The Contractor further warrants that, upon completion of all work, he will deliver the premises, together with all improvements and appurtenances constructed thereon, to the City free of any claims, liens, charges or encumbrances. The Contractor further warrants that neither the Contractor nor any person, firm or corporation furnishing any material, labor or equipment for any work covered by this Contract shall have a right to lien upon the premises or any improvement or appurtenance thereon.

ARTICLE 17. "OR EQUAL" CLAUSES

17.01 Unless otherwise provided for in the ITB/RFP Documents, the Contract will be on the basis of material and equipment described on the ITB/RFP Documents without consideration of possible substitute or "equal" items. However, subsequent to award of the Work, whenever a material or article required is specified or shown on the plans by using the name of a proprietary product or of a particular vendor or manufacturer, any materials or article which, in the sole discretion of the Project Engineer, is equal or superior to the specified item to material, may be considered an "equal." Requests for substitutions must be supported by evidence such as technical data, test results, or other pertinent information that demonstrate that the substitute offered is equal or better than the specification's requirements. Such items shall not be purchased or installed without the written approval of the Project Engineer. In all cases, only new materials shall be used for the work.

ARTICLE 18. REPRESENTATIONS OF THE CONTRACTOR

18.01 The Contractor represents and warrants:

(a) That he is financially solvent and that he is experienced and competent to perform the type of work or to furnish the plant, material or equipment to be performed or furnished by him; and

(b) That he is familiar with all Federal, State and municipal laws, ordinances, orders and regulations which may in any way affect the work of those employed therein, including but not limited to any special acts relating to the work or to the project of which it is a part; and

(c) That such permanent and temporary work required by the Contract Documents to be done can be satisfactorily constructed and be used for the purpose for which it is intended, and that such construction will not injure any person nor damage any property; and

(d) That he has carefully examined the drawings, specifications and addendum (or addenda) if any, and the site of the work, and that, from his own investigations, he has satisfied himself as to the nature, quality and quantity of surface and subsurface materials likely to be encountered; of the character of equipment required for the work; of other facilities needed for the performance of the work; of the general and local conditions and of all other materials which in any way may affect the work and its performance; and

(e) That he is aware of the hazards involved in the work and the danger to life and property both evident and inherent and that he will conduct the work in a careful and safe manner without injury to persons or property; and that he can provide the necessary equipment, labor and materials to complete the contract work within the specified contract duration.

ARTICLE 19. PROTECTION OF WORK AND PROPERTY (EMERGENCY)

19.01 The Contractor shall at all times safely guard and protect the City's property from injury or loss in connection with this contract. He shall at all times safely guard and protect his own work and that of adjacent property from damage. The Contractor shall replace or make good any such damage, loss or injury unless such is caused directly by errors contained in the Contract or by the City or his duly authorized representatives.

19.02 In case of an emergency that threatens loss or injury of property and/or safety of life, the Contractor will be allowed to act in a diligent manner without previous instructions from the City. He shall notify the City immediately thereafter.

19.03 Where the Contractor has not acted but has notified the City of an emergency threatening injury to persons or damage to the work or to any adjoining property, he shall act as instructed or as authorized by the City.

19.04 The amount of reimbursement claimed by the Contractor on account of any emergency action shall be determined in the manner provided elsewhere in the Contract Documents.

ARTICLE 20. WEATHER CONDITIONS

20.01 In case of temporary suspension of the work, or during inclement weather, or whenever the City shall direct, the Contractor shall carefully protect his work and materials against damage or injury from the weather. The Contractor shall cause all his subcontractors to provide the same protection for their portion of the work. If, in the opinion of the City, any work or material was damaged or injured by reason of failure on the part of the Contractor, or any of his subcontractors, so to protect his work, or otherwise damaged by the negligence of the Contractor or any of his subcontractors or their agents or servants, or is otherwise defective, such materials shall be removed and replaced at the expense of the Contractor.

20.02 For projects involving asphalt paving, all work shall be temporarily suspended, upon direction of the City, when the Contractor can no longer properly pave exposed areas in accordance with the plans and specifications during inclement weather or during winter months.

ARTICLE 21. SUBLETTING

21.01 The Contractor is not to assign, transfer or sublet the Contract in whole or in part to any other person or persons without written permission from the City. The Contractor cannot abridge the terms of the Contract in any way without written permission of the City. The Contractor must keep the Contract in his name and control until all work is completed the City has issued a Notice of Project Acceptance for the Project. The Contractor shall likewise not assign any of the money payable under this Contract. Approval by the City of the subletting of any part of the work shall not, under any circumstances, relieve the Contractor or his Surety of any liabilities or obligations under the terms of the Contract Documents.

21.02 The Contractor shall be as fully responsible to the City for the acts and omissions of his subcontractors, and of the persons either directly or indirectly employed by them, as he is for the acts and omissions of persons directly employed by him. Should any subcontractor violate any of the terms of these specifications, the City may, at its option, require the Contractor to end and terminate such subcontract.

21.03 The Contractor shall cause appropriate provisions to be inserted in all subcontracts relative to the work to bind subcontractors to the Contractor by the terms of the Contract and the General Conditions and other provisions of the Contract Documents. This language is to be applicable insofar as necessary to the work and is to give the Contractor the same power over as regards terminating any subcontract as the City may exercise over the Contractor under any provisions of the Contract Documents.

21.04 Nothing contained in this Contract shall create any contractual relation between the City and any subcontractor.

ARTICLE 22. SUBSTITUTE BOND

22.01 If, at any time, the Contractor's Surety or Sureties, or the carriers of other insurance herein specified to be written, become insolvent or, in a reasonable judgment of the City, become unsafe or unsound then, upon five days written notice from the City to the Contractor, the Contractor shall substitute such Performance and Labor and Material Bond or insurance with such other Surety or carrier in such form as shall be acceptable to the City. Any additional premium caused by such substitution shall be paid for by the Contractor. No further payments will be deemed due nor will be made until the new Surety or Sureties have furnished such an acceptable bond to the City.

ARTICLE 23. RIGHT TO WITHHOLD PAYMENTS

23.01 The City may withhold from the Contractor so much of any approved payments due as may in the judgment of the City be necessary to:

1. Assure the payment of any lien, stop notice or claim, filed with the City for work, labor, or materials done, performed or delivered and used in the prosecution of the work herein provided for (whether in strictly legal form or otherwise)
2. Protect the City from loss due to defective work not remedied or through any improper or defective machinery, implements or appliances used by the Contractor or for failure of the Contractor to fully comply with any requirements of the Contract
3. Protect the City from loss due to injury to persons or damage to work or property of other contractors, subcontractors or others caused by the act' or neglect of the Contactor or any subcontractors.

23.02 The City shall have the right, as agent for the Contractor, to apply any amounts so withheld in such manner as the City may deem proper to satisfy such claims or to secure such protection. Such applications of such money shall be deemed payments to the account of the Contractor.

23.02 Notwithstanding the above, the Contractor, in conformance with Section 49-41a of the Connecticut General Statutes, as revised, shall, within 30 consecutive calendar days after any given Contract payment to the Contractor by the City, pay any amounts due any subcontractor, whether for labor performed or materials furnished.

ARTICLE 24. PAYMENTS BY CONTRACTOR

24.01 The Contractor, in conformance with Section 49-41a of the Connecticut General Statutes, as revised, shall, within 30 consecutive calendar days after any given Contract payment to the Contractor by the City, pay any amounts due any subcontractor, whether for labor performed or materials.

ARTICLE 25. NOTICE OF WARNING

25.01 If the Contractor shall fail to make prompt payment to persons supplying labor or materials for the work; or refuse or fail to supply enough properly skilled workmen or proper materials; or refuse or fail to prosecute the work or any part thereof in accordance with the Contract Documents or with such diligence as will insure its completion within the period herein specified (or any duly authorized extension thereof); or fail to complete the work within said period; or refuse to regard laws ordinances, codes or instructions of the City then the City shall forward A Notice of Warning to the Contractor by registered mail at the address given in the Contract. In the event the Contractor fails to comply with said Notice of Warning within five (5) consecutive calendar days from receipt thereof, the City shall have the right to terminate the Contract.

ARTICLE 26. PROGRESS MEETINGS

26.01 Progress meetings will be held weekly at locations, dates and times selected by the City for the purpose of reviewing, scheduling and coordinating the Project's progress as well as other matters.

ARTICLE 27. PERMITS

27.01 The Contractor shall keep himself fully informed of all existing and current Municipal, State or Federal

ordinances, regulations or laws in any way limiting or controlling the operations or actions of those engaged in the work or affecting the materials supplied to or by them. The Contractor shall at all times observe and comply with all such valid and binding ordinances, laws or regulations. The Contractor shall protect and indemnify the City and its representatives against any claims arising from, or based upon, any violation of the same.

ARTICLE 28. RIGHT TO USE THE WORK

28.01 The City may enter upon the use of the whole or of any portion of the work, which may be in condition to use, at any time before its issuance of a Notice of Project Acceptance by the City. Such use shall not constitute, or be evidence of, acceptance by the City or by the Project Engineer of the whole or any part of the material furnished or work performed under the Contract.

ARTICLE 29. PROVISIONS REQUIRED BY LAW

29.01 Each and every provision of law and clause required to be inserted in this Contract shall be deemed to be inserted herein and the Contract shall be read and enforced as though it were included herein. If, through mistake or otherwise, any such provision is not inserted, then, upon application of either party, the Contract shall forthwith be physically amended to make such insertion.

29.02 If this Contract contains any unlawful provisions not an essential part of the general structure of the Contract, and which shall not appear to have been a controlling or material inducement in the making thereof, the same shall be deemed stricken from the Contract without affecting the binding force of the remainder.

ARTICLE 30. WAIVER

30.01 Neither the inspection by the City or Project Engineer or by any of their employees; nor any order, measurement or certificate by the Project Engineer; nor any order by the City for the payment of any money; nor any payment for or acceptance of the whole or any of the work by the Project Engineer for the City; nor any extension of time; nor any possession taken by the City or its employees shall operate as a waiver of any provision of this Contract or of any power herein reserved to the City. Nor shall such action waive any right to damages herein provided. Nor shall any waiver of any breach of the Contract constitute a waiver of any other or subsequent breach. Any remedy provided in this Contract shall be construed as cumulative - i.e. in addition to each and every other remedy herein provided.

ARTICLE 31. USE OF PREMISES AND REMOVAL OF DEBRIS

31.01 The Contractor expressly undertakes at his/her own expense:

1. To take every precaution against injuries to persons or damage to property.
2. To store apparatus, materials, supplies and equipment in such orderly fashion at the site of the work as will not unduly interfere with the progress of the work or the work of any other contractor.
3. To place upon the work or any portion thereof only such loads as are consistent with the safety of that portion of the work.
4. To frequently clean up all refuse, rubbish, scrap materials and debris caused by the Contractor's operations to the end that at all times the site of the work shall present a neat, orderly and work manlike appearance.
5. To remove all surplus material; falsework; temporary structures including foundations thereof; plant of any description and debris of any nature resulting from the Contractor's operations before Final Completion.
6. To put the site in a neat orderly condition, to remove all clean-up materials, to remove such materials from the construction site, and to deposit them in a refuse disposal site at his/her expense.
7. To effect all cutting, fitting or patching of work required to make the same conform to the Drawings and Specifications and, except with the consent of the City, not to cut or otherwise alter the work of any other contractor.

ARTICLE 32. RIGHT-OF-WAY AND SUSPENSION OF WORK

32.01 Land and rights-of-way for the purposes of this Contract will be furnished by the City to the extent shown on the Drawings. The City will use diligence in acquiring said land and rights-of-way as speedily as possible. However, it is possible that not all land and rights-of-way will be obtained as herein contemplated before construction

commences. In such case the Contractor shall begin the work upon such land and rights of-way as the City may have previously acquired. No claim for damages whatsoever will be allowed by reasons of the delay in obtaining the remaining lands and/or rights-of-way. Should the City be prevented or enjoined from proceeding with the work, or from authorizing its prosecution, either before or after the commencement, by reason of litigation or by reason of its inability to procure any lands or rights-of-way for the said work, the Contractor shall not be entitled to withdraw from the Contract because of these occurrences. In the event of any of the above occurrences, the time for completion of the work may be extended in the manner provided elsewhere in the Contract Documents.

ARTICLE 33. CONSTRUCTION EQUIPMENT AND MACHINERY

33.01 The Contractor shall furnish and maintain, at its own cost and risk, all tools, apparatus and appliances, hoists and/or cranes and power for same, scaffolding, runways, ladders, temporary supports and bracing and all other similar work or material necessary to insure speed, convenience and safety in the execution of its Contract. All such items shall be subject to approval of the City, upon the Project Engineer's recommendation, as to general stability, type and location, but the responsibility for proper design, strength and safety shall remain with the Contractor. All such items shall comply with OSHA regulations and all other applicable codes, statutes, rules and regulations.

33.02 The Contractor shall provide all drains, drainage, ditches and pumping apparatus (including power and attendance for same) that may be necessary to keep all excavations and sub-grade work free from water.

33.03 All machines, equipment, trucks and vehicles used in the prosecution of the work, or in connection therewith, shall be in proper working condition at all times. Only gasoline, electric or diesel engines shall be used for the power in operating equipment.

33.04 The Contractor shall be responsible for curtailing noise, smoke, fumes or other nuisances resulting from the operations. The. Contractor shall, upon written notification from the City or Project Engineer, make any repairs, replacements, adjustments or additions and furnish mufflers when necessary to' fulfill requirements. No oil tanks for fueling equipment shall be stored less than one hundred (100) feet from any watercourse.

33.05 All costs involved in complying with the stipulations outlined shall be included in the various prices in the bid/proposal.

ARTICLE 34. CONTRACTOR'S GENERAL GUARANTEE/WARRANTY PERIOD

34.01 The Contractor's General Warranty Period shall commence on the date of issuance of a Notice of Project Acceptance by the City and during such time Contractor shall guarantee his work is free from faulty materials and workmanship.

34.02 Within the Contractor's General Warranty Period, any portion of the Work shall, in the opinion of the City, require repairing, replacing or rebuilding, the Contractor shall start such repairs within five (5) consecutive calendar days after receipt of notice from the City. If the Contractor shall fail to or neglect to start the repairs within five (5) consecutive calendar days, the City may employ such other person or persons as it may deem proper to make such repairs. The City will charge the Contractor the cost thereby incurred. Nothing herein provided shall limit the liability of the Contractor or Surety to the City for non-performance of the Contractor's obligations at any time.

34.03 The Payment and Performance Bonds, and Material Bond, if required, shall remain in full force and effect through the Contractor's General Warranty Period.

34.04 Deficiencies in the Work discovered after the date of the issuance of a Notice of Project Acceptance by the City shall be deemed General Warranty Work. Such deficiencies shall be corrected by Contractor under this Article.

34.05 The Contractor shall remedy any defects due to faulty materials or workmanship within thirty (30) consecutive calendar days of receiving notice thereof by the City. Should the Contractor fail to correct the deficiency within thirty (30) consecutive calendar days, the City may perform the corrective work and Contractor shall be responsible for all reasonable costs incurred by City in performing such correction.

ARTICLE 35. PROCEDURE IN CONSTRUCTION

35.01 The Contractor shall start work and carry it on at such point or points and in such order of precedence and at times and seasons as may be determined by the City. The Contractor shall complete the various portions of the work in accordance with the schedule approved by the City.

35.02 A complete organization, complement of equipment and ample materials shall be on hand before actual work commences. The Contractor shall so arrange his/her organization, plant, equipment and materials so that construction operations will be carried on continuously. The Contractor will not be permitted to reduce the force of workers or remove any equipment from the work if such reduction or removal impairs the progress of the work.

35.03 In the event that the City awards more than one contract to the Contractor, the Contractor shall be required to prosecute the work on each contract simultaneously. The Contractor will be required to maintain a separate and independent organization and staff, labor forces and machinery on each contract in order to complete the work within the time set forth for the respective contracts.

ARTICLE 36. APPRENTICES

36.01 Apprentices shall be permitted to work only under a bonafide apprenticeship program registered either with the State Apprenticeship Council or with the Bureau of Apprenticeship, United States Department of Labor.

ARTICLE 37. CONTROL OF WORK

37.01 The Contractor shall abide by all orders, directions and requirements of the Project Engineer in the performance of the work.

37.02 In the event the Contractor is not personally present at the project site, he/she shall have a superintendent present at the site that possesses more than adequate communication skills. The superintendent must have proper knowledge of all applicable project requirements and conditions and must have authority to fully represent the Contractor with power to act and to be the recipient of orders and to obey all the instructions of the Project Engineer and/or the City. If proper provision for the carrying out of this stipulation is not made, then the Contractor shall be held responsible for the execution of such orders and instructions which the Project Engineer and/or City may deem necessary to issue to any employee regarding the work. The City or Project Engineer may order the work stopped until a duly authorized representative of the Contractor appears and receives instructions. No claims for damages or for an extension time in which to complete the work because of such delay will be allowed the Contractor.

37.03 In all cases, the Project Engineer shall determine classifications, quantities, quality, acceptability and fitness of the several kinds of work that are to be paid for under the Contract. The Project Engineer and/or City shall interpret the Plans and Specifications and any extra work orders and shall determine all questions in relation to said work and to the construction thereof.

37.04 The Contractor shall not employ any plant, equipment, material, methods or workers to which the City objects. The Contractor shall not remove any plant, materials, equipment or other facilities from the site of the work without the City's permission.

ARTICLE 38. CITY'S CONTROL NOT LIMITED

38.01 The enumeration in this Contract of particular instances in which the opinion, judgment, discretion or determination of the City shall control, and in which work shall be performed to the City's satisfaction and approval or inspection, shall not imply that only matters similar to those enumerated shall be so governed. Without exception all the work shall be so governed and performed.

ARTICLE 39. AUTHORITY AND DUTIES OF INSPECTORS

39.01 Inspectors shall be authorized to inspect all work done and all materials furnished. Such inspection may extend to all parts of the work and to the preparation or manufacture of the materials to be used. In the case of any dispute

arising between the Contractor and an Inspector as to materials furnished, or as to the manner of performing the work, the Inspector shall have the authority to reject material or to suspend the work until the question at issue can be referred to, and decided by, the City.

39.02 The Inspector shall not be authorized to revoke, enlarge, relax or release any requirements of these Specifications nor to approve or accept any of the provisions of the Contract Documents. The Inspector shall in no case act as a foreman or perform other duties for the Contractor. The Inspector shall not interfere with the management of the work by the Contractor. Any advice, which the Inspector may give the Contractor, shall not be construed as binding the City or the Project Engineer in any way. Such advice will not release the Contractor from the fulfillment of the terms of the Contract.

ARTICLE 40. INSPECTION AND CORRECTION OF WORK

40.01 All material furnished and work done will be inspected by the Project Engineer. The Project Engineer shall condemn any work or materials not in accordance with the Contract Documents. All condemned work and materials shall be removed and other work and materials furnished in accordance therewith. All materials rejected by the Project Engineer as being unfit for the particular clause in the Specifications to which they refer shall be removed from the site. Removal shall be within twenty-four (24) hours or shorter if the Project Engineer so directs. Should the Contractor refuse to remove the work and materials as ordered, then the Project Engineer may stop the Contractor from proceeding with the work. The City may supply workers and materials to remove the condemned work and materials at the expense of the Contractor.

40.02 Failure on the part of the Project Engineer, or any authorized Inspectors, to detect inferior work or materials, and to condemn the same, shall not be construed to imply an acceptance of such work or materials. Such failure shall not be construed as barring the City, at any subsequent time, from the recovery of such sum of money from the Contractor which may be required to construct or to build anew all portions of the work in which fraud was practiced, improper work executed or improper material furnished and built into the work. The Contractor shall furnish all necessary facilities should it be desirable at any time to make an examination of the work already completed.

40.03 If any work is found defective in any respect, the expense of the examination must be borne by the Contractor. If all work is found satisfactory, the expense of the examination will be paid for in the manner provided for elsewhere in the Contract Documents. If all work is found satisfactory, the expense of the examination will be paid for in the manner provided elsewhere in the Contract Documents.

40.04 If, in the opinion of the City, it is undesirable to reconstruct or correct any portion of the work injured or not performed in accordance with the Contract Documents, the Contractor's compensation hereunder shall be reduced by such amount as may be equitable under all circumstances.

ARTICLE 41. CONTRACTOR'S OBLIGATIONS

41.01 The Contractor shall and will, in good workmanlike manner, do and perform all work and furnish all supplies and material, machinery, equipment, facilities and means, except as herein otherwise expressly specified, necessary or proper to perform and complete all work required by this Contract. All to be accomplished within the time specified; in accordance with the provisions of this Contract and Specifications; in accordance with the Plans and Drawings pertaining to this Contract; in accordance with any and all supplemental Plans and Specifications and in accordance with the directions of the City as given from time to time during the progress of the work. The Contractor shall furnish, erect, maintain and remove such construction plant and such temporary work as may be required. The Contractor alone shall be responsible for the safety, efficiency and adequacy of the plant, appliances and methods. The Contractor shall be responsible for any damage, which may result from their failure or from their improper construction, maintenance or operation. The Contractor shall observe, comply with and be subject to all terms, conditions, requirements and limitations of the Contract and the Specifications. The Contractor shall do, carry on and complete the entire work to the satisfaction of the City.

41.02 The Contractor shall be solely responsible for all the work and shall provide all precautionary measures necessary for preventing injury to persons or damage to property. All injury or damage, of whatever nature, resulting from the work, or resulting to persons, from whatever cause, shall be the responsibility of, and shall be borne and sustained by, the Contractor. The Contractor shall hold the City and Project Engineer, or their agents, harmless and shall defend and indemnify the City and Project Engineer, or their agents, against damages, or claims for

damages, due to injury to .persons or to property arising out of the execution of work and for damages to material furnished for the work; for infringement of inventions, patents and patent rights used in doing the work; for damages arising out of the use of any improper material, equipment or labor used in the work and for any act of omission by any subcontractors therein. The Contractor shall bear all losses including, but not limited to, losses sustained on account of the character, quality or quantity of any part or all of the work, or because the nature of the land in or on which the work is done being different from what may have been estimated or indicated, or on account of the weather, elements or other causes, except for acts beyond the reasonable control of the Contractor.

ARTICLE 42. TOILET ACCOMMODATIONS AND DRINKING WATER

42.01 The Contractor shall provide necessary sanitary toilet accommodations and drinking water for the workers. Separate facilities shall be provided for female workers.

ARTICLE 43. SAFETY AND HEALTH REGULATIONS

43.01 These documents, and the joint and several phase of construction hereby contemplated are to be governed at all times by applicable provisions of the Federal law(s), including, but not limited to, the latest amendments of the following:

1. Williams-Steiger Occupational Safety and Health Act of 1970, Public Law 91-956.
2. Part 1910 - Occupational Safety and Health Standards; Chapter XVII of Title 29, Code of Federal Regulations.
3. Part 1926 - Safety and Health Regulations for Construction, Chapter XVII of Title 29, Code of Federal Regulations.

43.02 This project is subject to all of the Safety and Health Regulations (see 29 CFR 1926m as amended) as promulgated by the U. S. Department of Labor on June 24, 1974. The Contractor shall thoroughly familiarize him/herself with the requirements of these regulations.

ARTICLE 44. OWNERSHIP OF DRAWINGS AND SPECIFICATIONS

44.01 Subsequent to award of the contract, with the exception of the Contractor's executed set, all drawings and specifications are the property of the City. The City shall furnish one (1) paper and one electronic set, in PDF Format, of the construction drawings and specifications to the Contractor without charge. No additional sets will be furnished ~~ined~~ by the City. Such drawings and specifications are not to be used in other work.

ARTICLE 45. RESIDENTS' PREFERENCE IN WORK ON OTHER PUBLIC FACILITIES

45.01 Except to the extent prohibited by Federal or State statute, the Contractor shall comply with the provisions of Section 31-52a of the General Statutes of the State of Connecticut, Revision of 1967, a part of which is quoted as follows:

Section 2(b) each contract for any such project covered by this section under the supervision of the State or any of its agents shall contain the following provision:

"In the employment of mechanics, laborers or workmen to perform the work specified herein, preference shall be given to residents of the State who are and, continuously for at least six months prior to the date hereof, have been residents of the State, and if no such person is available, then to residents of other states."

ARTICLE 46. LISTING OF EMPLOYMENT OPENING

46.01 This Contract is executed subject to the Governor's Executive Orders No. 3 and No. 17, which are hereby made a part of this agreement. The Governor's Executive Order No, 17 requires, inter alia, that all contractors and subcontractors shall list all employment openings with the office of the Connecticut State Employment Service in the area in which the work is to be performed or where the services are to be rendered. Failure of the Contractor to conform to the requirements of the Governor's Executive Orders No. 3 and No. 17, and any orders, rules, or regulations issued pursuant thereto, shall be a basis for termination of this agreement by the City.

ARTICLE 47. SERVICE OF PROCESS

47.01 The Contractor, if not a resident of the State of Connecticut, or, in the case of a partnership, the partners, if not residents, hereby appoint(s) the Secretary of State of the State of Connecticut, and successors in office, agent for service of process. Such service, as arising out of, or because of, this Contract. Such appointment shall in effect throughout the life of this Contract and for a period of six (6) years thereafter.

ARTICLE 48. CITY OF WATERBURY ORDINANCE CHAPTER 34

48.01 For projects subject to the City's GOOD JOBS ORDINANCE (Code of Ordinances Chapter 34), the provisions thereof are in addition to any requirements of these General Conditions, and to any requirements of all funding sources for the Project, but only to the extent permitted by federal and state law.

ARTICLE 49. WAGE RATES

49.01 The wages paid on an hourly basis to any mechanic, laborer or workman employed upon the work herein, contracted to be done shall be at a rate equal to the rate customary or prevailing for the same work in the same trade or occupation in the City of Waterbury. The amount of payment or contribution paid or payable on behalf of each such employee to any employee welfare fund (as defined in Section 31-53 of the Connecticut General Statutes) shall also be at a rate equal to the rate customary or prevailing for the same work in the same trade or occupation in the City of Waterbury. If the Contractor is not obligated by agreement to make such payment or contribution on behalf of such employees to any such welfare fund, the Contractor shall pay to each employee the amount of payment of contribution for his classification on each payday as part of his wages.

49.02 For Prevailing Wage Rate projects, the Contractor shall furnish to the Project Engineer certified copies of payrolls showing the names of its employees working on the Project, the specific days and hours and number of hours that each of them has spent in doing so, and the amount paid to each person for said work.

ARTICLE 50. SCHEDULE AND POSTING OF MINIMUM WAGE RATES

50.01 Where applicable, the Contractor, and every subcontractor, shall post a legible copy of the Minimum Wage Rates and Classifications included in the Contract Documents. This posting shall be in a prominent and accessible place at the site of the work (See ARTICLE 49). The schedule shall show all determined minimum wage rates for the various classes of laborers and mechanics to be engaged to work on the project. The schedule shall also show all deductions, if any, required by law to be made from wages actually earned by the laborers and mechanics so engaged.

50.02 The rates established by each schedule are the minimum and all employees shall be paid no less than the established rate for each trade or occupation. In the case of a conflict between schedules in anyone trade or occupation, the higher rate listed shall control and such higher rate shall be considered to be the minimum.

50.03 State: Where applicable, the minimum rates of wages and schedule of supplements to be provided for the various trades shall be in accordance with the Prevailing Wage rate Schedule included herein. The rate of wages and schedule of supplements for any trade not appearing or mentioned in this schedule shall be in accordance with the prevailing rates established for that particular trade by the Connecticut Department of Labor or by the Comptroller or other analogous officer of the City of Waterbury. Minimum wages required to be paid shall include supplements for hospital, surgical, medical or other benefits as determined by all applicable section of the General Statutes of the State of Connecticut. The Contractor shall file a Wage Certification Form with the Labor Department of the State of Connecticut prior to beginning work on the site.

50.04 If for any reason and at any time, the Federal Government, the State of Connecticut, or the City of Waterbury, shall in any way supplement, change or amend the Prevailing Wage Rates Schedule, then the Contractor or subcontractor shall follow such Schedule as supplemented, changed or amended. In no case shall the Contractor or subcontractor be entitled to any additions, compensations or extras because of any supplement, change, amendment or predetermination of the Prevailing Wage Rate Schedule.

50.05 Federal Wage Rates, where applicable, shall be applied in any case where they exceed the State of Connecticut Minimum Wage rates or in any case where a rate has not been established by the State.

ARTICLE 51. COMPUTATION OF WAGES AND OVERTIME COMPENSATION

51.01 The Contractor and each subcontractor shall comply with all applicable Federal, State and local laws or ordinances with respect to the hours worked by laborers and mechanics engaged in work on the project. The Contractor and all subcontractors shall also comply with all applicable Federal, State and local ordinances with respect to compensation for overtime hours worked by laborers and mechanics engaged in work on the project.

ARTICLE 52. WAGE UNDERPAYMENTS AND ADJUSTMENTS

52.01 In addition to any applicable Federal or State regulations, the City may, in the case of underpayment of wages to any worker on the project under this Contract by the Contractor or by any subcontractor, withhold an amount from payments due the Contractor. Said amount to be sufficient to pay such worker the difference between the wages required to be paid the worker under this Contract and the amount actually paid the worker for the total number of hours worked. The City will disburse such amount so withheld by it for, and on behalf of, the Contractor to the employee to whom the amount is due. Such monies withheld pursuant to this article will be in addition to percentages to be retained pursuant to other provisions of the Contract.

ARTICLE 53. CONFORMANCE OF WORK

53.01 The work, during its progress and at its completion, shall conform to the work as shown on the drawings and to the directions given by the Project Engineer from time to time. The work shall be subject to such modifications or additions as the Project Engineer may deem necessary during the execution of the work. In no case will any work be paid for which is performed in excess of such requirements. The work shall also be accomplished in accordance with the Specifications.

ARTICLE 54. DIMENSIONS AND SCHEDULES

54.01 The Contractor will be required to check all dimensions and quantities shown on the drawings or schedules given to him by the Project Engineer. The Contractor shall notify the Project Engineer of all errors therein which he may discover by examining and checking the same. The Contractor shall not take advantage of any error or omission in these specifications, drawings and schedules. The Project Engineer will furnish all instructions should such error or omission be discovered and the Contractor shall carry out such instructions as if originally specified.

ARTICLE 55. PROTECTION FROM STORM

55.01 Should storm warnings be issued, the Contractor shall take every practicable precaution to minimize danger to persons, to the work and to adjacent property. These precautions shall include closing all openings; removing all loose materials, tools and/or equipment from exposed locations; and removing or securing scaffolding and other temporary work.

55.02 The Contractor shall provide measures to prevent stormwater runoff from entering excavation areas.

ARTICLE 56. PROTECTION OF WORK AND MATERIALS

56.01 The Contractor shall assume full responsibility for the protection of the work and materials during the progress of construction, and until issuance of a Notice of Project Acceptance by the City, against loss or damage by any cause or agency. The Contractor shall, at his own expense, provide efficient means for such protection.

ARTICLE 57. FURTHER SAFEGUARDS

57.01 In case the City or the Project Engineer shall at any time be dissatisfied with the means provided by the Contractor for any aforesaid protection of the work or of any other properties, the City or the Project Engineer may order additional measures and precautions for that purpose. The Contractor, at his own expense, shall immediately comply with such orders and carry them out.

ARTICLE 58. FIRST AID TO INJURED

58.01 The Contractor shall keep on site, ready for immediate use, all articles necessary for giving first aid to injured employees. He shall also provide arrangements for the immediate removal and hospital treatment of any injured employee who may require such treatment.

ARTICLE 59. CONFORMANCE WITH DIRECTIONS

59.01 The Project Engineer may make alterations in the lines, grades, forms, dimensions or materials to be used in the project, or any part thereof, either before or after the commencement of construction. If such alterations diminish the quantity included in any item of work to be done and paid for at a unit price, the Contractor shall have no claim for damages or for anticipated profits on the work thus dispensed with. If the changes increase the quantity included in any such item, such increase shall be paid for at the stipulated unit price.

ARTICLE 60. COMPETENT HELP TO BE EMPLOYED

60.1 The Contractor shall employ an experienced foreman, craftsmen and other workmen competent in the work in which they are to be engaged. All work shall be accomplished by able, skilled and competent personnel. If any person employed on the work by the Contractor shall appear to be incompetent or unreliable in any way, he shall be discharged immediately upon the request of the Project Engineer and shall not be again employed upon the work.

ARTICLE 61. STREETS AND SIDEWALKS TO BE KEPT OPEN

61.01 The Contractor shall keep the street and sidewalks in which he may be working open at all times to pedestrian and vehicular traffic. If, in the opinion of the City or the Project Engineer, the interest of abutters and the public requires it, the Contractor shall bridge or construct plank crossings over trenches at street crossings, roads or private ways. The Contractor shall conduct his work for this project in such manner as the City or the Project Engineer may direct from time to time. No sidewalk shall be obstructed where it is possible to avoid it. No additional payment shall be made to the Contractor for such work.

61.02 The Contractor shall provide all necessary fire crossings at principal intersections or ways usually traveled by fire apparatus. The Contractor shall make provision for the passage of fire apparatus to the work area, including along the line of pipeline installations.

61.03 All work shall be conducted in such a manner as to create minimum interference with existing businesses and commercial establishments. Such establishments shall be allowed to conduct business at all times during the construction.

61.04 The Contractor shall be responsible for taking all steps necessary to minimize dust emanating from the project and for keeping the streets free of the accumulation of sand and other similar materials.

ARTICLE 62. LIGHTS, BARRIERS, FENCES, WATCHMEN AND INDEMNITY

62.01 The Contractor shall put up and maintain such barriers, fences, lighting, and warning lights, danger warning signals and signs as will prevent accidents during the construction. The Contractor will protect the work and will insure the safety of the personnel and of the public at all times and places. The Contractor shall defend, indemnify and save harmless the City its agents in every respect from any injury or damage whatsoever caused by any act, omission or neglect of the Contractor or his subcontractors, or their servants or agents. Such indemnification shall also include any claims arising out of failure to erect and maintain sufficient railing or fencing as required by Section 13a-111 of the Connecticut General Statutes. The fact that the City may retain control of the premises, or that the City, or its agents, may take action to erect or maintain railings or fencing shall not relieve the Contractor's obligations hereunder.

62.02 The Contractor shall furnish, maintain and use all necessary safety devices; follow all such safety practices in the prosecution of the work and shall adopt, follow and maintain such additional safety measures as, in the opinion of the Project Engineer, are conducive to safe operation by the Contractor. The Contractor shall cause his subcontractor(s) to also adopt, follow and maintain these measures. All of this shall be done at the Contractor's or subcontractor's own expense. The City shall have the right to order any or all work suspended where, in the

opinion of the City, such work is not being carried on in a safe and proper manner or where persons or property are not being properly protected or safeguarded. Such work shall not be resumed until the City's requirements have been met and the City or Project Engineer has directed that work be resumed. Any work so suspended shall be at the Contractor's expense.

62.03 In addition to the above, when as is necessary or when required by the City and/or the Project Engineer, the Contractor shall post signs and shall employ watchmen or flagmen for the direction of the traffic at the site and for excluding unauthorized persons from the site at all times. The Contractor will not be paid additional compensation for this work.

62.04 At all times the Contractor shall be responsible for excluding all persons from land within easement areas and all persons not directly connected with the work or authorized by the City and/or the Project Engineer to be within the project limits.

ARTICLE 63. WORK OUTSIDE REGULAR HOURS

63.01 Night work or work on Saturdays, Sundays or legal holidays requiring the presence of the City, Project Engineer or an Inspector will not be permissible except in the case of emergency and then only upon approval of the Project Engineer. Should it be desired or required for by the City or Project Engineer to operate an organization for continuous night work, the lighting, safety and other facilities that are deemed necessary for performing such night work shall be provided by the Contractor. For night work on Saturdays, Sundays or legal holidays, if any be performed, the Contractor will receive no extra payment. Compensation for such work shall be considered as having been included in the prices stipulated for the appropriate items of work as listed in the bid/proposal.

ARTICLE 64. BUS LINE INTERFERENCE

64.01 Whenever it may be necessary to interfere with any bus lines, notice shall be given to the corporation or agency owning the same. A reasonable amount of time shall be given to said organization in order to rearrange their schedule(s) as may be necessary.

ARTICLE 65. COLD WEATHER WORK

65.01 The Project Engineer will determine when low temperature conditions are unfavorable for work and may order the work, or any portions of it, suspended whenever, in his opinion, the conditions are not such as will insure first class work.

65.02 All methods and materials used in the performance and for the protection of the work in cold weather shall be subject to the approval of the Project Engineer. The Contractor shall take the necessary precautions to protect the work from damage and to remove ice and frost from materials. The removal shall include all necessary heating and the additional removal of any resultant water. The Contractor shall also supply any required sand and/or coarse aggregate required to prevent slipping on ice.

65.03 Except for specific work for which the City has issued a Certificate of Limited Acceptance of the Work, the Contractor shall be responsible for maintaining the project roadways, sidewalks, ramps, driveway aprons and asphalt pathways from the time of contract signing until the issuance of a Notice of Project Acceptance by the City. This responsibility will include snow and ice removal, sanding and mechanical sweeping, and patching with materials approved by the Project Engineer for all roadways, sidewalks, ramps, driveway aprons and asphalt pathways, etc. within the project limits.

65.04 The Contractor shall not continue road excavation after bituminous concrete plants have shut down for the winter. At that time, the Contractor shall request a "winter shutdown". The Contractor shall receive no extra payment for any labor, apparatus, tools or materials necessary to comply with the above requirements, but compensation shall be construed items of work as listed in the bid/proposal form.

ARTICLE 66. BLASTING AND EXPLOSIVES

66.01 No blasting shall be allowed without the Contractor's securing of a permit and permission from the office of the Waterbury Fire Marshall. The Marshall's office is located at 185 South Main Street, Garden Level, (1 Jefferson Square), Waterbury, CT 06702 Phone: (203) 597-3452. The Marshall's office must be advised between 7:00 AM

and 10:30 AM of each day's blasting schedule.

66.02 Explosives for blasting shall be stored, handled and used in accordance with the laws, ordinances and regulations of the State of Connecticut; with all local regulations and with such other additional regulations as the City Representative may require. Blasting shall be conducted so as not to endanger persons or property. The Contractor shall be responsible for, and shall make good any damages of whatever nature caused by blasting or accidental explosions.

66.03 The Contractor shall also adhere to any additional conditions imposed by the Fire Marshall's office. Additionally, the Contractor shall have a pre-blast survey conducted of the adjacent area(s) at no cost to the City.

66.04 Steel or rubber matting shall be used at all blast sites where required by the Bureau of Fire Prevention. Any blast or shot involving more than 99 pounds of explosives must be monitored by the use of seismographs. All seismographs are at the expense of the Contractor. Wire and debris must be cleared from all areas.

66.05 The Contractor shall notify each utility with facilities in proximity to the site of such blasting operations, and any other individuals and entities that may be affected thereby of the Contractor's intention to use explosives; and such notice shall be given sufficiently in advance of any blasting to enable such affected parties to take steps to prevent such blasting from injuring persons or property. Such notice shall not relieve the Contractor of responsibility for damage resulting from its blasting operations.

66.06 Where blasting is required subsequent to commencement of construction, insurance, as required by the City's Risk Manager shall be obtained by the Contractor, and approved by the City's Risk Manager.

ARTICLE 67. TUNNELING

67.01 Tunneling will not be permitted without the express written consent of the City.

ARTICLE 68. RESERVED MATERIALS/EXCAVATED MATERIALS

68.01 Materials excavated from trenches and excavations and those used in the construction of the work shall be deposited in such a manner so that they not endanger persons or the work. Materials shall also be deposited in such a manner that free access may be had at any time to all hydrants and gates near the work. The materials shall be kept trimmed-up so to be of as little inconvenience as possible to public travel or to adjoining tenants. All excavated materials not approved for backfill and/or fill; all surplus material; all rock and all boulders resulting from excavations shall be removed and satisfactorily disposed of off the site by the Contractor at no additional cost to the City.

68.02 Any excavated material not used in the installation of contracted items shall be removed from the site and legally disposed of by the contractor.

ARTICLE 69. OBSTRUCTIONS AND CROSSOVERS

69.01 Whenever any trench or other excavation obstructs pedestrian and/or vehicular traffic in or to any public street, private driveway or property entrance or to private property, the Contractor shall employ such means as may be necessary to maintain pedestrian and vehicular traffic and access. The Contractor shall construct and maintain suitable plank crossings and bridges to carry essential traffic in or to the street, driveway or property in question as specified or as directed. These crossings shall be maintained for as long as it is not expedient to backfill the excavation or until such time as sufficient, supportive backfill may be placed. No additional payment will be made for this work.

69.02 Movement of construction equipment and all other vehicles and loads over and adjacent to any slotted drain pipe shall be done at the Contractor's risk. Any pipe or backfill which becomes damaged or disturbed through any cause shall be replaced or repaired as directed by the City at the expense of the Contractor and at no cost to the State. Suitable temporary crossovers consisting of steel plate or other materials approved by the City shall be employed for a minimum of 7 consecutive calendar days following concrete backfill operations in all areas where vehicular traffic must be maintained or until such time as the pipe installation will withstand loading without damage. All concrete surfaces shall receive a protective coating. End cap installation shall be as recommended by the manufacturer.

ARTICLE 70. DIRECTIONAL SIGNS AND LIGHTS

70.01 Suitable signs, lights and such required items to direct traffic shall be furnished and maintained by the Contractor. No additional payment shall be made for this work.

ARTICLE 71. MAINTENANCE OF WORKPLACE

71.01 The Contractor must keep streets and premises free from unnecessary obstructions, debris and all other materials. The City or Project Engineer may, at any time, order all equipment, materials and surplus from excavations to be removed from the work area. Debris and all other materials lying outside of the working area shall be promptly removed. Should the Contractor fail to remove such material within 24 hours of notice to remove, the City or Project Engineer may cause any or all of said materials to be removed by others. The cost of this removal shall be deducted from any monies, which may be, or may become, due the Contractor under the Contract. In special cases, the City or Project Engineer may cause such materials to be removed without prior notice.

ARTICLE 72. OPERATIONS AT SEVERAL POINTS

72.01 The Contractor may carry on the work simultaneously at more than on point only if, in the opinion of the City or Project Engineer, such action is acceptable and is necessary to insure completion of the work within the specified time.

72.02 The Contractor's Construction Progress Schedule shall be adjusted to provide for work being simultaneously conducted at more than one point (location) at the site or sites.

ARTICLE 73. INTERFERENCE WITH EXISTING STRUCTURES

73.01 Whenever it may be necessary to cross or to interfere with existing culverts, drains, sewers, water pipes or fixtures, guard rails, fences, gas pipes or fixtures or other structures needing special care, due notice shall be given to the City or Project Engineer. Work involving these items shall be done according to the City's or Project Engineer's directions. Whenever required, all objects shall be strengthened to meet any additional stress that the work herein specified may impose upon it. Any damages that may occur shall be thoroughly repaired. If so directed by the City or Project Engineer, the location of any existing work shall be changed to meet the requirements of the proposed work, if necessary, to leave all in good working order. The entire work shall be the responsibility of the Contractor and the work shall be done at no additional expense to the City.

73.02 The Contractor shall be responsible for repairing all broken or damaged mains or utilities, property markers, monitoring wells, and other existing structures to remain, or outside the Limit of Work, during the progress of the Work. The Contractor shall repair and shall be responsible for all damages to existing utilities and structures with no additional expense to the City. The Contractor shall contact the proper utility or authority to correct or make any changes due to utility or other obstructions during the prosecution of the work, but the entire responsibility and expense shall be with the Contractor.

73.03 All damaged items of work or items required to be removed and replaced due to construction shall be replaced or repaired by the Contractor to the complete satisfaction of the City and/or utility at no additional expense to the City.

ARTICLE 74. TURF, TOPSOIL AND OTHER REPLACEMENT ITEMS

74.01 Where the construction runs through cultivated or sodded lands, the Contractor shall stockpile the turf and topsoil separately and replace the same after the excavation is filled. The Contractor shall leave the land as nearly as possible in its original condition. Trees, fences, walls, walks and other items must not be damaged.

ARTICLE 75. MATERIALS

75.01 All materials furnished and used in the completed work shall be new, of best quality, workmanship, and design and shall be recognized as standard in good construction practices. Whenever a specification number or reference is given, the subsequent amendments (if any) shall be included. The standards set forth in the selection of

materials and supplies are intended to conform to those standards adopted by the City. Preference in manufacture shall be given to familiarize the Contractor with the requirements of the Project Engineer when the occasion or choice of materials or supplies so demands.

ARTICLE 76. DEFECTIVE MATERIALS

76.01 No materials shall be laid, installed or used which are known to be, or which may be found to be, in any way defective. Notice shall be given to the Project Engineer of any defective or imperfect material. Defective or unfit material found to have been laid, installed or used shall be removed and replaced by the Contractor with unobjectionable material. This removal and replacement shall be made without additional expense to the City.

ARTICLE 77. INSPECTION AND TESTING OF FURNISHED MATERIALS

77.01 Unless herein provided otherwise, all materials furnished by the Contractor are subject to thorough inspections and tests by the Project Engineer. Any materials condemned or rejected by the Project Engineer as not conforming to the specifications may be branded or otherwise marked. Branded or marked material shall be, on demand, at once removed by the Contractor to a satisfactory distance from the site. Removed materials shall not again be brought upon or near to the work.

ARTICLE 78. SAMPLES AND ORDERING LISTS

78.01 Unless herein provided otherwise, the Contractor shall submit samples of the various materials used on the contract as required by the specifications for testing purposes. All ordering lists shall be submitted by the Contractor to the Project Engineer for approval and must be approved before the ordering of the materials.

ARTICLE 79. SANITARY CONVENIENCES

79.01 Adequate sanitary conveniences, properly secluded from public observation, for the use of workmen on the premises shall be provided and maintained by the Contractor in accordance with the requirements of local and State health authorities. These conveniences shall be maintained in such manner and at such points as shall be approved and their use shall be strictly enforced. Sanitary waste shall be treated and disposed of in a manner satisfactory to, and as directed by, the City and/or the local and State health authorities. Under no circumstances shall sanitary waste be allowed to flow on the surface of the ground or in the work area.

79.02 The cost of sanitary conveniences and the maintenance of same will not be paid for separately, but compensation will be considered to be included in the prices stipulated for the items of work as listed in the bid/proposal form.

ARTICLE 80. FINISHING AND CLEANING UP

80.01 In completing any backfilling operation, the Contractor shall replace all surface material to the satisfaction of the City. The Contractor shall then immediately remove all surplus material, all tools, and other property belonging to him. The Contractor shall leave the entire street or surrounding area free and clean, in good order and at no additional expense to the City. Backfilling and removal of surplus materials shall follow closely upon the completion of the work. The Contractor shall exercise special care in keeping rights-of-way and private and public lands, upon which work is being performed, clean and free of debris at all times. The Contractor will remove tools and other property belonging to him when they are not being used.

80.02 In case the Contractor shall fail or neglect to promptly remove all surplus materials, tools and other incidentals after backfilling, or shall neglect to do required paving promptly, the City or Project Engineer may, after 24 hours notice, cause the work to be done and the cost thereof shall be deducted form any monies then or thereafter due the Contractor.

ARTICLE 81. RIGHTS OF ACCESS

81.01 Nothing herein contained or shown on the drawings shall be construed as giving the Contractor exclusive occupancy of the work area involved. The City or any other Contractor employed by the City, the various utility companies, contractors or sub-contractors employed by Federal, state or local government agencies involved in

the general project or upon public rights-of-way, may enter upon or cross the area of work or occupy portions of it as directed or permitted. When the territory of one contract is the convenient means of access to the other, each contractor shall arrange his work in such manner as to permit such access and to prevent unnecessary delay in the work as a whole. Said access rights shall also include all Federal and state agencies and their representatives that have an interest in said project.

ARTICLE 82. WORK BY OTHERS

82.01 The City reserves the right to do any other work which may connect with, or become a part of, or be adjacent to the work embraced by this Contract, at any time, by contract work or otherwise. The Contractor shall not interfere with, nor obstruct in any way, the work of such other persons as the City may employ. The Contractor shall execute his own work in such a manner as to aid in the execution of work by others as may be required. No excavations or backfilling will be permitted if other work by the City will be affected.

ARTICLE 83. WORK WITHIN THE LIMITS OF PRIVATE PROPERTY

83.01 Particular attention is hereby directed to the fact that some of the work included under this Contract may have to be done within the limits of properties that are publicly or privately owned. The City, where necessary has, or will have, secured the necessary easements to these properties for construction purposes. The Contractor will be permitted to utilize the areas of the City's easements, subject to all of the conditions and requirements as they may affect the Contractor's operations. The Contractor shall conduct his operations and activities in the performance of the work with all such conditions and requirements as may be imposed by the City or Project Engineer.

83.02 All means and rights of ingress and egress to the work areas and all other areas required for work space, in addition to the City's easements, shall be the entire responsibility of the Contractor, All costs in connection therewith shall be considered to be included in the prices stipulated for the appropriate items of work as listed in the bid/proposal form.

83.03 The Contractor shall neither use nor occupy public or private lands outside the limits of the City's easements and rights-of-way unless written permission from the owner of the public or private lands have first been obtained. Copies of the written agreements shall be submitted to the Project Engineer prior to entering upon such lands. The Contractor shall be responsible for cooperating with, and for coordinating the prosecution of, the work of this Contract with the public and private property owner. Any abuse to the lands of the public and private property owner shall be immediately corrected by the Contractor, at the Contractor's expense, to the complete satisfaction of the property owner. The Contractor shall take such precautionary measure, as required by the City, to prevent further nuisances, interference or inconvenience to abutting property owners.

83.04 It shall be the Contractor's full responsibility to be familiar with the limitations imposed upon the work of construction within the various properties of public or private ownership and rights-of-way by existing occupancy or use. The Contractor will be required to make every effort to fully and satisfactorily protect trees, shrubs, lawns, gardens, fences, walks, driveways, structures and all and any other appurtenances of the property owners.

83.05 The Contractor shall provide adequate access to all walks, driveways, yards or structures: shall protect all work by the erection or placement of safety guards or barriers, lights and such other incidentals; and where required, shall construct temporary plank crossings or timbers to permit full use of private facilities at all times. All of these actions are to be performed at no additional expense to the City. All other applicable provisions for control of work within the areas of public travel set forth elsewhere herein shall also apply to work within the limits of private ownership.

83.06 The Contractor shall cooperate with the public and private property owners and shall also contact the City and Project Engineer for additional information regarding the requested (or required) length of time needed as a notice to be given to the public or private property owner before the Contractor enters their property to start the construction. In some cases, a certain time to start the work and a certain limited length of time may be required to complete the work on public and private property owners. Furthermore, the contactor may be required to shutdown construction operations as necessary to prevent undo interference with the operation of private and public business within the project area.

83.07 Before proceeding with construction operations, the Contractor shall provide suitable and substantial gates or other approved forms of closing gap devices in every fence within the limits of the owner's easements through which the Contractor intends to move or pass equipment and materials. It is the responsibility of the Contractor to negotiate with the owner of each fence all of that owner's requirements, in addition to those specified above. It shall also be the responsibility of the Contractor to comply with all requirements as specified herein and as agreed to with the owner's in a manner satisfactory to the owner.

83.08 No separate payment will be made for the requirements specified under "WORK WITHIN THE LIMITS OF PRIVATE PROPERTY" and all cost in conjunction therewith shall be included in the prices stipulated for the appropriate items of work as listed in the bid/proposal form.

ARTICLE 84. LOADING

84.01 No part of the structures involved in this Contract shall be loaded during construction with a load greater than that calculated for the safety of the structure. Should any accidents or damage occur through any violation of this requirement, the Contractor will be held responsible. If necessary, the Contractor shall request, in writing, the allowable loading from the Project Engineer.

ARTICLE 85. COMPLETION OF WORK

85.01 In addition to the specified or described portions, all other work and all materials, equipment and labor of whatever description which are necessary or required to complete the work, or for carrying out the full intent of the drawings and specifications, as interpreted by the Project Engineer, shall be provided by the Contractor. Payment therefore shall be considered as having been included in the prices stipulated for the appropriate items of work as listed in the bid/proposal form.

ARTICLE 86. DUST AND SPILLAGE CONTROL

86.01 The Contractor shall exercise every precaution to prevent and to control dust arising out of all construction operations from becoming a nuisance. Water shall be provided and applied as required or as ordered by the Project Engineer for allaying dust conditions. Pavements adjoining excavations shall be kept swept and/or washed clean of excess excavated material wherever and whenever directed. Earth piles adjacent to excavations, earth stockpiles and surfaces of refilled excavations shall be kept moist at all times as directed. No extra payment will be made for providing the dust control measures and for conforming to the requirements specified above. Compensation therefor shall be considered included in the prices stipulated for the appropriate items of work as listed in the bid/proposal form.

86.02 The Contractor shall take appropriate measures to control the generation of dust from its activities. Water shall be provided and applied as required or as ordered by the Project Engineer for allaying dust conditions.

86.03 All vehicles utilized by the Contractor for delivery or removal of materials shall have appropriate covers to prevent spillage of material during transit.

ARTICLE 87. CARE OF THE WORK

87.01 The Contractor shall be responsible for all damages to persons or property that occur as a result of the Contractor's fault or negligence concerning the prosecution of the work. The Contractor shall also be responsible for the proper care and protection of all material delivered and of all work performed until the issuance of a Notice of Project Acceptance by the City, whether or not the same has been covered by partial payments authorized by the Project Engineer.

ARTICLE 88. EMERGENCY WORK

88.01 The Contractor shall file, with the City Engineer and the Project Engineer, if any, the name and telephone number of a person authorized by him who may be contacted regarding emergency work at the job site that may be required during non-working hours for reasons of public safety. This person shall be readily available and shall have full Authority to deal with any emergency that may occur.

ARTICLE 89. FIRE PREVENTION AND PROTECTION

89.01. All Federal laws (Occupational Safety and Health Act) and all state and municipal rules and regulations with respect to fire prevention, fire-resistant construction and fire protection shall be strictly adhered to by the Contractor. All work and facilities necessary therefore shall be provided and maintained by the Contractor in an approved manner.

89.02. All fire protection equipment (as per 89.01 above) shall be provided by the Contractor for the protection of the contract work including temporary work and adjacent property. Personnel experienced in the operation of the fire protection equipment and apparatus shall be available whenever work is in progress and at such other times as may be necessary for the safety of the public and of the work.

89.03. Open fires will not be permitted.

ARTICLE 90. PLANIMETER

90.01 For estimating quantities, where the computations of areas by analytic and geometric methods would be comparatively laborious, it is stipulated and agreed that the planimeter shall be considered an instrument of precision adapted to the measurement of such areas, as utilized by an engineer.

ARTICLE 91. SUPERINTENDENCE

91.01 During the entire duration of the project, the Contractor shall employ a competent superintendent in personal charge of the work. The superintendent shall be present during all phases of construction and shall have full authority to act for the Contractor. The superintendent shall be continued in this capacity full time for this project unless (1) the person ceases to be on the Contractor's payroll or (2) the person proves to be unacceptable to the City or Project Engineer. Instructions given to the superintendent and/or supervisory subordinates shall be considered as given to the Contractor. A chain-of-command listing shall be submitted by the Contractor to the City and Project Engineer and shall be adhered to in the temporary absence of the superintendent.

ARTICLE 92. CONTRACT ADMINISTRATION COSTS - OUTSIDE REGULAR HOURS

92.01 The working schedule shall be confined to a five (5) day week ending on Friday. The working day shall be any eight-hour period beginning no earlier than 7:00 AM and ending no later than 7:00 PM. Whenever the Contractor elects to perform work on Saturdays, Sundays or legal holidays observed by the City or to work in excess of the normal working hours stated above, the Contractor shall pay to the City the extra cost incurred by the City due to the increased cost of contract administration. Payment shall include all cost of inspection and administration for such Saturday, Sunday or legal holiday work or for work in excess of the normal working day, which the City is obligated to incur and for the extra expense involved in overtime work resulting from the performance of work on these days.

92.02 No work outside regular hours or overtime work shall be planned or executed without the approval of the City.

ARTICLE 93. DAILY REPORTS

93.01 The Contractor shall submit daily activity reports on an approved form for the duration of the project. The report shall indicate all personnel currently employed on the work, including each trade and every subcontractor; all equipment and whether that equipment was idle for the particular day; a general description of all work accomplished and any authorized extra work (time and material reports shall be submitted on separate forms).

ARTICLE 94. MATERIAL AND WORKMANSHIP

94.01 All materials and workmanship incorporated in the work covered by this Contract are to be of the highest grade of their respective kinds for the purpose intended. The Contractor shall furnish to the Project Engineer for approval the name of the manufacturer of machinery and mechanical or other equipment that the Contractor contemplates incorporating in the project together with their respective performance capacities and other pertinent information.

94.02 When required by the Specifications, or when called for by the City or Project Engineer, the Contractor shall furnish the required information for approval of all material that the Contractor contemplates incorporating in the work. Samples of material shall be submitted for approval to the Project Engineer when and as directed. Machinery, equipment and material installed or used without approval shall be at the risk of subsequent rejection.

ARTICLE 95. TEMPORARY WATER SUPPLY

95.01 In the event temporary water supply work is required, it shall be provided in accordance with the requirements of the Waterbury Water Bureau and all local and state health authorities. The Contractor shall provide and maintain facilities for an adequate supply of water suitable for use for construction purposes and for domestic use as required for the work of this Contract. The cost of all work, materials, equipment, appurtenances and accessories necessary for providing supplies of water at the site, including the cost of all water consumed, shall be borne by the Contractor.

95.02 Upon Substantial Completion to the work of this Contract, and before Final Completion of the Project, the Contractor shall remove all temporary piping and appurtenant work used for the temporary water supply.

ARTICLE 96. FITTING AND COORDINATION OF WORK

96.01 The Contractor shall be responsible for the proper fitting of all work and for the coordination of operations of all trades, subcontractors or material suppliers engaged in the work. The Contractor shall be prepared to guarantee to each of his subcontractors the dimensions for which they may require for the fitting of their work to all surrounding work. The Contractor shall do, or shall cause his agents to do, all cutting, fitting, adjusting and patching necessary to make the several parts of the work come together satisfactorily and properly and to fit the work to receive, or to be received by, the work of other contractors.

ARTICLE 97. ARCHEOLOGICAL FINDS

97.01 During the life of this Contract, in the event that any articles such as "charcoal", "bone", "shell", "cultural objects", "fire-cracked stones", "stone flaking material." or any other such related items of historical significance are discovered on the project, the Contractor is required to notify:

(1)The City
(2) Project Engineer or Inspector

ARTICLE 98. EXCAVATIONS NEAR UNDERGROUND UTILITIES

98.01 In conformance with Section 16-345 of the Regulations of the Department of Public Utility Control, the Contractor shall not start any excavation and/or blasting of rock activity without first having ascertained the location of all such utilities in the area. The Contractor shall notify the Public Utilities Regulatory Authority (PURA) "CALL BEFORE YOU DIG" (Toll Free 1- 800-922-4455) at least two (2) full days in advance (excluding Saturday, Sunday and legal holidays), but no more than thirty (30) days before starting any such work. Such notice shall include the name, address and telephone number of the persons/agency performing the work, the date, location and type of excavation.

98.02 The PURA should immediately transmit such information to the utility companies whose facilities may be affected. Utility companies receiving notice should mark-up the locations of their facilities on the work site. If they have no facilities in the area, they shall so inform the Contractor. If the Contractor does not receive any information or marked-up locations on the work sites, the Contractor shall contact PURA again to verify that the utility companies have responded to the initial call. Under no circumstances will the Contractor be allowed to start any excavation and/or blasting work prior to obtaining all necessary information regarding the location of underground utilities at the site. It is the Contractor's responsibility to have all utilities marked on the work sites prior to starting the work.

ARTICLE 99. WATER QUALITY OF WELLS

99.01 The Contractor shall perform all tests required by the State Health Department on all water supply wells and reservoirs where directed by the City or Project Engineer before and after construction. All labor, materials and testing shall be paid by the Contractor at no cost to the City.

ARTICLE 100. WORK IN STATE HIGHWAYS

100.01 If any of the work under this Contract is in a state highway the Contractor shall obtain all required permits at his own expense. The Contractor shall perform the work in accordance with the terms and conditions stipulated by the Connecticut Department of Transportation (ConnDOT) and/or as required by ConnDOT inspectors. The Contractor must provide such bonds, security and insurance as may be required to obtain such permits.

100.02 In the event the City, or the City and the Contractor jointly, are required to obtain any permits, including detour permits, the Contractor shall be familiar with the conditions of the permits and shall be held responsible for compliance with all the requirements of the permits and all specifications attached thereto, as if the permits were held solely by the Contractor.

100.03 Whenever State inspectors, flagmen or other costs are incurred as a condition to obtaining permits, the Contractor shall be responsible for payment of these costs with no reimbursement from the City.

100.04 The Contractor shall conform to all ConnDOT requirements for materials and construction methods for all work within state highways. Sheeting or an adequate trench box may be required in all trenching operations to confine trench widths and to protect State facilities. Additional pavement replacement may be required to properly restore the roadway surface.

100.05 The cost of all labor, materials and equipment necessary to conform to CONNDOT requirements for work in, or adjacent to, state highways, including work not specifically stated in the Contract Plans and Specifications, shall be the sole responsibility of the Contractor and shall not be reimbursed by the City. Therefore, the Contractor is informed to evaluate all CONNDOT requirements for the project prior to submitting the Bid/Proposal for the project and to include these costs in his bid/proposal prices.

ARTICLE 101. EXISTING INSPECTION REPORTS

101.01 Any existing inspection reports concerning the project which have been prepared by or for the City or Project Engineer will be made available for the Contractor's information.

ARTICLE 102. TEST REPORTS; CERTIFICATES OF COMPLIANCE AND SHIPPING LISTS

102.01 Except where expressly provided otherwise in the Contract Documents, the Contractor shall furnish to the Project Engineer the material manufacturer's notarized test reports and methods of testing by an approved independent laboratory in order to show compliance of all materials furnished with all specification requirements, the reports shall also contain manufacturer's notarized certificates of conformance stating that all materials furnished under these Specifications conform with all specification requirements; that each shipment of materials shall be accompanied by the manufacturer's notarized certificate of conformance and that a shipping list itemizing the amounts of each shipment shall accompany each shipment.

ARTICLE 103. CLEANING FINISHED WORK

103.01 After the work is completed, the sewers, manholes and structures shall be carefully cleaned free of dirt, broken masonry, mortar, construction and other debris and shall be left in first class condition, ready for use. All temporary or excess material shall be disposed of and the work left broom-clean to the satisfaction of the Project Engineer.

ARTICLE 104. COMPLIANCE TO ACTS AND EXECUTIVE ORDERS

104.01 If this Contract is federally assisted and the Contractor must comply with all applicable statutes, acts, executive orders and regulations, including without limitation:

(a) **TITLE VI, CIVIL RIGHTS ACT OF 1964** Provides that no person in the United States shall on the grounds of race, color or national origin be excluded from participation in, be denied the benefits of, or be subjected to discrimination under any program or activity, receiving Federal financial assistance.

(b) **SECTION 3, HUD ACT OF 1968** Provides that, to the greatest extent feasible, opportunities for training and employment shall be given to lower income residents of HUD-assisted project areas, and that contracts for work in connection with such projects be awarded to business concerns which are located in, or are owned in substantial part by persons residing in the area of the project.

(c) **LABOR STANDARDS** Compliance with Davis Bacon Act, as amended (40 U.S.C. 267a-5) Contract Work Hours and Safety Standards Act (40 U.S.C. 327-333) 13.0.

ARTICLE 105 SEMI-FINAL INSPECTION / SUBSTANTIAL COMPLETION

105.1 Contractor shall notify the Project Engineer when it believes the work (or a portion thereof) is Substantially Complete and shall file with the City a written, notarized "Contractor's Affidavit of Substantial Completion" and request a Semi-Final Inspection of the work.

105.2 Contractor, prior to requesting Semi-Final Inspection, shall complete and submit the following, listing known exceptions in its Affidavit of Substantial Completion:

i. Include supporting documentation for Substantial Completion as indicated in these Contract Documents.
ii. Include Drafts of all documentation for Final Completion as indicated in these Contract Documents.
iii. Advise City of outstanding permit closure requirements. Submit certificates of inspections conducted, reports, and other documentation required by local or state authorities.
iv. Where required, submit photographs, specific warranties, final certifications, and similar documents.
v. Provide Partial Waiver of Lien from each Subcontractor, supplier and the Contractor. All money due to Subcontractors and suppliers may be withheld from payment to the Contractor until Waivers of Lien indicate no money owed.
vi. Drafts of all required As-Builts, Record Drawings and Documents and Surveys, in number and formats specified.

105.3 Subsequent to City's receipt of Contractor's Affidavit of Substantial Completion, Project Engineer will either proceed with Semi-Final Inspection or advise Contractor of prerequisites not fulfilled.

105.4 Following Semi-Final Inspection, Project Engineer will either inform the City to prepare a Certificate of Substantial Completion, or advise Contractor of work that must be performed prior to issuance of said certificate, and repeat the inspection when requested and assured that the work has been substantially completed in accordance with the Contract Documents.

105.5 Contractor shall submit its **Semi-Final Payment Application** coincident with, or first following the date claimed as Substantially Complete, which shall be processed in the same manner as a partial payment requisition and shall show either 100% completion for the work claimed as Substantially Complete, and/or list incomplete items, value of incompletion, and reasons for being incomplete.

ARTICLE 106. CITY'S CERTIFICATE OF SUBSTANTIAL COMPLETION

106.1 For the portion of the work determined to be Substantially Complete, the City shall issue "City's Certificate of Substantial Completion" which shall establish the date of Substantial Completion by the Contractor.

106.2 Concurrently, the Project Engineer shall prepare a list (the "punchlist") of remaining items of work to be completed and/or deficiencies to be addressed.

106.3 The City reserves the right to modify, amend and/or update the "punchlist," as it deems necessary.

ARTICLE 107. LIMITED ACCEPTANCE OF WORK

107.01 Limited Acceptance of Portion(s) of the Work shall be at City's sole discretion and shall be subsequent to issuance of City's Certificate of Substantial Completion for such work and shall relieve Contractor of responsibility for the physical aspects of said portion of the work; however such termination of responsibility for the physical aspects of the work in no way affects or diminishes any other contractual requirements governing the work so accepted, or the issuance of a Notice of Project Acceptance of the Project as whole.

107.02 Documentation of any Limited Acceptance of Portion(s) of the Work shall be evidenced by City's issuance of a Certificate of Limited Acceptance of Work for such Work.

ARTICLE 108. FINAL INSPECTION

108.01 Contractor shall notify the Project Engineer when it believes the Project is Finally Complete and shall file with the City a written, notarized "Contractor's Affidavit of Final Completion" and request a Final Inspection of the work by the Project Engineer.

108.02 Subsequent to receipt of Contractor's Affidavit of Final Completion, Project Engineer will either proceed with Final Inspection and/or advise Contractor of prerequisites not fulfilled.

108.03 At the time of submission of its Affidavit of Final Completion, Contractor, as required by the Contract Documents and/or required for completion of the Project as determined by the City, shall also provide and/or submit the following:

i. Supporting documentation required by the Contract Documents not previously submitted and accepted.
ii. Discontinue and remove, as appropriate, temporary facilities and services, along with construction tools and facilities, and similar elements.
iii. A copy of City's final punch list of itemized work to be completed or corrected, stating that each item has been completed or otherwise resolved for acceptance, endorsed and dated by the Project Engineer.
iv. Final and complete versions of all required As-Builts, Record Drawings and Documents and Surveys, in number and formats specified.
v. Provide Final Waiver of Lien from each Subcontractor, supplier and the Contractor. All money due to Subcontractors and suppliers shall be withheld from payment to the Contractor until Waivers of Lien indicate no money owed.

108.04 Following Final Inspection, Project Engineer either informs advises Contractor of work that must still be performed, etc., and the process repeats or advises the City that that the Project is Finally Complete.

ARTICLE 109. FINAL CHANGE ORDER

109.01. Upon determination that Final Completion has been reached, the City shall, if necessary, prepare a **Final Change Order.** The **"Final Change Order"** shall show the total due Contractor under the Contract, including a final estimate of all quantities. Should there be a decrease in quantities, then such variations will be computed at the unit prices in the bid/proposal form and reflected in the **Final Change Order** by adding or deducting said amounts from the from the gross sum, as applicable.

109.02 The **Final Change Order** shall reflect the final Contract Amount, all prior City payments to the Contractor, all adjustments to the Contract Amount, all retainage held by the City, any liquidated damage amounts, all unused amounts of any Owner Controlled Allowances and of all Cash Allowances, all adjustments for Alternates accepted/declined by the City and final amount of any holdback(s) by the City.

109.03 All certificates of payments and estimates, upon which partial payments may have been made being merely estimates, shall be subject to correction by this **Final Change Order**.

109.04 Contractor shall execute the Final Change Order upon issuance by the City.

109.05 All Contractor's subsequent payment requisitions shall reflect the amounts and qualities set forth in the Final Change Order.

ARTICLE 110. FINAL PAYMENT APPLICATION

110.01 Based upon the amounts and qualities set forth in the Contract Documents, as may be revised by the Final Change Order, the Contractor shall submit its Final Payment Application requesting Final Payment due under the Contract, including all retainage held by the City.

110.02 All prior estimates and City payments, including those relating to extra or additional work, retainage(s), and holdback(s), shall be subject to correction by this Final Payment.

110.02 This Final Payment Application shall be certified as to its correctness by the Project Engineer and will be processed in the same manner as the partial payment requests.

ARTICLE 111. FINAL COMPLETION / CITY'S CERTIFICATE OF FINAL COMPLETION / NOTICE OF PROJECT ACCEPTANCE

111.01 Final Completion and Project Acceptance shall occur when:

i. All Project work and services have been completed and all required documentation/paperwork has been submitted in accordance with the Contract Documents.

ii. Contractor's **Final Payment Application** has been submitted, certified as to correctness by the Project Engineer, and submitted for processing of Final Payment.

iii. Upon written determination by Project Engineer that items (i) and (ii) above are complete, the City shall issue its **Certificate of Final Completion and Notice of Project Acceptance** to Contractor, establishing therein the date of Final Completion.

ARTICLE 112. ACCEPTANCE OF FINAL PAYMENT

112.01 The acceptance by the Contractor, or by anyone claiming by or through the Contractor, of Final Payment shall constitute and operate as a release for the City from any and all claims of any liability to the Contractor for anything, theretofore done or furnished for or relating to or arising out of the work done thereunder, and for any prior act of neglect, default on the part of the City or any of its officers, agents, or employees unless the Contactor serves a detailed and verified statement of claim upon the City not later than forty (40) consecutive calendar days after mailing of such Final Payment. Such statement shall specify the items claimed. Should the Contractor refuse to accept the Final Payment as tendered, it shall constitute a waiver of any right of interest thereon.

ARTICLE 113. 10-HOUR OSHA CONSTRUCTION SAFETY AND HEALTH COURSE

113.01 The Contractor, or any subcontractors working on the project, shall provide written proof that any and all employees working on the project jobsite have successfully completed the 10-Hour OSHA Construction Safety and Health Course.

END OF SECTION

Attachment B-1

NON-DISCRIMINATION CONTRACT LANGUAGE

Pursuant to Connecticut General Statutes Section 4a-60 and except as provided in section 10a-151i of the General Statutes, every contract to which a state agency or political subdivision of the state, including a municipality or quasi-public agency, is a party to shall contain the following provisions:

(1) The contractor agrees and warrants that in the performance of the contract such contractor will not discriminate or permit discrimination against any person or group of persons on the grounds of race, color, religious creed, age, marital status, national origin, ancestry, sex, sexual orientation, gender identity or expression, status as a veteran, status as a victim of domestic violence, status as a victim of sexual assault or status as a victim of trafficking in persons, intellectual disability, mental disability or physical disability, including, but not limited to, blindness, unless it is shown by such contractor that such disability prevents performance of the work involved, in any manner prohibited by the laws of the United States or of the state of Connecticut; and the contractor further agrees to take affirmative action to ensure that applicants with job-related qualifications are employed and that employees are treated when employed without regard to their race, color, religious creed, age, marital status, national origin, ancestry, sex, gender identity or expression, sexual orientation, status as a veteran, status as a victim of domestic violence, status as a victim of sexual assault or status as a victim of trafficking in persons, intellectual disability, mental disability or physical disability, including, but not limited to, blindness, unless it is shown by such contractor that such disability prevents performance of the work involved;

(2) The contractor agrees, in all solicitations or advertisements for employees placed by or on behalf of the contractor, to state that it is an "affirmative action-equal opportunity employer" in accordance with regulations adopted by the Commission on Human Rights and Opportunities;

(3) The contractor agrees to provide each labor union or representative of workers with which such contractor has a collective bargaining agreement or other contract or understanding and each vendor with which such contractor has a contract or understanding, a notice to be provided by the Commission on Human Rights and Opportunities advising the labor union or workers' representative of the contractor's commitments under this section, and to post copies of the notice in conspicuous places available to employees and applicants for employment;

(4) The contractor agrees to comply with each provision of this section and sections 46a-68e and 46a-68f and with each regulation or relevant order issued by said commission pursuant to sections 46a-56, 46a-68e, 46a-68f and 46a-86; and

(5) The contractor agrees to provide the Commission on Human Rights and Opportunities with such information requested by the commission, and permit access to pertinent books, records and accounts, concerning the employment practices and procedures of the contractor as relate to the provisions of this section and section 46a-56.

City of Waterbury
Department of Public Works

Memorandum

To: Board of Aldermen

From: Mark Lombardo, Deputy Director of Public Works M.L

Date: October 6, 2026

Re: **Board of Aldermen Approval Request / DPW Executive Summary** – On Call Tree Service Agreement between the City of Waterbury and Paulo Landscaping & Tree Removal, LLC; RFP 8890

The Department of Public Works, requests your approval of the above-referenced agreement between the City of Waterbury and Paulo Landscaping & Tree Removal, LLC.

There were four proposals that responded to RFP 8890 that were received by DPW. The four proposals were from Cipully Tree Service, LLC, Paulo Landscaping & Tree Removal, LLC, Hillview Property Maintenance and J&J Brothers, LLC. A selection committee was formed to review each of the respondent's experience, expertise and value-added services. Committee members were Mark Lombardo, Deputy Director, John Kollar, Supervisor of Parks and Chris Mauro, Golf Course Superintendent.

The selection committee met to complete the evaluation process and make a selection. The Selection Committee voted unanimously to award an On Call Tree Services Agreement to Paulo Landscaping & Tree Removal, LLC.

Under this agreement, Paulo Landscaping & Tree Removal, LLC will provide and perform maintenance as needed by the City of Waterbury. This is a one-year agreement and as an On-Call Agreement, there is no cost to the City associated with entering into the agreement. Costs will be as identified in any issued Task Orders and Purchase Orders in accordance with the On-Call Agreement.

All services requested under this agreement will be authorized through Task Orders and Purchase Orders following the rates and fees set forth in Contractor's Price Proposal, which has been incorporated into the agreement as part of Attachment A (see attached agreement). Each Task Order will set out, on a project by process basis, the desired scope of work, monetary terms and time of performance for such work, plus all other pertinent project specific information.

Included herewith is the *Disclosure and Certification of Obligations Affidavit Regarding Outstanding Obligations to the City of Waterbury* submitted by Paulo Landscaping & Tree Removal, LLC in connection with this project and a copy of the Tax Clearance issued by the Office of Tax Collections.

Accordingly, attached are five (5) copies of the proposed contract for your review and consideration, plus one (1) copy to serve as 'record copy' for the City Clerk's Office.

Thank you.

cc. Attorney Lynn McHale, Staff Attorney, Office of the Corporation Counsel

MAINTENANCE SERVICES AGREEMENT
RFP No. 8890
for
ON-CALL TREE SERVICES
between
The City of Waterbury, Connecticut
and
Paulo Landscaping & Tree Removal LLC

THIS AGREEMENT, effective on the date signed by the Mayor, is by and between the CITY OF WATERBURY, City Hall, 235 Grand Street, Waterbury, Connecticut 06702 (the "City") and Paulo Landscaping & Tree Removal LLC, located at 235 OLD TAVERN RD, ORANGE, CT 06477, a State of Connecticut duly registered domestic limited liability company (the "Contractor").

WHEREAS, the Contractor submitted a proposal to the City responding to **Request for Proposal ("RFP") Number 8890 for ON-CALL TREE SERVICES**; and

WHEREAS, the City accepted the Contractor's proposal for **RFP No. 8890**; and

WHEREAS, the City desires to obtain the Contractor's services pursuant to the terms, conditions and provisions set forth in this agreement (the "Project").

NOW THEREFORE, THE PARTIES AGREE AND COVENANT AS FOLLOWS:

1. Scope of Services. The Contractor shall furnish all of the labor, services, equipment, materials, supplies, transportation, and incidentals necessary to complete the Project as specified in this agreement (also referred to herein as "Contract") and such shall be completed in a satisfactory manner, as reasonably determined by the City. All labor, services, equipment, materials, supplies, transportation, and incidentals shall comply with **(i)** any and all applicable local, state and federal laws, statutes, ordinances, rules and regulations, including without limitation all notice requirements thereunder, and **(ii)** generally accepted professional standards.

1.1. The Project consists of **ON-CALL TREE SERVICES** as detailed and further described in the proposal documents in **Attachment A** and are hereby made material provisions of this Contract. **Attachment A** shall consist of the following, which are attached hereto, are acknowledged by the Contractor as having been received, or otherwise hereby incorporated by reference as noted below, and all are made a part hereof:

1.1.1 RFP Number 8890 (acknowledged by the Contractor as having been received and incorporated by reference);

1.1.2 **Addendum #1 to RFP Number 8890**, dated August 25, 2026 and consisting of 8 pages (attached hereto);

1.1.3 Contractor's Proposal, consisting of 23 pages, submitted in response to **RFP Number 8890**, and Contractor's Price Proposal, dated August 18, 2026 (signed August 24, 2026) and consisting of 3 pages (all attached hereto);

1.1.4 Certificates of Insurance (attached hereto);

1.1.5 Performance Bond and Payment Bond (incorporated by reference);

1.1.6 Special Conditions (Article 1 – Article 22) consisting of 6 pages (attached hereto);

1.1.7 General Conditions (Article 1 – Article 113) consisting of 35 pages (attached hereto);

1.1.8 Scope of Work, RFP Attachment E, consisting of 3 pages (attached hereto);

1.1.9 Annual Statement of Financial Interests; Disclosure and Affidavit Re: Outstanding Obligations to the City; Debarment Certification; Corporate Resolution, Non-Collusion Affidavit (incorporated by reference);

1.1.10 Any and all amendment(s) and Change Orders issued by the City after execution of Contract (incorporated by reference);

1.1.11 All applicable Federal, State and local statutes, regulations, charter and ordinances (incorporated by reference); and

1.1.12 All permits (including, but not limited to, City of Waterbury Building permit(s)) and licenses (incorporated by reference).

1.2. The entirety of **Attachment A, Attachment B-1,** plus this executed instrument are together deemed the Contract Documents (hereinafter collectively referred to as "Contract Documents"). The City's record copy of the Contract Documents shall control and shall be effective and binding on the Contractor. In the event that any provision in the Contract Documents conflict with any other provision therein, the provision in the component part of the Contract Document first enumerated below shall govern over any other component part which follows it numerically.

1.2.1 Federal, State, and local laws, regulations, charter and ordinances
1.2.2 Contract Amendment(s) and Change Orders
1.2.3 Contract
1.2.4 Contractor's response to **RFP Number 8890** and Contractor's Price Proposal
1.2.5 Special Conditions
1.2.6 General Conditions
1.2.7 Scope of Work

1.3. Task Order Development. The parties hereto agree that the City, through its Using Agency (i.e., City Department), may request from the Contractor at any time during the term of this Agreement a proposal to perform services pertaining to **On-Call Tree Service** that shall be completed within the Contract Time of this Agreement and as further provided in the applicable Task Order(s) and agreed to by the Contractor. The Using Agency shall issue for the Contractor's review, comment and approval a Task Order that:

1.3.1 assigns a Task Order number;
1.3.2 provides a general description of the Task Order project;
1.3.3 provides the time by which all work under the Task Order shall be completed;
1.3.4 proposes a not to exceed cost to perform all work under the Task Order with compensation being based upon the hourly rates provided in the Contractor's response to the City's **RFP Number 8890**;

1.4 The parties hereto agree that no work shall commence under a Task Order until and unless it has been fully executed by the Contractor (through its Project Manager) and by the City (through the Department Head of the Using Agency) and a City Purchase Order for said work has been issued.

1.5 Task Order Process. The parties hereto agree that for all Task Orders approved in writing by the City's Using Agency:

1.5.1 The Using Agency shall process a requisition with the City's Finance Department for each specific Task Order;
1.5.2 The Using Agency shall not issue a Notice to Proceed with the Task Order work to the Contractor until and unless the City issues a Purchase Order for such work; and
1.5.3 The Contractor shall provide invoices to the Using Agency on a monthly basis for services rendered under each Task Order during the period in question and shall include therewith a narrative detailing the services rendered during the period in question and any further information requested by the Using Agency.

2. Representations Regarding Qualification and Accreditation. The Contractor represents that its employees are licensed to perform the scope of work set forth in this Contract. The Contractor further represents that its employees have the requisite skill, expertise and knowledge necessary to perform the scope of work required under the terms of this Contract, including any supplementary work and the City relies upon these.

2.1. Representations regarding Personnel. The Contractor represents that it has, or will secure at its own expense, all personnel required to perform the services under this Contract. Such personnel shall not be employees of or have any contractual relationship with the City, unless use of City employees or of personnel having a contractual relationship with the City is approved in writing. As set forth above, all the services required hereunder shall be performed by the Contractor or under its supervision and all personnel engaged in the work shall be fully qualified and shall be authorized or permitted under state or local law to perform such services.

2.2. Representations regarding Qualifications. The Contractor hereby represents that, to the extent required by Federal, State and Local statutes, regulations, codes, ordinances, and policies, that the Contractor and/or its employees be licensed, certified, registered, or otherwise qualified, the Contractor and all employees providing services under this Contract, are in full compliance with those statutes, regulations and ordinances. Upon City request, the Contractor shall provide to the City a copy of the Contractor's licenses, certifications, registrations, etc.

3. Responsibilities of the Contractor. All data, information, etc. given by the City to the Contractor and/or created by the Contractor shall be treated by the Contractor as proprietary to the City and confidential unless the City agrees in writing to the contrary and shall be used solely for the purposes of providing services under this agreement. The Contractor agrees to forever hold in confidence all files, records, documents and other information which may come into the Contractor's possession during the term of this agreement, except where a disclosure is expressly stated as a requirement of this agreement. Notwithstanding the foregoing, where a Contractor disclosure is required to comply with statute, regulation, or court order, the Contractor shall provide prior advance written notice to the City of the need for such disclosure. The Contractor agrees to properly implement the services required in the manner herein provided. The Contractor shall, in addition to any other responsibilities set forth in this Contract and the Schedules and Attachments hereto, perform the following coincident with the performance of this Contract:

3.1. Use of City Property. To the extent the Contractor is required to be on City property to render its services hereunder, the Contractor shall have access to such areas of City property as the City and the Contractor agree are necessary for the performance of the Contractor's services under this agreement (the "Site" or the "Premises") and at such times as the City and the Contractor may mutually agree.

3.2. Working Hours. Contractor's Working hours shall be 24 hours/7 days a week as needed by the City.

3.3. Cleaning Up. To the extent the Contractor is required to be on City property to render its services hereunder, the Contractor shall at all times keep the premises free from accumulation of waste materials or rubbish caused by Contractor, its employees or subcontractors, and at the completion of the work shall remove all rubbish from and about the project and all tools, scaffolding and surplus materials and shall leave the Premises "broom clean" or its equivalent, unless more exactly specified. In case of dispute, the City may remove the rubbish and charge the cost to the Contractor.

3.4. Publicity. Contractor agrees not to deliberately disclose the fact that the City has entered into or terminated this Contract or disclose any of the terms of the Contract or use the City's name in connection with any publicity, unless the City gives prior written consent to such use of the City's name in each instance.

3.5. Standard of Performance. All labor, services, equipment, materials, reports, plans, specifications, drawings, deliverables, incidentals, etc., either at the Premises or intended for it, shall conform in all respects with the requirements of this agreement, and shall be the best obtainable from the crafts and trades. In all cases, the labor, services, equipment, materials, reports, plans, specifications, drawings, deliverables, incidentals, etc. shall be equal to or better than the grade specified, and the best of their kind that is obtainable for the purpose for which they are intended.

3.5.1 The standard of care and skill for all services performed by the Contractor shall be that standard of care and skill ordinarily used by other members of the Contractor's profession practicing under the same or similar conditions at the same time and in the same locality. The Contractor's services rendered hereunder shall be rendered completely and by qualified personnel in accordance with standard industry practice.

3.6. Contractor's Employees. The Contractor shall at all times enforce strict discipline and good order among its employees, and shall not employ any unfit person or anyone not skilled in the work assigned.

3.7. Due Diligence Obligation. The Contractor acknowledges its responsibilities to examine and to be thoroughly familiar with the City's RFP documents, including, but not limited to the specifications, and any addenda thereto. The Contractor hereby warrants and represents that prior to the submission of its proposal during the RFP process, it reviewed or was afforded opportunity, by the City, to review all physical items, facilities, services or functions essential to the satisfactory performance of the services required ("Due Diligence") and thereby certifies that all such items facilities, services or functions are included in this agreement and thereby warrants that:

3.7.1 it conducted or had opportunity to conduct all Due Diligence prior to the submission of its proposal and, accordingly, any additional costs, services or products resulting from the failure of the Contractor to complete Due Diligence

prior to submission of its proposal shall be borne by the Contractor. Furthermore the Contractor had the opportunity during the RFP process to ask questions it saw fit and to review the responses from the City;

3.7.2 its failure or omission to make investigation and verification of data shall, in no way, be cause for future claim of ignorance of such data or conditions nor shall such failure to investigate and verify be the basis for any claim whatsoever, monetary or otherwise;

3.7.3 it is solely responsible for resolving any issues resulting from the failure to conduct Due Diligence and shall assume any costs that may result during the implementation of the Project, including, but not limited to, adherence to specifications and pricing for the Project.

3.7.4 it was responsible for specifying any changes and disclosing any new costs prior to the submittal of its proposal. Thus, in the event any changes or costs are disclosed by the Contractor, or otherwise required, during the performance of its services, the sole responsibility for any modification, delay and cost of such changes shall reside with the Contractor.

3.7.5 has familiarized itself with the nature and extent of the Contract Documents, Work, locality, and with all local conditions and Federal, State and Local laws, ordinances, rules and regulations that in any manner may affect cost, progress or performance of the Work;

3.7.6 has given the City written notice of any conflict, error or discrepancy that the Contractor has discovered in the City's RFP documents and other documents for **RFP Number 8890** (collectively "Proposal Documents"); and

3.7.7 agrees that the Proposal Documents are sufficient in scope and detail to indicate and convey understanding of all terms and conditions for performance of the Work.

3.8. Safety. Contractor shall perform all work in full compliance with Local, State and Federal health and safety regulations. All work hereunder shall be performed in a safe manner. Contractor shall immediately correct any dangerous condition caused by or resulting from its work. If it fails to correct, or to act diligently to correct, any condition which City reasonably believes to be a hazard to persons or property, then immediately upon oral or written notice to any supervisory or similar personnel of Contractor, City may, but shall not be required to, correct same at Contractor's expense. City shall confirm in writing any oral notice given within five (5) days thereafter.

3.9. Permits and Licenses. Unless expressly stated to the contrary in Section 1 of this Contract and **Attachment A**, the Contractor shall secure and obtain all permits and all licenses required, or necessary, or prudent for the performance of the Contractor's

obligations under this Contract and for the City's occupancy, use, and operation of the Project.

3.10. Manufacturer's Directions. Where it is required in this Contract that materials, products, processes, equipment or the like be installed or applied in accord with manufacturer's directions, specifications or instructions, it shall be construed to mean that the said application or installation by the Contractor shall be in strict accord with printed instructions furnished by the manufacturer of the material concerned for use under conditions similar to those at the Project site. Except as may be otherwise required in Attachment A, one (1) copy of such instructions shall be furnished to the City.

3.11. Review by the City. The Contractor shall permit the City and the City's duly authorized representatives and agents to review, at any time, all work performed under the terms of this Contract at any stage of the Project.

3.12. Records Maintenance. The Contractor shall maintain or cause to be maintained complete records documenting compliance with its obligations under the Connecticut General Statutes, the regulations of the Commission on Human Rights and Opportunities, and this Contract, including records of good-faith-efforts, subcontractor solicitations, bids received, awards, payments, documents relative to charges, costs, expenses fees, alleged breaches of contract, settlement of claims or other matters pertaining to the Contractor's demand for payment, workforce information, certifications, correspondence and filings with the Commission on Human Rights and Opportunities, for the period required by applicable law and regulations of the Commission on Human Rights and Opportunities.

3.13. Reporting Requirement. The Contractor shall deliver periodic, written reports to the City's Using Agency setting forth **(i)** the issue date of the report, **(ii)** the time period covered by the report, **(iii)** a brief description of the work and services completed by the Contractor and/or delivered by the Contractor during the time period covered by the report, **(iv)** expressed as a percentage of the total work and services required under this contract, the percentage of the total work represented by the work and services described in subsection iii above, **(v)** expressed as a percentage of this contract's Section 6 total compensation, the percentage of the total compensation represented by the work and services described in subsection iii above, **(vi)** the Contractor's declaration as to whether the entirety of the Contractor's work and services required in this Contract will be, or will not be, completed within the Contract's Section 6 total compensation amount, and **(vii)** any and all additional useful and/or relevant information. Each report shall be signed by a duly authorized employee of the Contractor.

NOTE: the Contractor's failure to deliver any report required herein shall be deemed a material breach of this Contract, the City hereby reserving the right to exercise all available legal remedy(ies) to address said breach.

3.14. FUNDING REQUIREMENTS. The Contractor is hereby put on notice that this Contract may be considered a public works contract, is anticipated to be funded in whole or in part by State of Connecticut Local Capital Improvement Program ("LoCIP") and/or TOWN AID ROAD PROGRAM (TAR) funds, and Contractor shall comply with all LoCIP and TAR requirements, including but not limited to State of Connecticut Set-Aside requirements (See Section 12 of this Contract), Commission on Human Rights and Opportunities (CHRO) requirements (See Section 13 of this Contract), as may be applicable, and **Attachment B-1** "Non-Discrimination Contract Language", dated REV.07012026, attached hereto and incorporated herein.

4. Responsibilities of the City. Upon the City's receipt of the Contractor's written request, the City will provide the Contractor with documents, data and other materials the City agrees are necessary and appropriate to the services to be performed by the Contractor hereunder and the City will endeavor to secure, where feasible and where the City agrees it is necessary and appropriate, materials or information from other sources requested by the Contractor for the purpose of carrying out the services under this Contract.

4.1. The City may, in its sole discretion, designate person(s) to act as the City's Project Engineer(s) and/or Manager(s) and the City may, in its sole discretion, define such person(s) authority and responsibilities.

4.2. The City reserves the right to **(i)** perform work related or unrelated to the Project with the City's own forces adjoining, adjacent to, or in the vicinity of, the Project site and/or **(ii)** let separate contracts related or unrelated to the Project for work and services adjoining, adjacent to, or in the vicinity of, the Project site. In such event, the Contractor shall afford all such parties reasonable opportunity for storage of materials and equipment and for the uninterrupted provision and delivery of such parties' work and/or services. The Contractor shall cooperate with such parties and in the case of a dispute, the decision of the City shall be complied with by all.

5. Contract Time. The Contractor shall reach Final Completion of all work and services required under this contract within **Three Hundred Sixty-Five (365) consecutive calendar days** of the City's written Notice to Proceed ("Contract Time").

5.1. On a monthly basis, the Contractor shall deliver to the City a written status report setting forth an analysis and critique of the Contractor's compliance with said schedule.

5.2. Delay Damages. Time is and shall be of the essence for all Project milestones, the Substantial Completion Date and the Final Completion Date for the Project. The Contractor further agrees that the Project shall be prosecuted regularly, diligently and uninterruptedly and at such rate of progress as will insure full completion thereof within the Contract Time stated above. It is expressly understood and agreed, by and between the Contractor and City, that the Contract Time is reasonable for the completion of the Project.

5.2.1. The Contractor shall pay to the City the sum of the greater of **ONE HUNDRED DOLLARS AND ZERO CENTS ($100.00)** per calendar day for each and every calendar day for which the Contractor is in default in completing the work beyond the Final Completion Date, Substantial Completion Date, Milestones and Phase Completion Dates, as set forth in Section 5, or the actual damages incurred by the City caused by the delay. The preceding sum is hereby agreed upon not as a penalty, but as delay damages for the delay that the City shall suffer due to such default.

5.2.2. The City shall have the right to recover all damages pursuant to any remedy at law or equity including but not limited to deducting the amount of any such damages from any monies due the Contractor under this Contract. The Contractor understands that if the entire Work or of any portion of the Work that the City has agreed to accept separately, if any, is not attained by the applicable completion dates as set forth in the entire Section 5, the City will suffer damages, which are difficult to specify accurately and ascertain. Delay damages based upon delay shall be assessed to compensate the City for all actual loss sustained by the delay, including, but not limited to, loss of use, increased cost of material or services to complete the project, loss of State funding, all other actual expense, and all other damages allowed by law, including attorney's fees.

5.3 No Damage for Delay. In no event shall the Contractor be entitled to any compensation or recovery of any damages in connection with any Delay, including, without limitation, consequential damages, lost opportunity damages, attorney's fees or other, similar remuneration. The City's exercise of any of its rights or remedies under the Contract Documents, including without limitation, ordering changes in the Work, or directing suspension, rescheduling or correction of the Work, regardless of the extent or frequency of the City's exercise of these rights has been contemplated by the parties and shall not be construed as an exception.

6. Compensation. The City shall compensate the Contractor for satisfactory provision of all of the goods and services set forth in this Contract as follows in this Section 6. No claims for additional compensation will be considered for conditions made known to the Contractor prior to bidding. No claims for additional compensation will be considered on account of failure of the Contractor to completely inform itself as required herein above.

6.1. Fee Schedule. The fee payable to the Contractor shall be in accordance with the Contractor's response to **RFP No. 8890**, and Contractor's Price Proposal, dated August 18, 2026 (signed August 24, 2026), and all applicable fully executed Task Orders and issued Purchase Orders.

6.2. Limitation of Payment. Compensation to the Contractor is limited to those fees set forth in Section 6.1. above and is further limited to work **(i)** performed in fact, **(ii)** conforming with this Contract, and **(iii)** accepted in writing by a duly authorized City employee. Such compensation shall be paid by the City upon its review and approval of

the Contractor's invoices for payment and review of the Contractor's work, services, reports, plans, specifications, deliverables, etc. rendered and the compensation sought therefore in a form and with detail and clarity acceptable to the City.

6.2.1 Funding. In the event this Contract is funded, in whole or in part, by Federal and/or State monies, grants, loans, etc, all City payment(s) shall fully comply with all relevant Federal and State statutes and regulations. In the event this Contract is 100% funded by Federal and/or State monies, grants, loans, etc., the aggregate sum of all City payments shall not exceed the aggregate sum of such funding.

6.2.2 The Contractor and its affiliates are hereby provided with notice that the City reserves the right, in the City's sole discretion, to offset, withhold, or otherwise reduce City payment(s) to the Contractor, in an amount equaling the sum or sums of money the Contractor and/or its affiliates is/are, or become delinquent or in arrears on, regarding the Vendor's and/or its affiliates real and personal property taxes and other payment obligations to the City.

6.2.3 No Payment for Lost Profits. In no event shall the City be obligated to pay or otherwise compensate the Contractor for any lost or expected future profits.

6.2.4 Retainage. At the City's sole discretion, it hereby reserves the right to withhold as retainage five percent (5.0 %) of any payment (or monetary sum otherwise required by law) owed to the Contractor to be withheld from payments to the Contractor otherwise payable to the Contractor until such time as the Contractor's work and services to be provided under this Contact are fully completed and accepted in writing by the City. The retainage does not does not include additional sums that the City may withhold due to the Contractor's failure to comply with provisions of this Contract.

6.2.4.1 On public works contracts valued at one million dollars or more or for projects for which a construction manager has entered into a public works contract providing for a guaranteed maximum price valued at one hundred fifty thousand dollars or more, C.G.S. § 46a-68e requires that the awarding agency "shall withhold two percent of the total contract price per month from any payment made to such contractor until such time as the contractor has submitted all compliance reports required by the Commission." The term "awarding agency" is defined by C.G.S. § 4a-60g as "a state agency or political subdivision of the state, including a municipality or quasi-public agency.

6.2.4.2 Contractor is hereby put on notice that CHRO's written approval is required prior to the City releasing withheld retainage per Section 6.2.4.1.

6.2.4.3 The two percent (2.0 %) provided in Section 6.2.4.1 is part of the five percent (5.0 %) retainage provided in Section 6.2.4, not in addition to such retainage.

6.3. Review of Work. The Contractor shall permit the City to review, at any time, all work performed under the terms of this Contract at any stage of the work. The Contractor shall maintain or cause to be maintained all records, books or other documents relative to charges, costs, expenses, fees, alleged breaches of the agreement, settlement of claims or any other matter pertaining to the Contractor's demand for payment. The City shall not certify fees for payment to the Contractor until the City has determined that the Contractor has completed the work in accordance with the requirements of this Contract.

6.4. Proposal Costs. All costs of the Contractor in preparing its proposal for **RFP No. 8890** shall be solely borne by the Contractor and are not included in the compensation to be paid by the City to the Contractor under this Contract or any other agreement.

6.5. Payment for Services, Materials, Appliances, Employees. The Contractor shall be responsible to the City for the suitability of services, materials and equipment furnished to comply fully with the requirements set forth in this Contract. The Contractor shall promptly pay all employees as their pay falls due, shall pay promptly as they fall due all bills for subcontractors, materials, supplies and services going into the work, and all bills for insurance, bonds, Worker's Compensation coverage, Federal and State Unemployment Compensation, and Social Security charges applicable to this Project. Before final City payment is made, the Contractor shall furnish to the City a sworn, notarized, affidavit stating that all of the foregoing payment obligations have been fully completed.

6.6. Liens. Neither the City's final payment nor any part of the retained percentage, if any, shall become due until the Contractorshall deliver to the City a complete release of all liens arising out of this Contract, or receipts in full in lieu thereof, and, in either case, an affidavit that so far as the Contractor has knowledge or information, the releases and receipts include all the labor and material for which a lien could be filed; but the Contractor may, if any subcontractor refuses to furnish a release or receipt in full, furnish a bond satisfactory to the City, to indemnify it against any lien. If any lien remains unsatisfied after all payments are made, the Contractor shall refund to the City all moneys that the City may be compelled to pay in discharging such a lien, including all costs and a reasonable attorney's fee.

6.7. No Payment for Lost Profits. In no event shall the City be obligated to pay or otherwise compensate the Contractor for any lost or expected future profits.

7. Warranty of the Contractor. Contractor warrants to the City that all materials, supplies, components, equipment, etc. furnished under this Contract shall be new and of good

quality, except as otherwise expressly stated and permitted by the City elsewhere in this Contract. The Contractor warrants that none of its work shall be defective. The Contractor shall be liable to repair and install and/or replace without charge any service, component, equipment or part thereof which is defective or does not conform with this Contract within the greater of (i) **three hundred sixty-five (365)** calendar days after the City delivers its written notice of its acceptance of the Project and statement therein establishing the final completion date, or (ii) that time period or date expressly stated elsewhere in this Contract or **Attachment A.**

7.1. The Contractor further warrants that all materials, supplies, services, components, equipment, reports, plans, drawings, deliverables, incidentals, etc., shall be free from any and all defects caused by faulty design, faulty material or poor workmanship. The Contractor shall supply to the City copies of any written manufacturer's warranties and guarantees. The Contractor's foregoing warranty obligations are in addition to, and not a limitation of, all manufacturer's warranties and guarantees, and any other remedy stated in this contract or otherwise available to the City under applicable law.

8. Passing of Title and Risk of Loss.

8.1. City beneficial use of Project equipment, materials, site-work, etc. prior to the Contractor's final completion of the Project or prior to the City's final payment for the Project shall neither act to vest title in the City nor act to transfer risk of loss from the Contractor to the City. Said title and risk shall pass to the City upon the City's final payment for the Project.

8.2. Contractor and its insurer shall assume the risks of loss or damage to the equipment up to and including the date title passes, except that City shall be responsible for loss or damage caused by City's gross negligence.

8.3. After Project equipment, materials, etc. are delivered to the Project work-site and become operable or functional, the Contractor shall not thereafter remove any such equipment, materials, etc. from the Project work-site without securing the prior written consent of an authorized City Using Agency employee.

9. Indemnification.

9.1. The Contractor shall indemnify, defend, and hold harmless the City, City's Boards, and Board of Education, commissions, agents, officials and employees from and against all claims, suits, damages, losses, judgments, costs and expenses including attorney's fees arising out of or resulting from the delivery of the labor, services, equipment, materials, reports, plans, specifications, design, drawings, deliverables, incidentals, etc. provided that any such claims, suits, damages, losses, judgments, costs or expenses **(i)** are attributable to bodily injury, sickness, disease or death, or to injury to or destruction of tangible property, including the loss of use resulting there from, **(ii)** are alleged to be caused in whole or in part by any willful, intentional, negligent, or reckless

act or omission of the Contractor, its employees, any subcontractor or consultant, anyone directly or indirectly employed by any of them or anyone for whose acts any of them may be liable, regardless of whether or not it is caused in part by a party indemnified hereunder; **(iii)** enforcement action or any claim for breach of the Contractor 's duties hereunder or **(iv)** claim for intangible loss(es) including but not limited to business losses, lost profits or revenue, regardless of whether or not it is caused in part by a party indemnified hereunder.

9.2. In any and all claims against the City, Board of Education or any of City's boards, agents, employees or officers by the Contractor or any employee of the Contractor, any subcontractor or consultant, anyone directly or indirectly employed by any of them or anyone for whose acts any of them may be liable, the indemnification obligation under Paragraph 9 above, shall not be limited in any way by any limitation on the amount or type of damages, compensation or benefits payable by or for the Contractor or any subcontractor under Worker's Compensation Acts, disability benefit acts or other employee benefit acts.

9.3. The Contractor understands and agrees that any insurance required by this Contract, or otherwise provided by the Contractor, shall in no way limit the responsibility to indemnify, defend, keep and hold harmless the City, the Board of Education, any of City's boards, agents, employees as provided in this Contract.

9.4. The Contractor expressly understands and agrees that any performance bond or insurance protection required by this Contract, or otherwise provided by the Contractor, shall in no way limit the responsibility to indemnify, keep and save harmless and defend the City and the City's boards, agents, employees or officers as provided herein.

9.5. Royalties and Patents. The Contractor shall, for all time, secure to the City the free and undisputed right to the use of any and all patented articles and methods used in the work and shall defend at Contractor's own expense any and all suits for infringement or alleged infringement of such patents, and in the event of adverse award under patent suits, the Contractor shall pay such awards and hold the City harmless in connection with any patent suits that may arise as a result of installations made by the Contractor and as to any award made thereunder.

9.6. In the event this Contract and/or the Contractor's, or its subcontractor, work and services provisioned hereunder is/are subject to the provisions of any Federal or State statute or regulations, or the City Charter or City Ordinance, the Contractor shall indemnify, defend and hold harmless the City from any fine, penalty or other amounts imposed on the City under said statutes, regulations, Charter or Ordinances, if caused by Contractor, or its subcontractor, omission or commission.

10. Contract Bonds. In the City's sole discretion, the City may elect to require the Contractor to furnish to the City a performance bond or payment bond or both, each bond written for a penal sum equaling the "Total Compensation" amount of each Task Order, in a form and

with a surety, acceptable to the City. If the City elects to require such bonds, the City shall include such requirement in any Task Order for which such bonds will be required by the City. The Contractor shall then furnish to the City any required bond prior to the issuance of the corresponding Purchase Order by the City. The bonds shall continue in effect for the greater of **(i)** the warranty period set forth in Section 7 of this Contract, or **(ii)** 365 calendar days after City delivers its written notice of its acceptance of all projects identified in any fully executed Task Order.

11. Contractor's Insurance.

11.1. The Contractor shall not commence work under this Contract until all insurance required under this Section 11 has been obtained by the Contractor and such insurance has been approved by the City. The Contractor shall not allow any subcontractor to commence work on any subcontract until all insurance required of any such subcontractor has been so obtained and approved by the City. Insurance shall be provided by insurers, satisfactory to the City and authorized to do business in the State of Connecticut, an "A-" Best's Rating and at least a Class VIII or better financial size category as shown in the most current A.M. Best Company ratings.

11.2. At no additional cost to the City, the Contractor shall purchase and maintain the insurance coverages set forth below which shall protect the City from claims which may arise out of or result from the Contractor's obligation under this Contract, whether such obligations are the Contractor's or subcontractor or person or entity directly or indirectly employed by said Contractor or subcontractor, or by any person or entity for whose acts said Contractor or subcontractor may be liable.

11.3. Each insurance policy shall state that the insurance company shall agree to investigate and defend the insured against all claims for damages, even if groundless. If any insurance required herein is to be issued or renewed on a claims made form as opposed to an occurrence form, the retroactive date for coverage shall be no later than the commencement date of this Contract and shall provide that in the event of cancellation or non-renewal, the discovery period for insurance claims ("Tail Coverage") shall be available for at least 60 months.

11.4. The following policies with stated limits shall be maintained, in full force and effect, at all times during which the services are to be performed by the Contractor:

11.4.1 General Liability Insurance:
$1,000,000.00 each Occurrence
$2,000,000.00 General Aggregate
$2,000,000.00 Products and Completed Operations Aggregate

11.4.2 Automobile Liability Insurance:
$1,000,000.00 combined single limit (CSL)
Any Auto, All Owned and Hired Autos

11.4.3 Workers' Compensation:
Statutory Limits within the State of Connecticut:
Employers' Liability:
$1,000,000.00 EL Each Accident
$1,000,000.00 EL Disease Each Employee
$1,000,000.00 EL Disease Policy Limit

11.4.4 Excess/Umbrella Liability Insurance:
$1,000,000.00 each Occurrence
$1,000,000.00 Aggregate

11.5. Failure to Maintain Insurance: In the event the Contractor fails to maintain the minimum required coverage as set forth herein, the City may at its option purchase same, and offset the Contractor's invoices for the cost of said insurance.

11.6. Cancellation: The City of Waterbury shall receive written notice of cancellation from the Contractor at least thirty (30) calendar days prior to the date of actual cancellation, regardless of the reason for such cancellation.

11.7. Certificates of Insurance: All Contractor's Insurance except Workers' Compensation shall be endorsed to add the City of Waterbury and its Board of Education as additional insured and provide waiver of subrogation on all policies. The insurance afforded the additional insured shall be primary and non-contributory insurance and the coverage and limits provided under the Contractor's policies shall not be reduced or prorated by the existence of any other insurance applicable to any loss the additional insured may have suffered. Prior to the execution of this Contract by the City, the Contractor shall furnish to the City, subject to City approval, certificate(s) of insurance and Additional Insured Endorsement and Waiver of Subrogation Endorsement verifying the above coverages, including the naming of the City of Waterbury, as follows: **"The City of Waterbury and its Board of Education are listed as Additional Insured on a primary and non-contributory basis on all policies except Workers' Compensation. All policies shall include a Waiver of Subrogation."** The City's RFP Number must be shown on the certificate of insurance to assure correct filing. The Contractor must supply replacement/renewal certificates at least 30 days prior to the expiration of the policy(ies). Said certificates shall contain a provision that coverage afforded under the policies shall not be cancelled or reduced for any reasons unless notice of than thirty (30) calendar days has been mailed to the City's Using Agency and a copy to the City's Office of Corporation Counsel, 235 Grand Street, Waterbury, CT 06702.

11.8. No later than thirty (30) calendar days after Consultant receipt, the Consultant shall deliver to the City a copy of the Consultant's insurance policies and endorsements and riders.

11.9. If any policy is written on a "Claims Made" basis, the policy must be continually renewed for a minimum of two (2) years from the completion date of this contract. If the policy is replaced and/or the retroactive date is changed, then the expiring policy must be endorsed to extend the reporting period for claims for the policy in effect during the contract for two (2) years from the completion date.

11.10. Original, completed Certificates of Insurance must be presented to the City of Waterbury prior to contract issuance. Contractor agrees to provide replacement/renewal certificates at least thirty (30) calendar days prior to the expiration date of the policies. Should any of the above described policies be cancelled, limits reduced or coverage altered, thirty (30) calendar days written notice must be given to the City of Waterbury.

12. Conformance with Federal, State and Other Jurisdictional Requirements. By executing this Contract, the Contractor represents and warrants that, at all pertinent and relevant times to the Contract, it has been, is and will continue to be in full compliance with all applicable statutes, acts, ordinances, guidelines, resolutions, orders, judgments, decrees, injunctions, rules, and regulations of all government authorities applicable to performance by the Contractor of services hereunder, including those having jurisdiction over its registration and licensing to perform services hereunder; including, but not limited to, the following: EQUAL EMPLOYMENT OPPORTUNUTY; COPELAND ANTI-KICKBACK ACT, as supplemented in the Department of Labor Regulations (29 CFR, Part 3); DAVIS BACON ACT as supplemented by Department of Labor Regulations (29 CFR Part 5); Section 103 and 107 of the Contract Work Hours and Safety Standards Act, as supplemented by the Department of Labor Regulations (29 CFR Part 5); the HOUSING and COMMUNITY DEVELOPMENT ACT of 1974, as amended, TITLE 31 and Section 12-430(7) of the State of Connecticut General Statutes. All applicable sections of the City Charter and Code of Ordinances are incorporated by reference made a part hereof.

12.1. Taxes-Federal, State and Local. The City is exempt from Federal Excise and Transportation, State and Local Sales and Use Taxes, including without limitation, taxes that would otherwise be imposed upon the Contractor for transactions required or necessitated hereunder between it and its subcontractors, suppliers, etc. The Contractor remains liable, however, for any applicable tax obligations it incurs. Moreover, the Contractor represents that the bid and pricing contained in this Contract do not include the amount payable for said taxes.

12.2. Labor and Wages-Federal and State. The Contractor and its subcontractors shall conform to Federal and State of Connecticut labor laws, and all other laws, ordinances, and legal requirements affecting the work in Connecticut.

12.2.1 The Contractor is aware of, and shall comply with, the provisions of Title 31, §53 of the Connecticut General Statutes, latest revision (the "Act"), concerning the payment of minimum wages for work on public facilities. The provisions of the Act are hereby incorporated by reference and made a part of this Contract. The Act provides that the Connecticut prevailing wage law applies

to certain remodeling, refurbishing, alteration, repair and new construction. The wages paid on an hourly basis to any person performing the work of any mechanic, laborer or worker on the work herein contracted to be done and the amount of payment or contribution paid or payable on behalf of each such person to any employee welfare fund, as defined in Con. Gen. Stat. 31-53(i), shall be at a rate equal to the rate customary or prevailing for the same work in the same trade or occupation in the town in which such public works project is being constructed. Any contractor who is not obligated by agreement to make payment or contribution on behalf of such persons to any such employee welfare fund shall pay to each mechanic, laborer or worker as part of such person's wages the amount of payment or contribution for such person's classification on each pay day.

12.2.2 The Contractor is aware of, and shall comply with, the provisions of both the Federal Davis-Bacon Act and the Federal American Recovery and Reinvestment Act of 2009, the provisions of both acts hereby incorporated by reference and made a part of this Contract. The Federal Davis-Bacon Act provides that Federal wage rate laws apply to certain federally funded contracts. The American Recovery and Reinvestment Act ("ARRA") provides that Federal wage rate laws apply to all ARRA funded contracts regardless of the contract's dollar value.

12.3. Compliance with Chapters 34, 38, and 39 of the Code of Ordinances of the City. By executing this Contract, the Contractor represents and warrants that, at all pertinent and relevant times to the Contract, it has been, is and will continue to be in full compliance with the provisions of Chapters 34, 38, and 39 of the Code of Ordinances of the City and well as any other relevant provisions of the Charter and the Code of Ordinances.

12.4. Compliance with CONN. GEN. STAT. § 4a-60g, amended by Public Act 25-168, and, as may be amended from time to time.

12.4.1 Definitions – For purposes of Section 12.4 and Section 13.3 of this Contract:

i. "Awarding agency" means a state agency or political subdivision of the state, including a municipality or quasi-public agency.

ii. "Minority business enterprise" means any small contractor (A) fifty-one per cent or more of the capital stock, if any, or assets of which are owned by a person or persons who (i) exercise operational authority over the daily affairs of the enterprise, (ii) have the power to direct the management and policies and receive the beneficial interest of the enterprise, (iii) possess managerial and technical competence and experience directly related to the principal business activities of the enterprise, and (iv) are members of a minority, as defined in subsection (a) of section 32-9n, or are individuals with a disability, or (B) which is a nonprofit

corporation in which fifty-one per cent or more of the persons who exercise operational authority over the enterprise, (i) possess managerial and technical competence and experience directly related to the principal business activities of the enterprise, (ii) have the power to direct the management and policies of the enterprise, and (iii) are members of a minority, as defined in this subsection, or are individuals with a disability.

iii. "Public works contract" means any agreement (A) for construction, rehabilitation, conversion, extension, demolition or repair of changes or improvements in real property, and (B) that is financed in whole or in part by the state, including, but not limited to, matching expenditures, grants, loans, insurance or guarantees, where such funding equals one hundred fifty thousand dollars or more.

iv. "Small contractor" means (A) any contractor, subcontractor, manufacturer, service company or corporation that (i) maintains its principal place of business in the state, and (ii) is registered as a small business in the federal database maintained by the United States General Services Administration, as required to do business with the federal government, or (B) any nonprofit corporation that (i) maintains its principal place of business in the state, (ii) that had gross revenues not exceeding twenty million dollars in the most recently completed fiscal year prior to such application, and (iii) that is independent.

12.4.2 The Contractor and subcontractor shall comply with the specific requirements of the State of Connecticut Set Aside Program, CONN. GEN. STAT. § 4a-60g, **amended by Public Act 25-168, and as may be amended from time to time,** if the public works contact awarded to the Contactor is funded as provided in 12.4.3 below.

12.4.3 The Contactor shall be subject to the following set-aside requirements if the public works contact, is funded in whole or in part by the State of Connecticut, and is equal to, or in excess of ONE HUNDRED FIFTY THOUSAND DOLLARS ($150,000.00).

12.4.4 Set-Aside requirements – Any contractor awarded a public works contract, on the basis of competitive bidding procedures, shall comply with the following Set –Aside requirements:

i. This contract is subject to state contract compliance requirements, including nondiscrimination statutes and spending allocation goals. There is $TBD in state-funding for this project. State law requires project-specific goals be set for this project based on the project's needs and available Small Business Enterprises ("SBEs") and Minority Business Enterprises ("MBEs"). The SBE goal for this project is N/A. The MBE goal

for this project is N/A. The selected contractor must demonstrate good faith effort to meet the spending allocation goals.

12.4.5 No Affiliated Subcontracting to Satisfy Goal. The Contractor shall not subcontract with an affiliated person or entity in violation of Conn. Gen. Stat. § 4a-60g. An affiliated contractor or subcontractor shall not be credited toward the City's spending-allocation goals where such credit is prohibited by law.

12.4.5.1 Changes in Subcontractors. The Contractor shall not replace, terminate, materially reduce the work of, or otherwise alter the participation of a small contractor or minority business entity identified for purposes of satisfying a spending allocation goal without providing the City with prior written notice and satisfying all requirements imposed by the Commission on Human Rights and Opportunities and applicable law. The Contractor shall document good-faith efforts to replace any subcontractor with another qualified certified contractor where required by law or the Commission on Human Rights and Opportunities.

12.4.6 Failure of the Contractor or subcontractor to comply with the State of Connecticut Set-Aside program requirements, including, but not limited to, good faith efforts plan and compliance report submissions, shall be a material breach of this Contract. If required by the City, the Contractor shall provide the City with evidence of submission and disposition of all required State of Connecticut Set-Aside programs reports.

13. Discriminatory Practices. In performing this Contract, the Contractor shall not discriminate against any employee or applicant for employment, with respect to his or her hire, tenure, terms, conditions or privileges of employment, or any matter directly or indirectly related to employment, because of race, color, sex, age, religious creed, disability, national origin or ancestry, marital status, family status, prior psychiatric treatment, health care, military status or source of income or because of a handicap that is unrelated to the employee's or the applicant's ability to perform the duties of a particular job or position. Subcontracts with each subcontractor shall contain a provision requiring non-discrimination in employment as herein specified. This covenant is required pursuant to §93.04 of the Code of Ordinances of the City and any breach thereof may be regarded as a material breach of this Contract. Said provisions with subcontractors shall require conformity and compliance with all local, state and federal laws, rules and regulations and Executive orders pertaining to discrimination and equal opportunity requirements.

13.1. Discrimination Because of Certain Labor Matters. No person employed on the work covered by this Contract shall be discharged or in any way discriminated against because such person has filed any complaint or instituted or caused to be instituted any proceeding or has testified or is about to testify in any proceeding under or related to the labor standards applicable hereunder to its employer.

13.2. Equal Opportunity. In its execution of the performance of this Contract, the Contractor shall not discriminate and shall comply with applicable laws prohibiting discrimination on the grounds of race, color, religion, sex, national origin or citizenship status, age or handicap. The Contractor agrees to comply with all local, state and federal laws, rules and regulations and Executive orders pertaining to discrimination and equal opportunity requirements, and will require the same of all subcontractors

13.3. Affirmative Action/Nondiscrimination.

13.3.1. Pursuant to CONN. GEN. STAT. § 4a-60, as amended by Public Act 25-168, and as may be amended from time to time, the following are required for every Public Works Contract:

(b) Except as provided in section 10a-151i, every contract to which an awarding agency is a party shall contain the following provisions:

(1) The contractor agrees and warrants that in the performance of the contract such contractor will not discriminate or permit discrimination against any person or group of persons on the grounds of race, color, religious creed, age, marital status, national origin, ancestry, sex, sexual orientation, gender identity or expression, status as a veteran, status as a victim of domestic violence, intellectual disability, mental disability or physical disability, including, but not limited to, blindness, unless it is shown by such contractor that such disability prevents performance of the work involved, in any manner prohibited by the laws of the United States or of the state of Connecticut; and the contractor further agrees to take affirmative action to ensure that applicants with job-related qualifications are employed and that employees are treated when employed without regard to their race, color, religious creed, age, marital status, national origin, ancestry, sex, gender identity or expression, sexual orientation, status as a veteran, status as a victim of domestic violence, intellectual disability, mental disability or physical disability, including, but not limited to, blindness, unless it is shown by such contractor that such disability prevents performance of the work involved;
(2) The contractor agrees, in all solicitations or advertisements for employees placed by or on behalf of the contractor, to state that it is an "affirmative action-equal opportunity employer" in accordance with regulations adopted by the Commission on Human Rights and Opportunities;
(3) The contractor agrees to provide each labor union or representative of workers with which such contractor has a collective bargaining agreement or other contract or understanding and each vendor with which such contractor has a contract or understanding, a notice to be provided by the Commission on Human Rights and Opportunities advising the labor union or workers' representative of the contractor's commitments under this section, and to post copies of the notice in conspicuous places available to employees and applicants for employment;
(4) The contractor agrees to comply with each provision of this section and sections 46a-68e and 46a-68f and with each regulation or relevant order issued by said commission pursuant to sections 46a-56, 46a-68e, 46a-68f and 46a-86; and
(5) The contractor agrees to provide the Commission on Human Rights and Opportunities with such information requested by the commission, and permit access to pertinent books, records

and accounts, concerning the employment practices and procedures of the contractor as relate to the provisions of this section and section 46a-56.

(c) If the contract is a public works contract, the contractor agrees and warrants that he or she will make good faith efforts to employ minority business enterprises as subcontractors and suppliers of materials on such public works project.

(d) Except as provided in section 10a-151i:

(1) Any contractor who has one or more contracts with an awarding agency or who is a party to a public works contract shall include a nondiscrimination affirmation provision certifying that the contractor understands the obligations of this section and will maintain a policy for the duration of the contract to assure that the contract will be performed in compliance with the nondiscrimination requirements of subsection (b) of this section. The authorized signatory of the contract shall demonstrate his or her understanding of this obligation by (A) initialing the nondiscrimination affirmation provision in the body of the contract, (B) providing an affirmative response in the required online bid or response to a proposal question which asks if the contractor understands its obligations, or (C) signing the contract.

(e) Determination of the contractor's good faith efforts shall include, but shall not be limited to, the following factors: The contractor's employment and subcontracting policies, patterns and practices; the timing and value of bids; affirmative advertising, recruitment and training; technical assistance activities and such other reasonable activities or efforts as the Commission on Human Rights and Opportunities may prescribe that are designed to ensure the participation of minority business enterprises in public works projects.

(f) The contractor shall develop and maintain adequate documentation, in a manner prescribed by the Commission on Human Rights and Opportunities, of its good faith efforts.

(g) The contractor shall include the provisions of subsections (b) and (c) of this section in every subcontract or purchase order entered into in order to fulfill any obligation of a contract with the state, and in every subcontract entered into in order to fulfill any obligation of a public works contract, and such provisions shall be binding on a subcontractor, vendor or manufacturer, unless exempted by regulations or orders of the Commission on Human Rights and Opportunities.

13.3.2. Pursuant to CONN. GEN. STAT. § 4a-60a, as amended by Public Act 23-204, and as may be amended from time to time, the following are required for every Public Works Contract:

(a) Every contract to which an awarding agency is a party, every contract for a quasi-public agency project and every public works contract shall contain the following provisions:

(1) The contractor agrees and warrants that in the performance of the contract such contractor will not discriminate or permit discrimination against any person or group of persons on the grounds of sexual orientation, in any manner prohibited by the laws of the United States or of the state of Connecticut, and that employees are treated when employed without regard to their sexual orientation;

(2) The contractor agrees to provide each labor union or representative of workers with which such contractor has a collective bargaining agreement or other contract or understanding and each vendor with which such contractor has a contract or understanding, a notice to be provided by the Commission on Human Rights and Opportunities advising the labor union or workers' representative of the contractor's commitments under this section, and to post copies of the notice in conspicuous places available to employees and applicants for employment;

(3) The contractor agrees to comply with each provision of this section and with each regulation or relevant order issued by said commission pursuant to section 46a-56;

(4) The contractor agrees to provide the Commission on Human Rights and Opportunities with such information requested by the commission, and permit access to pertinent books, records and accounts, concerning the employment practices and procedures of the contractor which relate to the provisions of this section and section 46a-56; and

(5) Nondiscrimination affirmation provision. The Contractor understands the obligations of this section 13.3 and will maintain a policy for the duration of the Contract to assure that the Contract will be performed in conformance with the nondiscrimination requirements of this section 13.3. The authorized signatory of the Contract shall demonstrate his or her understanding of this obligation by either (A) initialing the nondiscrimination affirmation provision in the body of the Contract, [or] (B) providing an affirmative response in the required online bid or response to a proposal question which asks if the Contractor understands its obligations, or (C) signing the Contract.

14. Good Jobs Ordinance

14.1. Conformance With An Ordinance Concerning The Hiring Of Waterbury Residents On Certain Publicly-Funded Construction Projects.

14.1.1 The Contractors and its Subcontractors shall comply with the specific requirements of "An Ordinance Concerning the Hiring of Waterbury Residents on Certain Publicly-Funded Construction Projects" (the "Good Jobs Ordinance"), as may be amended from time to time and as set forth in Chapter

34 of the Code of Ordinances of the City. While the principal provisions of the ordinance are summarized as set forth in paragraphs C-H below, the Contractor does hereby acknowledge that it has reviewed a copy of the Good Jobs Ordinance and that it has read the Ordinance and that Contractor is familiar with the obligations imposed on the Contractor and each Subcontractor by the Good Jobs Ordinance.

14.1.2 Failure of the Contractor or its Subcontractors to comply with the Good Jobs Ordinance shall be a material breach of this Agreement.

14.1.3 This paragraph shall apply to a Covered Project, as that term is defined in the Good Jobs Ordinance, in the City with a value of $500,000.00 or greater and only to the extent permitted by federal and state law.

14.1.4 Definitions. For purposes of this paragraph:

i. "Administrator" shall be defined as it is in the Good Jobs Ordinance.

ii. "Apprentice" shall be defined as it is in the Good Jobs Ordinance.

iii. "Basic Skilled Worker" shall be defined as it is in the Good Jobs Ordinance.

iv. "Contractor" shall be defined as it is in the Good Jobs Ordinance.

v. "Covered Project" shall be defined as it is in the Good Jobs Ordinance.

vi. "Hiring Goal" shall be defined as it is in the Good Jobs Ordinance.

vii. "Resident" shall be defined as it is in the Good Jobs Ordinance.

viii. "Subcontractor" shall be defined as it is in the Good Jobs Ordinance and shall include the Contractor's direct subcontractor providing construction work and all lower tiered (level) providers of construction work.

14.1.5 Hiring Goals. If this Agreement requires the Contractor to perform work on a Covered Project, the Contractor and each Subcontractor shall have as its hiring goals:

i. at least thirty percent (30%) of its total worker hours performed by City Residents, and

ii. at least twenty-five percent (25%) of construction trade jobs shall go to Apprentices and/or Basic Skilled Workers, and

iii. at least seventy percent (70%) of all "new hires" (as that term is defined in the Good Jobs Ordinance) shall be "economically disadvantaged" individuals (as that term is defined in the Good Jobs Ordinance), and

iv. a minimum of five percent (5%) of the construction workforce labor hours will be local resident, minority artisans, and

v. a minimum of five percent (5%) of the construction workforce labor hours will be women, and

vi. a minimum of ten percent (10%) of the total work hours shall be allocated for minorities, or

vii. as may otherwise be required by any superseding Federal or State employment discrimination prohibition laws.

14.1.6 Good Faith Efforts. The Contractor and each Subcontractor shall engage in Good Faith Efforts to comply with the Hiring Goals. For the purposes of this paragraph, the term "Good Faith Efforts" shall have the same meaning as it does in the Good Jobs Ordinance.

The Contractor and each Subcontractor shall individually implement Good Faith efforts to satisfy the Hiring Goals.

14.1.7 Action Plan and Pre-Construction Meeting. Not later than fourteen (14) business days prior to the scheduled commencement date for construction, the Contractor shall submit a written plan-of-action to the City and to the Administrator of the Good Jobs Ordinance defining how the Contractor, and each Subcontractor, shall implement Good Faith Efforts to fulfill the Hiring Goals. Each plan-of-action shall include the anticipated number of job positions required for the Work. Not later than five (5) business day prior to the commencement date of construction, the Contractor must attend a mandatory "pre-construction" meeting with the City to review all plans-of-action and other relevant materials. No construction work shall proceed absent this pre-construction meeting.

14.1.8 Other Contractor Obligations. In addition to the foregoing, the Contractor shall ensure that all Subcontractor contracts and agreements expressly set forth and state as binding obligations therein, subject to appropriate party name change, the above Hiring Goals and Good Faith Efforts. The Contractor shall be accountable for, and liable to the City for, Contractor and each Subcontractor compliance with Hiring Goals and Good Faith efforts.

i. The Contractor shall meet with the Administrator no less than four (4) weeks prior to the commencement of construction on a Covered Project and provide the Administrator with the number of job positions to be created by the project by trade and the qualifications by job tile.

ii. The Contractor shall be required to produce Contractor and Subcontractor documentation that may be required under the provisions of the Good Jobs Ordinance or that the City or the Administrator reasonably believes will assist the City or the Administrator with their evaluation of Hiring Goals and Good Faith Efforts.

iii. The Contractor shall deliver weekly certified payroll records to the City within five (5) working days of the end of each payroll period. Moreover, the Contractor shall require each Subcontractor to create weekly certified payroll records.

iv. The Contractor's and each Subcontractor's payroll records shall include the person-hours, the residential address, race, gender, hiring date, and apprentice (job) classification of all personnel employed under this Agreement and all Contracts and Sub-Contracts thereunder. The Contractor and each Subcontractor shall mark their respective final payroll period records as being final and be signed by an authorized officer or employee.

14.2 Liquidated Damages Applicable To Section 14.1

14.2.1 If the City finds that the Contractor, or a Subcontractor, has failed to achieve Hiring Goals during any five (5) day work period (Monday through Friday), the City shall:

i. issue a written notice to the Contractor specifying the matters constituting such failure and the time period within which Good Faith Efforts documentation must be delivered to the City for its evaluation.

ii. if the Good Faith documentation is not provided or, if provided, it fails to demonstrate compliance with Good Faith Efforts, the Contractor shall, for each failure by the Contractor or a Subcontractor to achieve the Hiring Goals during a full five day work period, pay to the City one thousand dollars ($1,000.00) as liquidated damages.

14.2.2 If the City finds that the Contractor, or a Subcontractor, has failed to deliver weekly certified payroll records to the City within five (5) working days of the end of each payroll period the Contractor shall, as liquidated damages pay one thousand dollars ($1,000.00) to the City for each week of ongoing violation.

14.2.3 The City shall provide the Contractor with an invoice identifying all sums due the City, as liquidated damages, as a result of the Contractor or a Subcontractor's failure to comply with the Good Jobs Ordinance as set forth above.

14.2.4 No portion of any invoice submitted by a Contractor that is subject to liquidated damages shall be paid by the City until such time as all liquidated damages relating to that invoice have been paid to the City.

14.2.5 The foregoing liquidated damages provisions shall be expressly set forth, subject to appropriate party name adjustments, as material provisions in all Contracts that the Contractor has with Subcontractors and the Contractor is obligated hereunder to enforce compliance in such Contracts with Subcontractors.

14.2.6 Any payment of liquidated damages hereunder shall not preclude a later claim, nor any later finding of a breach, or any payment of additional damages related to such later claim.

15. Housing and Urban Development Section 3 Clause. In the event this Contract is funded, in whole or in part, through Housing and Urban Development assistance, 24 C.F.R. §135.38 may apply and the Contractor shall then be required to comply with the following (referred to as the "Section 3 clause"):

15.1. The work to be performed under this Contract is subject to the requirements of Section 3 of the Housing and Urban Development Act of 1968, as amended, 12 U.S.C. § 1701u (Section 3). The purpose of Section 3 is to ensure that employment and other economic opportunities generated by HUD assistance or HUD-assisted Projects covered by Section 3, shall, to the greatest extent feasible, be directed to low and very low-income persons, particularly persons who are recipients of HUD assistance for housing.

15.2. The parties to this Contract agree to comply with HUD's regulations in 24 C.F.R. part 135, which implement Section 3. As evidenced by their execution of this Contract, the parties to this Contract certify that they are under no contractual or other impediment that would prevent them from complying with the part 135 regulations.

15.3. The Contractor agrees to send to each labor organization or representative of workers with which the Contractor has a collective bargaining agreement or other understanding, if any, a notice advising the labor organization or workers' representative of the Contractor's commitments under this Section 3 clause, and will post copies of the notice in conspicuous places at the work site where both employees and applicants for training and employment positions can see the notice. The notice shall describe the Section 3 preference, shall set forth minimum number and job titles subject to hire, availability of apprenticeship and training positions, the qualifications for each; and the

name and location of the person(s) taking applications for each of the positions; and the anticipated date the work shall begin.

15.4. The Contractor agrees to include this Section 3 clause in every subcontract subject to compliance with regulations in 24 C.F.R. part 135, and agrees to take appropriate action, as provided in an applicable provision of the subcontract or in this Section 3 clause, upon a finding that the subcontractor is in violation of the regulations in 24 C.F.R. part 135. The Contractor will not subcontract with any subcontractor where the contractor has notice or knowledge that the subcontractor has been found in violation of the regulations in 24 C.F.R. part 135.

15.5. The Contractor will certify that any vacant employment positions, including training positions, that are filled **(i)** after the Contractor is selected but before the Contract is executed, and **(ii)** with persons other than those to whom the regulations of 24 C.F.R. part 135 require employment opportunities to be directed, were not filled to circumvent the Contractor's obligations under 24 C.F.R. part 135.

15.6. Noncompliance with HUD's regulations in 24 C.F.R. part 135 may result in sanctions, termination of this contract for default, and debarment or suspension from future HUD assisted contracts.

15.7. With respect to work performed in connection with Section 3 covered Indian housing assistance, section 7(b) of the Indian Self-Determination and Education Assistance Act (25 U.S.C. § 450e) also applies to the work to be performed under this Contract. Section 7(b) requires that to the greatest extent feasible **(i)** preference and opportunities for training and employment shall be given to Indians, and **(ii)** preference in the award of contracts and subcontracts shall be given to Indian organizations and Indian-owned Economic Enterprises. Parties to this Contract that are subject to the provisions of Section 3 and section 7(b) agree to comply with Section 3 to the maximum extent feasible, but not in derogation of compliance with section 7(b).

16. Termination.

16.1. Termination of Contract for Cause. If, through any cause, the Contractor shall fail to fulfill in a timely and proper manner its obligations under this Contract, or if the Contractor shall violate any of the covenants, agreements, or stipulations of this Contract, the City shall thereupon have the right to terminate this Contract by either **(i)** giving written notice to the Contractor of a date certain by which Contractor shall, to the written satisfaction of the City, cure after which and without further action by any party, such termination shall automatically become effective and binding, or **(ii)** giving written notice to the Contractor specifying the effective date of such termination at least five (5) business days before the effective date of such termination.

16.1.1 In the event of a termination, all finished or unfinished documents, data, studies, reports, plans, specifications, drawings, supplies, services, etc. prepared

by the Contractor under this Contract shall, at the option of the City, become the City's property, and the Contractor shall be entitled to receive just and equitable compensation for any satisfactory work completed for such.

16.1.2 Notwithstanding the above, the Contractor shall not be relieved of liability to the City for damages sustained by the City by virtue of any breach of this Contract by the Contractor, and the City may withhold any payments to the Contractor for the purpose of setoff until such time as the exact amount of damages due the City from the Contractor is determined.

16.2. Termination for Convenience of the City. The City may terminate this Contract at any time for the convenience of the City, by a notice in writing from the City to the Contractor. If this Contract is terminated by the City as provided herein, the Contractor will be paid an amount which bears the same ratio to the total compensation as the services actually performed bear to the total services of the Contractor covered by this Contract, less payments of compensation previously made.

16.3. Termination for Non-Appropriation or Lack of Funding. The Contractor acknowledges that the City is a municipal corporation and that this Contract is subject to the appropriation and disbursement of funds by the City sufficient for this Contract for each budget year in which this Contract is in effect. The Contractor therefore agrees that the City shall have the right to terminate this Contract in whole or in part without penalty to the City in the event that sufficient funds to provide for City payment(s) under this Contract is not appropriated, not authorized, or not made available, or such funding has been reduced. In the event this Contract is subject, in whole or in part, to the appropriation and disbursement of Federal and/or State funds and those Federal and/or State funds are not appropriated or are not disbursed to the City, the Contractor hereby agrees that the City shall have the right to terminate this Contract in whole or in part without penalty to the City.

16.3.1 Effects of Non-Appropriation. If funds to enable the City to effect continued payment under this Contract are not appropriated, authorized or otherwise made available by law, the City shall have the right to terminate this Contract without penalty at the end of the last period for which funds have been appropriated, authorized or otherwise made available by law by giving written notice of termination to the Contractor.

16.3.2 Effects of Reduced Levels of Funding. If funding is reduced by law, or funds to pay the Contractor for the agreed to level of the products, services and functions to be provided by the Contractor under this Contract are not appropriated, authorized or otherwise made available by law, the City may, upon seven (7) business days written notice to the Contractor, reduce the level of the products, services or functions in such manner and for such periods of time as the City may elect. The charges payable under this Contract shall be equitably

adjusted to reflect such reduced level of products, services or functions and the parties shall be afforded the rights set forth in this Contract.

16.3.3 No Payment for Lost Profits. In no event shall the City be obligated to pay or otherwise compensate the Contractor for any lost or expected future profits.

16.4. Rights Upon Termination.

16.4.1 Termination for Cause. In the event the City terminates this Contract for cause, the Contractor shall relinquish to the City any applicable interest, title and ownership including, but not limited to, perpetual use of any proprietary rights in and to the products and deliverables delivered to, in possession of and properly invoiced and paid for by (except to the extent such invoiced amount is disputed) the City. With regard to third party products, the Contractor shall transfer all licenses which it is permitted to transfer in accordance with the applicable third party license. The City shall have no financial obligation to compensate the Contractor for such terminated products unless payment is otherwise approved by the City prior to such termination. The Contractor shall be liable for costs incurred by the City, including but not limited to reasonable attorney fees and all court awarded fees and costs incurred in terminating this Contract in whole or in part.

16.4.2 Termination for Lack of Funding or Convenience. In the event of termination by the City for lack of funding or convenience, the City shall pay the Contractor for all labor, services, equipment, materials, reports, plans, specifications, drawings, deliverables, incidentals, etc.(including any holdbacks) installed and delivered to the City as of the Termination Date and the Contractor shall relinquish to the City any applicable interest, title and ownership including, but not limited to perpetual use of any proprietary rights in and to said labor, services, equipment, materials, reports, plans, specifications, drawings, deliverables, incidentals, etc. delivered to, in possession of and paid for by the City (except to the extent any invoiced amount is disputed). The Contractor shall be required to exercise commercially reasonable efforts to mitigate damages.

16.4.3 Assumption of Subcontracts. In the event of termination, the City shall have the right to assume, at its option, any and all subcontracts for products, services and functions provided exclusively under this Contract.

16.4.4 Delivery of Documents. In the event of termination, **(i)** the Contractor shall promptly deliver to the City, in a manner reasonably specified by the City, all documents and other tangible items furnished by, or owned, leased, or licensed by, the City, and **(ii)** the City shall pay the Contractor for all services performed and deliverables completed and accepted (pro-rated for deliverables partially completed) prior to the effective date of the termination (except to the extent any invoice amount is disputed).

16.5. Ownership of Instruments of Service. The City acknowledges the Contractor's documents, reports, plans, specifications, drawings, deliverables, etc. created and to be created pursuant to this agreement, including electronic files, are Instruments of Service. Nevertheless, the final Instruments of Service, including, but not limited to architects, engineering, construction, and similar documents, reports, plans, specifications, drawings, deliverables, etc. prepared under this agreement shall become the property of the City upon City payment for that Instrument of Service and the City reserves the right to use the Instruments of Service.

17. Force Majeure. Contractor shall not be held responsible for delays nor be subject to liquidated damages when such delays are caused by conditions beyond its control, including without limitation:

17.1. Acts of God, fire, explosion, epidemic, cyclone, flood, war, strikes, revolution, civil commotion, or acts of public enemies; and

17.2. Change of law, order, proclamation, regulation, ordinance, or governmental requirement.

Upon cessation of work for reason of force majeure delays, Contractor shall use its best efforts to meet the schedule set forth in Section 5 of this Contract.

18. Subcontracting. The Contractor shall not, without the prior written approval of the City's Using Agency, subcontract, in whole or in part, any of the Contractor's services. Any subcontractor so approved shall be required to secure and maintain insurance coverage equal to or better than that required of the Contractor and shall name the City as an additional insured party and said subcontractors shall deliver to the City a certificate of insurance evidencing such coverages. All subcontractors shall comply with all federal, state and local, laws, regulations and ordinances but such requirement shall not relieve the Contractor from its requirement that all services provided hereunder shall comply with all Federal, State and local, laws, regulations and ordinances.

18.1. The Contractor shall be as fully responsible to the City for the acts and omissions of its subcontractors, and of persons either directly or indirectly employed by them, as it is for the acts and omissions of persons directly employed by the Contractor.

18.2. The Contractor is responsible for and shall control activities of its subcontractors, and the subcontractors shall consult and cooperate with one another and other contractors working on the Project site. Each subcontractor shall furnish all necessary information to other subcontractors and shall lay out and install its own work so as to avoid any delays or interferences with the work of another. Any cost for changes, cutting and/or repairing, made necessary by failure to observe the above requirements shall be borne by the Contractor or subcontractor responsible for such failure or neglect.

18.3. The Contractor shall not, without the prior written approval of the City's Using Agency, substitute, terminate, replace or otherwise remove a subcontractor.

19. Assignability. The Contractor shall not assign any interest in this Contract, and shall not transfer any interest in the same (whether by assignment or novation) without the prior written approval of the City; provided, however, that claims for money due or to become due the Contractor from the City under this Contract may be assigned to a bank, trust, company, or other financial institution, or to a Trustee in Bankruptcy, without such approval. Notice of any such assignment or transfer shall be furnished promptly to the City.

20. Audit. The City reserves the right to audit the Contractor's books of account in relation to this Contract any time during the period of this Contract or at any time during the twelve month period immediately following the closing or termination of this Contract. In the event the City elects to make such an audit, the Contractor shall immediately make available to the City all records pertaining to this Contract, including, but not limited to, payroll records, bank statements and canceled checks.

21. Risk of Damage and Loss. The Contractor shall be solely responsible for causing the timely repair to and/or replacement of, City property or item(s) intended to become City property hereunder, where the need for repair or replacement was caused by the Contractor, by someone under the care and/or control of the Contractor, by any subcontractor of the Contractor, or by any shipper or delivery service. The Contractor shall be solely responsible for all costs and expenses, including but not limited to shipping, delivery, insurance, etc, associated with the foregoing repair and replacement obligation. Further, the Contractor shall be solely responsible for securing the City's written acceptance of all completed repairs and replacements required hereunder. The City hereby retains sole discretion to determine whether a repair or a replacement is the proper remedy.

22. Interest of Contractor. The Contractor covenants that it presently has no interest and shall not acquire any interest, direct or indirect, in the Project or any parcel of land therein or any other interest which would conflict in any manner or degree with the performance of its services hereunder. The Contractor further covenants that in the performance of this Contract no person having any such interest shall be employed.

23. Entire Contract. This Contract shall constitute the complete and exclusive statement of the contract between the parties as it relates to this transaction and supersedes all previous agreements and understandings, whether written or oral, relating to such subject matter. Any amendment to this Contract must be in writing and agreed to and executed by the City and the Contractor, and must comply with the City's Charter and Code of Ordinances.

24. Independent Contractor Relationship. The relationship between the City and the Contractor is that of client and independent contractor. No agent, employee, or servant of the Contractor shall be deemed to be an employee, agent or servant of the City. The Contractor shall be solely and entirely responsible for its acts and the acts of its agents, employees, servants and subcontractors during the performance of this agreement. It is the express intention of the

parties hereto, and the Contractor hereby agrees and covenants, that it and any and all third party(ies) and subcontractor(s) retained by the Contractor hereunder is/are not and shall not be deemed an employee of the City of Waterbury, but is/are and shall remain an independent contractor relative to the City and that nothing herein shall be interpreted or construed as creating or establishing the relationship of employer-employee between the City of Waterbury and the Contractor or between the City of Waterbury and any third party(ies) or subcontractor(s). Thus, the Contractor hereby covenants that it, its subcontractor(s) and third party(ies) shall not be entitled to the usual characteristics of employment, such as income tax withholding, F.I.C.A. deductions, pension or retirement privileges, Workers Compensation coverage, health benefits, etc. and that the Contractor shall be solely and entirely responsible for its acts and the acts of its agents, employees, servants, representatives, subcontractors and third party(ies).

25. Severability. Whenever possible, each provision of this Contract shall be interpreted in such a manner as to be effective and valid under applicable law. If any provision of this Contract, however, is held to be prohibited or invalid under applicable law, such provision shall be deemed restated to reflect the original intentions of the parties, as nearly as possible in accordance with applicable law, and if capable of substantial performance, the remaining provisions of this Contract shall be enforced as if this Contract was entered into without an invalid provision. If the ruling and/or controlling principle of law or equity leading to the ruling is subsequently overruled, modified or amended by legislation, judicial or administrative action, then the provision(s) in question as originally set forth in this Contract shall be deemed valid and enforceable to the maximum extent permitted by the new controlling principal of law or equity.

26. Survival. Any provisions of this Contract that impose continuing obligations on the parties shall survive the expiration or termination of this Contract for any reason.

27. Changes in the Project: Change Orders.

27.1. At the sole discretion of the City, a Change Order may be issued solely by the City to modify an existing party obligation set forth in this Contract where the scope of the Change Order is:

27.1.1 within the scope of the original Contract OR is made pursuant to a provision in the original Contract, AND

27.1.2 the Change Order monetary cost is charged solely against those funds encumbered for and at the time the Contract was originally executed by the City, that is those funds set forth in the original Contract as a not to exceed payment amount OR within the original Contract's contingency / allowance / reserve amount (if any is stated therein), AND

27.1.3 The Final Completion Date has not been changed.

27.2. Notwithstanding the foregoing, a Change Order shall not include

27.2.1 an upward adjustment to a Contractor's payment claim, or

27.2.2 a payment increase under any escalation clause set forth in the original Contract, or any Change Order, or any amendment.

27.3. That the work and/or services contemplated are necessary does not, in itself, permit a Change Order. Should the need for a Change Order arise, the request shall be reviewed and approved by the City's Using Agency and any City designated representative(s). To be binding and enforceable, a Change Order shall thereafter be signed by both the Contractor, any City designated representative(s), and a duly authorized representative of the City's Using Agency prior to the Contractor's delivery of the services, etc. contemplated in said Change Order. All Change Orders are governed by the provisions of this Contract. Any contract change NOT fully complying with this Section 27 shall be effectuated solely by an amendment to this Contract complying with Section 38.073 of the City's "Centralized Procurement System" ordinance.

28. Conflicts or Disputes. This Contract represents the concurrence between the City and the Contractor and governs all disputes between them. In the instance of a conflict or dispute over issues not specifically referenced within the Contract, the following documents shall be used as historical documents, without regard to the order of precedence, to resolve such conflicts or disputes, the historical documents are **(i)** the City's aforementioned **RFP No. 8890** and **(ii)** the Contractor's proposal responding to the aforementioned **RFP No. 8890.**

28.1. Procedure. This procedure supersedes all statements to the contrary occurring either in proposals or other prior agreements, oral or written, and all other communications between the parties relating to this subject.

28.2. Presumption. This Contract or any section thereof shall not be construed against any party due to the fact that the Contract or any section thereof was drafted by such party.

29. Disputes; Legal Proceedings; Waiver of Trial by Jury and Continued Performance. The Contractor agrees that its waives a trial by jury as to any and all claims, causes of action or disputes arising out of this Contract or services to be provided pursuant to this Contract. Notwithstanding any such claim, dispute or legal action, the Contractor shall continue to perform services under this Contract in a timely manner, unless otherwise directed by the City.

30. Binding Contract. The City and the Contractor each bind themselves, and their successors, assigns and legal representatives to the other party to this Contract and to the successors, assigns and legal representatives of such other party with respect to all covenants of this Contract.

31. Waiver. Any waiver of the terms and conditions of this Contract by either of the parties hereto shall not be construed to be a waiver of any other term or condition of this Contract.

32. Governing Laws. This Contract, its terms and conditions and any claims arising there from shall be governed by the laws of the State of Connecticut.

33. Notice. Except as otherwise specifically prohibited in this Contract, whenever under this Contract approvals, authorizations, determinations, notices, satisfactions or waivers are required or permitted, such items shall be effective and valid only when given in writing signed by a duly authorized officer of the City or the Contractor, and delivered in hand or sent by mail, postage prepaid, to the party to whom it is directed, which until changed by written notice, are as follows:

Contractor: Paulo Landscaping & Tree Removal LLC
235 OLD TAVERN RD
ORANGE, CT 06477

City: City of Waterbury
c/o Public Works Department
185 South Main Street, 5th Floor
Waterbury, CT 06706

With copy to:

City of Waterbury
Office of the Corporation Counsel
City Hall Municipal Building - 3rd Floor
235 Grand Street
Waterbury, CT 06702

34. City Code of Ordinances, Ethics and Conflict of Interest Code, Provisions. The Person (the term "Person" shall herein be as defined in Section 38 of the City's Code of Ordinances) supplying the labor, services, equipment, materials, reports, plans, specifications, drawings, deliverables, incidentals, etc. under this Contract shall comply with all applicable Federal, State and Municipal statutes, regulations, charters, ordinances, rules, etc, whether or not they are expressly stated in this Contract, including but not limited to the following:

34.1. It shall be a material breach of this Contract, and, except as may be permitted by regulations or rulings of the City of Waterbury Board of Ethics it shall be a violation of the City's Code of Ordinances, for any Public Official, City Employee or Member of a Board or Commission who is participating directly or indirectly in the procurement process as set forth in the City's Code of Ordinances, including those participating in exempt transactions, to become or be the employee of any person contracting with the governmental body by whom the Official, Employee, or Board or Commission member is employed or is a member.

34.2. It shall be a material breach of this Contract, and it shall be a violation of the City's Code of Ordinances for any Person to offer, give, or agree to give any current or former

Public Official, Employee or Member of a Board or Commission, or for such current or former Public Official, Employee or Member of a Board or Commission to solicit, demand, accept or agree to accept from another Person, a gratuity or an offer of employment in connection with any: decision; approval; disapproval; recommendation; preparation of any part of a program requirement or a requisition; influencing the content of any specification or procurement standard; or rendering of advice, investigation, auditing, or in any other advisory capacity in any proceeding or application, request for ruling, determination, claim or controversy, or other particular matter, pertaining to any program requirement or a Contract or Purchase Order, or to any solicitation or proposal therefore.

34.3. It shall be a material breach of this Contract and it shall be a violation of the City's Code of Ordinances for any payment, Gratuity, or offer of employment to be made as an inducement for the award of a subcontract or order, by or on behalf of a subcontractor, the prime Contractor or higher tier subcontractor or any Person associated therewith, under a Contract or Purchase Order to the City.

34.4. The value of anything transferred or received in violation of the City's Charter, Code of Ordinances, and/or regulations promulgated there under, by any Person subject to said Charter and/or Ordinances may be recovered by the City.

34.5. Upon a showing that a subcontractor made a kickback to the City, a prime Contractor or a higher tier subcontractor in connection with the award of a subcontract or order there under, it shall be conclusively presumed that the amount thereof was included in the price of the subcontract or order and ultimately borne by the City and will be recoverable hereunder from the recipient. In addition, said value may also be recovered from the subcontractor making such kickbacks. Recovery from one offending party shall not preclude recovery from other offending parties.

34.6. It shall be a material breach of this Contract and it shall be a violation of the City's Code of Ordinances for a Person to be retained, or to retain a Person, to solicit or secure a contract with the City upon an agreement or understanding for a commission, percentage, brokerage, or contingent fee; and every Person, before being awarded a City Contract, shall deliver to the City, on a City authored form, a representation that such Person has not retained anyone in violation of this subsection 34.6, the failure to deliver said form being a material breach of this Contract and a violation of the City's Code of Ordinances. Note, however, this subsection 34.6 shall not apply to full-time Employees who, as a condition of their employment, may be entitled to bonuses or other fees in accordance with their employment relationship.

34.7. The Person hereby expressly represents that he/she/it has complied with those sections of the City's Code of Ordinances requiring that said Person has **(i)** delivered to the City an affidavit, on a City authored form, stating that the Person and its affiliates have no delinquent taxes or other financial obligations owned to the City; **(ii)** filed the City authored financial disclosure statement form as set forth in the City's Code of

Ordinances regarding disclosure of financial interests; **(iii)** delivered to the City a written acknowledgement, on a City authored form, evidencing receipt of a copy of the "Ethics and Conflict of Interest" ordinance for the City of Waterbury and hereby expressly represents that said Person is in full compliance with the entirety of said Code of Ordinances; and **(iv)** filed a current list of all taxable personal and real property as required by the State of Connecticut General Statutes. Any violation of this subsection 34.7 shall be deemed a material breach of this Contract and shall be a violation of the City's Code of Ordinances.

34.8. The definitions set forth in the City's Code of Ordinances shall be the primary source for interpretation of the forgoing subsections 34.1-34.7.

34.9. The Contractor is hereby charged with the requirement that it shall have knowledge of, and shall fully comply with, all relevant provisions of the City's Charter and all relevant provisions of the City's Code of Ordinances, including without limitation Chapters 93, titled "Discriminatory Practices", Chapter 38 titled "Centralized Procurement System", and Chapter 39 titled "Ethics and Conflict of Interest", of said Code as may be amended from time to time.

34.10. The Contractor hereby acknowledges receipt of a copy of the Chapters 38 and 39 of City's Ordinance regarding Procurement, Ethics, and Conflicts of Interest and has familiarized itself with said Code and hereby agrees to adhere to said Code. The text of Chapters 38 and 39 of said Code may be obtained from the Office of the City Clerk of the City and on the internet at the City Clerk's web site: *http://www.waterburyct.org/content/458/539/default.aspx* [click link titled "The City of Waterbury Code of Ordinances *Passed 8/24/2009*". For Chapter 38, click on "TITLE III: ADMINISTRATION", then click on "CHAPTER 38: CENTRALIZED PROCUREMENT SYSTEM". For Chapter 39, click on "TITLE III: ADMINISTRATION", then click on "CHAPTER 39: ETHICS AND CONFLICTS OF INTEREST"].

34.11. The Contractor is hereby charged with the requirement that it shall have knowledge of, and shall fully comply with, the City's Ordinance Sections 34.15 through 34.99 entitled, "Ordinance Concerning the Hiring of Waterbury Residents on Certain Publicly-Funded Construction Projects," and the State of Connecticut Legislature's Special Act No. 01-1.

34.12. Every Person who conducts business with, contracts, with or provides commodities or services to the City, is charged with notice of the extent of the powers and authority, and the limitations thereon, of the Public Officials and Employees of the City, as set forth in the charter of the City, the Code of Ordinances and any Regulations or Policies pertaining thereto. In particular, and without implying any limitation as to its applicability, it applies to all Persons who participate in the procedures pertaining to the Centralized Procurement System as set forth in Chapter 38, and the Ethics and Conflict of Interest provisions set forth in Chapter 39 of the Code of Ordinances.

34.13. INTEREST OF CITY OFFICIALS. No member of the governing body of the City, and no other officer, employee, or agent of the City who exercises any functions or responsibilities in connection with the carrying out of the project, to which this agreement pertains, shall have any personal interest, direct or indirect, in this agreement.

34.14. PROHIBITION AGAINST CONTINGENCY FEES. The Contractor hereby represents that it has not retained anyone to solicit or secure a contract with the City upon an agreement or understanding for a commission, percentage, brokerage or contingency fee.

34.15. FREEDOM OF INFORMATION ACT NOTICE. Pursuant to State statute, in the event the total compensation payable to the Contractor set forth in Section 6 herein is greater than $2,500,000.00, the City is entitled to receive a copy of any and all Contractor records and files related to the performance of this Contract and those records and files are subject to the Freedom of Information Act ("the Act") and may be disclosed by the City pursuant to the Act.

[Signature page follows]

IN WITNESS WHEREOF, the parties hereto execute this Contract on the dates signed below.

WITNESSES:

CITY OF WATERBURY

Sign:_____
Print name:

By:_____
Paul K. Pernerewski, Jr.
Mayor

Sign:_____
Print name:

Date: _____

WITNESSES:

Paulo Landscaping & Tree Removal LLC

Sign:_____
Print name:

By:_____
Print name:
Its _____

Sign:_____
Print name:

Date: _____

ATTACHMENT A

Attachment A shall consist of the following, which are attached hereto, are acknowledged by the Contractor as having been received, or otherwise hereby incorporated by reference as noted below, and all are made a part hereof:

1.1.1 **RFP Number 8890** (acknowledged by the Contractor as having been received and incorporated by reference);

1.1.2 **Addendum #1 to RFP Number 8890**, dated August 25, 2026 and consisting of 8 pages (attached hereto);

1.1.3 Contractor's Proposal, consisting of 23 pages, submitted in response to **RFP Number 8890**, and Contractor's Price Proposal, dated August 18, 2026 (signed August 24, 2026) and consisting of 3 pages (all attached hereto);

1.1.4 Certificates of Insurance (attached hereto);

1.1.5 Performance Bond and Payment Bond (incorporated by reference);

1.1.6 Special Conditions (Article 1 – Article 22) consisting of 6 pages (attached hereto);

1.1.7 General Conditions (Article 1 – Article 113) consisting of 35 pages (attached hereto);

1.1.8 Scope of Work, RFP Attachment E, consisting of 3 pages (attached hereto);

1.1.9 Annual Statement of Financial Interests; Disclosure and Affidavit Re: Outstanding Obligations to the City; Debarment Certification; Corporate Resolution, Non-Collusion Affidavit (incorporated by reference);

1.1.10 Any and all amendment(s) and Change Orders issued by the City after execution of Contract (incorporated by reference);

1.1.11 All applicable Federal, State and local statutes, regulations, charter and ordinances (incorporated by reference); and

1.1.12 All permits (including, but not limited to, City of Waterbury Building permit(s)) and licenses (incorporated by reference).

Attachment B-1

"Non-Discrimination Contract Language", dated REV.07012026, attached hereto and incorporated herein.

MAUREEN McCAULEY
ASSISTANT DIRECTOR OF PURCHASING

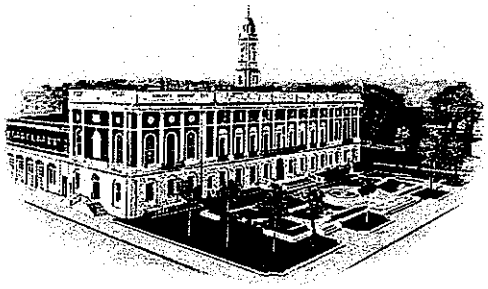

OFFICE OF THE DIRECTOR OF PURCHASING
THE CITY OF WATERBURY
CONNECTICUT

ADDENDUM #1

August 25, 2026

RFP 8890 On-Call Tree Services

Please Be Advised:
1. All Proposers are hereby notified that this Addendum No. 1 shall be part of the Contract Documents for the above referenced **RFP #8890**.
2. This Addendum amends or supplements the RFP Documents. All provisions which are not so amended or supplemented remain in full force and effect.
3. Each Proposer shall be responsible for determining that it has received all Addenda issued and shall acknowledge receipt of all Addenda on the Addendum Acknowledgment Form (see Attachment C). Failure to do so may subject the Proposer to disqualification.

The Contract Documents are hereby amended as follows:

Please refer to the questions and answers below.

Question: Per RFP, "The City of Waterbury is seeking proposals to provide the City various types of tree service including routine tree pruning including ornamental trees, scheduled removal of trees and/or limbs and emergency tree work. Tree work would be within the City of Waterbury property and Rights of Ways and may include Parks, Golf Courses and Public Buildings. Please see Attachment E, Technical Specifications." However, Attachment E is the actual Request for Proposal form. Please advise if there should be an additional document. / Technical Specifications / Attachment E The RFP references Attachment E as containing the Technical Specifications; however, Attachment E in the solicitation package appears to contain the Price Proposal forms. Is there a separate Technical Specifications document that should have been included with the RFP?
Answer: Technical Specifications attached.

Question: If there was a previously awarded contract for this, could you please provide the bid tabulation along with expended amount utilized during that contracted period.
Answer: Not available.

235 GRAND STREET • WATERBURY, CONNECTICUT 06702 • PHONE: (203) 574-6749 • FAX: (203) 597-3437

Question: Prevailing Wage / Pricing Adjustment The RFP establishes fixed regular and emergency hourly rates, while the Contract provides that prevailing wage requirements may apply depending upon the funding and nature of individual work assignments. When a Task Order is subject to a prevailing wage or other mandated wage determination not provided with the RFP, will the Contractor be permitted to adjust its contract rates to account for the applicable wage and fringe requirements?
Answer: No work to be performed under this contract will be for amounts that would require prevailing wages.

Question: Should bidders assume prevailing wage and certified-payroll requirements apply to all work when establishing Attachment E rates? If only certain Task Orders will be subject to prevailing wage, LoCIP, TAR, CHRO or Good Jobs requirements, will the contractor be permitted to adjust rates for those Task Orders to account for the applicable wage and compliance requirements?
Answer: No work to be performed under this contract will be for amounts that would require prevailing wage rates, LoCIP, TAR, CHRO, or Good Jobs Ordinance requirements.

Question: Emergency Response Time The RFP contemplates emergency tree work and 24/7 availability. Is there a required maximum response or mobilization time following notification by the City?
Answer: 2 Hours.

Question: Please define an Emergency Call, required response time, whether a crew must be continuously available/on standby, minimum billable call-out hours, and whether nights, weekends and holidays automatically qualify for Emergency Rates.
Answer: 2 Hour response time. Will not ask companies to be on Standby. Nights, weekends and Holidays qualify for emergency rates.

Question: Work near electrical conductors How will work near electrical conductors be handled? I see no mention of EHAP or MAD in this document.
Answer: It is the vendors responsibility to comply with all safety requirements, including, but not limited to, contracting utilities as needed.

Question: Is there a budget number for these operations that you can share?
Answer: No.

Question:. Please provide the City's historical annual expenditures, crew hours, emergency hours and approximate number of tree removals/pruning assignments for the prior 2-3 years.
Answer:1 year of having On Call Tree Services. Approximately 15 hours of emergency work and approximately 50+ hours of non-emergency work.

Question: How will work be allocated among multiple awardees: rotation, availability, lowest rate, quotation by task, or City discretion?
Answer: City's discretion.

Question: Please define responsibility for traffic control and police details. If police details are required by the City, will those costs be paid directly by the City or reimbursed separately rather than included in the contractor's hourly rates?
Answer: Cost to be paid directly by City.

Question: Please clarify how the City will establish the deadline against which delay damages would be measured, and confirm that any such deadline will be defined and agreed upon within each individual Task Order before work begins.
Answer: Deadline with each task order shall be made and agreed upon by both the City and the vendor prior to work starting.

Question: Please clarify when Performance and Payment Bonds will be required and whether bond premiums may be separately added to a Task Order rather than included in the base hourly rates?
Answer: Jobs over $50,000 require a Performance and Payment Bond. We anticipate no job will reach that threshold.

Thank you.

Maureen McCauley
Assistant Director of Purchasing – City of Waterbury

Attachment F Document

- TECHNICAL SPECIFICATIONS

REQUEST FOR PROPOSAL #8890
BY
THE CITY OF WATERBURY
Public Works Department
On-Call Tree Services

TECHNICAL SPECIFICATIONS

GENERAL REQUIREMENTS:

1. The selected vendor(s) must be a tree expert licensed as an "arborist" by the State of Connecticut (CT General Statutes Sec. 23-61a). The license number must be current and shall be included with the response documents.
2. All work shall be initiated by the Department of Public Works Director or his designee, Tree Warden, or Golf Course Superintendent with the request for a Task Order proposal.
3. A purchase order must be issued in advance to perform any and all work. All work will be inspected by City designated staff and upon their approval the vendor shall issue an invoice.
4. All work to be performed relating to this RFP is on City roads and properties. It will be the vendor's responsibility to maintain traffic control on all roads at all times. Should it become necessary to close off a road or sidewalk completely the vendor must obtain approval through the City of Waterbury Engineering Department. Fees for the application to close a road and/or sidewalk shall be waived.
5. Traffic Control must be provided by the vendor. The Vendor must provide traffic control signage and appropriately garbed flagmen in accordance with the most up to date Manual on Uniform Traffic Control. If police traffic control is required costs will be borne by the Vendor.
6. All pricing relating to this RFP must remain in effect and firm fixed provided in the RFP and through the term of any executed contract.
7. The selected vendor(s) must be on call 24 hours a day, 7 days a week, year round for emergency operations.
8. Response time shall be no greater than two (2) hours after contacted by City of Waterbury Staff.
9. In the event of severe weather, the vendor must make a crew available for emergency tree work. A crew will be defined as: one bucket truck, one chip truck, one chipper, one crew chief, one climber, and at least one ground person. Vendor shall be contacted by City of Waterbury Staff based on local weather forecasts. Severe weather shall include, but not be limited to hurricanes, snow and ice storms, thunderstorms or tornadoes. Any emergency work shall be billed on the hourly rate noted on the bid proposal form for emergency work.
10. The City reserves the right to inspect all equipment of the vendor(s) it is considering to award prior to making awarding the required services.

TREE PRUNING SPECIFICATIONS:

- All work will be billed at an hourly rate for this service.

- Trees must be trimmed to create a well-maintained ornamental appearance whenever possible and must adhere to all American National Standards Institute (ANSI) A300 Standards and practices.
- Maximum tree trimming-crown reduction, pruning top and sides to lighten and balance, removing deadwood and crossed branches. This pruning is to provide for public safety and the general health of the trees. However, at no time should reduction exceed ¼ of the overall size of any tree unless specified by the Director of Public Works, Tree Warden, or Superintendent of Golf Courses. The finished trees shall have a symmetrical and aesthetic form with the weight evenly distributed
- In order to shorten the length of limbs, use the thin to lateral methods. Methods of pruning which may be called Topping, Heading Back, or Lions Tailing shall not be used.
- To lighten end weight where such overburden appears likely to cause breakage of limbs four inches (4") or more in diameter, the only pruning method to be used is drop crotch. Remove cross limbs and epicormics growth (suckers) as required. Pruners will be used to complete final trimming processes. Any exceptions will be at the discretion of the Director of Public Works, Tree Warden or Superintendent of Golf Courses. All trimming will be done in a manner which will not injure or scar the tree.
- Final pruning cuts shall be made without leaving a stub. They shall be made in a manner to favor the earliest covering of the wound by callus growth. This requires that the wound be as small as possible and the cut be reasonably flush outside the branch bark ridge area and that the cambium tissues at the edge of the cut be alive and health. Trees are to be pruned at various locations around Waterbury. This work consists of safety pruning all dead wood and low branches on trees, removing major dead wood, diseased wood, stubs, and any weak leaders that may be considered dangerous.
- The vendor must be able to evaluate tree conditions and hazards and will be responsible to inform the City of any invasive insect species and pests i.e. Asian Long Horned Beetle, Winter Moth or Emerald Ash Borer encountered during any pruning or takedown operation.
- When dead wood trimming, all dead branches one (1") inch in diameter or greater at the trunk must be removed. All trees with branches over a roadway shall be pruned to provide fifteen (15') feet of clearance at the curb. The contractor must have a bucket truck with a minimum working height of 60' (sixty feet) from the bottom of the basket to the ground. The contractor will utilize equipment in good operating condition with adequate suitable equipment to perform the necessary operations. Equipment required may include a limb/brush chipper, a whole tree chipper capable of chipping logs up to 14 inches in diameter, and chip trucks. All equipment must be in good working order when reporting for work, with sharpened blades on all saws. While on an hourly rate no sharpening will be performed during the hours of operation. Vendor must provide sufficient extra sharpened blades. At times when the equipment is non-operable no payment will be made by the City of Waterbury
- It is required that hourly crew work time be verified by the Director of Public Works, Town Tree Warden and/or the Golf Course Superintendent. The

Contractor must insure that these persons are notified that the work is occurring.

- The City shall not pay for un-verified or un-approved crew times.

TREE REMOVAL SPECIFICATIONS

- This work will be billed at an hourly rate. Due to the various considerations that must be taken into account with a tree removal / take down, including variations in overall canopy volume, potential secondary involvement with other trees or methods of removal due to proximity of structures etc.; tree removal (take down) will billed at an hourly rate and will be on a case by case basis.
- The Contractor shall furnish all materials, equipment, tools, supplies, labor and transportation including fuel and power to perform all of the work necessary for the removal of trees designated during the life of the contract. Stumps must be flush cut to the ground. All grass and pavement areas are to be blown clean of all debris with a leaf blower.
- As much as is feasible, tree removal work will be scheduled for an eight (8) hour day between the hours of 7:30 a.m. and 4:00 p.m. The tree removal crew (minimum 3 men) will include a qualified tree man ("crew chief") and at least one member with the ability (and the proper equipment) to climb the trees in order to accomplish the work. The contractor must have a bucket truck with a minimum working height of 60' (sixty feet) from the bottom of the basket to the ground. The contractor will utilize equipment in good operating condition with adequate suitable equipment to perform the necessary operations. Equipment required may include a limb/brush chipper, a whole tree chipper capable of chipping logs up to 14 inches in diameter, and chip trucks. All equipment must be in good working order when reporting for work, with sharpened blades on all saws. While on an hourly rate no sharpening will be performed during the hours of operation. Vendor must provide sufficient extra sharpened blades. At times when the equipment is non-operable no payment will be made by the City.

EMERGENCY CLEARING SERVICES

- This work will be billed at an hourly rate.
- The Contractor will be responsible for the clearing of any tree or tree debris that present road obstructions

as well as all identified aerial hazards over City roadways during and immediately following an inclement or adverse weather events as part of "Make Safe" operations.

- All materials will be cut and put off the curb line in order to re-gain safe passage on public roadways as soon as possible.
- The emergency services crew will include a qualified tree man ("crew chief").
- The City may require the Contractor to provide additional crews when deemed necessary to preserve public safety.

ORIGINAL

PAULO LANDSCAPING & TREE REMOVAL LLC

PAULO LANDSCAPING & TREE REMOVAL LLC

Proposal for On-Call Tree Services

City of Waterbury – Public Works Department
RFP #8890

ORIGINAL

PAULO LANDSCAPING & TREE REMOVAL LLC

Section	Page
1. Proposer Information	_3__
Principal Members and Management	_3__
2A. Philosophy Statement and Business Focus	_3-4__
2B. Summary of Relevant Experience	_4__
2C. Personnel	_6__
Personnel Resumes	_7__
2D. Conflict of Interest	_7__
3A. Statement of Qualifications	_8__
3B. Work Plan	_8-9__
3C. Services Expected of the City	_9__
4. Cost Schedule	_9__
5. Failure to Complete Work, Default and Litigation	_10__
6. Exceptions and Alternatives	_10__
7. Additional Data	_10__

ORIGINAL

1. Proposer Information

Firm Name:
Paulo Landscaping & Tree Removal LLC

Permanent Main Office Address:
235 Old Tavern Rd., Orange CT, 06477

Date Firm Organized:
January 2004

Legal Form of Ownership:
Limited Liability Company (LLC), organized in the State of Connecticut.

Years Engaged in Tree and Related Services Under Present Name:
22 years

Principal Members and Management

Paulo Cardoso– Owner

Paulo Cardoso oversees the overall management and field operations of Paulo Landscaping & Tree Removal LLC, including tree-service operations, equipment, personnel, project execution, customer relationships, and company quality standards.

Paul Cortes – Operations Manager

Paul Cortes assists with day-to-day operations, project coordination, estimating, crew scheduling, commercial and municipal accounts, customer communication, jobsite coordination, and quality control.

2A. Philosophy Statement and Business Focus

Paulo Landscaping & Tree Removal LLC is a family-owned Connecticut company providing professional tree care and property services since 2004. We are fully licensed and insured and are committed to providing safe, reliable, and high-quality service on every project.

Our tree division specializes in tree removal, tree pruning, hazardous tree removal, 24/7 emergency storm response, stump grinding, crane-assisted removals, and site clearing. Our experienced crews and extensive fleet of specialized equipment allow us to safely and efficiently complete everything from routine tree maintenance to large and complex tree removal projects.

Paulo Landscaping & Tree Removal LLC serves municipalities, universities, medical facilities, commercial properties, condominium associations, and residential clients throughout Connecticut. Our business is built on quality workmanship, safety, dependable service, property protection, thorough cleanup, and long-term relationships with our clients.

2B. Summary of Relevant Experience

Paulo Landscaping & Tree Removal LLC has experience providing tree removal, pruning, hazardous tree removal, crane-assisted removals, and ongoing tree maintenance for municipalities, universities, medical facilities, commercial properties, and condominium communities throughout Connecticut. Our experienced crews and specialized equipment allow us to safely handle everything from routine maintenance to large and complex tree removals.

City of Bristol – Bristol, CT

Paulo Landscaping & Tree Removal LLC is currently under a contract with the City of Bristol to provide on-call tree removal and pruning services. This contract demonstrates our ability to provide dependable and professional municipal tree services as needed by the City.

Contract Term: July 2026 – July 2027

Performance: Current ongoing contract; work is being performed within required timeframes and budget.

Town of Orange – Orange, CT

We have performed municipal tree services for the Town of Orange, including large tree removals and crane-assisted removals. Our crews utilize specialized equipment to safely and efficiently complete challenging tree work on municipal property.
Contact: Donald Foyer, Public Works – (203) 215-4799

Dates: 2020-2024

Performance: Ongoing relationship; services have been completed within required timeframes and budgets.

University of New Haven – West Haven, CT

We provide tree services throughout the University of New Haven campus, including crane-assisted tree removals, hazardous tree removal, and pruning. Our work is performed with a strong focus on protecting students, staff, buildings, walkways, and surrounding campus property.
Contact: Matt Perrotti, Maintenance Supervisor – (203) 843-1065

Address: 300 Boston Post Road, West Haven, CT 06516
Dates: 2022- current

Performance: Ongoing relationship; services have been completed within required timeframes and budgets.

Yale Medical Facilities – New Haven & North Haven, CT

We provide tree services for Yale medical facilities at Long Wharf in New Haven and Devine Street in North Haven. Work has included hazardous tree removal around active medical properties, with a strong focus on safety, property protection, minimal disruption, and complete cleanup.
Contact: Joe Codey, Property Manager – (203) 430-0853

Address: 8 Devine Street, North Haven, CT 06473 & 1 Long Wharf Drive, New Haven CT

Dates: 2018- current

Performance: Ongoing relationship; services have been completed within required timeframes and budgets.

Lake Whitney Glen – Hamden, CT

We provide ongoing yearly tree services throughout Lake Whitney Glen condominium property. Services include tree removal, pruning, hazardous tree work, and general tree maintenance to help maintain a safe and well-kept property for residents.
Contact: Dominic, Property Manager – (203) 520-2214

Address: 365 Mather St, Hamden, CT 06514

Dates: 2021- current

Performance: Ongoing relationship; services have been completed within required timeframes and budgets.

These relationships demonstrate Paulo Landscaping & Tree Removal LLC's ability to safely and professionally perform tree work in active municipal, university, medical, commercial, and residential community environments while maintaining a high standard of safety, responsiveness, property protection, and quality workmanship.

2C. Personnel

Paulo Landscaping & Tree Removal LLC maintains experienced personnel capable of performing municipal tree removal, pruning, emergency response, crane-assisted removals, stump grinding, traffic/work-zone support, and related tree services.

Paulo Cardoso– Owner

Oversees company operations, field crews, project execution, safety, and quality control. More than 20 years of experience in the tree and property service industry.

Paul Cortes – Operations Manager

Bryant University Graduate. Responsible for estimating, scheduling, municipal and commercial accounts, crew coordination, client communication, project documentation, and daily operations.

Robert J. Herrington – Connecticut Licensed Arborist, S-4847

Provides professional arboricultural expertise and supports tree assessment, pruning, removal, and tree-care operations in accordance with applicable industry practices.

ORIGINAL

PAULO LANDSCAPING & TREE REMOVAL LLC

Tree Crew Personnel

Paulo Landscaping & Tree Removal LLC maintains experienced crew leaders, climbers, bucket operators, crane operators, equipment operators, grounds men, and support personnel capable of safely performing routine and complex tree-service operations.

Personnel Resumes

Paulo Cardoso – Owner

Paulo Cardoso is the founder and owner of Paulo Landscaping & Tree Removal LLC and has more than 22 years of experience in the tree service industry. Since founding the company in 2004, he has grown the business from one employee to more than 25 employees. Paulo oversees company operations, crews, estimating, project planning, safety, and overall quality of work.

Paul Cortes – Operations Manager

Paul Cortes has three years of experience with Paulo Landscaping & Tree Removal LLC and manages both the operational and administrative sides of the company. He is a graduate of Bryant University, where he studied Business Management. His responsibilities include estimating, scheduling, invoicing, project coordination, customer communication, bid paperwork, and daily operations.

Robert J. Herrington – Connecticut Licensed Arborist, S-4847

Robert J. Herrington has more than 15 years of experience as a licensed arborist. He assists with tree assessments, hazardous tree identification, pruning recommendations, and removal planning. Robert has also worked with the City of West Haven for several years, assisting with identifying and evaluating trees requiring removal.

2D. Conflict of Interest

Paulo Landscaping & Tree Removal LLC has **no known conflicts of interest** that would affect our ability to perform services for the City of Waterbury.

ORIGINAL

PAULO LANDSCAPING & TREE REMOVAL LLC

3A. Statement of Qualifications

Paulo Landscaping & Tree Removal LLC has been providing professional tree services throughout Connecticut since 2004. As a family-owned company, we have built our business around doing quality work, responding when our clients need us, and having the right people and equipment to handle each job safely and efficiently.

We are fully licensed and insured and have experienced crews capable of handling everything from routine pruning and removals to hazardous trees, storm damage, stump grinding, and large crane-assisted removals. Our team includes experienced climbers, bucket operators, grounds men, equipment operators, crew leaders, and Connecticut Licensed Arborist.

One of our biggest strengths is our equipment. Our fleet includes multiple bucket trucks, a 90+ foot spider lift, chippers, stump grinders, log trucks, dump trucks, and our BIK 106 grapple crane. The grapple crane allows our crews to safely remove large and hazardous trees, including trees in difficult locations or around buildings and other sensitive properties. Having this equipment in-house allows us to send the proper crew and equipment for the job rather than relying heavily on outside subcontractors.

We currently provide tree services for municipalities, universities, medical facilities, condominium communities, and commercial properties throughout Connecticut. We also currently hold an on-call tree-service contract with the City of Bristol.

With more than 20 years in business, 350+ five-star Google reviews, experienced personnel, a Connecticut Licensed Arborist, specialized equipment, and proven municipal and commercial experience, Paulo Landscaping & Tree Removal LLC has the resources and experience to provide the City of Waterbury with safe, responsive, and dependable tree services.

3B. Work Plan

Paulo Landscaping & Tree Removal LLC will provide the City of Waterbury with a responsive and organized approach to all requested tree work. Once a work request is received, our management team will review the scope, location, safety concerns, and equipment needed and assign the appropriate crew for the project.

For each project, we will mobilize the personnel and equipment necessary to complete the work safely and efficiently. Depending on the job, this may include bucket trucks, our spider lift, chippers, stump grinders, log trucks, or our BIK 106 grapple crane for large, hazardous, or difficult removals.

Safety will remain a priority throughout every project. Our crew will evaluate surrounding buildings, roadways, pedestrians, vehicles, utilities, and other potential hazards before beginning work. When necessary, work areas will be secured, and traffic and pedestrian access will be controlled to maintain a safe job site.

Tree removal and pruning will be performed by experienced personnel with oversight available from our Connecticut Licensed Arborist. Our crews will work efficiently while taking appropriate measures to protect City property and surrounding areas.

Upon completion, all logs, branches, chips, and tree-related debris generated by our work will be removed as required, and the work area will be left clean and safe.

For emergency tree work and storm-related situations, Paulo Landscaping & Tree Removal LLC has the crew, trucks, specialized equipment, and experience necessary to mobilize quickly and assist the City with hazardous conditions.

3C. Services Expected of the City

Paulo Landscaping & Tree Removal LLC would require the City of Waterbury to provide the location and scope of each requested project, a designated City contact, reasonable access to the work area, and any known information regarding utilities, traffic concerns, property restrictions, or other site-specific conditions.

Our company will provide supervision, experienced personnel, safety measures, equipment, and resources necessary to complete the requested tree services.

---

4. Cost Schedule

The completed Price Proposal is submitted separately in a sealed envelope marked "Confidential: Price Proposal," in accordance with RFP #8890.

---

5. Failure to Complete Work, Default and Litigation

a. Have you ever failed to complete any work awarded to you?
No.

b. Have you ever defaulted on a contract?
No.

c. Is there any pending litigation which could affect your organization's ability to perform this agreement?
No.

d. Has your firm ever had a contract terminated for cause within the past five years?
No.

e. Has your firm been named in a lawsuit related to errors and omissions within the past five years?
No.

f. During the past seven years, has your firm ever filed for protection under the Federal bankruptcy laws?
No.

g. Are there any other factors or information that could affect your firm's ability to provide the services being sought about which the city should be aware?
No.

---

6. Exceptions and Alternatives

Paulo Landscaping & Tree Removal LLC does not take any exceptions to the requirements of RFP #8890 at this time.

---

7. Additional Data

Paulo Landscaping & Tree Removal LLC has been serving Connecticut since 2004 and has built a strong reputation for safe, dependable, and high-quality tree services. Our experienced personnel, Connecticut Licensed Arborist, specialized equipment, municipal and commercial experience, and ability to handle both routine and complex tree work allow us to provide the City of Waterbury with a reliable and responsive on-call tree service partner.

ORIGINAL

PAULO LANDSCAPING & TREE REMOVAL LLC

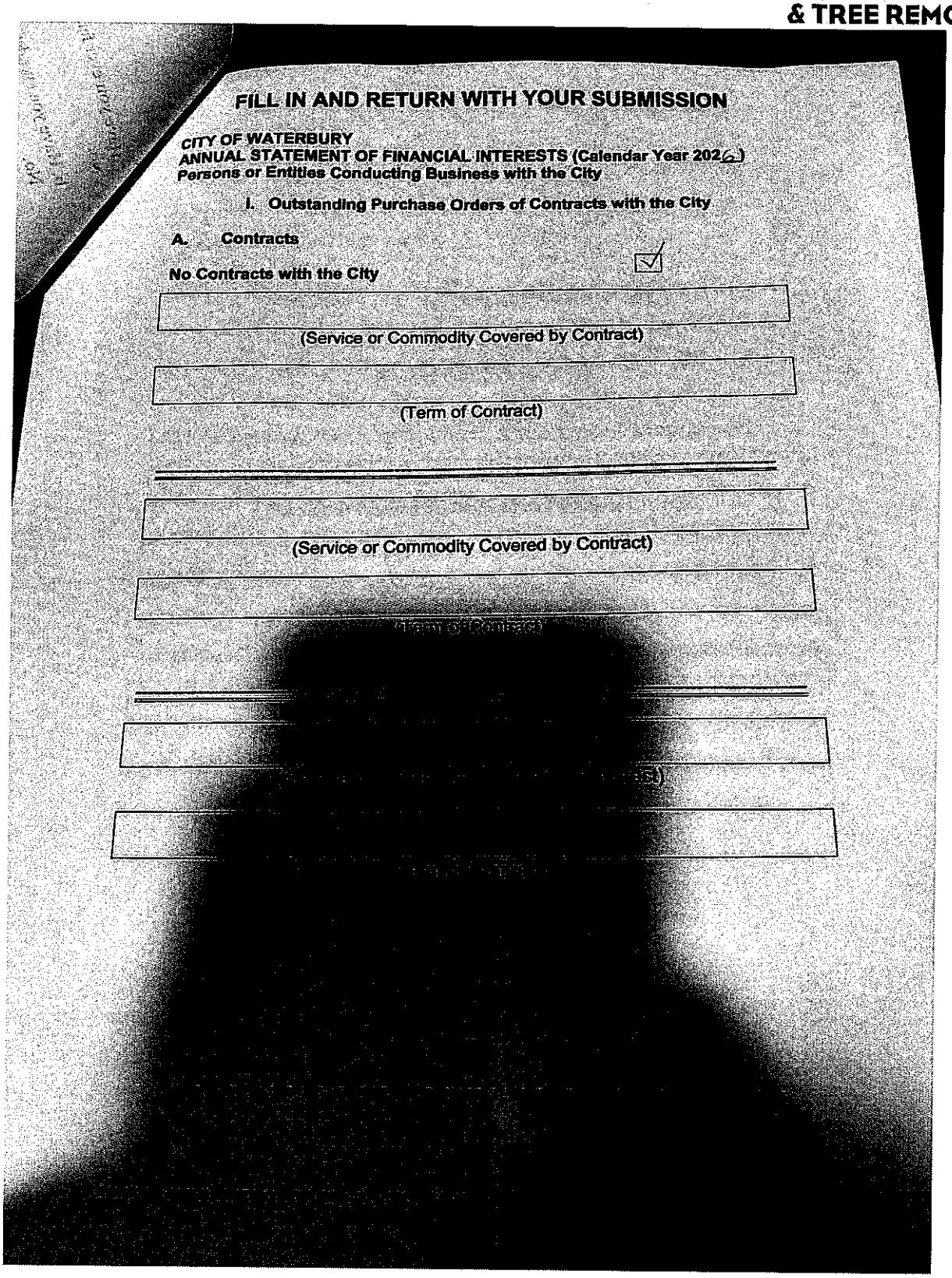

FILL IN AND RETURN WITH YOUR SUBMISSION

CITY OF WATERBURY
ANNUAL STATEMENT OF FINANCIAL INTERESTS (Calendar Year 2026)
Persons or Entities Conducting Business with the City

I. Outstanding Purchase Orders of Contracts with the City

A. Contracts

No Contracts with the City ☑

(Service or Commodity Covered by Contract)

(Term of Contract)

(Service or Commodity Covered by Contract)

(Term of Contract)

PAULO LANDSCAPING & TREE REMOVAL LLC

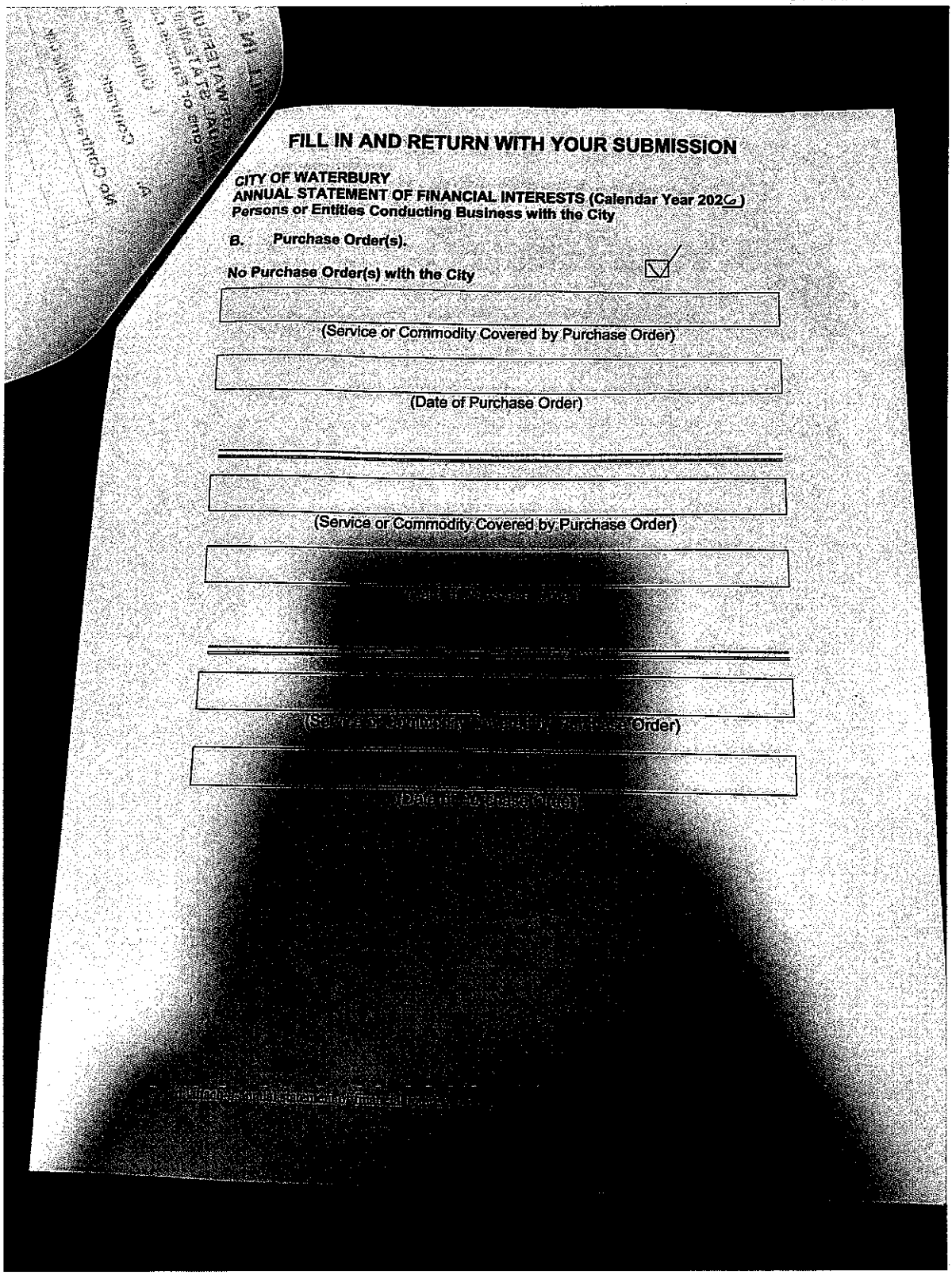

FILL IN AND RETURN WITH YOUR SUBMISSION

CITY OF WATERBURY
ANNUAL STATEMENT OF FINANCIAL INTERESTS (Calendar Year 202G)
Persons or Entities Conducting Business with the City

B. Purchase Order(s).

No Purchase Order(s) with the City ☑

(Service or Commodity Covered by Purchase Order)

(Date of Purchase Order)

(Service or Commodity Covered by Purchase Order)

(Date of Purchase Order)

ORIGINAL

PAULO LANDSCAPING & TREE REMOVAL LLC

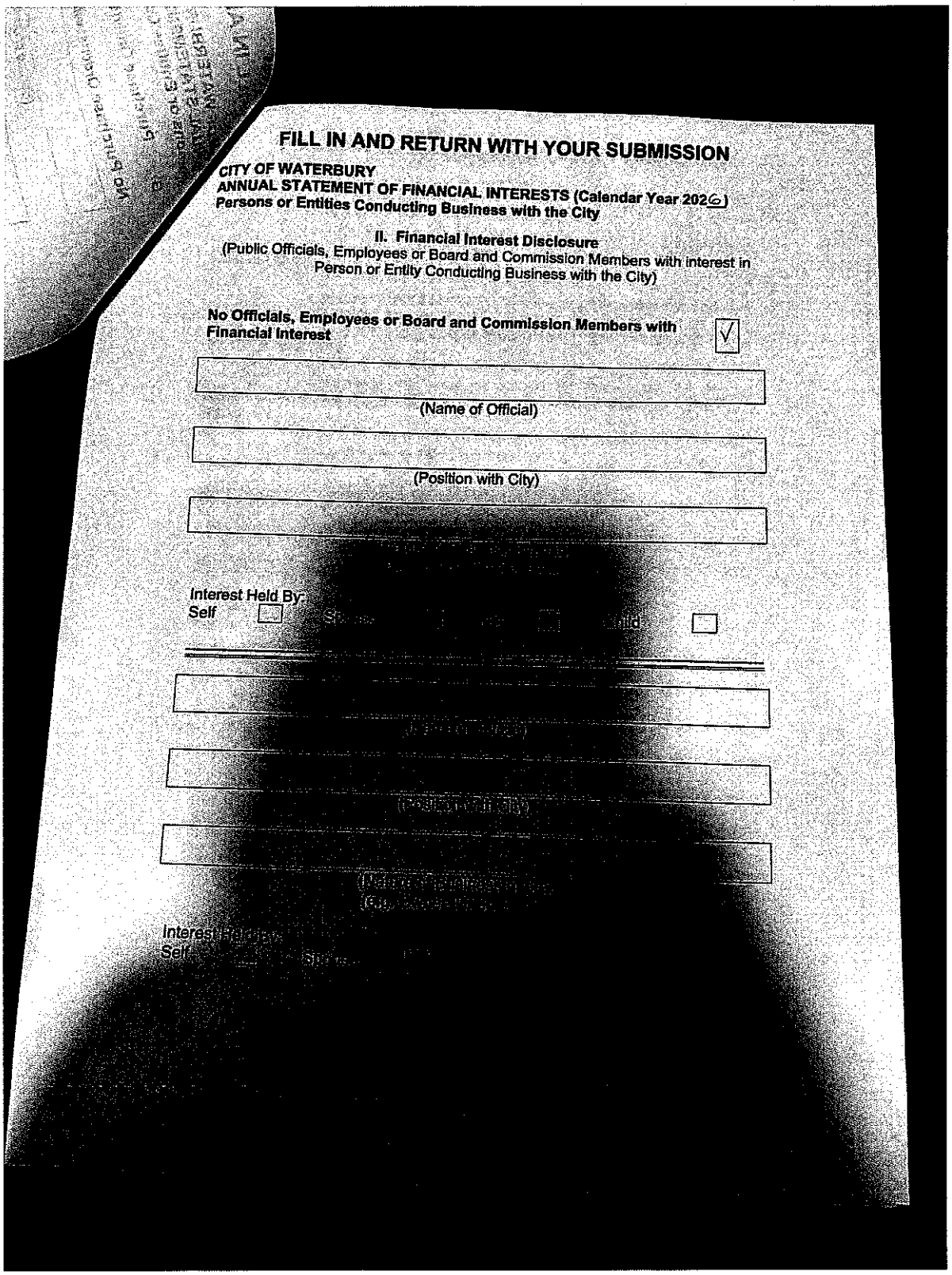

FILL IN AND RETURN WITH YOUR SUBMISSION

CITY OF WATERBURY
ANNUAL STATEMENT OF FINANCIAL INTERESTS (Calendar Year 2026)
Persons or Entities Conducting Business with the City

II. Financial Interest Disclosure
(Public Officials, Employees or Board and Commission Members with interest in Person or Entity Conducting Business with the City)

No Officials, Employees or Board and Commission Members with Financial Interest ☑

(Name of Official)

(Position with City)

Interest Held By:
Self ☐ Spouse ☐ Child ☐

ORIGINAL

PAULO LANDSCAPING & TREE REMOVAL LLC

FILL IN AND RETURN WITH YOUR SUBMISSION

1. I certify that this Annual Statement of Financial Interests is a complete and accurate statement of those matter required to be disclosed by me pursuant to §39.061 of the Code of Ordinances.

2. I understand that if I fail to file an Annual Statement (or amendment thereto) or an inaccurate Statement I will be in violation with Chapter 39 of the Code of Ordinance and, thereby, subject to the remedies set forth in §§38.71 and 39.101 of said Code.

3. I understand that I must file with the City Clerk, within fifteen (15) days following any reportable occurrence, any amendments to the Annual Statement.

I have read and agree to the above certification.

Paulo Landscaping & Tree Removal LLC
(Name of Company, if applicable)

[redacted] 2/13/2026
Signature of Individual (o[redacted]

Paul Corks [redacted]
Print or Type Name and [redacted]

DELIVERED [redacted]

PAULO LANDSCAPING & TREE REMOVAL LLC

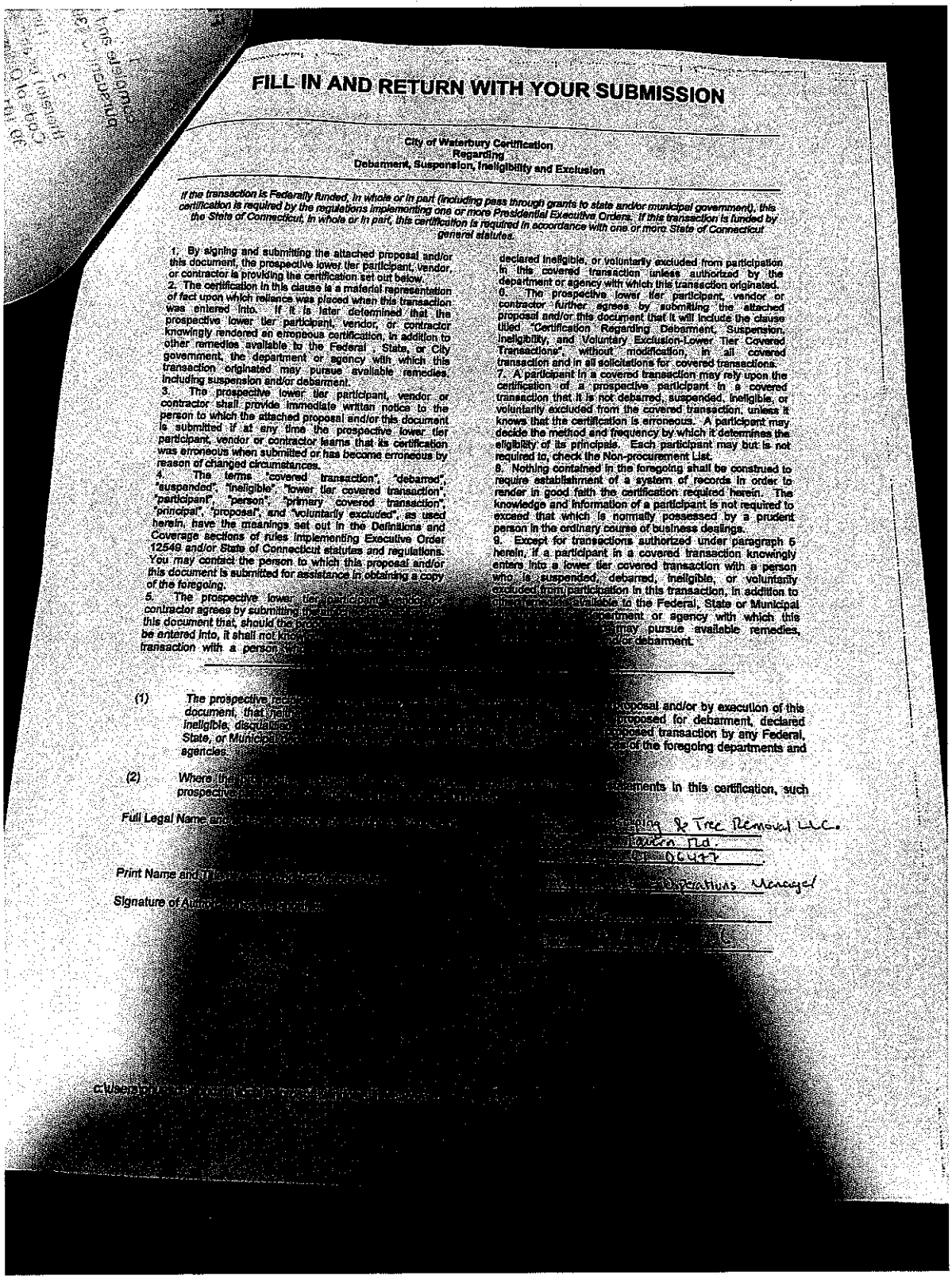

FILL IN AND RETURN WITH YOUR SUBMISSION

City of Waterbury Certification
Regarding
Debarment, Suspension, Ineligibility and Exclusion

If the transaction is Federally funded, in whole or in part (including pass through grants to state and/or municipal government), this certification is required by the regulations implementing one or more Presidential Executive Orders. If this transaction is funded by the State of Connecticut, in whole or in part, this certification is required in accordance with one or more State of Connecticut general statutes.

1. By signing and submitting the attached proposal and/or this document, the prospective lower tier participant, vendor, or contractor is provoking the certification set out below.
2. The certification in this clause is a material representation of fact upon which reliance was placed when this transaction was entered into. If it is later determined that the prospective lower tier participant, vendor, or contractor knowingly rendered an erroneous certification, in addition to other remedies available to the Federal , State, or City government, the department or agency with which this transaction originated may pursue available remedies, including suspension and/or debarment.
3. The prospective lower tier participant, vendor or contractor shall provide immediate written notice to the person to which the attached proposal and/or this document is submitted if at any time the prospective lower tier participant, vendor or contractor learns that its certification was erroneous when submitted or has become erroneous by reason of changed circumstances.
4. The terms "covered transaction", "debarred", "suspended", "ineligible", "lower tier covered transaction", "participant", "person", "primary covered transaction", "principal", "proposal", and "voluntarily excluded", as used herein, have the meanings set out in the Definitions and Coverage sections of rules implementing Executive Order 12549 and/or State of Connecticut statutes and regulations. You may contact the person to which this proposal and/or this document is submitted for assistance in obtaining a copy of the foregoing.
5. The prospective lower tier participant, vendor or contractor agrees by submitting the attached proposal and/or this document that, should the proposed covered transaction be entered into, it shall not knowingly enter into any lower tier covered transaction with a person who is
6. The prospective lower tier participant, vendor or contractor further agrees by submitting the attached proposal and/or this document that it will include the clause titled "Certification Regarding Debarment, Suspension, Ineligibility, and Voluntary Exclusion-Lower Tier Covered Transactions", without modification, in all covered transaction and in all solicitations for covered transactions.
7. A participant in a covered transaction may rely upon the certification of a prospective participant in a covered transaction that it is not debarred, suspended, ineligible, or voluntarily excluded from the covered transaction, unless it knows that the certification is erroneous. A participant may decide the method and frequency by which it determines the eligibility of its principals. Each participant may but is not required to, check the Non-procurement List.
8. Nothing contained in the foregoing shall be construed to require establishment of a system of records in order to render in good faith the certification required herein. The knowledge and information of a participant is not required to exceed that which is normally possessed by a prudent person in the ordinary course of business dealings.
9. Except for transactions authorized under paragraph 5 herein, if a participant in a covered transaction knowingly enters into a lower tier covered transaction with a person who is suspended, debarred, ineligible, or voluntarily excluded from participation in this transaction, in addition to other remedies available to the Federal, State or Municipal government, the department or agency with which this transaction originated may pursue available remedies, including suspension and/or debarment.

(1) The prospective [illegible] document, that neither it nor its principals is presently debarred, suspended, proposed for debarment, declared ineligible, disqualified or voluntarily excluded from participation in this proposed transaction by any Federal, State, or Municipal department or agency, and that it will not knowingly enter into any transaction with any of the foregoing departments and agencies.

(2) Where the prospective [illegible] exceptions in this certification, such

Full Legal Name and [illegible]: Paulo Landscaping & Tree Removal LLC.
[illegible] Western Rd.
[illegible] 06477

Print Name and Title: [illegible] Operations Manager

Signature of Authorized [illegible]

C:\Users\[illegible]

PAULO LANDSCAPING & TREE REMOVAL LLC

FILL IN AND RETURN WITH YOUR SUBMISSION

CITY OF WATERBURY
DISCLOSURE AND CERTIFICATION AFFIDAVIT REGARDING OUTSTANDING OBLIGATIONS TO THE CITY OF WATERBURY

For the purposes of this Disclosure of Outstanding Financial Obligations, the following definitions apply:

(a) "Contract" means any Public Contract as defined below.

(b) "Person" means one (1) or more individuals, partnerships, corporations, associations, or joint ventures.

(c) "Public Contract" means any agreement or formal commitment entered into by the city to expend funds in return for work, labor, services, supplies, equipment, materials or any combination of the foregoing, or any lease, lease by way of concession, concession agreement, permit, or per agreement whereby the city leases, grants or demises property belonging to the city, or otherwise grants a right of privilege to occupy or to use said property of the city.

(d) "City" means any official agency, board, authority, department office, or other subdivision of the City of Waterbury.

State of Connecticut

SS:

County of New Haven

Paulo C

sworn, deposes and say

being first duly

1. I am th

rative, agent or

Contractor that has sub

ractor's Name), the

2. I am fully

Agreement and of all

ments of the attached

ement;

3. That a

ck all that apply):

___ The

sentative, agent or

the

sonal property with

Gen

quired by Conn.

✓ Neither

sentative,

axable

and list,

✓ Neither

ive,

se

ORIGINAL

PAULO LANDSCAPING & TREE REMOVAL LLC

FILL IN AND RETURN WITH YOUR SUBMISSION

CITY OF WATERBURY
DISCLOSURE AND CERTIFICATION AFFIDAVIT REGARDING OUTSTANDING OBLIGATIONS TO THE CITY OF WATERBURY

√ Neither the Contractor nor any owner, partner, officer, representative, agent or affiliate of the Contractor either directly or through a lease agreement, has any other outstanding obligations to the City of Waterbury

4. The following list is a list of the names of all persons affiliated with the business of the Contractor, if none state none. Use additional sheet if necessary (Must be on company letterhead and notarized):

	Name	Title	Affiliated Company (if none state NONE)	Service or Material	DOB
1	Paulo Cardoso	Owner	[redacted]	Service	10/27/74
2			[redacted]		
3			Paulo Landscaping & Tree Removal LLC		
4					

5. That as a person desiring to contract with the City:

(a) The Contractor or an owner, partner, officer, representative, agent or affiliate of the Contractor provides, or has provided, services or materials to the City within one (1) year prior to the date of this disclosure, if none, state none. Use additional sheet if necessary (Must be on company letterhead and notarized):

	Name	[redacted]	Service or Material	DOB
1				
2				
3				
4				

(b) [redacted] business [redacted] (Must be on [redacted] sheet if necessary

	Organization Name
1	None
2	
3	
4	

(c) [redacted] Contractor [redacted] the corporation [redacted] the [redacted] ive

PAULO LANDSCAPING & TREE REMOVAL LLC

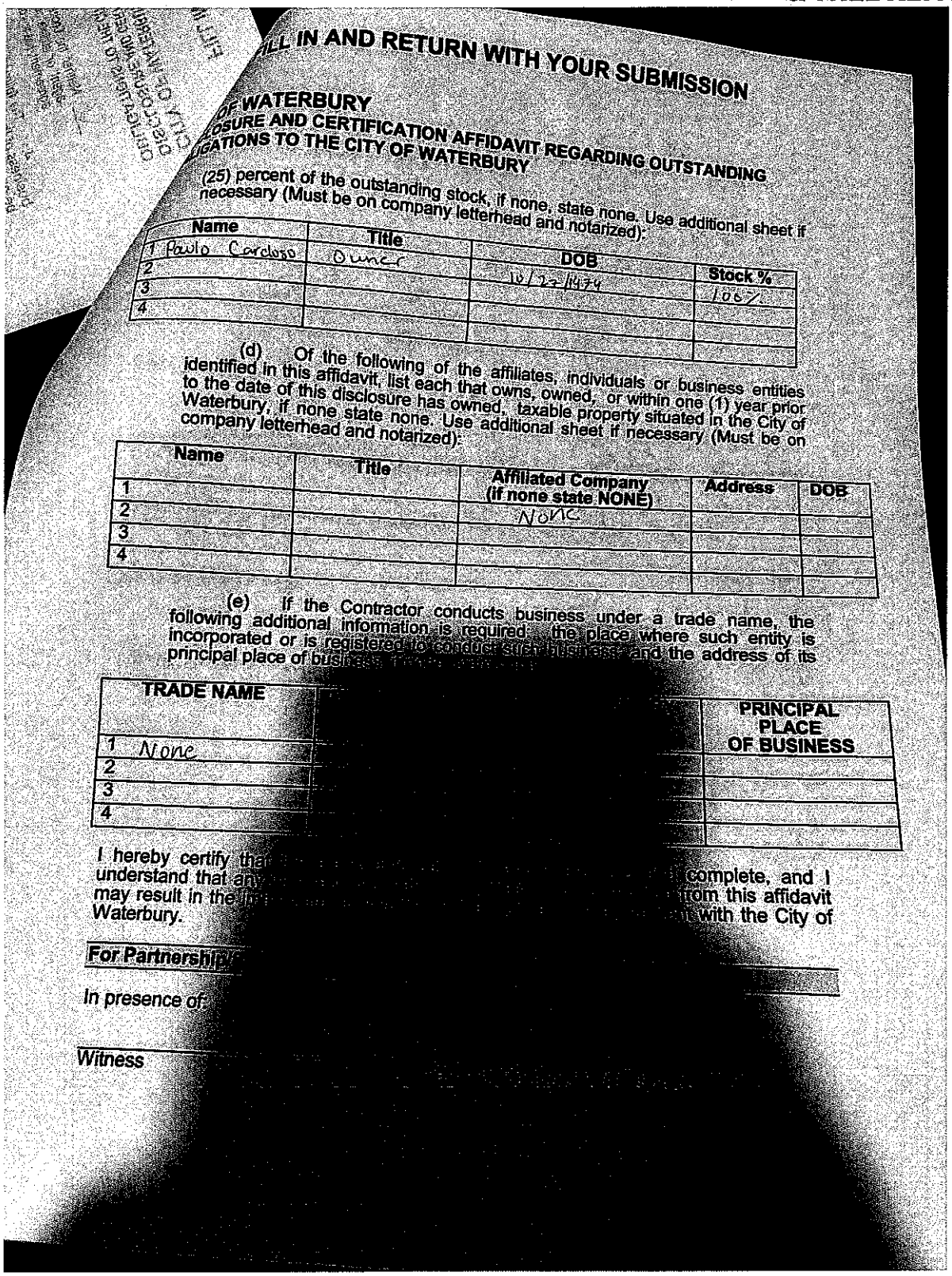

ILL IN AND RETURN WITH YOUR SUBMISSION

OF WATERBURY

LOSURE AND CERTIFICATION AFFIDAVIT REGARDING OUTSTANDING
IGATIONS TO THE CITY OF WATERBURY

(25) percent of the outstanding stock, if none, state none. Use additional sheet if necessary (Must be on company letterhead and notarized):

	Name	Title	DOB	Stock %
1	Paulo Cardoso	Owner	10/22/1974	100%
2				
3				
4				

(d) Of the following of the affiliates, individuals or business entities identified in this affidavit, list each that owns, owned, or within one (1) year prior to the date of this disclosure has owned, taxable property situated in the City of Waterbury, if none state none. Use additional sheet if necessary (Must be on company letterhead and notarized):

	Name	Title	Affiliated Company (if none state NONE)	Address	DOB
1					
2			None		
3					
4					

(e) If the Contractor conducts business under a trade name, the following additional information is required: the place where such entity is incorporated or is registered to conduct such business, and the address of its principal place of business.

	TRADE NAME	PRINCIPAL PLACE OF BUSINESS
1	None	
2		
3		
4		

I hereby certify that
understand that an
may result in the
Waterbury.

complete, and I
rom this affidavit
with the City of

For Partnership

In presence of:

Witness

ORIGINAL

PAULO LANDSCAPING & TREE REMOVAL LLC

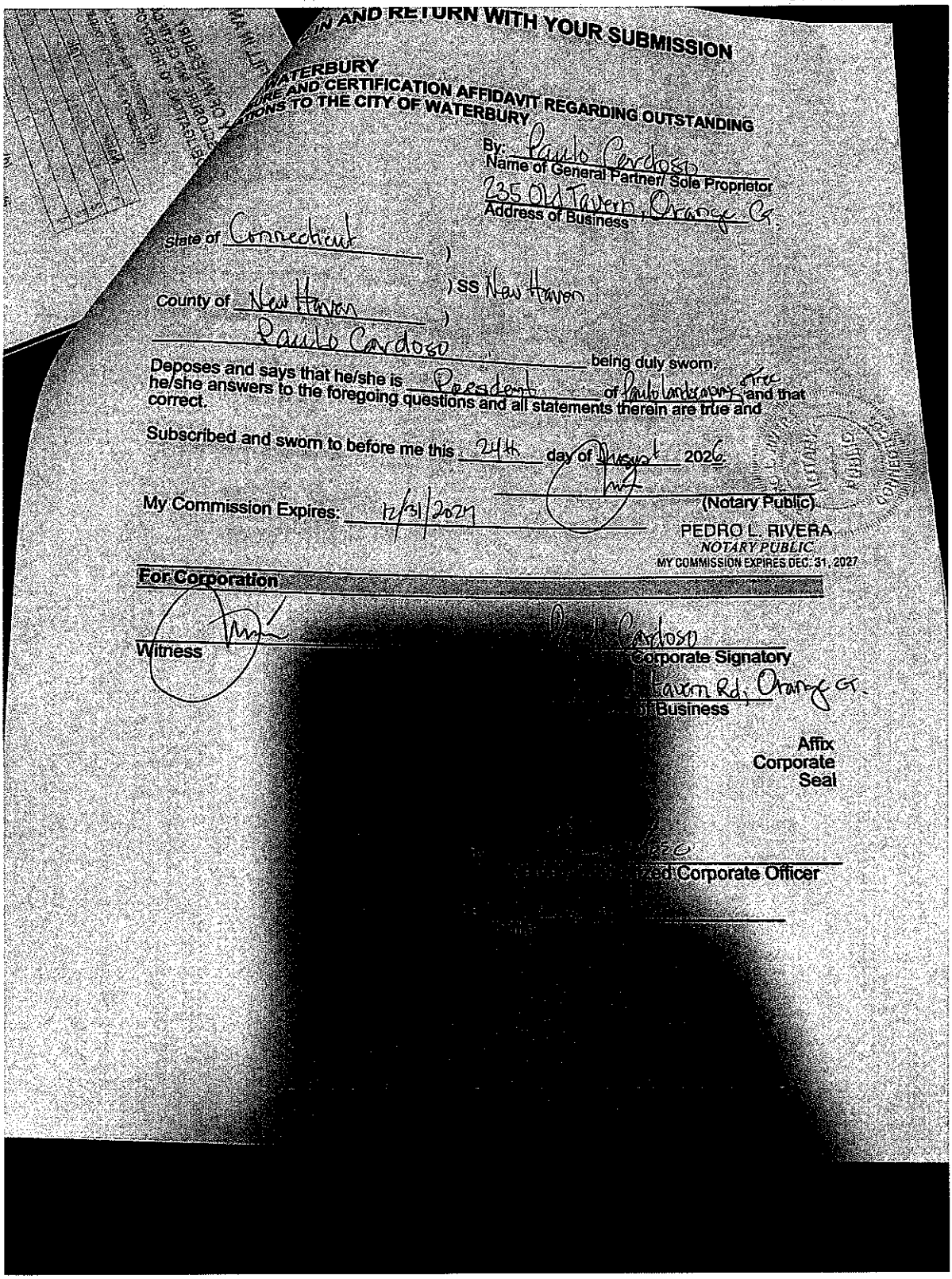

...N AND RETURN WITH YOUR SUBMISSION

...WATERBURY
...E AND CERTIFICATION AFFIDAVIT REGARDING OUTSTANDING
...ONS TO THE CITY OF WATERBURY

By: Paulo Cardoso
Name of General Partner/ Sole Proprietor
235 Old Tavern, Orange CT
Address of Business

State of Connecticut)
) SS New Haven
County of New Haven)

Paulo Cardoso being duly sworn,
Deposes and says that he/she is President of Paulo Landscaping & Tree and that he/she answers to the foregoing questions and all statements therein are true and correct.

Subscribed and sworn to before me this 24th day of August 2026

My Commission Expires: 12/31/2027

(Notary Public)
PEDRO L. RIVERA
NOTARY PUBLIC
MY COMMISSION EXPIRES DEC. 31, 2027

For Corporation

Witness

Paulo Cardoso
Corporate Signatory
...Tavern Rd, Orange CT
...Business

Affix
Corporate
Seal

...Corporate Officer

PAULO LANDSCAPING & TREE REMOVAL LLC

FILL IN AND RETURN WITH YOUR SUBMISSION

CITY OF WATERBURY
DISCLOSURE AND CERTIFICATION AFFIDAVIT REGARDING OUTSTANDING OBLIGATIONS TO THE CITY OF WATERBURY

State of Connecticut)
) SS New Haven
County of New Haven)

Paulo Cardoso being duly sworn,
deposes and says that he/she is President of Paulo Landscaping and Tree Removal and that he/she answers to the foregoing questions and all statements therein are true and correct.

Subscribed and sworn to before me this 24th day of August 2026

(Notary Public)

My Commission Expires: 12/31/2027

PEDRO L. RIVERA
NOTARY PUBLIC
MY COMMISSION EXPIRES

ORIGINAL

PAULO LANDSCAPING & TREE REMOVAL LLC

L IN AND RETURN WITH YOUR SUBMISSION

ATTACHMENT C

EVIN MC CAFFERY
DIRECTOR OF PURCHASING
235 GRAND STREET, ROOM 103
WATERBURY, CT 06702

The undersigned declares that the only persons or parties interested in this Proposal as principals are as stated; that the Proposal is made without any collusion with other persons, firms, or corporations; that Proposer has carefully examined the entire Request for Proposal; that Proposer has informed itself fully in regard to all conditions pertaining to the Work and the place where it is to be performed; and that with this representation, the undersigned makes this Proposal. These prices shall cover all expenses incurred in performing the Work required under the Contract Documents, of which this Proposal and Form are a part.

The undersigned agrees and covenants that the Contract Time shall commence on delivery of the City of Waterbury's written notice to proceed, which shall occur after contract execution by both parties.

The undersigned acknowledges receipt of addenda numbered: (insert date)

1 August 25, 2026 - #1 4 _____

2 _____ 5 _____

3 _____ 6 _____

All Work for this Project shall be performed at the Proposal Prices as described in the Proposal Documents.

The undersigned hereby certifies under [illegible] all respects bona fide, fair and made without collusion or [illegible] the work "person" shall mean any natural person, joint [illegible] legal entity.

27-2512925 _____

Social Security Number [illegible] rate Name
or Federal Identification Number

City notice of acceptance should be [illegible] poser at the following address:

Name [illegible]
By: [illegible]

Business Ad[illegible]

Phone: [illegible]
Email: [illegible]
Date: [illegible]

Note: If the Proposer is a corporation [illegible]
if a partnership, give full names and [illegible]

ORIGINAL

PAULO LANDSCAPING & TREE REMOVAL LLC

Attachment E

REQUEST FOR PROPOSAL #8890
BY
The City of Waterbury Public Works Department
On-Call Tree Services

(Must be submitted as part of Proposal in a separate sealed envelope, marked "Confidential: Price Proposal.")

Date: 8/13/2026

Kevin McCaffery
Director of Purchasing
City of Waterbury
235 Grand Street, Room 103
Waterbury, CT 06702

Sir:

Pursuant to and in compliance with [illegible] the undersigned

Paulo Landscaping
(Print or Type Company/Corporate

235 Old Tavern
(Print or Type Business Address)

CT, 06477

having carefully examined all [illegible] acknowledged on Attachment C, and having [illegible] and related requirements pertaining to the [illegible] and that with this representation, the undersi[illegible]

[Prop[illegible]

ORIGINAL

PAULO LANDSCAPING & TREE REMOVAL LLC

LIMITED LIABILTY COMPANY RESOLUTION

I, Paulo Cardoso, hereby certify that I am the duly authorized and acting Member/ Manager (circle one) of Paulo Landscaping & Tree Removal, a limited liability company organized and existing under the laws of the State of Connecticut, do hereby certify that the following facts are true and were taken from the records of said LLC.

The following resolution was adopted at a meeting of the LLC duly held on the 18th day of August, 2022.

"It is hereby resolved that Paulo Cardoso is authorized to make, execute and approve, on behalf of this LLC, any and all contracts or amendments thereof".

And I do further certify that the above resolution has not been in any way altered, amended, repealed and is now in full force and effect.

IN WITNESS WHEREOF, I have hereunto set my hand and affix the company seal of this LLC this 18th day of August.

Manager/Member

CERTIFICATE OF LIABILITY INSURANCE

DATE (MM/DD/YYYY): 09/23/2026

THIS CERTIFICATE IS ISSUED AS A MATTER OF INFORMATION ONLY AND CONFERS NO RIGHTS UPON THE CERTIFICATE HOLDER. THIS CERTIFICATE DOES NOT AFFIRMATIVELY OR NEGATIVELY AMEND, EXTEND OR ALTER THE COVERAGE AFFORDED BY THE POLICIES BELOW. THIS CERTIFICATE OF INSURANCE DOES NOT CONSTITUTE A CONTRACT BETWEEN THE ISSUING INSURER(S), AUTHORIZED REPRESENTATIVE OR PRODUCER, AND THE CERTIFICATE HOLDER.

IMPORTANT: If the certificate holder is an ADDITIONAL INSURED, the policy(ies) must have ADDITIONAL INSURED provisions or be endorsed. If SUBROGATION IS WAIVED, subject to the terms and conditions of the policy, certain policies may require an endorsement. A statement on this certificate does not confer rights to the certificate holder in lieu of such endorsement(s).

PRODUCER FEDERATED MUTUAL INSURANCE COMPANY HOME OFFICE: P.O. BOX 328 OWATONNA, MN 55060	CONTACT NAME: CLIENT CONTACT CENTER PHONE (A/C, No, Ext): 888-333-4949 FAX (A/C, No): 507-446-4664 E-MAIL ADDRESS: CLIENTCONTACTCENTER@FEDINS.COM
INSURED PAULO LANDSCAPING & TREE REMOVAL LLC 235 OLD TAVERN RD ORANGE, CT 06477-3430	INSURERS AFFORDING COVERAGE — NAIC # INSURER A: FEDERATED MUTUAL INSURANCE COMPANY — 13935 INSURER B: INSURER C: INSURER D: INSURER E: INSURER F:

COVERAGES — CERTIFICATE NUMBER: 1 — REVISION NUMBER: 0

THIS IS TO CERTIFY THAT THE POLICIES OF INSURANCE LISTED BELOW HAVE BEEN ISSUED TO THE INSURED NAMED ABOVE FOR THE POLICY PERIOD INDICATED. NOTWITHSTANDING ANY REQUIREMENT, TERM OR CONDITION OF ANY CONTRACT OR OTHER DOCUMENT WITH RESPECT TO WHICH THIS CERTIFICATE MAY BE ISSUED OR MAY PERTAIN, THE INSURANCE AFFORDED BY THE POLICIES DESCRIBED HEREIN IS SUBJECT TO ALL THE TERMS, EXCLUSIONS AND CONDITIONS OF SUCH POLICIES. LIMITS SHOWN MAY HAVE BEEN REDUCED BY PAID CLAIMS.

INSR LTR	TYPE OF INSURANCE	ADDL INSR	SUBR WVD	POLICY NUMBER	POLICY EFF (MM/DD/YYYY)	POLICY EXP (MM/DD/YYYY)	LIMITS	
A	X COMMERCIAL GENERAL LIABILITY CLAIMS-MADE [X] OCCUR GEN'L AGGREGATE LIMIT APPLIES PER: POLICY [X] PRO-JECT LOC OTHER:	Y	Y	1977784	10/01/2026	10/01/2027	EACH OCCURRENCE DAMAGE TO RENTED PREMISES (Ea occurrence) MED EXP (Any one person) PERSONAL & ADV INJURY GENERAL AGGREGATE PRODUCTS & COMP/OP AGG	$1,000,000 $100,000 EXCLUDED $1,000,000 $2,000,000 $2,000,000
A	AUTOMOBILE LIABILITY X ANY AUTO OWNED AUTOS ONLY [ ] SCHEDULED AUTOS HIRED AUTOS ONLY [ ] NON-OWNED AUTOS ONLY	Y	Y	1977784	10/01/2026	10/01/2027	COMBINED SINGLE LIMIT (Ea accident) BODILY INJURY (Per Person) BODILY INJURY (Per Accident) PROPERTY DAMAGE (Per Accident)	$1,000,000
A	X UMBRELLA LIAB [X] OCCUR EXCESS LIAB [ ] CLAIMS-MADE DED RETENTION	Y	Y	1977788	10/01/2026	10/01/2027	EACH OCCURRENCE AGGREGATE	$1,000,000 $1,000,000
A	WORKERS COMPENSATION AND EMPLOYERS' LIABILITY ANY PROPRIETOR/PARTNER/ EXECUTIVE OFFICER/MEMBER EXCLUDED? Y/N [ ] (Mandatory in NH) If yes, describe under DESCRIPTION OF OPERATIONS below	N/A	Y	1977787	10/01/2026	10/01/2027	X PER STATUTE OTHER E.L. EACH ACCIDENT E.L. DISEASE - EA EMPLOYEE E.L. DISEASE - POLICY LIMIT	 $500,000 $500,000 $500,000

DESCRIPTION OF OPERATIONS / LOCATIONS / VEHICLES (ACORD 101, Additional Remarks Schedule, may be attached if more space is required)

SEE ATTACHED PAGE

CERTIFICATE HOLDER

CITY OF WATERBURY
526 HUNTINGDON AVE
WATERBURY, CT 06708-1421

10

CANCELLATION

SHOULD ANY OF THE ABOVE DESCRIBED POLICIES BE CANCELLED BEFORE THE EXPIRATION DATE THEREOF, NOTICE WILL BE DELIVERED IN ACCORDANCE WITH THE POLICY PROVISIONS.

AUTHORIZED REPRESENTATIVE

Nicholas R. Zaccaro

© 1988-2015 ACORD CORPORATION. All rights reserved.
The ACORD name and logo are registered marks of ACORD

Attachment E

REQUEST FOR PROPOSAL #8890
BY
The City of Waterbury Public Works Department
On-Call Tree Services

(Must be submitted as part of Proposal in a separate sealed envelope, marked "Confidential: Price Proposal.")

Date: 8/18/2026

Kevin McCaffery
Director of Purchasing
City of Waterbury
235 Grand Street, Room 103
Waterbury, CT 06702

Sir:

Pursuant to and in compliance with your RFP, the Undersigned,

Paulo Landscaping & Tree Removal LLC
(Print or Type Company/Corporate Name)

235 Old Tavern Rd., Orange
(Print or Type Business Address)

CT, 06477

having carefully examined all the RFP Documents, together with all Addenda, as acknowledged on Attachment C, and having informed itself fully in regard to all conditions and related requirements pertaining to the performance of services required under this RFP; and that with this representation, the undersigned makes this Proposal, as follows:

[Proposal continued on following page(s)]

REQUEST FOR PROPOSAL #8890
BY
The City of Waterbury
Public Works Department On-Call Tree Services

Price Proposal

Description of Service	Regular Rate	Emergency Rate
Pruning and Tree Removal (Includes a crew chief, climber & grounds man, 10 cubic yard box truck & chipper and 60' aerial lift	$ ~~2[illegible]~~ 299/hr.	$ 365 /hr.
Ground Cleanup (includes a crew chief and a ground man, 10 cubic yard box truck & chipper)	$ 175 /hr.	$ 285 /hr.

Additional Required Pricing Information: These rates will be used to add to or subtract from "crew rates" where man power is otherwise inconsistent with these specifications

Description of Service	Regular Rate	Emergency Rate
Crew Chief/Bucket Operator	$ 150 /hr.	$ 185 /hr.
Climber	$ 130 /hr.	$ 165 /hr.
Grounds Men	$ 65 /hr.	$ 95 /hr.
Flag Man	$ 55 /hr.	$ 85 /hr.
EQUIPMENT	Regular Rate	Emergency Rate
Aerial Lift- 70ft w/ working distance	$ 155/hr.	$ 185/hr.
Chipper & 10 yard Box Truck	$ 125/hr.	$ 155/hr.

REQUEST FOR PROPOSAL #8890
BY
The City of Waterbury
Public Works Department On-Call Tree Services

Price Proposal continued

Whole Tree Chipper- 14" log capacity	$ 255/hr.	$ 300/hr.
Stump Grinder	$ 175/hr.	$ 235/hr.
Crane	$ 325/hr.	$ 450/hr.
Multi loader/articulating loader with grapple and winch	$ 175/hr.	$ 250/hr.

27-2512425
Social Security Number
or Federal Identification Number

Signature of Individual or
Corporate Name

Pavlo Landscaping & Tree Removal LLC.
Company Name

Corporate Officer
(if applicable)

By: Pavlo Cardoso
(Title)
235 Old Tavern Rd.
(Business Address)
Orange, CT, 06477
(City, State, Zip Code)

Date: 8/24/26

Email: pavlolandscaping@yahoo.com

END OF ATTACHMENT E

SPECIAL CONDITIONS

INDEX TO SPECIAL CONDITIONS

ARTICLE		PAGE
1.	SPECIAL NOTE	SC-1
2.	PERMITS	SC-1
3.	CONSTRUCTION STAKE OUT	SC-1
4.	SITE RESTORATION	SC-1
5.	CITY NOTIFICATION – BACKFILLING	SC-1
6.	PUBLIC USE OF EXISTING PUBLIC FACILITIES	SC-1
7.	ACCESS TO PRIVATE & PUBLIC PROPERTY	SC-1
8.	WINTER SHUTDOWN	SC-2
9.	OWNER CONTROLLED CONTINGENCY ALLOWANCE	SC-2
10.	CHANGES TO THE WORK	SC-2
11.	LAYDOWN AREAS / MATERIAL STORAGE	SC-2
12.	ADDENDUM TO GENERAL CONDITION ARTICLES 11 & 95	SC-3
13.	ADDENDUM TO GENERAL CONDITIONS ARTICLE 1	SC-3
14.	CITY DESIGN STANDARDS, SPECIFICATIONS AND DETAILS	SC-3
15.	ADDENDUM TO GENERAL CONDITIONS ARTICLE 2	SC-3
16.	ADDENDUM TO GENERAL CONDITION ARTICLE 8, 9, 10	SC-3
17.	MOBILIZATION AND DEMOBILIZATION	SC-3
18.	IMPROVEMENT LOCATION AND TOPOGRAPHICAL SURVEY	SC-3
19.	ADDENDUM TO GENERAL CONDITION ARTICLE 93	SC-3
20.	INTENT OF DRAWINGS	SC-3
21.	ADDENDUM TO GENERAL CONDITION ARTICLES 31	SC-3
22.	ADDENDUM TO GENERAL CONDITIONS	SC-4

ARTICLE 1. SPECIAL NOTE

These Special Conditions shall be subject to all requirements of the Contract, amend or supplement the General Conditions, and modify all Contract Documents which follow them numerically, as set forth in Section 1.2 of the Contract. The terms used in these Special Conditions which are defined in the Contract or General Conditions have the meanings assigned to them in said documents. All provisions of the General Conditions which are not so amended or supplemented remain in full force and effect.

This section applies equally and specifically to all contractors supplying labor and/or equipment and/or materials for this Project; and to all of the Contract Documents. All Contract Documents apply to this Section. Where items of the Contract are repeated, it is intended to call particular attention to or qualify them; it is not intended that any other parts of the Contract shall be assumed to be omitted if not repeated herein.

Unless expressly provided for otherwise, and regardless if not expressly stated in each Article herein, the costs associated with all work and/or services required under the Special Conditions shall be considered as included in the overall cost of the Contract items. No separate or additional payment will be made for this work and/or services.

ARTICLE 2. PERMITS

The Contractor shall obtain all applicable Federal, State and local permits and registrations necessary to complete the project at no additional cost to the City. The cost of obtaining and maintaining the permits shall be included in the Contract Amount.

The Contractor shall give all notices and comply with all laws, ordinances, rules and regulations including building and fire safety codes relating to the performance of the Work.

ARTICLE 3. CONSTRUCTION STAKE OUT - NOT USED

ARTICLE 4. SITE RESTORATION

The Contractor will blend the new work into the existing ground surface and replace any adjacent disturbed materials that may have been damaged or irregular do to construction and/or new installations.

ARTICLE 5. CITY NOTIFICATION - BACKFILLING

Before backfilling any excavated area and after an improvement has been installed the contractor shall notify the City when a backfill operation is to occur. A City representative will make one observation for each excavated area.

ARTICLE 6. PUBLIC USE OF EXISTING PUBLIC FACILITIES

The Contractor shall limit his work area to the site of the construction and its immediate vicinity. No equipment or construction activities are allowed on the existing public facilities, such as athletic fields without prior written approval by the City. No equipment or storage is allowed outside of the designated construction area without prior written approval by the City. The number and location(s) of storage containers shall be approved by the City.

ARTICLE 7. ACCESS TO PRIVATE & PUBLIC PROPERTY

Throughout the duration of Construction, the Contractor shall maintain access to all businesses, places of worship, schools and private residences, etc. in the project area. Particular attention is noted for funeral processions, wedding processions, and other similar activities.

Where required by the City, Contractor shall also conduct regular coordination meetings with Residents, Owners and Operators of businesses and other operations to coordinate active work periods.

Contractor shall also provide and place temporary ramps at driveways or other locations where, in the opinion of the City, there is a need to provide safe access until the permanent handwork is completed.

ARTICLE 8. WINTER SHUTDOWN

No 'winter shutdown' will be permitted for this Project.

Any 'winter shutdown' authorized under this Article shall not change the "Contract Time" for the project. Any extension of the Contract Time must be by formal amendment to the Contract in accordance with the provisions of the Procurement Ordinance of the City of Waterbury.

ARTICLE 9. OWNER CONTROLLED CONTINGENCY ALLOWANCE

If an Owner Controlled Contingency Allowance ("OCCA") has been provided in the Contract, it is to provide an account for certain expenditures found necessary by and ordered done by the City. This item shall include any unforeseen work made necessary by changes in the plans or necessitated by site conditions. Work for which payment is included under other items shall not be considered for inclusion under this item.

Use of the OCCA requires the City's advance written authorization. Determination of amounts to be paid for work under this item shall be in accordance with Article 10 of the Special Conditions and at the sole discretion of the City.

Determination of amounts to be paid for work under this Article shall be agreed to in advance by the Contractor and City and shall not exceed amounts established in the OCCA. At project closeout, unused amounts remaining in the allowance shall be credited to the City by Final Change Order (as part of and so documented in Contractor's final payment request).

In no instance shall payments made pursuant to this Article result in an increase in the amount of the Contract Total Compensation or extension of Contract Time. Any increase above the Contract Total Compensation or Contract Time resulting from utilization of this Article must be by a duly authorized and executed Contract amendment in accordance with Section 27 of the Contract.

ARTICLE 10. CHANGES TO THE WORK

If the City authorizes changes to the work, the following shall apply:

The cost for changes to the work shall be either on a firm proposal agreed to by the City or based on a cost-plus-fee basis agreeable to the City. In the event the work is to be performed on a cost plus basis, the Contractor will perform, or cause to be performed by his subcontractors, such work at direct cost, plus the percentages set out below:

1. For work performed by the Contractor's own forces, direct cost plus Ten Percent (10 %).
2. For work performed by a subcontractor, the cost to the City shall be subcontractor cost to the Contractor, plus 5 %.

ARTICLE 11. LAYDOWN AREAS / MATERIAL STORAGE

A Laydown Area shall not impede traffic flow within the City streets. The Contractor may use these areas during construction and shall be required to restore any disturbed areas to a condition as good as or better than existing conditions.

Contractor shall also be required to clean up, restore, and make safe and usable all Laydown Areas as directed by the Engineer. This may include removing equipment, materials, tools, etc., from the any Laydown Area for a period to be determined by the City of Waterbury.

The City will not provide any staging area for Construction and/or Contractor operations. The Contractor shall provide its own staging/storage area. Lay down areas within the project's limits are allowed but require pre-approval from the City. In all cases, the Contractor shall be responsible for the protection of all materials, tools, etc. Materials received on site which are not immediately installed shall be carefully and securely stored. All materials used throughout work shall be neatly stacked so as not to obstruct the progress of the work or endanger the public, adjacent property owners and tenants or the City.

The Contractor shall provide its own storage facilities and in all cases be responsible for the protection of all materials, tools, etc. The number and location(s) of storage containers shall be approved by the City. Materials received on site which are not immediately installed shall be carefully and securely stored. All materials used throughout work shall be neatly stacked so as not to obstruct the progress of the work or endanger the public or the City or City's employees or tenants. All deliveries of material, equipment, etc., shall be made to the Contractor and accepted only by him/her and only during working hours. City personnel will not receive or accept any materials or equipment, etc. at any time.

ARTICLE 12. ADDENDUM TO GENERAL CONDITIONS 11 and 95
Reference is made to General Condition Articles 11 – Temporary Utilities, and 95 – Temporary Water Supply. The Contractor shall be responsible for determining and supplying at no cost to the City all temporary utilities needed to maintain utility service to all adjacent property owners/tenants.

ARTICLE 13. ADDENDUM TO GENERAL CONDITIONS ARTICLE 1 – NOT USED

ARTICLE 14. CITY DESIGN STANDARDS, SPECIFICATIONS AND DETAILS – NOT USED

ARTICLE 15. ADDENDUM TO GENERAL CONDITIONS ARTICLE 2 – NOT USED

ARTICLE 16. ADDENDUM TO GENERAL CONDITIONS 8, 9 and 10
Reference is made to General Condition Article 8 – Sedimentation and Erosion Control, Article 9 – Protection of Environmental Resources and Article 10 - Environmental Protection Plan. The requirements of Articles 8, 9 and 10 shall not apply to this project; however, the Contractor shall responsible for any such requirements to the extent set forth in the Technical Specifications or elsewhere in the Contract Documents.

ARTICLE 17. MOBILIZATION AND DEMOBILIZATION
The costs of Mobilization and Demobilization for the project shall be included in the contract bid amount. No separate payment shall be made for Mobilization and/or Demobilization.

ARTICLE 18. IMPROVEMENT LOCATION AND TOPOGRAPHICAL SURVEY
Completion of an Improvement Location Survey is not required for this Project.

ARTICLE 19. ADDENDUM TO GENERAL CONDITIONS 93
In lieu of the daily reports required in Article 93 of the general conditions, the contractor shall provide said reports as provided in any issued applicable Task Orders.

ARTICLE 20. INTENT OF DRAWINGS - NOT USED

ARTICLE 21. ADDENDUM TO GENERAL CONDITION 31
Reference is made to General Condition Article 31 – Use of Premises and Removal of Debris. During the progress of the work, the Contractor shall keep the construction areas in a neat condition, free from accumulations of waste materials and rubbish. Lunch papers, bottles, lumber cut-offs, drinking cups and like rubbish shall be removed from the site daily. No alcoholic beverages will be permitted at the construction site(s).

On or before the completion of the work and before acceptance and final payment shall be made, the Contractor shall clean and remove, from the site and adjacent property all surplus and discarded materials, rubbish, and temporary structures and restore, in an acceptable manner, all property and leave the whole area in a neat and presentable condition.

ARTICLE 22. ADDENDUM TO GENERAL CONDITIONS
The following General Conditions Articles are not applicable to this RFP8388:

General Conditions Articles 1-4, 10, 15-17, 36, 44, 46-47, 53-54, 76-78, 84, 90, 94, 102, 105, 108, 109, and 113.

END OF SECTION

RFP # 8890

GENERAL CONDITIONS

INDEX TO GENERAL CONDITIONS

ARTICLE	TITLE	PAGE
1.	PLANS AND SPECIFICATIONS AT THE SITE	GC-1
2.	CONSTRUCTION PROGRESS SCHEDULE	GC-1
3.	ESTIMATED QUANTITIES	GC-2
4.	SCHEDULE OF VALUES; APPLICATION FOR PAYMENT	GC-2
5.	PARTIAL PAYMENTS	GC-2
6.	INSPECTION AND TESTS	GC-3
7.	UTILITIES	GC-3
8.	SEDIMENTATION AND EROSION CONTROL	GC-3
9.	PROTECTION OF ENVIRONMENTAL RESOURCES	GC-4
10.	ENVIRONMENTAL PROTECTION PLAN	GC-5
11.	TEMPORARY UTILITIES	GC-5
12.	ABBREVIATIONS	GC-5
13.	SUBSURFACE EXPLORATION	GC-7
14.	CONTRACT AND CONTRACT DOCUMENTS	GC-7
15.	SHOP DRAWINGS, CATALOG CUTS AND SAMPLES	GC-7
16.	CONTRACTOR'S TITLE TO MATERIALS	GC-8
17.	"OR EQUAL" CLAUSES	GC-8
18.	REPRESENTATIONS OF THE CONTRACTOR	GC-8
19.	PROTECTION OF WORK AND PROPERTY (EMERGENCY)	GC-9
20.	WEATHER CONDITIONS	GC-9
21.	SUBLETTING	GC-9
22.	SUBSTITUTE BOND	GC-10
23.	RIGHT TO WITHHOLD PAYMENTS	GC-10
24.	PAYMENTS BY CONTRACTOR	GC-10
25.	NOTICE OF WARNING	GC-10
26.	PROGRESS MEETINGS.	GC-10
27.	PERMITS	GC-10
28.	RIGHT TO USE THE WORK	GC-11
29.	PROVISIONS REQUIRED BY LAW	GC-11
30.	WAIVER	GC-11
31.	USE OF PREMISES AND REMOVAL OF DEBRIS	GC-11
32.	RIGHT OF WAY AND SUSPENSION OF WORK	GC-11
33.	CONSTRUCTION EQUIPMENT AND MACHINERY	GC-12

INDEX TO GENERAL CONDITIONS

ARTICLE	TITLE	PAGE
34.	GENERAL GUARANTEE	GC-12
35.	PROCEDURE IN CONSTRUCTION	GC-13
36.	APPRENTICES	GC-13
37.	CONTROL OF WORK	GC-13
38.	CITY'S CONTROL NOT LIMITED	GC-13
39.	AUTHORITY AND DUTIES OF INSPECTORS	GC-13
40.	INSPECTION AND CORRECTION OF WORK	GC-14
41.	CONTRACTOR'S OBLIGATIONS	GC-14
42.	TOILET ACCOMMODATIONS AND DRINKING WATER	GC-15
43.	SAFETY AND HEALTH REGULATIONS	GC-15
44.	OWNERSHIP OF DRAWINGS AND SPECIFICATIONS	GC-15
45.	RESIDENTS' PREFERENCE IN WORK ON OTHER PUBLIC FACILITIES	GC-15
46.	LISTING OF EMPLOYMENT OPENINGS	GC-15
47.	SERVICE OF PROCESS	GC-16
48.	CITY OF WATERBURY ORDINANCE CHAPTER 34	GC-16
49.	WAGE RATES	GC-16
50.	SCHEDULE AND POSTING OF MINIMUM WAGE RATES	GC-16
51.	COMPUTATION OF WAGES AND OVERTIME COMPENSATION	GC-17
52.	WAGE UNDERPAYMENTS AND ADJUSTMENTS	GC-17
53.	CONFORMANCE OF WORK	GC-17
54.	DIMENSIONS AND SCHEDULES	GC-17
55.	PROTECTION FROM STORM	GC-17
56.	PROTECTION OF WORK AND MATERIALS	GC-17
57.	FURTHER SAFEGUARDS	GC-17
58.	FIRST AID TO INJURED	GC-18
59.	CONFORMANCE WITH DIRECTIONS	GC-18
60.	COMPETENT HELP TO BE EMPLOYED	GC-18
61.	STREETS AND SIDEWALKS TO BE KEPT OPEN	GC-18
62.	LIGHTS, BARRIERS, FENCES, WATCHMEN & INDEMNITY	GC-18
63.	WORK OUTSIDE REGULAR HOURS	GC-19
64.	BUS LINE INTERFERENCE	GC-19
65.	COLD WEATHER WORK	GC-19
66.	BLASTING AND EXPLOSIVES	GC-19

INDEX TO GENERAL CONDITIONS

ARTICLE	TITLE	PAGE
67.	TUNNELING	GC-20
68.	RESERVED MATERIALS/EXCAVATED MATERIALS	GC-20
69.	OBSTRUCTIONS AND CROSSOVERS	GC-20
70.	DIRECTIONAL SIGNS AND LIGHTS	GC-21
71.	MAINTENANCE OF WORKPLACE	GC-21
72.	OPERATIONS AT SEVERAL POINTS	GC-21
73.	INTERFERENCE WITH EXISTING STRUCTURES	GC-21
74.	TURF, TOPSOIL AND OTHER REPLACEMENT ITEMS	GC-21
75.	MATERIALS	GC-21
76.	DEFECTIVE MATERIALS	GC-22
77.	INSPECTION AND TESTING OF FURNISHED MATERIALS.	GC-22
78.	SAMPLES AND ORDERING LISTS	GC-22
79.	SANITARY CONVENIENCES	GC-22
80.	FINISHING AND CLEANING UP	GC-22
81.	RIGHTS OF ACCESS	GC-23
82.	WORK BY OTHERS	GC-23
83.	WORK WITHIN THE LIMITS OF PRIVATE PROPERTY	GC-23
84.	LOADING	GC-24
85.	COMPLETION OF WORK	GC-24
86.	DUST AND SPILLAGE CONTROL	GC-24
87.	CARE OF THE WORK	GC-24
88.	EMERGENCY WORK	GC-24
89.	FIRE PREVENTION AND PROTECTION	GC-25
90.	PLANIMETER	GC-25
91.	SUPERINTENDENCE	GC-25
92.	CONTRACT ADMINISTRATION COSTS - OUTSIDE REGULAR HOURS	GC-25
93.	DAILY REPORTS	GC-25
94.	MATERIAL AND WORKMANSHIP	GC-25
95.	TEMPORARY WATER SUPPLY	GC-26
96.	FITTING AND COORDINATION OF WORK	GC-26
97.	ARCHEOLOGICAL FINDS	GC-26
98.	EXCAVATIONS NEAR UNDERGROUND UTILITIES	GC-26
99.	WATER QUALITY OF WELLS.	GC-27

INDEX TO GENERAL CONDITIONS

ARTICLE	TITLE	PAGE
100.	WORK IN STATE HIGHWAYS	GC-27
101.	EXISTING INSPECTION REPORTS	GC-27
102.	TEST REPORTS; CERTIFICATES OF COMPLIANCE AND SHIPPING LISTS	GC-27
103.	CLEANING FINISHED WORK	GC-27
104.	COMPLIANCE TO ACTS AND EXECUTIVE ORDERS	GC-28
105.	SEMI-FINAL INSPECTION / SUBSTANTIAL COMPLETION	GC-28
106.	CITY'S CERTIFICATE OF SUBSTANCIAL COMPLETION	GC-28
107.	LIMITED ACCEPTANCE OF WORK	GC-29
108.	FINAL INSPECTION	GC-29
109.	FINAL CHANGE ORDER	GC-29
110.	FINAL PAYMENT APPLICATION	GC-30
111.	FINAL COMPLETION/ CITY'S CERTIFICATE OF FINAL COMPLETION / NOTICE OF PROJECT ACCEPTANCE	GC-30
112.	ACCEPTANCE OF FINAL PAYMENT	GC-30
113.	10-HOUR OSHA CONSTRUCTION SAFETY AND HEALTH COURSE	GC-30

GENERAL CONDITIONS

INTRODUCTORY NOTE:

These General Conditions supplement the provisions and requirements of Contract and modify all Contract Documents which follow it numerically, as set forth in Section 1.2 of the Contract. The General Conditions may be amended, revised or supplemented by the Special Conditions which are project specific. The Contractor's attention is directed to the attached Special Conditions for any amendments, revisions or supplements to the General Conditions for this project. The terms used in these General Conditions which are defined in the Contract have the meanings assigned to them in said Contract.

This section applies equally and specifically to all contractors supplying labor and/or equipment and/or materials for this Project and all drawings, specifications and general provisions of the Contract apply to these General Conditions. Where items of the Contract are repeated, it is intended to call particular attention to or qualify them; it is not intended that any other parts of the Contract shall be assumed to be omitted if not repeated herein.

Unless expressly provided for otherwise in the Contract Documents, all costs associated with any work/services required or necessary under the General Conditions shall be considered as included in the Contract Amount (also referred to as Total Compensation). No separate or additional payment will be made for this work and/or services.

ARTICLE 1. PLANS AND SPECIFICATIONS AT THE SITE / AS-BUILT DRAWINGS

1.01 The Contractor shall maintain at the Project site two (2) copies of all Plans, Specifications, Addenda, approved Shop Drawings, Change Orders and other Modifications, Schedules and Instructions, in good order. One copy is to be marked to record all changes made during construction. These shall be available at all times to the Project Engineer and the City or their authorized representatives. At the conclusion of construction, the Contractor is to turn one (1) corrected set of all documents over to the Project Engineer.

ARTICLE 2. CONSTRUCTION PROGRESS SCHEDULE

2.01 Within seven (7) consecutive calendar days of the written Notice to Proceed, and prior to commencement of any work on site, the Contractor shall prepare and submit for the approval of the City three (3) copies of a complete Construction Progress Schedule which shall be comprised of a critical path method network. (At the same time, the Contractor shall submit the Schedule of Values, Sedimentation and Erosion Control Measures, Water Control Plan and Environmental Protection Plan, as outlined in the various Articles of these General Conditions).

2.02 The critical path of the Project must be identified on the Construction Progress Schedule which shall provide a workable plan for monitoring the progress of all the elements of the Project, establish and clearly display the critical elements of the Work, on which each part or division of the Work is expected to be started and completed, forecast completion of the elements of the Project, and match the Contract duration in time. The Construction Progress Schedule shall also indicate the logic of the work for the major elements and components of work under the Contract, such as the planned mobilization of plant and equipment, sequences of operations, procurement of materials and equipment, duration of activities, type of relationship, lag time (if any), and such other information as it is necessary to present a clear statement of the intended activities.

2.03 The schedule shall indicate all subcontractors to be utilized on the Contract and the portions of the Contract that they will be performing. The Contractor shall evaluate the status of the Project at least monthly, comparing it to the original schedule, which shall be revised as required. The Contractor shall notify the Project Engineer immediately of any circumstances that may affect the current schedule.

2.04 The Contractor shall perform the work of this Contract to satisfy the Construction Progress Schedule as approved by the Project Engineer. However, the Project Engineer and City reserve the right to amend and alter the Construction Progress Schedule, as approved, at any time and in a manner which the Engineer deems to be in the best interests of the City.

2.05 The Contractor shall be required to execute his work in accordance with the Construction Progress Schedule as prepared and in accordance with any additional requirements specified herein and approved by the Project Engineer.

The Construction Progress Schedule shall forecast the times for doing each portion of the work. The Contractor shall arrange the work under this Contract to conform with the Construction Progress Schedule, as it may be revised by the Engineer from time to time, at no additional expense to the City.

2.06 The revised Construction Project Schedule shall take some or all of the following actions to demonstrate the manner in which an acceptable rate of progress will be regained, by the following methods:

i. Increase construction manpower in such quantities and crafts as shall substantially eliminate the backlog of work and meet the current Contract completion date.
ii. Increase the number of working hours per shift, the number of shifts per day, the number of work days per week, or the amount of construction equipment, or any combination of the foregoing
iii. Reschedule work items to achieve concurrent accomplishment of work activities.

2.07 Under no circumstances will the adding of equipment or construction forces, increasing the working hours, or employing any other method, manner, or procedure to return to the contractually required completion dates be a justification for additional compensation to the Contractor.

ARTICLE 3. ESTIMATED QUANTITIES

3.01 Any Estimated Quantities for the Project furnished by the City, including those provided on the Bid/Proposal Form, are approximate only and are: a) for procurement related comparison purposes only, b) given as a basis for the pricing and c) are not represented to be actual quantities for completion of the Work. Within the limits of available funds, the Contractor will be required to complete the Work at the unit prices provided in the Bid Form/or Price Proposal whether it involves quantities greater or lesser than the estimate. The Contractor will be compensated only for the actual quantity of authorized, and actually performed, and/or materials furnished.

ARTICLE 4. SCHEDULE OF VALUES; APPLICATION FOR PAYMENT

4.01 Within seven (7) consecutive calendar days after the Notice to Proceed, as a basis for estimating partial payments, the Contractor shall submit for the approval of the City a certified Schedule of Values, broken down into quantities and unit costs for the various parts of the work, divided as may be directed and aggregating the total sum of the Contract; and if required, he shall submit evidence supporting this schedule.

4.02 The Contractor's requisition for payment shall be submitted on forms supplied by the Contractor and approved by the City and shall be in such numbers of copies as may be designated by the City. Sample forms are included in the ITB/RFP Documents. Alternate payment application forms may be utilized provided they are approved by the City, in writing, prior to submission by the Contractor.

4.03 If the Project is funded by multiple funding sources, the Contractor may be required to submit separate requisitions for payment to each source, on the forms provided by each source and in accord with all requirements of each individual funding source.

4.04 For Lump Sum projects, the requirements for the Schedule of Values are further defined as follows: a) the Schedule of Values shall delineate the various tasks that comprise the lump sum items. Each item in the Schedule of Values shall include its proper share of overhead and profit. This schedule, when accepted by Project Engineer, shall only be used as a basis for Contractor's periodic payment applications. No payment will be made to Contractor until such Schedule has been submitted and accepted by Project Engineer, and b) the lump sum item shall be broken down sufficiently to provide a convenient and realistic means for determining the amount of work done during various stages of progress.

ARTICLE 5. PARTIAL PAYMENTS

5.01 The City will review the Contractor's monthly requisitions for Partial Payments to arrive at what is, in its opinion, a fair and just estimate of the materials suitably stored on the site and the amount of work performed on the Contract. At its discretion, the City may allow to be included in the monthly requisitions materials stored off the site. In the event the City allows the Contractor to include in its requisitions payments for materials stored off the site, the Contractor shall also submit any additional bonds and/or insurance certificates relating to off-site stored material, and follow such other procedures as may be required by the City.

5.02 In making such Partial Payments for the Project, retainage shall be held in the amount of 5% of the value of work completed to date. The Retainage does not include additional sums that the City may withhold due to the Contractors failure to comply with construction plans, specifications etc. deemed provisions of this contract.

5.03 Where prices are not broken down sufficiently in the Schedule of Values to accurately determine the value of work completed, Project Engineer will estimate the value of work completed and will deduct some amount so as to arrive at a conservative value which will allow City to easily complete the Work with the unpaid balance. When the required detail in the Schedule of Values is not provided by Contractor, Contractor agrees to accept Project Engineer's determinations.

ARTICLE 6. INSPECTION AND TESTS

6.01 All material and workmanship shall be subject to inspection, examination and testing by the City and/or Project Engineer (in addition to that required by the Specifications) any and all times during manufacture and/or construction and at any and all places where such manufacture and/or construction is carried on. Notice of the time of all tests to be made at the site shall be given to all interested parties.

6.02 Contractor must obtain the Engineer's approval of any sources of materials to be incorporated into the Project before beginning to use them for the Project.

6.03 If, at any time before issuance of a Notice of Project Acceptance by the City, the City and/or Project Engineer considers it necessary or advisable to examine any portion of the Project already completed by removing or testing out the same, the Contractor shall upon request furnish promptly all necessary facilities, labor and materials. If such work is found to be defective in any material respect because of a fault of the Contractor or any of its subcontractors, or if any work shall have been covered over without the approval or consent of the City (whether or not it is found to be defective), the Contractor shall be liable for testing costs and all costs of correction, including labor, material, services of required consultants, additional supervision and administrative costs.

6.04 For Projects that include material testing to ensure compliance with the Technical Specifications, the Contractor, unless expressly provided for otherwise in the Contract Documents, shall be responsible for all testing as required in the relevant sections of the Technical Specifications.

6.05 Without additional charge, the Contractor shall promptly furnish all reasonable facilities, labor and materials necessary to make tests safe and convenient. Special, full size and performance tests shall be as described in the Specifications.

ARTICLE 7. UTILITIES

7.01 The accuracy and completeness of the utility information shown on the Plans and/or otherwise provided by the City is not guaranteed. The Contractor shall make its own investigation of the extent and location of utilities and of the possibility of relocation work by the utility companies, and shall plan its operations accordingly. No claim for any delays, damage or extra work occasioned thereby will be allowed.

7.02 The Contractor shall allow others access to the Project for the purpose of placing, relocating or maintaining utilities, and he shall cooperate in every way in the performance of this Project.

7.03 The Contractor shall notify the utility owners well in advance of the time the Contractor proposes to perform any work which would endanger utility installations, and the Contractor shall cooperate with the utility owners in relocating and/or protecting such installations during construction operations.

7.04 No payment will be made to the Contractor for locating, protecting and making arrangements for relocating public utilities or for any delays caused thereby. The Contractor shall include all costs of this Project in other scheduled items of the Contract.

ARTICLE 8. SEDIMENTATION AND EROSION CONTROL

8.01 All watercourses shall be protected from sedimentation, both during and after construction. The Contractor shall

control erosion and sedimentation problems in accordance with Connecticut Guidelines for Soil Erosion and Sediment Control prepared by the Connecticut Council on Soil and Water Conservation, dated 2002, as amended.

8.02 The Contractor shall submit the Sedimentation and Erosion Control Plan for the approval of the Project Engineer within seven (7) consecutive calendar days after the Notice to Proceed.

8.03 The Contractor shall be responsible for providing silt fences, staked haybales and other temporary erosion control measures which may be required to properly complete this Project. No extra compensation will be allowed, due to water or precipitation levels fluctuation.

ARTICLE 9. PROTECTION OF ENVIRONMENTAL RESOURCES

9.01 The environmental resources within the Project boundaries and those affected outside the limits of permanent work under this Contract shall be protected during the entire period of this Contract. The Contractor shall confine its activities to areas defined by the Plans and Specifications. Environmental protection shall be as stated in the following subparagraphs:

A. Prior to the beginning of any construction, the Contractor shall identify all land resources to be preserved within the work area. The Contractor shall not remove, cut, deface, injure or destroy land resources including trees, shrubs, vines, grasses, top soil and land forms without special written permission from the property owner. No ropes, cables or guys shall be fastened or attached to any trees for anchorage unless specifically authorized in writing by the Project Engineer. Where such special emergency use is permitted, the Contractor shall provide effective protection for land and vegetation resources at all times as defined in the following subparagraphs.

B. Prior to any construction, the Contractor shall mark the areas that are not required to accomplish all work to be performed under the Contract. Isolated areas within the general work area which are to be saved and protected shall also be marked or fenced. Monuments and markers shall be protected before construction operations commence. Where construction operations are to be conducted during darkness, the markers shall be visible. The Contractor shall convey to its personnel the purpose of marking and/or protection of all necessary objects.

C. Trees, shrubs, vines, grasses, land forms and other landscape features indicated and defined on the Plans to be preserved shall be clearly identified by marking, fencing or wrapping with boards, or any other approved techniques.

D. Earthwork brought to final grade shall be finished as indicated and specified. Side slopes and back slopes shall be protected as soon as practicable upon completion of rough grading. All earth work shall be planned and conducted to minimize the duration of exposure of unprotected soils. Except in instances where the constructed feature obscures borrow areas, quarries and waste material areas, these areas shall not initially be cleared in total. Clearing of such areas shall progress in reasonably sized increments as needed to use the areas developed as approved by the City and/or Project Engineer.

E. Runoff from the construction site shall be controlled by the construction of diversion ditches, benches and berms to retard and divert runoff to protected drainage courses, and any measures required by area wide plans approved under Paragraph 208 of the Clean Water Act, as amended.

F. The Contractor shall construct or install all temporary erosion control features as indicated in the submitted Sedimentation and Erosion Control Plans, or directed by the City and/or Project Engineer. Temporary erosion control measures such as berms, dikes, drains, grassing and mulching shall be maintained until construction of the Project is completed.

G. The Contractor's field offices, staging areas, stockpile storage and temporary buildings shall be placed in areas designated on the submitted Plan. Temporary movement or relocation of the Contractor's facilities shall be made only on approval by the City and/or Project Engineer.

H. Borrow areas shall be managed to minimize erosion and to prevent sediment from entering nearby watercourses.

I. Spoil areas shall be managed and controlled to limit spoil areas and to prevent erosion of soil or sediment from entering nearby watercourses. Spoil areas shall be developed in accordance with the grading plan indicated on the Plans.

ARTICLE 10. ENVIRONMENTAL PROTECTION PLAN

10.01 Within seven (7) consecutive calendar days after the Notice to Proceed, and prior to commencement of any work on site, the Contractor shall submit an Environmental Protection Plan for the approval of the City in accordance with the provisions herein specified. The plan shall include but not be limited to the following:

A. A list of Federal, State and Local laws and regulations concerning environmental protection, pollution control and abatement that are applicable to the Contractor's proposed operations and the requirements imposed by those laws and regulations.

B. Methods for protection of features to be preserved within authorized work areas. The Contractor shall prepare a listing of methods to protect resources needing protection, i.e., trees, shrubs, vines, grasses and groundcover, landscape features, air and water quality, fish and wildlife, soil, historical, archeological and cultural resources.

C. Procedures to be implemented by the Contractor to provide the required environmental protection and to comply with applicable laws and regulations. The Contractor shall set out the procedures to be followed to correct pollution of the environment due to accident, natural causes or failure to follow the procedures set out in accordance with the Environmental Protection Plan.

D. The location of the nearest suitable solid waste disposal area and a permit allowing the Contractor to use those facilities.

E. Drawing showing locations of any proposed temporary excavations or embankments for haul roads, stream crossings, material storage areas, structures, sanitary facilities, and stockpiles of excess' or spoil materials.

F. Environmental monitoring plans for the job site, including land, water, air and noise monitoring as necessary, and as required by the Project Engineer.

G. Environmental monitoring and management plans for the any endangered wildlife or plant species as determined by CT DEEP, City or Project Engineer.

H. Traffic control plan when necessary.

I. Methods of protecting surface and ground water during construction activities.

J. Work area plan showing the proposed activity in each portion of the area and identifying the areas of limited use or nonuse. The plan should include measures for marking the limits of use areas.

ARTICLE 11. TEMPORARY UTILITIES

11.01 Unless expressly otherwise provided for in the Contract Documents the Contractor shall be responsible for determining and supplying at no cost to the City all temporary utilities of any nature whatsoever needed to complete the work. Unless otherwise provided for in the ITB/RFP Documents, all necessary temporary utilities shall be installed at the start of the Project.

ARTICLE 12. ABBREVIATIONS

12.01 Where one of the following abbreviations are used in the Contract Documents, it shall have the meaning set forth opposite each below:

AASHTO	American Association of State Highway and Transportation Officials
ACI	American Concrete Institute

AGA	American Gas Association
AIEE	American Institute of Electrical Project Engineers
AISC	American Institute of Steel Construction
API	American Petroleum Institute
ANSI	American National Standards Institute
ASCE	American Society of Civil Engineers
ASHRAE	American Society of Heating, Refrigeration and Air Conditioning Engineers
ASME	American Society of Mechanical Engineers
ASTM	American Society of Testing and Materials
AWG	American (or Brown and Sharpe) Wire Gauge
AWWA	American Water Works Association
CONNDOT	Connecticut Department of Transportation
DEP	Department of Environmental Protection
EDR	Equivalent Direct Radiation
EPA	Environmental Protection Agency
FWQA	Federal Water Quality Administration
IBR	Institute of Radiator and Boiler Manufacturers
MCB	Master Car Builders
NBS	National Bureau of Standards
NEC	National Electrical Code (latest edition)
NEMA	National Electrical Manufacturers Association
NEWWA	New England Water Works Association
NFPA	National Fire Protection Agency
NPT	National Pipe Thread
SMACNA	Sheet Metal and Air Conditioning Association
OS&Y	Outside Screw and Yoke
STL.WG	United States Steel Wire, Washburn and Moen, American Steel And Wire Companies and Roebling Gauge
USS GAUGE	United States Standard Gauge
WOG	Water, Oil, Gas
WSP	Water Steam Pressure

"Federal Specification" A Federal specification issued by the Federal Supply Services Administration, Washington, D.C.

ARTICLE 13. SUBSURFACE EXPLORATION

13.01 Where applicable, and if provided by the City, boring logs, probes and related information contain data regarding subsurface conditions at the dates and location indicated. This information is shown for the convenience of the Contractor, but is not guaranteed to be correct or complete, and it is not warranted that it represents a true or approximately true picture of the actual subsurface conditions to be encountered.

ARTICLE 14. CONTRACT AND CONTRACT DOCUMENTS

14.01 The City's record copy of the Contract Documents shall control and shall be effective and binding on the Contractor. In the event that any provision in the Contract Documents conflict with any other provision therein, the priority of the documents shall be in accordance with Section 1.2 of the Contract.

ARTICLE 15. SHOP DRAWINGS, CATALOG CUTS AND SAMPLES

15.01 The Contractor shall promptly submit to the Project Engineer five copies of each submittal prepared in accordance with the approved schedule. After examination of such submittal by the Project Engineer and the return thereof, the Contractor shall make such corrections to the submittal as have been indicated and shall furnish the Project Engineer with five corrected copies. If requested by the Project Engineer, the Contractor must furnish additional copies. Regardless of corrections made on, or approvals given to, such submittal by the Project Engineer, the Contractor shall nevertheless be responsible for the accuracy of such submittal. The Contractor shall also be responsible for the submittal's conformity to the Submittal and Specifications, unless the Contractor notifies the Project Engineer in writing of any deviations at the time of submission of the submittal.

15.02 Submittal of all fabricated work shall be submitted to the Project Engineer and no work shall be fabricated unless it is done at the Contractor's own risk until approval has been given by the Project Engineer and City.

15.03 The Contractor shall submit all submittals on dates sufficiently in advance of requirements in order to enable the Project Engineer and City to properly review them. This period shall include time to correct, resubmit and recheck, if necessary, and no claim for delay will be granted to the Contractor because of the Contractor's failure in this respect. The Project Engineer and City will be given a minimum of fourteen (14) consecutive calendar days for the initial review of each submitted submittal.

15.04 All submitted submittals must bear the approval stamp of the Contractor and reference conformance to the applicable provisions of the Specifications as evidence that the Contractor has checked the drawings. Any drawings submitted without this stamp of approval will not be considered and will be returned to the Contractor for resubmission. If the submittals show variations from the requirements of the Contract Documents because of standard shop practice or other reason, the Contractor shall make specific mention of such variation in the letter of submission to the Project Engineer. If the variation is acceptable to the Project Engineer and City, suitable action may be taken for proper adjustment. If not acceptable, the Contractor shall not be relieved from the responsibility for executing the work in accordance with the Contract Documents, although such submittals had been approved.

15.05 Where submittals are submitted by the Contractor that indicate a departure from the Contract Drawings which the Project Engineer deems to be a minor adjustment and in the City's interest and not involving a change in the Contract price or an extension in time, then the Project Engineer may approve the drawings. Such approval will contain, in substance the following:

> The modification shown on the attached drawings is approved in The interest of the City to effect an improvement for the project and is ordered with the understanding that it does not involve any change in the Contract price or time. The modification is generally subject to all Contract stipulations and covenants and it is without prejudice to any and all rights of the City under the Contract.

The approval of submittals will be general and shall not relieve the Contractor from the responsibility for

adherence to the Contract nor of the responsibility for any errors that may exist.

15.06 The Contractor agrees to hold the Project Engineer and the City harmless and to defend them against damage or claims for damages arising out of injury to others or to property of third parties which result from errors on shop or working drawings, whether or not they have been approved by the Project Engineer and/or the City.

15.07 Working Drawings. When required by the Contract or when ordered to do so by the City Representative, the Contractor shall prepare and submit 4 copies of the working drawings to the City Representative for review. These drawings shall be submitted sufficiently (at least 15 consecutive calendar days) in advance of the proposed use, to allow for their review, and any necessary revisions, without delay of the Project. No work covered by these working drawings shall be done until the drawings have been submitted to the City Representative for review and the City Representative's comments have been appropriately taken into account and implemented. The furnishing of the working drawings shall not serve to relieve the Contractor of any part of its responsibilities under the Contract.

ARTICLE 16. CONTRACTOR'S TITLE TO MATERIALS

16.01 No material, supplies or equipment for the work shall be purchased by the Contractor, or by any Subcontractor, subject to any chattel mortgage or under any conditional sale or other agreement by which an interest therein or in any part thereof is retained by the seller or supplier. The Contractor warrants good title to all material, supplies and equipment installed or incorporated in the work. The Contractor further warrants that, upon completion of all work, he will deliver the premises, together with all improvements and appurtenances constructed thereon, to the City free of any claims, liens, charges or encumbrances. The Contractor further warrants that neither the Contractor nor any person, firm or corporation furnishing any material, labor or equipment for any work covered by this Contract shall have a right to lien upon the premises or any improvement or appurtenance thereon.

ARTICLE 17. "OR EQUAL" CLAUSES

17.01 Unless otherwise provided for in the ITB/RFP Documents, the Contract will be on the basis of material and equipment described on the ITB/RFP Documents without consideration of possible substitute or "equal" items. However, subsequent to award of the Work, whenever a material or article required is specified or shown on the plans by using the name of a proprietary product or of a particular vendor or manufacturer, any materials or article which, in the sole discretion of the Project Engineer, is equal or superior to the specified item to material, may be considered an "equal." Requests for substitutions must be supported by evidence such as technical data, test results, or other pertinent information that demonstrate that the substitute offered is equal or better than the specification's requirements. Such items shall not be purchased or installed without the written approval of the Project Engineer. In all cases, only new materials shall be used for the work.

ARTICLE 18. REPRESENTATIONS OF THE CONTRACTOR

18.01 The Contractor represents and warrants:

(a) That he is financially solvent and that he is experienced and competent to perform the type of work or to furnish the plant, material or equipment to be performed or furnished by him; and

(b) That he is familiar with all Federal, State and municipal laws, ordinances, orders and regulations which may in any way affect the work of those employed therein, including but not limited to any special acts relating to the work or to the project of which it is a part; and

(c) That such permanent and temporary work required by the Contract Documents to be done can be satisfactorily constructed and be used for the purpose for which it is intended, and that such construction will not injure any person nor damage any property; and

(d) That he has carefully examined the drawings, specifications and addendum (or addenda) if any, and the site of the work, and that, from his own investigations, he has satisfied himself as to the nature, quality and quantity of surface and subsurface materials likely to be encountered; of the character of equipment required for the work; of other facilities needed for the performance of the work; of the general and local conditions and of all other materials which in any way may affect the work and its performance; and

(e) That he is aware of the hazards involved in the work and the danger to life and property both evident and inherent and that he will conduct the work in a careful and safe manner without injury to persons or property; and that he can provide the necessary equipment, labor and materials to complete the contract work within the specified contract duration.

ARTICLE 19. PROTECTION OF WORK AND PROPERTY (EMERGENCY)

19.01 The Contractor shall at all times safely guard and protect the City's property from injury or loss in connection with this contract. He shall at all times safely guard and protect his own work and that of adjacent property from damage. The Contractor shall replace or make good any such damage, loss or injury unless such is caused directly by errors contained in the Contract or by the City or his duly authorized representatives.

19.02 In case of an emergency that threatens loss or injury of property and/or safety of life, the Contractor will be allowed to act in a diligent manner without previous instructions from the City. He shall notify the City immediately thereafter.

19.03 Where the Contractor has not acted but has notified the City of an emergency threatening injury to persons or damage to the work or to any adjoining property, he shall act as instructed or as authorized by the City.

19.04 The amount of reimbursement claimed by the Contractor on account of any emergency action shall be determined in the manner provided elsewhere in the Contract Documents.

ARTICLE 20. WEATHER CONDITIONS

20.01 In case of temporary suspension of the work, or during inclement weather, or whenever the City shall direct, the Contractor shall carefully protect his work and materials against damage or injury from the weather. The Contractor shall cause all his subcontractors to provide the same protection for their portion of the work. If, in the opinion of the City, any work or material was damaged or injured by reason of failure on the part of the Contractor, or any of his subcontractors, so to protect his work, or otherwise damaged by the negligence of the Contractor or any of his subcontractors or their agents or servants, or is otherwise defective, such materials shall be removed and replaced at the expense of the Contractor.

20.02 For projects involving asphalt paving, all work shall be temporarily suspended, upon direction of the City, when the Contractor can no longer properly pave exposed areas in accordance with the plans and specifications during inclement weather or during winter months.

ARTICLE 21. SUBLETTING

21.01 The Contractor is not to assign, transfer or sublet the Contract in whole or in part to any other person or persons without written permission from the City. The Contractor cannot abridge the terms of the Contract in any way without written permission of the City. The Contractor must keep the Contract in his name and control until all work is completed the City has issued a Notice of Project Acceptance for the Project. The Contractor shall likewise not assign any of the money payable under this Contract. Approval by the City of the subletting of any part of the work shall not, under any circumstances, relieve the Contractor or his Surety of any liabilities or obligations under the terms of the Contract Documents.

21.02 The Contractor shall be as fully responsible to the City for the acts and omissions of his subcontractors, and of the persons either directly or indirectly employed by them, as he is for the acts and omissions of persons directly employed by him. Should any subcontractor violate any of the terms of these specifications, the City may, at its option, require the Contractor to end and terminate such subcontract.

21.03 The Contractor shall cause appropriate provisions to be inserted in all subcontracts relative to the work to bind subcontractors to the Contractor by the terms of the Contract and the General Conditions and other provisions of the Contract Documents. This language is to be applicable insofar as necessary to the work and is to give the Contractor the same power over as regards terminating any subcontract as the City may exercise over the Contractor under any provisions of the Contract Documents.

21.04 Nothing contained in this Contract shall create any contractual relation between the City and any subcontractor.

ARTICLE 22. SUBSTITUTE BOND

22.01 If, at any time, the Contractor's Surety or Sureties, or the carriers of other insurance herein specified to be written, become insolvent or, in a reasonable judgment of the City, become unsafe or unsound then, upon five days written notice from the City to the Contractor, the Contractor shall substitute such Performance and Labor and Material Bond or insurance with such other Surety or carrier in such form as shall be acceptable to the City. Any additional premium caused by such substitution shall be paid for by the Contractor. No further payments will be deemed due nor will be made until the new Surety or Sureties have furnished such an acceptable bond to the City.

ARTICLE 23. RIGHT TO WITHHOLD PAYMENTS

23.01 The City may withhold from the Contractor so much of any approved payments due as may in the judgment of the City be necessary to:

1. Assure the payment of any lien, stop notice or claim, filed with the City for work, labor, or materials done, performed or delivered and used in the prosecution of the work herein provided for (whether in strictly legal form or otherwise)
2. Protect the City from loss due to defective work not remedied or through any improper or defective machinery, implements or appliances used by the Contractor or for failure of the Contractor to fully comply with any requirements of the Contract
3. Protect the City from loss due to injury to persons or damage to work or property of other contractors, subcontractors or others caused by the act' or neglect of the Contactor or any subcontractors.

23.02 The City shall have the right, as agent for the Contractor, to apply any amounts so withheld in such manner as the City may deem proper to satisfy such claims or to secure such protection. Such applications of such money shall be deemed payments to the account of the Contractor.

23.02 Notwithstanding the above, the Contractor, in conformance with Section 49-41a of the Connecticut General Statutes, as revised, shall, within 30 consecutive calendar days after any given Contract payment to the Contractor by the City, pay any amounts due any subcontractor, whether for labor performed or materials furnished.

ARTICLE 24. PAYMENTS BY CONTRACTOR

24.01 The Contractor, in conformance with Section 49-41a of the Connecticut General Statutes, as revised, shall, within 30 consecutive calendar days after any given Contract payment to the Contractor by the City, pay any amounts due any subcontractor, whether for labor performed or materials.

ARTICLE 25. NOTICE OF WARNING

25.01 If the Contractor shall fail to make prompt payment to persons supplying labor or materials for the work; or refuse or fail to supply enough properly skilled workmen or proper materials; or refuse or fail to prosecute the work or any part thereof in accordance with the Contract Documents or with such diligence as will insure its completion within the period herein specified (or any duly authorized extension thereof); or fail to complete the work within said period; or refuse to regard laws ordinances, codes or instructions of the City then the City shall forward A Notice of Warning to the Contractor by registered mail at the address given in the Contract. In the event the Contractor fails to comply with said Notice of Warning within five (5) consecutive calendar days from receipt thereof, the City shall have the right to terminate the Contract.

ARTICLE 26. PROGRESS MEETINGS

26.01 Progress meetings will be held weekly at locations, dates and times selected by the City for the purpose of reviewing, scheduling and coordinating the Project's progress as well as other matters.

ARTICLE 27. PERMITS

27.01 The Contractor shall keep himself fully informed of all existing and current Municipal, State or Federal

ordinances, regulations or laws in any way limiting or controlling the operations or actions of those engaged in the work or affecting the materials supplied to or by them. The Contractor shall at all times observe and comply with all such valid and binding ordinances, laws or regulations. The Contractor shall protect and indemnify the City and its representatives against any claims arising from, or based upon, any violation of the same.

ARTICLE 28. RIGHT TO USE THE WORK

28.01 The City may enter upon the use of the whole or of any portion of the work, which may be in condition to use, at any time before its issuance of a Notice of Project Acceptance by the City. Such use shall not constitute, or be evidence of, acceptance by the City or by the Project Engineer of the whole or any part of the material furnished or work performed under the Contract.

ARTICLE 29. PROVISIONS REQUIRED BY LAW

29.01 Each and every provision of law and clause required to be inserted in this Contract shall be deemed to be inserted herein and the Contract shall be read and enforced as though it were included herein. If, through mistake or otherwise, any such provision is not inserted, then, upon application of either party, the Contract shall forthwith be physically amended to make such insertion.

29.02 If this Contract contains any unlawful provisions not an essential part of the general structure of the Contract, and which shall not appear to have been a controlling or material inducement in the making thereof, the same shall be deemed stricken from the Contract without affecting the binding force of the remainder.

ARTICLE 30. WAIVER

30.01 Neither the inspection by the City or Project Engineer or by any of their employees; nor any order, measurement or certificate by the Project Engineer; nor any order by the City for the payment of any money; nor any payment for or acceptance of the whole or any of the work by the Project Engineer for the City; nor any extension of time; nor any possession taken by the City or its employees shall operate as a waiver of any provision of this Contract or of any power herein reserved to the City. Nor shall such action waive any right to damages herein provided. Nor shall any waiver of any breach of the Contract constitute a waiver of any other or subsequent breach. Any remedy provided in this Contract shall be construed as cumulative - i.e. in addition to each and every other remedy herein provided.

ARTICLE 31. USE OF PREMISES AND REMOVAL OF DEBRIS

31.01 The Contractor expressly undertakes at his/her own expense:

1. To take every precaution against injuries to persons or damage to property.
2. To store apparatus, materials, supplies and equipment in such orderly fashion at the site of the work as will not unduly interfere with the progress of the work or the work of any other contractor.
3. To place upon the work or any portion thereof only such loads as are consistent with the safety of that portion of the work.
4. To frequently clean up all refuse, rubbish, scrap materials and debris caused by the Contractor's operations to the end that at all times the site of the work shall present a neat, orderly and work manlike appearance.
5. To remove all surplus material; falsework; temporary structures including foundations thereof; plant of any description and debris of any nature resulting from the Contractor's operations before Final Completion.
6. To put the site in a neat orderly condition, to remove all clean-up materials, to remove such materials from the construction site, and to deposit them in a refuse disposal site at his/her expense.
7. To effect all cutting, fitting or patching of work required to make the same conform to the Drawings and Specifications and, except with the consent of the City, not to cut or otherwise alter the work of any other contractor.

ARTICLE 32. RIGHT-OF-WAY AND SUSPENSION OF WORK

32.01 Land and rights-of-way for the purposes of this Contract will be furnished by the City to the extent shown on the Drawings. The City will use diligence in acquiring said land and rights-of-way as speedily as possible. However, it is possible that not all land and rights-of-way will be obtained as herein contemplated before construction

commences. In such case the Contractor shall begin the work upon such land and rights of-way as the City may have previously acquired. No claim for damages whatsoever will be allowed by reasons of the delay in obtaining the remaining lands and/or rights-of-way. Should the City be prevented or enjoined from proceeding with the work, or from authorizing its prosecution, either before or after the commencement, by reason of litigation or by reason of its inability to procure any lands or rights-of-way for the said work, the Contractor shall not be entitled to withdraw from the Contract because of these occurrences. In the event of any of the above occurrences, the time for completion of the work may be extended in the manner provided elsewhere in the Contract Documents.

ARTICLE 33. CONSTRUCTION EQUIPMENT AND MACHINERY

33.01 The Contractor shall furnish and maintain, at its own cost and risk, all tools, apparatus and appliances, hoists and/or cranes and power for same, scaffolding, runways, ladders, temporary supports and bracing and all other similar work or material necessary to insure speed, convenience and safety in the execution of its Contract. All such items shall be subject to approval of the City, upon the Project Engineer's recommendation, as to general stability, type and location, but the responsibility for proper design, strength and safety shall remain with the Contractor. All such items shall comply with OSHA regulations and all other applicable codes, statutes, rules and regulations.

33.02 The Contractor shall provide all drains, drainage, ditches and pumping apparatus (including power and attendance for same) that may be necessary to keep all excavations and sub-grade work free from water.

33.03 All machines, equipment, trucks and vehicles used in the prosecution of the work, or in connection therewith, shall be in proper working condition at all times. Only gasoline, electric or diesel engines shall be used for the power in operating equipment.

33.04 The Contractor shall be responsible for curtailing noise, smoke, fumes or other nuisances resulting from the operations. The. Contractor shall, upon written notification from the City or Project Engineer, make any repairs, replacements, adjustments or additions and furnish mufflers when necessary to' fulfill requirements. No oil tanks for fueling equipment shall be stored less than one hundred (100) feet from any watercourse.

33.05 All costs involved in complying with the stipulations outlined shall be included in the various prices in the bid/proposal.

ARTICLE 34. CONTRACTOR'S GENERAL GUARANTEE/WARRANTY PERIOD

34.01 The Contractor's General Warranty Period shall commence on the date of issuance of a Notice of Project Acceptance by the City and during such time Contractor shall guarantee his work is free from faulty materials and workmanship.

34.02 Within the Contractor's General Warranty Period, any portion of the Work shall, in the opinion of the City, require repairing, replacing or rebuilding, the Contractor shall start such repairs within five (5) consecutive calendar days after receipt of notice from the City. If the Contractor shall fail to or neglect to start the repairs within five (5) consecutive calendar days, the City may employ such other person or persons as it may deem proper to make such repairs. The City will charge the Contractor the cost thereby incurred. Nothing herein provided shall limit the liability of the Contractor or Surety to the City for non-performance of the Contractor's obligations at any time.

34.03 The Payment and Performance Bonds, and Material Bond, if required, shall remain in full force and effect through the Contractor's General Warranty Period.

34.04 Deficiencies in the Work discovered after the date of the issuance of a Notice of Project Acceptance by the City shall be deemed General Warranty Work. Such deficiencies shall be corrected by Contractor under this Article.

34.05 The Contractor shall remedy any defects due to faulty materials or workmanship within thirty (30) consecutive calendar days of receiving notice thereof by the City. Should the Contractor fail to correct the deficiency within thirty (30) consecutive calendar days, the City may perform the corrective work and Contractor shall be responsible for all reasonable costs incurred by City in performing such correction.

ARTICLE 35. PROCEDURE IN CONSTRUCTION

35.01 The Contractor shall start work and carry it on at such point or points and in such order of precedence and at times and seasons as may be determined by the City. The Contractor shall complete the various portions of the work in accordance with the schedule approved by the City.

35.02 A complete organization, complement of equipment and ample materials shall be on hand before actual work commences. The Contractor shall so arrange his/her organization, plant, equipment and materials so that construction operations will be carried on continuously. The Contractor will not be permitted to reduce the force of workers or remove any equipment from the work if such reduction or removal impairs the progress of the work.

35.03 In the event that the City awards more than one contract to the Contractor, the Contractor shall be required to prosecute the work on each contract simultaneously. The Contractor will be required to maintain a separate and independent organization and staff, labor forces and machinery on each contract in order to complete the work within the time set forth for the respective contracts.

ARTICLE 36. APPRENTICES

36.01 Apprentices shall be permitted to work only under a bonafide apprenticeship program registered either with the State Apprenticeship Council or with the Bureau of Apprenticeship, United States Department of Labor.

ARTICLE 37. CONTROL OF WORK

37.01 The Contractor shall abide by all orders, directions and requirements of the Project Engineer in the performance of the work.

37.02 In the event the Contractor is not personally present at the project site, he/she shall have a superintendent present at the site that possesses more than adequate communication skills. The superintendent must have proper knowledge of all applicable project requirements and conditions and must have authority to fully represent the Contractor with power to act and to be the recipient of orders and to obey all the instructions of the Project Engineer and/or the City. If proper provision for the carrying out of this stipulation is not made, then the Contractor shall be held responsible for the execution of such orders and instructions which the Project Engineer and/or City may deem necessary to issue to any employee regarding the work. The City or Project Engineer may order the work stopped until a duly authorized representative of the Contractor appears and receives instructions. No claims for damages or for an extension time in which to complete the work because of such delay will be allowed the Contractor.

37.03 In all cases, the Project Engineer shall determine classifications, quantities, quality, acceptability and fitness of the several kinds of work that are to be paid for under the Contract. The Project Engineer and/or City shall interpret the Plans and Specifications and any extra work orders and shall determine all questions in relation to said work and to the construction thereof.

37.04 The Contractor shall not employ any plant, equipment, material, methods or workers to which the City objects. The Contractor shall not remove any plant, materials, equipment or other facilities from the site of the work without the City's permission.

ARTICLE 38. CITY'S CONTROL NOT LIMITED

38.01 The enumeration in this Contract of particular instances in which the opinion, judgment, discretion or determination of the City shall control, and in which work shall be performed to the City's satisfaction and approval or inspection, shall not imply that only matters similar to those enumerated shall be so governed. Without exception all the work shall be so governed and performed.

ARTICLE 39. AUTHORITY AND DUTIES OF INSPECTORS

39.01 Inspectors shall be authorized to inspect all work done and all materials furnished. Such inspection may extend to all parts of the work and to the preparation or manufacture of the materials to be used. In the case of any dispute

arising between the Contractor and an Inspector as to materials furnished, or as to the manner of performing the work, the Inspector shall have the authority to reject material or to suspend the work until the question at issue can be referred to, and decided by, the City.

39.02 The Inspector shall not be authorized to revoke, enlarge, relax or release any requirements of these Specifications nor to approve or accept any of the provisions of the Contract Documents. The Inspector shall in no case act as a foreman or perform other duties for the Contractor. The Inspector shall not interfere with the management of the work by the Contractor. Any advice, which the Inspector may give the Contractor, shall not be construed as binding the City or the Project Engineer in any way. Such advice will not release the Contractor from the fulfillment of the terms of the Contract.

ARTICLE 40. INSPECTION AND CORRECTION OF WORK

40.01 All material furnished and work done will be inspected by the Project Engineer. The Project Engineer shall condemn any work or materials not in accordance with the Contract Documents. All condemned work and materials shall be removed and other work and materials furnished in accordance therewith. All materials rejected by the Project Engineer as being unfit for the particular clause in the Specifications to which they refer shall be removed from the site. Removal shall be within twenty-four (24) hours or shorter if the Project Engineer so directs. Should the Contractor refuse to remove the work and materials as ordered, then the Project Engineer may stop the Contractor from proceeding with the work. The City may supply workers and materials to remove the condemned work and materials at the expense of the Contractor.

40.02 Failure on the part of the Project Engineer, or any authorized Inspectors, to detect inferior work or materials, and to condemn the same, shall not be construed to imply an acceptance of such work or materials. Such failure shall not be construed as barring the City, at any subsequent time, from the recovery of such sum of money from the Contractor which may be required to construct or to build anew all portions of the work in which fraud was practiced, improper work executed or improper material furnished and built into the work. The Contractor shall furnish all necessary facilities should it be desirable at any time to make an examination of the work already completed.

40.03 If any work is found defective in any respect, the expense of the examination must be borne by the Contractor. If all work is found satisfactory, the expense of the examination will be paid for in the manner provided for elsewhere in the Contract Documents. If all work is found satisfactory, the expense of the examination will be paid for in the manner provided elsewhere in the Contract Documents.

40.04 If, in the opinion of the City, it is undesirable to reconstruct or correct any portion of the work injured or not performed in accordance with the Contract Documents, the Contractor's compensation hereunder shall be reduced by such amount as may be equitable under all circumstances.

ARTICLE 41. CONTRACTOR'S OBLIGATIONS

41.01 The Contractor shall and will, in good workmanlike manner, do and perform all work and furnish all supplies and material, machinery, equipment, facilities and means, except as herein otherwise expressly specified, necessary or proper to perform and complete all work required by this Contract. All to be accomplished within the time specified; in accordance with the provisions of this Contract and Specifications; in accordance with the Plans and Drawings pertaining to this Contract; in accordance with any and all supplemental Plans and Specifications and in accordance with the directions of the City as given from time to time during the progress of the work. The Contractor shall furnish, erect, maintain and remove such construction plant and such temporary work as may be required. The Contractor alone shall be responsible for the safety, efficiency and adequacy of the plant, appliances and methods. The Contractor shall be responsible for any damage, which may result from their failure or from their improper construction, maintenance or operation. The Contractor shall observe, comply with and be subject to all terms, conditions, requirements and limitations of the Contract and the Specifications. The Contractor shall do, carry on and complete the entire work to the satisfaction of the City.

41.02 The Contractor shall be solely responsible for all the work and shall provide all precautionary measures necessary for preventing injury to persons or damage to property. All injury or damage, of whatever nature, resulting from the work, or resulting to persons, from whatever cause, shall be the responsibility of, and shall be borne and sustained by, the Contractor. The Contractor shall hold the City and Project Engineer, or their agents, harmless and shall defend and indemnify the City and Project Engineer, or their agents, against damages, or claims for

damages, due to injury to .persons or to property arising out of the execution of work and for damages to material furnished for the work; for infringement of inventions, patents and patent rights used in doing the work; for damages arising out of the use of any improper material, equipment or labor used in the work and for any act of omission by any subcontractors therein. The Contractor shall bear all losses including, but not limited to, losses sustained on account of the character, quality or quantity of any part or all of the work, or because the nature of the land in or on which the work is done being different from what may have been estimated or indicated, or on account of the weather, elements or other causes, except for acts beyond the reasonable control of the Contractor.

ARTICLE 42. TOILET ACCOMMODATIONS AND DRINKING WATER

42.01 The Contractor shall provide necessary sanitary toilet accommodations and drinking water for the workers. Separate facilities shall be provided for female workers.

ARTICLE 43. SAFETY AND HEALTH REGULATIONS

43.01 These documents, and the joint and several phase of construction hereby contemplated are to be governed at all times by applicable provisions of the Federal law(s), including, but not limited to, the latest amendments of the following:

1. Williams-Steiger Occupational Safety and Health Act of 1970, Public Law 91-956.
2. Part 1910 - Occupational Safety and Health Standards; Chapter XVII of Title 29, Code of Federal Regulations.
3. Part 1926 - Safety and Health Regulations for Construction, Chapter XVII of Title 29, Code of Federal Regulations.

43.02 This project is subject to all of the Safety and Health Regulations (see 29 CFR 1926m as amended) as promulgated by the U. S. Department of Labor on June 24, 1974. The Contractor shall thoroughly familiarize him/herself with the requirements of these regulations.

ARTICLE 44. OWNERSHIP OF DRAWINGS AND SPECIFICATIONS

44.01 Subsequent to award of the contract, with the exception of the Contractor's executed set, all drawings and specifications are the property of the City. The City shall furnish one (1) paper and one electronic set, in PDF Format, of the construction drawings and specifications to the Contractor without charge. No additional sets will be furnished ~~ined~~ by the City. Such drawings and specifications are not to be used in other work.

ARTICLE 45. RESIDENTS' PREFERENCE IN WORK ON OTHER PUBLIC FACILITIES

45.01 Except to the extent prohibited by Federal or State statute, the Contractor shall comply with the provisions of Section 31-52a of the General Statutes of the State of Connecticut, Revision of 1967, a part of which is quoted as follows:

Section 2(b) each contract for any such project covered by this section under the supervision of the State or any of its agents shall contain the following provision:

"In the employment of mechanics, laborers or workmen to perform the work specified herein, preference shall be given to residents of the State who are and, continuously for at least six months prior to the date hereof, have been residents of the State, and if no such person is available, then to residents of other states."

ARTICLE 46. LISTING OF EMPLOYMENT OPENING

46.01 This Contract is executed subject to the Governor's Executive Orders No. 3 and No. 17, which are hereby made a part of this agreement. The Governor's Executive Order No, 17 requires, inter alia, that all contractors and subcontractors shall list all employment openings with the office of the Connecticut State Employment Service in the area in which the work is to be performed or where the services are to be rendered. Failure of the Contractor to conform to the requirements of the Governor's Executive Orders No. 3 and No. 17, and any orders, rules, or regulations issued pursuant thereto, shall be a basis for termination of this agreement by the City.

ARTICLE 47. SERVICE OF PROCESS

47.01 The Contractor, if not a resident of the State of Connecticut, or, in the case of a partnership, the partners, if not residents, hereby appoint(s) the Secretary of State of the State of Connecticut, and successors in office, agent for service of process. Such service, as arising out of, or because of, this Contract. Such appointment shall in effect throughout the life of this Contract and for a period of six (6) years thereafter.

ARTICLE 48. CITY OF WATERBURY ORDINANCE CHAPTER 34

48.01 For projects subject to the City's GOOD JOBS ORDINANCE (Code of Ordinances Chapter 34), the provisions thereof are in addition to any requirements of these General Conditions, and to any requirements of all funding sources for the Project, but only to the extent permitted by federal and state law.

ARTICLE 49. WAGE RATES

49.01 The wages paid on an hourly basis to any mechanic, laborer or workman employed upon the work herein, contracted to be done shall be at a rate equal to the rate customary or prevailing for the same work in the same trade or occupation in the City of Waterbury. The amount of payment or contribution paid or payable on behalf of each such employee to any employee welfare fund (as defined in Section 31-53 of the Connecticut General Statutes) shall also be at a rate equal to the rate customary or prevailing for the same work in the same trade or occupation in the City of Waterbury. If the Contractor is not obligated by agreement to make such payment or contribution on behalf of such employees to any such welfare fund, the Contractor shall pay to each employee the amount of payment of contribution for his classification on each payday as part of his wages.

49.02 For Prevailing Wage Rate projects, the Contractor shall furnish to the Project Engineer certified copies of payrolls showing the names of its employees working on the Project, the specific days and hours and number of hours that each of them has spent in doing so, and the amount paid to each person for said work.

ARTICLE 50. SCHEDULE AND POSTING OF MINIMUM WAGE RATES

50.01 Where applicable, the Contractor, and every subcontractor, shall post a legible copy of the Minimum Wage Rates and Classifications included in the Contract Documents. This posting shall be in a prominent and accessible place at the site of the work (See ARTICLE 49). The schedule shall show all determined minimum wage rates for the various classes of laborers and mechanics to be engaged to work on the project. The schedule shall also show all deductions, if any, required by law to be made from wages actually earned by the laborers and mechanics so engaged.

50.02 The rates established by each schedule are the minimum and all employees shall be paid no less than the established rate for each trade or occupation. In the case of a conflict between schedules in anyone trade or occupation, the higher rate listed shall control and such higher rate shall be considered to be the minimum.

50.03 State: Where applicable, the minimum rates of wages and schedule of supplements to be provided for the various trades shall be in accordance with the Prevailing Wage rate Schedule included herein. The rate of wages and schedule of supplements for any trade not appearing or mentioned in this schedule shall be in accordance with the prevailing rates established for that particular trade by the Connecticut Department of Labor or by the Comptroller or other analogous officer of the City of Waterbury. Minimum wages required to be paid shall include supplements for hospital, surgical, medical or other benefits as determined by all applicable section of the General Statutes of the State of Connecticut. The Contractor shall file a Wage Certification Form with the Labor Department of the State of Connecticut prior to beginning work on the site.

50.04 If for any reason and at any time, the Federal Government, the State of Connecticut, or the City of Waterbury, shall in any way supplement, change or amend the Prevailing Wage Rates Schedule, then the Contractor or subcontractor shall follow such Schedule as supplemented, changed or amended. In no case shall the Contractor or subcontractor be entitled to any additions, compensations or extras because of any supplement, change, amendment or predetermination of the Prevailing Wage Rate Schedule.

50.05 Federal Wage Rates, where applicable, shall be applied in any case where they exceed the State of Connecticut Minimum Wage rates or in any case where a rate has not been established by the State.

ARTICLE 51. COMPUTATION OF WAGES AND OVERTIME COMPENSATION

51.01 The Contractor and each subcontractor shall comply with all applicable Federal, State and local laws or ordinances with respect to the hours worked by laborers and mechanics engaged in work on the project. The Contractor and all subcontractors shall also comply with all applicable Federal, State and local ordinances with respect to compensation for overtime hours worked by laborers and mechanics engaged in work on the project.

ARTICLE 52. WAGE UNDERPAYMENTS AND ADJUSTMENTS

52.01 In addition to any applicable Federal or State regulations, the City may, in the case of underpayment of wages to any worker on the project under this Contract by the Contractor or by any subcontractor, withhold an amount from payments due the Contractor. Said amount to be sufficient to pay such worker the difference between the wages required to be paid the worker under this Contract and the amount actually paid the worker for the total number of hours worked. The City will disburse such amount so withheld by it for, and on behalf of, the Contractor to the employee to whom the amount is due. Such monies withheld pursuant to this article will be in addition to percentages to be retained pursuant to other provisions of the Contract.

ARTICLE 53. CONFORMANCE OF WORK

53.01 The work, during its progress and at its completion, shall conform to the work as shown on the drawings and to the directions given by the Project Engineer from time to time. The work shall be subject to such modifications or additions as the Project Engineer may deem necessary during the execution of the work. In no case will any work be paid for which is performed in excess of such requirements. The work shall also be accomplished in accordance with the Specifications.

ARTICLE 54. DIMENSIONS AND SCHEDULES

54.01 The Contractor will be required to check all dimensions and quantities shown on the drawings or schedules given to him by the Project Engineer. The Contractor shall notify the Project Engineer of all errors therein which he may discover by examining and checking the same. The Contractor shall not take advantage of any error or omission in these specifications, drawings and schedules. The Project Engineer will furnish all instructions should such error or omission be discovered and the Contractor shall carry out such instructions as if originally specified.

ARTICLE 55. PROTECTION FROM STORM

55.01 Should storm warnings be issued, the Contractor shall take every practicable precaution to minimize danger to persons, to the work and to adjacent property. These precautions shall include closing all openings; removing all loose materials, tools and/or equipment from exposed locations; and removing or securing scaffolding and other temporary work.

55.02 The Contractor shall provide measures to prevent stormwater runoff from entering excavation areas.

ARTICLE 56. PROTECTION OF WORK AND MATERIALS

56.01 The Contractor shall assume full responsibility for the protection of the work and materials during the progress of construction, and until issuance of a Notice of Project Acceptance by the City, against loss or damage by any cause or agency. The Contractor shall, at his own expense, provide efficient means for such protection.

ARTICLE 57. FURTHER SAFEGUARDS

57.01 In case the City or the Project Engineer shall at any time be dissatisfied with the means provided by the Contractor for any aforesaid protection of the work or of any other properties, the City or the Project Engineer may order additional measures and precautions for that purpose. The Contractor, at his own expense, shall immediately comply with such orders and carry them out.

ARTICLE 58. FIRST AID TO INJURED

58.01 The Contractor shall keep on site, ready for immediate use, all articles necessary for giving first aid to injured employees. He shall also provide arrangements for the immediate removal and hospital treatment of any injured employee who may require such treatment.

ARTICLE 59. CONFORMANCE WITH DIRECTIONS

59.01 The Project Engineer may make alterations in the lines, grades, forms, dimensions or materials to be used in the project, or any part thereof, either before or after the commencement of construction. If such alterations diminish the quantity included in any item of work to be done and paid for at a unit price, the Contractor shall have no claim for damages or for anticipated profits on the work thus dispensed with. If the changes increase the quantity included in any such item, such increase shall be paid for at the stipulated unit price.

ARTICLE 60. COMPETENT HELP TO BE EMPLOYED

60.1 The Contractor shall employ an experienced foreman, craftsmen and other workmen competent in the work in which they are to be engaged. All work shall be accomplished by able, skilled and competent personnel. If any person employed on the work by the Contractor shall appear to be incompetent or unreliable in any way, he shall be discharged immediately upon the request of the Project Engineer and shall not be again employed upon the work.

ARTICLE 61. STREETS AND SIDEWALKS TO BE KEPT OPEN

61.01 The Contractor shall keep the street and sidewalks in which he may be working open at all times to pedestrian and vehicular traffic. If, in the opinion of the City or the Project Engineer, the interest of abutters and the public requires it, the Contractor shall bridge or construct plank crossings over trenches at street crossings, roads or private ways. The Contractor shall conduct his work for this project in such manner as the City or the Project Engineer may direct from time to time. No sidewalk shall be obstructed where it is possible to avoid it. No additional payment shall be made to the Contractor for such work.

61.02 The Contractor shall provide all necessary fire crossings at principal intersections or ways usually traveled by fire apparatus. The Contractor shall make provision for the passage of fire apparatus to the work area, including along the line of pipeline installations.

61.03 All work shall be conducted in such a manner as to create minimum interference with existing businesses and commercial establishments. Such establishments shall be allowed to conduct business at all times during the construction.

61.04 The Contractor shall be responsible for taking all steps necessary to minimize dust emanating from the project and for keeping the streets free of the accumulation of sand and other similar materials.

ARTICLE 62. LIGHTS, BARRIERS, FENCES, WATCHMEN AND INDEMNITY

62.01 The Contractor shall put up and maintain such barriers, fences, lighting, and warning lights, danger warning signals and signs as will prevent accidents during the construction. The Contractor will protect the work and will insure the safety of the personnel and of the public at all times and places. The Contractor shall defend, indemnify and save harmless the City its agents in every respect from any injury or damage whatsoever caused by any act, omission or neglect of the Contractor or his subcontractors, or their servants or agents. Such indemnification shall also include any claims arising out of failure to erect and maintain sufficient railing or fencing as required by Section 13a-111 of the Connecticut General Statutes. The fact that the City may retain control of the premises, or that the City, or its agents, may take action to erect or maintain railings or fencing shall not relieve the Contractor's obligations hereunder.

62.02 The Contractor shall furnish, maintain and use all necessary safety devices; follow all such safety practices in the prosecution of the work and shall adopt, follow and maintain such additional safety measures as, in the opinion of the Project Engineer, are conducive to safe operation by the Contractor. The Contractor shall cause his subcontractor(s) to also adopt, follow and maintain these measures. All of this shall be done at the Contractor's or subcontractor's own expense. The City shall have the right to order any or all work suspended where, in the

opinion of the City, such work is not being carried on in a safe and proper manner or where persons or property are not being properly protected or safeguarded. Such work shall not be resumed until the City's requirements have been met and the City or Project Engineer has directed that work be resumed. Any work so suspended shall be at the Contractor's expense.

62.03 In addition to the above, when as is necessary or when required by the City and/or the Project Engineer, the Contractor shall post signs and shall employ watchmen or flagmen for the direction of the traffic at the site and for excluding unauthorized persons from the site at all times. The Contractor will not be paid additional compensation for this work.

62.04 At all times the Contractor shall be responsible for excluding all persons from land within easement areas and all persons not directly connected with the work or authorized by the City and/or the Project Engineer to be within the project limits.

ARTICLE 63. WORK OUTSIDE REGULAR HOURS

63.01 Night work or work on Saturdays, Sundays or legal holidays requiring the presence of the City, Project Engineer or an Inspector will not be permissible except in the case of emergency and then only upon approval of the Project Engineer. Should it be desired or required for by the City or Project Engineer to operate an organization for continuous night work, the lighting, safety and other facilities that are deemed necessary for performing such night work shall be provided by the Contractor. For night work on Saturdays, Sundays or legal holidays, if any be performed, the Contractor will receive no extra payment. Compensation for such work shall be considered as having been included in the prices stipulated for the appropriate items of work as listed in the bid/proposal.

ARTICLE 64. BUS LINE INTERFERENCE

64.01 Whenever it may be necessary to interfere with any bus lines, notice shall be given to the corporation or agency owning the same. A reasonable amount of time shall be given to said organization in order to rearrange their schedule(s) as may be necessary.

ARTICLE 65. COLD WEATHER WORK

65.01 The Project Engineer will determine when low temperature conditions are unfavorable for work and may order the work, or any portions of it, suspended whenever, in his opinion, the conditions are not such as will insure first class work.

65.02 All methods and materials used in the performance and for the protection of the work in cold weather shall be subject to the approval of the Project Engineer. The Contractor shall take the necessary precautions to protect the work from damage and to remove ice and frost from materials. The removal shall include all necessary heating and the additional removal of any resultant water. The Contractor shall also supply any required sand and/or coarse aggregate required to prevent slipping on ice.

65.03 Except for specific work for which the City has issued a Certificate of Limited Acceptance of the Work, the Contractor shall be responsible for maintaining the project roadways, sidewalks, ramps, driveway aprons and asphalt pathways from the time of contract signing until the issuance of a Notice of Project Acceptance by the City. This responsibility will include snow and ice removal, sanding and mechanical sweeping, and patching with materials approved by the Project Engineer for all roadways, sidewalks, ramps, driveway aprons and asphalt pathways, etc. within the project limits.

65.04 The Contractor shall not continue road excavation after bituminous concrete plants have shut down for the winter. At that time, the Contractor shall request a "winter shutdown". The Contractor shall receive no extra payment for any labor, apparatus, tools or materials necessary to comply with the above requirements, but compensation shall be construed items of work as listed in the bid/proposal form.

ARTICLE 66. BLASTING AND EXPLOSIVES

66.01 No blasting shall be allowed without the Contractor's securing of a permit and permission from the office of the Waterbury Fire Marshall. The Marshall's office is located at 185 South Main Street, Garden Level, (1 Jefferson Square), Waterbury, CT 06702 Phone: (203) 597-3452. The Marshall's office must be advised between 7:00 AM

and 10:30 AM of each day's blasting schedule.

66.02 Explosives for blasting shall be stored, handled and used in accordance with the laws, ordinances and regulations of the State of Connecticut; with all local regulations and with such other additional regulations as the City Representative may require. Blasting shall be conducted so as not to endanger persons or property. The Contractor shall be responsible for, and shall make good any damages of whatever nature caused by blasting or accidental explosions.

66.03 The Contractor shall also adhere to any additional conditions imposed by the Fire Marshall's office. Additionally, the Contractor shall have a pre-blast survey conducted of the adjacent area(s) at no cost to the City.

66.04 Steel or rubber matting shall be used at all blast sites where required by the Bureau of Fire Prevention. Any blast or shot involving more than 99 pounds of explosives must be monitored by the use of seismographs. All seismographs are at the expense of the Contractor. Wire and debris must be cleared from all areas.

66.05 The Contractor shall notify each utility with facilities in proximity to the site of such blasting operations, and any other individuals and entities that may be affected thereby of the Contractor's intention to use explosives; and such notice shall be given sufficiently in advance of any blasting to enable such affected parties to take steps to prevent such blasting from injuring persons or property. Such notice shall not relieve the Contractor of responsibility for damage resulting from its blasting operations.

66.06 Where blasting is required subsequent to commencement of construction, insurance, as required by the City's Risk Manager shall be obtained by the Contractor, and approved by the City's Risk Manager.

ARTICLE 67. TUNNELING

67.01 Tunneling will not be permitted without the express written consent of the City.

ARTICLE 68. RESERVED MATERIALS/EXCAVATED MATERIALS

68.01 Materials excavated from trenches and excavations and those used in the construction of the work shall be deposited in such a manner so that they not endanger persons or the work. Materials shall also be deposited in such a manner that free access may be had at any time to all hydrants and gates near the work. The materials shall be kept trimmed-up so to be of as little inconvenience as possible to public travel or to adjoining tenants. All excavated materials not approved for backfill and/or fill; all surplus material; all rock and all boulders resulting from excavations shall be removed and satisfactorily disposed of off the site by the Contractor at no additional cost to the City.

68.02 Any excavated material not used in the installation of contracted items shall be removed from the site and legally disposed of by the contractor.

ARTICLE 69. OBSTRUCTIONS AND CROSSOVERS

69.01 Whenever any trench or other excavation obstructs pedestrian and/or vehicular traffic in or to any public street, private driveway or property entrance or to private property, the Contractor shall employ such means as may be necessary to maintain pedestrian and vehicular traffic and access. The Contractor shall construct and maintain suitable plank crossings and bridges to carry essential traffic in or to the street, driveway or property in question as specified or as directed. These crossings shall be maintained for as long as it is not expedient to backfill the excavation or until such time as sufficient, supportive backfill may be placed. No additional payment will be made for this work.

69.02 Movement of construction equipment and all other vehicles and loads over and adjacent to any slotted drain pipe shall be done at the Contractor's risk. Any pipe or backfill which becomes damaged or disturbed through any cause shall be replaced or repaired as directed by the City at the expense of the Contractor and at no cost to the State. Suitable temporary crossovers consisting of steel plate or other materials approved by the City shall be employed for a minimum of 7 consecutive calendar days following concrete backfill operations in all areas where vehicular traffic must be maintained or until such time as the pipe installation will withstand loading without damage. All concrete surfaces shall receive a protective coating. End cap installation shall be as recommended by the manufacturer.

ARTICLE 70. DIRECTIONAL SIGNS AND LIGHTS

70.01 Suitable signs, lights and such required items to direct traffic shall be furnished and maintained by the Contractor. No additional payment shall be made for this work.

ARTICLE 71. MAINTENANCE OF WORKPLACE

71.01 The Contractor must keep streets and premises free from unnecessary obstructions, debris and all other materials. The City or Project Engineer may, at any time, order all equipment, materials and surplus from excavations to be removed from the work area. Debris and all other materials lying outside of the working area shall be promptly removed. Should the Contractor fail to remove such material within 24 hours of notice to remove, the City or Project Engineer may cause any or all of said materials to be removed by others. The cost of this removal shall be deducted from any monies, which may be, or may become, due the Contractor under the Contract. In special cases, the City or Project Engineer may cause such materials to be removed without prior notice.

ARTICLE 72. OPERATIONS AT SEVERAL POINTS

72.01 The Contractor may carry on the work simultaneously at more than on point only if, in the opinion of the City or Project Engineer, such action is acceptable and is necessary to insure completion of the work within the specified time.

72.02 The Contractor's Construction Progress Schedule shall be adjusted to provide for work being simultaneously conducted at more than one point (location) at the site or sites.

ARTICLE 73. INTERFERENCE WITH EXISTING STRUCTURES

73.01 Whenever it may be necessary to cross or to interfere with existing culverts, drains, sewers, water pipes or fixtures, guard rails, fences, gas pipes or fixtures or other structures needing special care, due notice shall be given to the City or Project Engineer. Work involving these items shall be done according to the City's or Project Engineer's directions. Whenever required, all objects shall be strengthened to meet any additional stress that the work herein specified may impose upon it. Any damages that may occur shall be thoroughly repaired. If so directed by the City or Project Engineer, the location of any existing work shall be changed to meet the requirements of the proposed work, if necessary, to leave all in good working order. The entire work shall be the responsibility of the Contractor and the work shall be done at no additional expense to the City.

73.02 The Contractor shall be responsible for repairing all broken or damaged mains or utilities, property markers, monitoring wells, and other existing structures to remain, or outside the Limit of Work, during the progress of the Work. The Contractor shall repair and shall be responsible for all damages to existing utilities and structures with no additional expense to the City. The Contractor shall contact the proper utility or authority to correct or make any changes due to utility or other obstructions during the prosecution of the work, but the entire responsibility and expense shall be with the Contractor.

73.03 All damaged items of work or items required to be removed and replaced due to construction shall be replaced or repaired by the Contractor to the complete satisfaction of the City and/or utility at no additional expense to the City.

ARTICLE 74. TURF, TOPSOIL AND OTHER REPLACEMENT ITEMS

74.01 Where the construction runs through cultivated or sodded lands, the Contractor shall stockpile the turf and topsoil separately and replace the same after the excavation is filled. The Contractor shall leave the land as nearly as possible in its original condition. Trees, fences, walls, walks and other items must not be damaged.

ARTICLE 75. MATERIALS

75.01 All materials furnished and used in the completed work shall be new, of best quality, workmanship, and design and shall be recognized as standard in good construction practices. Whenever a specification number or reference is given, the subsequent amendments (if any) shall be included. The standards set forth in the selection of

materials and supplies are intended to conform to those standards adopted by the City. Preference in manufacture shall be given to familiarize the Contractor with the requirements of the Project Engineer when the occasion or choice of materials or supplies so demands.

ARTICLE 76. DEFECTIVE MATERIALS

76.01 No materials shall be laid, installed or used which are known to be, or which may be found to be, in any way defective. Notice shall be given to the Project Engineer of any defective or imperfect material. Defective or unfit material found to have been laid, installed or used shall be removed and replaced by the Contractor with unobjectionable material. This removal and replacement shall be made without additional expense to the City.

ARTICLE 77. INSPECTION AND TESTING OF FURNISHED MATERIALS

77.01 Unless herein provided otherwise, all materials furnished by the Contractor are subject to thorough inspections and tests by the Project Engineer. Any materials condemned or rejected by the Project Engineer as not conforming to the specifications may be branded or otherwise marked. Branded or marked material shall be, on demand, at once removed by the Contractor to a satisfactory distance from the site. Removed materials shall not again be brought upon or near to the work.

ARTICLE 78. SAMPLES AND ORDERING LISTS

78.01 Unless herein provided otherwise, the Contractor shall submit samples of the various materials used on the contract as required by the specifications for testing purposes. All ordering lists shall be submitted by the Contractor to the Project Engineer for approval and must be approved before the ordering of the materials.

ARTICLE 79. SANITARY CONVENIENCES

79.01 Adequate sanitary conveniences, properly secluded from public observation, for the use of workmen on the premises shall be provided and maintained by the Contractor in accordance with the requirements of local and State health authorities. These conveniences shall be maintained in such manner and at such points as shall be approved and their use shall be strictly enforced. Sanitary waste shall be treated and disposed of in a manner satisfactory to, and as directed by, the City and/or the local and State health authorities. Under no circumstances shall sanitary waste be allowed to flow on the surface of the ground or in the work area.

79.02 The cost of sanitary conveniences and the maintenance of same will not be paid for separately, but compensation will be considered to be included in the prices stipulated for the items of work as listed in the bid/proposal form.

ARTICLE 80. FINISHING AND CLEANING UP

80.01 In completing any backfilling operation, the Contractor shall replace all surface material to the satisfaction of the City. The Contractor shall then immediately remove all surplus material, all tools, and other property belonging to him. The Contractor shall leave the entire street or surrounding area free and clean, in good order and at no additional expense to the City. Backfilling and removal of surplus materials shall follow closely upon the completion of the work. The Contractor shall exercise special care in keeping rights-of-way and private and public lands, upon which work is being performed, clean and free of debris at all times. The Contractor will remove tools and other property belonging to him when they are not being used.

80.02 In case the Contractor shall fail or neglect to promptly remove all surplus materials, tools and other incidentals after backfilling, or shall neglect to do required paving promptly, the City or Project Engineer may, after 24 hours notice, cause the work to be done and the cost thereof shall be deducted form any monies then or thereafter due the Contractor.

ARTICLE 81. RIGHTS OF ACCESS

81.01 Nothing herein contained or shown on the drawings shall be construed as giving the Contractor exclusive occupancy of the work area involved. The City or any other Contractor employed by the City, the various utility companies, contractors or sub-contractors employed by Federal, state or local government agencies involved in

the general project or upon public rights-of-way, may enter upon or cross the area of work or occupy portions of it as directed or permitted. When the territory of one contract is the convenient means of access to the other, each contractor shall arrange his work in such manner as to permit such access and to prevent unnecessary delay in the work as a whole. Said access rights shall also include all Federal and state agencies and their representatives that have an interest in said project.

ARTICLE 82. WORK BY OTHERS

82.01 The City reserves the right to do any other work which may connect with, or become a part of, or be adjacent to the work embraced by this Contract, at any time, by contract work or otherwise. The Contractor shall not interfere with, nor obstruct in any way, the work of such other persons as the City may employ. The Contractor shall execute his own work in such a manner as to aid in the execution of work by others as may be required. No excavations or backfilling will be permitted if other work by the City will be affected.

ARTICLE 83. WORK WITHIN THE LIMITS OF PRIVATE PROPERTY

83.01 Particular attention is hereby directed to the fact that some of the work included under this Contract may have to be done within the limits of properties that are publicly or privately owned. The City, where necessary has, or will have, secured the necessary easements to these properties for construction purposes. The Contractor will be permitted to utilize the areas of the City's easements, subject to all of the conditions and requirements as they may affect the Contractor's operations. The Contractor shall conduct his operations and activities in the performance of the work with all such conditions and requirements as may be imposed by the City or Project Engineer.

83.02 All means and rights of ingress and egress to the work areas and all other areas required for work space, in addition to the City's easements, shall be the entire responsibility of the Contractor, All costs in connection therewith shall be considered to be included in the prices stipulated for the appropriate items of work as listed in the bid/proposal form.

83.03 The Contractor shall neither use nor occupy public or private lands outside the limits of the City's easements and rights-of-way unless written permission from the owner of the public or private lands have first been obtained. Copies of the written agreements shall be submitted to the Project Engineer prior to entering upon such lands. The Contractor shall be responsible for cooperating with, and for coordinating the prosecution of, the work of this Contract with the public and private property owner. Any abuse to the lands of the public and private property owner shall be immediately corrected by the Contractor, at the Contractor's expense, to the complete satisfaction of the property owner. The Contractor shall take such precautionary measure, as required by the City, to prevent further nuisances, interference or inconvenience to abutting property owners.

83.04 It shall be the Contractor's full responsibility to be familiar with the limitations imposed upon the work of construction within the various properties of public or private ownership and rights-of-way by existing occupancy or use. The Contractor will be required to make every effort to fully and satisfactorily protect trees, shrubs, lawns, gardens, fences, walks, driveways, structures and all and any other appurtenances of the property owners.

83.05 The Contractor shall provide adequate access to all walks, driveways, yards or structures: shall protect all work by the erection or placement of safety guards or barriers, lights and such other incidentals; and where required, shall construct temporary plank crossings or timbers to permit full use of private facilities at all times. All of these actions are to be performed at no additional expense to the City. All other applicable provisions for control of work within the areas of public travel set forth elsewhere herein shall also apply to work within the limits of private ownership.

83.06 The Contractor shall cooperate with the public and private property owners and shall also contact the City and Project Engineer for additional information regarding the requested (or required) length of time needed as a notice to be given to the public or private property owner before the Contractor enters their property to start the construction. In some cases, a certain time to start the work and a certain limited length of time may be required to complete the work on public and private property owners. Furthermore, the contactor may be required to shutdown construction operations as necessary to prevent undo interference with the operation of private and public business within the project area.

83.07 Before proceeding with construction operations, the Contractor shall provide suitable and substantial gates or other approved forms of closing gap devices in every fence within the limits of the owner's easements through which the Contractor intends to move or pass equipment and materials. It is the responsibility of the Contractor to negotiate with the owner of each fence all of that owner's requirements, in addition to those specified above. It shall also be the responsibility of the Contractor to comply with all requirements as specified herein and as agreed to with the owner's in a manner satisfactory to the owner.

83.08 No separate payment will be made for the requirements specified under "WORK WITHIN THE LIMITS OF PRIVATE PROPERTY" and all cost in conjunction therewith shall be included in the prices stipulated for the appropriate items of work as listed in the bid/proposal form.

ARTICLE 84. LOADING

84.01 No part of the structures involved in this Contract shall be loaded during construction with a load greater than that calculated for the safety of the structure. Should any accidents or damage occur through any violation of this requirement, the Contractor will be held responsible. If necessary, the Contractor shall request, in writing, the allowable loading from the Project Engineer.

ARTICLE 85. COMPLETION OF WORK

85.01 In addition to the specified or described portions, all other work and all materials, equipment and labor of whatever description which are necessary or required to complete the work, or for carrying out the full intent of the drawings and specifications, as interpreted by the Project Engineer, shall be provided by the Contractor. Payment therefore shall be considered as having been included in the prices stipulated for the appropriate items of work as listed in the bid/proposal form.

ARTICLE 86. DUST AND SPILLAGE CONTROL

86.01 The Contractor shall exercise every precaution to prevent and to control dust arising out of all construction operations from becoming a nuisance. Water shall be provided and applied as required or as ordered by the Project Engineer for allaying dust conditions. Pavements adjoining excavations shall be kept swept and/or washed clean of excess excavated material wherever and whenever directed. Earth piles adjacent to excavations, earth stockpiles and surfaces of refilled excavations shall be kept moist at all times as directed. No extra payment will be made for providing the dust control measures and for conforming to the requirements specified above. Compensation therefor shall be considered included in the prices stipulated for the appropriate items of work as listed in the bid/proposal form.

86.02 The Contractor shall take appropriate measures to control the generation of dust from its activities. Water shall be provided and applied as required or as ordered by the Project Engineer for allaying dust conditions.

86.03 All vehicles utilized by the Contractor for delivery or removal of materials shall have appropriate covers to prevent spillage of material during transit.

ARTICLE 87. CARE OF THE WORK

87.01 The Contractor shall be responsible for all damages to persons or property that occur as a result of the Contractor's fault or negligence concerning the prosecution of the work. The Contractor shall also be responsible for the proper care and protection of all material delivered and of all work performed until the issuance of a Notice of Project Acceptance by the City, whether or not the same has been covered by partial payments authorized by the Project Engineer.

ARTICLE 88. EMERGENCY WORK

88.01 The Contractor shall file, with the City Engineer and the Project Engineer, if any, the name and telephone number of a person authorized by him who may be contacted regarding emergency work at the job site that may be required during non-working hours for reasons of public safety. This person shall be readily available and shall have full Authority to deal with any emergency that may occur.

ARTICLE 89. FIRE PREVENTION AND PROTECTION

89.01. All Federal laws (Occupational Safety and Health Act) and all state and municipal rules and regulations with respect to fire prevention, fire-resistant construction and fire protection shall be strictly adhered to by the Contractor. All work and facilities necessary therefore shall be provided and maintained by the Contractor in an approved manner.

89.02. All fire protection equipment (as per 89.01 above) shall be provided by the Contractor for the protection of the contract work including temporary work and adjacent property. Personnel experienced in the operation of the fire protection equipment and apparatus shall be available whenever work is in progress and at such other times as may be necessary for the safety of the public and of the work.

89.03. Open fires will not be permitted.

ARTICLE 90. PLANIMETER

90.01 For estimating quantities, where the computations of areas by analytic and geometric methods would be comparatively laborious, it is stipulated and agreed that the planimeter shall be considered an instrument of precision adapted to the measurement of such areas, as utilized by an engineer.

ARTICLE 91. SUPERINTENDENCE

91.01 During the entire duration of the project, the Contractor shall employ a competent superintendent in personal charge of the work. The superintendent shall be present during all phases of construction and shall have full authority to act for the Contractor. The superintendent shall be continued in this capacity full time for this project unless (1) the person ceases to be on the Contractor's payroll or (2) the person proves to be unacceptable to the City or Project Engineer. Instructions given to the superintendent and/or supervisory subordinates shall be considered as given to the Contractor. A chain-of-command listing shall be submitted by the Contractor to the City and Project Engineer and shall be adhered to in the temporary absence of the superintendent.

ARTICLE 92. CONTRACT ADMINISTRATION COSTS - OUTSIDE REGULAR HOURS

92.01 The working schedule shall be confined to a five (5) day week ending on Friday. The working day shall be any eight-hour period beginning no earlier than 7:00 AM and ending no later than 7:00 PM. Whenever the Contractor elects to perform work on Saturdays, Sundays or legal holidays observed by the City or to work in excess of the normal working hours stated above, the Contractor shall pay to the City the extra cost incurred by the City due to the increased cost of contract administration. Payment shall include all cost of inspection and administration for such Saturday, Sunday or legal holiday work or for work in excess of the normal working day, which the City is obligated to incur and for the extra expense involved in overtime work resulting from the performance of work on these days.

92.02 No work outside regular hours or overtime work shall be planned or executed without the approval of the City.

ARTICLE 93. DAILY REPORTS

93.01 The Contractor shall submit daily activity reports on an approved form for the duration of the project. The report shall indicate all personnel currently employed on the work, including each trade and every subcontractor; all equipment and whether that equipment was idle for the particular day; a general description of all work accomplished and any authorized extra work (time and material reports shall be submitted on separate forms).

ARTICLE 94. MATERIAL AND WORKMANSHIP

94.01 All materials and workmanship incorporated in the work covered by this Contract are to be of the highest grade of their respective kinds for the purpose intended. The Contractor shall furnish to the Project Engineer for approval the name of the manufacturer of machinery and mechanical or other equipment that the Contractor contemplates incorporating in the project together with their respective performance capacities and other pertinent information.

94.02 When required by the Specifications, or when called for by the City or Project Engineer, the Contractor shall furnish the required information for approval of all material that the Contractor contemplates incorporating in the work. Samples of material shall be submitted for approval to the Project Engineer when and as directed. Machinery, equipment and material installed or used without approval shall be at the risk of subsequent rejection.

ARTICLE 95. TEMPORARY WATER SUPPLY

95.01 In the event temporary water supply work is required, it shall be provided in accordance with the requirements of the Waterbury Water Bureau and all local and state health authorities. The Contractor shall provide and maintain facilities for an adequate supply of water suitable for use for construction purposes and for domestic use as required for the work of this Contract. The cost of all work, materials, equipment, appurtenances and accessories necessary for providing supplies of water at the site, including the cost of all water consumed, shall be borne by the Contractor.

95.02 Upon Substantial Completion to the work of this Contract, and before Final Completion of the Project, the Contractor shall remove all temporary piping and appurtenant work used for the temporary water supply.

ARTICLE 96. FITTING AND COORDINATION OF WORK

96.01 The Contractor shall be responsible for the proper fitting of all work and for the coordination of operations of all trades, subcontractors or material suppliers engaged in the work. The Contractor shall be prepared to guarantee to each of his subcontractors the dimensions for which they may require for the fitting of their work to all surrounding work. The Contractor shall do, or shall cause his agents to do, all cutting, fitting, adjusting and patching necessary to make the several parts of the work come together satisfactorily and properly and to fit the work to receive, or to be received by, the work of other contractors.

ARTICLE 97. ARCHEOLOGICAL FINDS

97.01 During the life of this Contract, in the event that any articles such as "charcoal", "bone", "shell", "cultural objects", "fire-cracked stones", "stone flaking material." or any other such related items of historical significance are discovered on the project, the Contractor is required to notify:

(1)The City
(2) Project Engineer or Inspector

ARTICLE 98. EXCAVATIONS NEAR UNDERGROUND UTILITIES

98.01 In conformance with Section 16-345 of the Regulations of the Department of Public Utility Control, the Contractor shall not start any excavation and/or blasting of rock activity without first having ascertained the location of all such utilities in the area. The Contractor shall notify the Public Utilities Regulatory Authority (PURA) "CALL BEFORE YOU DIG" (Toll Free 1- 800-922-4455) at least two (2) full days in advance (excluding Saturday, Sunday and legal holidays), but no more than thirty (30) days before starting any such work. Such notice shall include the name, address and telephone number of the persons/agency performing the work, the date, location and type of excavation.

98.02 The PURA should immediately transmit such information to the utility companies whose facilities may be affected. Utility companies receiving notice should mark-up the locations of their facilities on the work site. If they have no facilities in the area, they shall so inform the Contractor. If the Contractor does not receive any information or marked-up locations on the work sites, the Contractor shall contact PURA again to verify that the utility companies have responded to the initial call. Under no circumstances will the Contractor be allowed to start any excavation and/or blasting work prior to obtaining all necessary information regarding the location of underground utilities at the site. It is the Contractor's responsibility to have all utilities marked on the work sites prior to starting the work.

ARTICLE 99. WATER QUALITY OF WELLS

99.01 The Contractor shall perform all tests required by the State Health Department on all water supply wells and reservoirs where directed by the City or Project Engineer before and after construction. All labor, materials and testing shall be paid by the Contractor at no cost to the City.

ARTICLE 100. WORK IN STATE HIGHWAYS

100.01 If any of the work under this Contract is in a state highway the Contractor shall obtain all required permits at his own expense. The Contractor shall perform the work in accordance with the terms and conditions stipulated by the Connecticut Department of Transportation (ConnDOT) and/or as required by ConnDOT inspectors. The Contractor must provide such bonds, security and insurance as may be required to obtain such permits.

100.02 In the event the City, or the City and the Contractor jointly, are required to obtain any permits, including detour permits, the Contractor shall be familiar with the conditions of the permits and shall be held responsible for compliance with all the requirements of the permits and all specifications attached thereto, as if the permits were held solely by the Contractor.

100.03 Whenever State inspectors, flagmen or other costs are incurred as a condition to obtaining permits, the Contractor shall be responsible for payment of these costs with no reimbursement from the City.

100.04 The Contractor shall conform to all ConnDOT requirements for materials and construction methods for all work within state highways. Sheeting or an adequate trench box may be required in all trenching operations to confine trench widths and to protect State facilities. Additional pavement replacement may be required to properly restore the roadway surface.

100.05 The cost of all labor, materials and equipment necessary to conform to CONNDOT requirements for work in, or adjacent to, state highways, including work not specifically stated in the Contract Plans and Specifications, shall be the sole responsibility of the Contractor and shall not be reimbursed by the City. Therefore, the Contractor is informed to evaluate all CONNDOT requirements for the project prior to submitting the Bid/Proposal for the project and to include these costs in his bid/proposal prices.

ARTICLE 101. EXISTING INSPECTION REPORTS

101.01 Any existing inspection reports concerning the project which have been prepared by or for the City or Project Engineer will be made available for the Contractor's information.

ARTICLE 102. TEST REPORTS; CERTIFICATES OF COMPLIANCE AND SHIPPING LISTS

102.01 Except where expressly provided otherwise in the Contract Documents, the Contractor shall furnish to the Project Engineer the material manufacturer's notarized test reports and methods of testing by an approved independent laboratory in order to show compliance of all materials furnished with all specification requirements, the reports shall also contain manufacturer's notarized certificates of conformance stating that all materials furnished under these Specifications conform with all specification requirements; that each shipment of materials shall be accompanied by the manufacturer's notarized certificate of conformance and that a shipping list itemizing the amounts of each shipment shall accompany each shipment.

ARTICLE 103. CLEANING FINISHED WORK

103.01 After the work is completed, the sewers, manholes and structures shall be carefully cleaned free of dirt, broken masonry, mortar, construction and other debris and shall be left in first class condition, ready for use. All temporary or excess material shall be disposed of and the work left broom-clean to the satisfaction of the Project Engineer.

ARTICLE 104. COMPLIANCE TO ACTS AND EXECUTIVE ORDERS

104.01 If this Contract is federally assisted and the Contractor must comply with all applicable statutes, acts, executive orders and regulations, including without limitation:

(a) **TITLE VI, CIVIL RIGHTS ACT OF 1964** Provides that no person in the United States shall on the grounds of race, color or national origin be excluded from participation in, be denied the benefits of, or be subjected to discrimination under any program or activity, receiving Federal financial assistance.

(b) **SECTION 3, HUD ACT OF 1968** Provides that, to the greatest extent feasible, opportunities for training and employment shall be given to lower income residents of HUD-assisted project areas, and that contracts for work in connection with such projects be awarded to business concerns which are located in, or are owned in substantial part by persons residing in the area of the project.

(c) **LABOR STANDARDS** Compliance with Davis Bacon Act, as amended (40 U.S.C. 267a-5) Contract Work Hours and Safety Standards Act (40 U.S.C. 327-333) 13.0.

ARTICLE 105 SEMI-FINAL INSPECTION / SUBSTANTIAL COMPLETION

105.1 Contractor shall notify the Project Engineer when it believes the work (or a portion thereof) is Substantially Complete and shall file with the City a written, notarized "Contractor's Affidavit of Substantial Completion" and request a Semi-Final Inspection of the work.

105.2 Contractor, prior to requesting Semi-Final Inspection, shall complete and submit the following, listing known exceptions in its Affidavit of Substantial Completion:

i. Include supporting documentation for Substantial Completion as indicated in these Contract Documents.
ii. Include Drafts of all documentation for Final Completion as indicated in these Contract Documents.
iii. Advise City of outstanding permit closure requirements. Submit certificates of inspections conducted, reports, and other documentation required by local or state authorities.
iv. Where required, submit photographs, specific warranties, final certifications, and similar documents.
v. Provide Partial Waiver of Lien from each Subcontractor, supplier and the Contractor. All money due to Subcontractors and suppliers may be withheld from payment to the Contractor until Waivers of Lien indicate no money owed.
vi. Drafts of all required As-Builts, Record Drawings and Documents and Surveys, in number and formats specified.

105.3 Subsequent to City's receipt of Contractor's Affidavit of Substantial Completion, Project Engineer will either proceed with Semi-Final Inspection or advise Contractor of prerequisites not fulfilled.

105.4 Following Semi-Final Inspection, Project Engineer will either inform the City to prepare a Certificate of Substantial Completion, or advise Contractor of work that must be performed prior to issuance of said certificate, and repeat the inspection when requested and assured that the work has been substantially completed in accordance with the Contract Documents.

105.5 Contractor shall submit its **Semi-Final Payment Application** coincident with, or first following the date claimed as Substantially Complete, which shall be processed in the same manner as a partial payment requisition and shall show either 100% completion for the work claimed as Substantially Complete, and/or list incomplete items, value of incompletion, and reasons for being incomplete.

ARTICLE 106. CITY'S CERTIFICATE OF SUBSTANTIAL COMPLETION

106.1 For the portion of the work determined to be Substantially Complete, the City shall issue "City's Certificate of Substantial Completion" which shall establish the date of Substantial Completion by the Contractor.

106.2 Concurrently, the Project Engineer shall prepare a list (the "punchlist") of remaining items of work to be completed and/or deficiencies to be addressed.

106.3 The City reserves the right to modify, amend and/or update the "punchlist," as it deems necessary.

ARTICLE 107. LIMITED ACCEPTANCE OF WORK

107.01 Limited Acceptance of Portion(s) of the Work shall be at City's sole discretion and shall be subsequent to issuance of City's Certificate of Substantial Completion for such work and shall relieve Contractor of responsibility for the physical aspects of said portion of the work; however such termination of responsibility for the physical aspects of the work in no way affects or diminishes any other contractual requirements governing the work so accepted, or the issuance of a Notice of Project Acceptance of the Project as whole.

107.02 Documentation of any Limited Acceptance of Portion(s) of the Work shall be evidenced by City's issuance of a Certificate of Limited Acceptance of Work for such Work.

ARTICLE 108. FINAL INSPECTION

108.01 Contractor shall notify the Project Engineer when it believes the Project is Finally Complete and shall file with the City a written, notarized "Contractor's Affidavit of Final Completion" and request a Final Inspection of the work by the Project Engineer.

108.02 Subsequent to receipt of Contractor's Affidavit of Final Completion, Project Engineer will either proceed with Final Inspection and/or advise Contractor of prerequisites not fulfilled.

108.03 At the time of submission of its Affidavit of Final Completion, Contractor, as required by the Contract Documents and/or required for completion of the Project as determined by the City, shall also provide and/or submit the following:

i. Supporting documentation required by the Contract Documents not previously submitted and accepted.
ii. Discontinue and remove, as appropriate, temporary facilities and services, along with construction tools and facilities, and similar elements.
iii. A copy of City's final punch list of itemized work to be completed or corrected, stating that each item has been completed or otherwise resolved for acceptance, endorsed and dated by the Project Engineer.
iv. Final and complete versions of all required As-Builts, Record Drawings and Documents and Surveys, in number and formats specified.
v. Provide Final Waiver of Lien from each Subcontractor, supplier and the Contractor. All money due to Subcontractors and suppliers shall be withheld from payment to the Contractor until Waivers of Lien indicate no money owed.

108.04 Following Final Inspection, Project Engineer either informs advises Contractor of work that must still be performed, etc., and the process repeats or advises the City that that the Project is Finally Complete.

ARTICLE 109. FINAL CHANGE ORDER

109.01. Upon determination that Final Completion has been reached, the City shall, if necessary, prepare a **Final Change Order.** The "**Final Change Order**" shall show the total due Contractor under the Contract, including a final estimate of all quantities. Should there be a decrease in quantities, then such variations will be computed at the unit prices in the bid/proposal form and reflected in the **Final Change Order** by adding or deducting said amounts from the from the gross sum, as applicable.

109.02 The **Final Change Order** shall reflect the final Contract Amount, all prior City payments to the Contractor, all adjustments to the Contract Amount, all retainage held by the City, any liquidated damage amounts, all unused amounts of any Owner Controlled Allowances and of all Cash Allowances, all adjustments for Alternates accepted/declined by the City and final amount of any holdback(s) by the City.

109.03 All certificates of payments and estimates, upon which partial payments may have been made being merely estimates, shall be subject to correction by this **Final Change Order**.

109.04 Contractor shall execute the Final Change Order upon issuance by the City.

109.05 All Contractor's subsequent payment requisitions shall reflect the amounts and qualities set forth in the Final Change Order.

ARTICLE 110. FINAL PAYMENT APPLICATION

110.01 Based upon the amounts and qualities set forth in the Contract Documents, as may be revised by the Final Change Order, the Contractor shall submit its Final Payment Application requesting Final Payment due under the Contract, including all retainage held by the City.

110.02 All prior estimates and City payments, including those relating to extra or additional work, retainage(s), and holdback(s), shall be subject to correction by this Final Payment.

110.02 This Final Payment Application shall be certified as to its correctness by the Project Engineer and will be processed in the same manner as the partial payment requests.

ARTICLE 111. FINAL COMPLETION / CITY'S CERTIFICATE OF FINAL COMPLETION / NOTICE OF PROJECT ACCEPTANCE

111.01 Final Completion and Project Acceptance shall occur when:

i. All Project work and services have been completed and all required documentation/paperwork has been submitted in accordance with the Contract Documents.

ii. Contractor's **Final Payment Application** has been submitted, certified as to correctness by the Project Engineer, and submitted for processing of Final Payment.

iii. Upon written determination by Project Engineer that items (i) and (ii) above are complete, the City shall issue its **Certificate of Final Completion and Notice of Project Acceptance** to Contractor, establishing therein the date of Final Completion.

ARTICLE 112. ACCEPTANCE OF FINAL PAYMENT

112.01 The acceptance by the Contractor, or by anyone claiming by or through the Contractor, of Final Payment shall constitute and operate as a release for the City from any and all claims of any liability to the Contractor for anything, theretofore done or furnished for or relating to or arising out of the work done thereunder, and for any prior act of neglect, default on the part of the City or any of its officers, agents, or employees unless the Contactor serves a detailed and verified statement of claim upon the City not later than forty (40) consecutive calendar days after mailing of such Final Payment. Such statement shall specify the items claimed. Should the Contractor refuse to accept the Final Payment as tendered, it shall constitute a waiver of any right of interest thereon.

ARTICLE 113. 10-HOUR OSHA CONSTRUCTION SAFETY AND HEALTH COURSE

113.01 The Contractor, or any subcontractors working on the project, shall provide written proof that any and all employees working on the project jobsite have successfully completed the 10-Hour OSHA Construction Safety and Health Course.

END OF SECTION

Attachment B-1

NON-DISCRIMINATION CONTRACT LANGUAGE

Pursuant to Connecticut General Statutes Section 4a-60 and except as provided in section 10a-151i of the General Statutes, every contract to which a state agency or political subdivision of the state, including a municipality or quasi-public agency, is a party to shall contain the following provisions:

(1) The contractor agrees and warrants that in the performance of the contract such contractor will not discriminate or permit discrimination against any person or group of persons on the grounds of race, color, religious creed, age, marital status, national origin, ancestry, sex, sexual orientation, gender identity or expression, status as a veteran, status as a victim of domestic violence, status as a victim of sexual assault or status as a victim of trafficking in persons, intellectual disability, mental disability or physical disability, including, but not limited to, blindness, unless it is shown by such contractor that such disability prevents performance of the work involved, in any manner prohibited by the laws of the United States or of the state of Connecticut; and the contractor further agrees to take affirmative action to ensure that applicants with job-related qualifications are employed and that employees are treated when employed without regard to their race, color, religious creed, age, marital status, national origin, ancestry, sex, gender identity or expression, sexual orientation, status as a veteran, status as a victim of domestic violence, status as a victim of sexual assault or status as a victim of trafficking in persons, intellectual disability, mental disability or physical disability, including, but not limited to, blindness, unless it is shown by such contractor that such disability prevents performance of the work involved;

(2) The contractor agrees, in all solicitations or advertisements for employees placed by or on behalf of the contractor, to state that it is an "affirmative action-equal opportunity employer" in accordance with regulations adopted by the Commission on Human Rights and Opportunities;

(3) The contractor agrees to provide each labor union or representative of workers with which such contractor has a collective bargaining agreement or other contract or understanding and each vendor with which such contractor has a contract or understanding, a notice to be provided by the Commission on Human Rights and Opportunities advising the labor union or workers' representative of the contractor's commitments under this section, and to post copies of the notice in conspicuous places available to employees and applicants for employment;

(4) The contractor agrees to comply with each provision of this section and sections 46a-68e and 46a-68f and with each regulation or relevant order issued by said commission pursuant to sections 46a-56, 46a-68e, 46a-68f and 46a-86; and

(5) The contractor agrees to provide the Commission on Human Rights and Opportunities with such information requested by the commission, and permit access to pertinent books, records and accounts, concerning the employment practices and procedures of the contractor as relate to the provisions of this section and section 46a-56.

Waterbury Board of Education

THE CITY OF WATERBURY 236 Grand Street | Waterbury, CT 06702 203-574-8009

Elizabeth C. Brown
President

October 8, 2026

Honorable Board of Aldermen
c/o City Clerk
City of Waterbury
235 Grand Street
Waterbury, CT 06702

Ladies and Gentlemen:

We request your review and approval, subject to the Board of Education's anticipated approval at its rescheduled regular meeting of October 8, 2026, of a Professional Services Agreement with SGNL Communications, LLC, in the not to exceed amount of $346,304.25, for a Bi-Directional Amplifier Radio System at the Laurel Hill Complex.

Respectfully,

Carrie A. Swain, Clerk
Waterbury Board of Education

WATERBURY
PUBLIC SCHOOLS

Rebecca Gonzalez
Chief Operating Officer
(203) 346-2340
Rebecca.Gonzalez@waterbury.k12.ct.us

EXECUTIVE SUMMARY

DATE: October 5, 2026

TO: Honorable Board of Education Commissioners
Honorable Board of Aldermen Members

FROM: Rebecca Gonzalez, Chief Operating Officer

RE: Professional Services Agreement for a Bi-Directional Amplifier Radio System for Laural Hill Complex with SGNL Communications, LLC

The Education Department respectfully requests approval of a professional services agreement with SGNL Communications, LLC for the installation of a Bi-Directional Amplifier (BDA) Radio System at the Laurel Hill Complex, serving Wilby High School and North End Middle School.

Recent lockdown exercises identified significant gaps in Police and Fire radio coverage throughout portions of the complex, creating a public safety concern for School Resource Officers and emergency responders.

The proposed BDA system will provide reliable public safety radio coverage throughout the complex, enabling Police and Fire personnel to maintain communication with the City's public safety radio system and dispatch. The system will be designed and installed in accordance with the 2022 Connecticut State Fire Safety Code and applicable NFPA 1225 requirements.

The District successfully implemented a similar BDA radio system at Crosby High School in 2025, providing a proven approach to addressing emergency radio coverage deficiencies within our school facilities.

Contract Amount: $346,304.25
Funding Source: District Repair and Improvement Project (DRIP) Funds
Project Duration: Six months from contract execution
Project Oversight: Director of Security and School Safety

SGNL Communications will provide the equipment, installation, testing, commissioning, integration, project management, and ongoing 24/7 preventive and corrective maintenance services.

Approval of this agreement will address a critical emergency communications deficiency and enhance the safety and emergency response capabilities of the Laurel Hill Complex.

Thank you for your consideration.

c: Mike Konopka

PROFESSIONAL SERVICES AGREEMENT
for a
Bi-Directional Amplifier Radio System
for
The Laural Hill Complex
between
The City of Waterbury
and
SGNL Communications, LLC

THIS AGREEMENT (the "Agreement" or "Contract"), effective on the date signed by the Mayor, is by and between the City of Waterbury, Connecticut (the "City"), located at City Hall, 235 Grand Street, Waterbury, Connecticut 06702 and SGNL Communications, LLC (the "Consultant", collectively with the City, the "Parties"), located at 96 Bank Street, Waterbury, Connecticut 06702, a State of Connecticut duly registered domestic limited liability company.

WHEREAS, the Consultant submitted a quote to the supply and installation of a Bi-Directional Amplifier at the Laural Hill Complex (the "Project"); and

WHEREAS, the City desires to obtain the Consultant's services to complete the Project pursuant to the terms, conditions and provisions set forth in this Agreement.

NOW THEREFORE, THE PARTIES AGREE AND COVENANT AS FOLLOWS:

1. Scope of Services. The Consultant shall furnish all of the labor, services, equipment, materials, reports, plans, specifications, deliverables, incidentals, etc. necessary to complete the Project as specified in this Agreement and such shall be completed in a satisfactory manner, as reasonably determined by the City, including staff training for operation, monitoring and basic troubleshooting of the bi-directional amplifier radio system. All labor, services, equipment, materials, reports, plans, specifications, deliverables, incidentals, etc. shall comply with any and all applicable Local, State and Federal laws, statutes, ordinances and regulations and with generally accepted professional standards. The Consultant shall make such revisions or modifications to its work, at its own cost and expense, as the City may require in order for it to be deemed complete. The Project is funded by The Connecticut District Repair and Improvement Project ("DRIP") Program, and the Consultant shall comply with all regulations and guidelines governing such funding.

1.1. The Project at the Laural Hill Complex consists of the installation of the radio system as detailed and described in **Attachment A**. **Attachment A** shall consist of the following, which are attached hereto, are acknowledged by the Consultant as having been received, or are otherwise hereby incorporated by reference as noted below, and all are made a part hereof:

1.1.1 Consultant's Quote, consisting of 3 pages and dated May 14, 2026 (attached

hereto);

1.1.2 Any and all amendments and change orders, issued by the City after execution of Contract, incorporated herein by reference;

1.1.3 General Conditions (attached hereto);

1.1.4 City Contract Compliance Documents, incorporated herein by reference;

1.1.5 Certificates of Insurance, incorporated herein by reference;

1.1.6 Licenses, incorporated herein by reference; and

1.1.7 All applicable Federal, State, and local statutes, regulations charter and ordinances, including all regulations and guidelines of the DRIP Program, incorporated herein by reference.

1.2. The entirety of **Attachment A** plus this executed instrument are together deemed the Contract Documents (hereinafter collectively referred to as "Contract Documents"). The City's record copy of the Contract Documents shall control and shall be effective and binding on the Consultant. In the event that any provision in the Contract Documents conflict with any other provision therein, the provision in the component part of the Contract Document first enumerated below shall govern over any other component part which follows it numerically:

1.2.1 All applicable Federal, State, and local statutes, regulations, charter, and ordinances;

1.2.2 Any and all amendments and change orders, issued by the City after execution of this Contract;

1.2.3 This Contract;

1.2.4 General Conditions: and

1.2.5 Consultant's Quote.

2. Consultant Representations Regarding Qualification and Accreditation. The Consultant represents that, to the extent required by law, its employees are licensed to perform the scope of work set forth in this Contract. The Consultant further represents that its employees have the requisite skill, expertise and knowledge necessary to perform the scope of work required under the terms of this Contract, including any supplementary work and the City relies upon these.

2.1. Representations Regarding Personnel. The Consultant represents that it has, or will secure at its own expense, all personnel required to perform the services under this Contract. Such personnel shall not be employees of or have any contractual relationship with the City, unless the use of City employees or of personnel having a contractual relationship with the City is approved by the City in writing. As set forth above, all the services required hereunder shall be performed by the Consultant under its supervision and all personnel engaged in the work shall be fully qualified and shall be authorized or permitted under state or local law to perform such services.

2.2. Representations Regarding Qualifications. The Consultant hereby represents that, to the extent required by Federal, State and Local statutes, regulations, codes, ordinances, and policies, that the Consultant and/or its employees be licensed, certified, registered, or

otherwise qualified, the Consultant and all employees providing services under this Contract, are in full compliance with those statutes, regulations and ordinances. Upon City request, the Consultant shall provide to the City a copy of the Consultant's licenses, certifications, registrations, etc.

2.3. **Activities, Work, and Services Performed in Department of Education Facilities, on School Grounds, at Student Sporting Events, and/or where City Students Present.** For all activities in school facilities and/or Department of Education facilities, the Consultant shall first be required to coordinate all on-site visits and activities with the appropriate Department/personnel in Education, or the designated person and shall obtain any necessary clearance, ID badges, etc. Consultant shall enter and exit all school facilities and Department of Educational facilities as designated as authorized by the appropriate Department/personnel in Education, or the designated person.

2.4. **Criminal Background Check and DCF Registry Check.** The Consultant shall comply with the requirements of C.G.S. 10-222 c (g) and shall ensure, and represents to the City, that any employee who will be on school grounds/Department of Education Property/at Department of Education events and/or where City Students Present, that will or may have direct contact with Students while providing services pursuant to this Agreement has stated, in writing, whether such person has ever been convicted of a crime or whether criminal charges were ever pending against such person. The Consultant shall further ensure, and represents to the City that any person who will have direct contact with a Student has submitted to a records check of the Department of Children and Families child abuse and neglect registry established pursuant to Conn. Gen. Stat. §17a-101k, as well as state and national criminal history records checks conducted in accordance with Conn. Gen. Stat. §29-17a, the federal National Child Protection Act of 1993, and the federal Volunteers for Children Act of 1998. The Consultant shall not permit any person with a disqualifying criminal history to have direct contact with a student. The Consultant agrees the "direct contact" shall include the Consultant and its employees providing services under this contract if said services are performed on school grounds/Department of Education Property/at Department of Education events and/or where City students are present.

2.5. **Activities, Work, and Services Performed on other City Property (Non-Education facilities).** For all activities involving non-Board of Education facilities and/or buildings, Consultant shall first be required to coordinate all on-site visits and activities with the appropriate City Department or its designee.

3. **Responsibilities of the Consultant.** All data, information, etc. given by the City to the Consultant and/or created by the Consultant shall be treated by the Consultant as proprietary to the City and confidential unless the City agrees in writing to the contrary and shall be used solely for the purposes of providing services under this Contract. The Consultant agrees to forever hold in confidence all files, records, documents and other information which may come into the Consultant's possession during the term of this Contract, except where a disclosure is expressly stated as a requirement of this Contract. Notwithstanding the foregoing, where a Consultant disclosure is required to comply with statute, regulation, or court order, the Consultant shall provide

prior advance written notice to the City of the need for such disclosure. The Consultant agrees to properly implement the services required in the manner provided.

3.1. **Use of City Property.** To the extent the Consultant is required to be on City property to render its services hereunder, the Consultant shall have access to such areas of City property as the City and the Consultant agree are necessary for the performance of the Consultant's services under this Contract (the "Site" or the "Premises") and at such times as the City and the Consultant may mutually agree. Consultant shall perform all work in full compliance with Local, State and Federal health and safety regulations. All work hereunder shall be performed in a safe manner. Consultant shall immediately correct any dangerous conditions caused by or resulting from its work. If it fails to correct, or to act diligently to correct any condition which City reasonably believes to be a hazard to persons or property, then immediately upon oral or written notice to any supervisory or similar personnel of Consultant, City may, but shall not be required to, correct same at Consultant's expense. The City shall confirm in writing any oral notice given within five (5) business days thereafter.

3.2. **Working Hours.** To the extent the Consultant is required to be on City property to render its services hereunder, the Consultant shall coordinate its schedule so that work on the Premises is performed during those hours the City sets forth in a written notice to the Consultant, unless written permission is obtained from the City to work during other times. This condition shall not excuse Consultant from timely performance under the Contract. The work schedule must be agreed upon by the City and the Consultant.

3.3. **Cleaning Up.** To the extent the Consultant is required to be on City property to render its services hereunder, the Consultant shall at all times keep the Premises free from accumulation of waste materials or rubbish caused by Consultant, its employees or subcontractors, and at the completion of the work shall remove all rubbish from and about the Project and all tools, scaffolding and surplus materials and shall leave the Premises "broom clean" or its equivalent, unless more exactly specified. In case of dispute, the City may remove the rubbish and charge the cost to the Consultant.

3.4. **Publicity.** Consultant agrees not to deliberately disclose the fact that the City has entered into or terminated this Contract or disclose any of the terms of the Contract or use the City's name in connection with any publicity unless the City gives prior written consent to such use of the City's name in each instance.

3.5. **Standard of Performance.** All workmanship, services, materials or equipment, either at the Premises or intended for it, shall conform in all respects with the requirements of all this Contract, and shall be the best obtainable from the crafts and trades. In all cases, the services, materials, equipment, reports, plans, specifications, deliverables, workmanship, etc. shall be equal to or better than the grade specified, and the best of their kind that is obtainable for the purpose for which they are intended. The standard of care and skill for all services performed by the Consultant shall be that standard of care and skill ordinarily used by other members of the Consultant's profession practicing under the same or similar conditions at the same time and in the same locality. The Consultant's services

rendered hereunder shall be rendered completely and by qualified personnel in accordance with standard industry practice.

3.6. Consultant's Employees. The Consultant shall at all times enforce strict discipline and good order among its employees and shall not employ any unfit person or anyone not skilled in the work assigned.

3.7. Due Diligence Obligation. The Consultant acknowledges its responsibility to examine and to be thoroughly familiar with the City's proposal document, including, but not limited to the specifications, and any addenda thereto. The Consultant hereby warrants and represents that prior to the submission of its proposal during the proposal process it reviewed or was afforded opportunity, by the City, to review all physical items, facilities, services or functions essential to the satisfactory performance of the services required ("Due Diligence") and thereby certifies that all such items, facilities, services or functions are included in this Contract and thereby warrants that:

3.7.1 It conducted or had opportunity to conduct all Due Diligence prior to the submission of its proposal and, accordingly, any additional costs, services or products resulting from the failure of the Consultant to complete Due Diligence prior to submission of its proposal shall be borne by the Consultant. Furthermore, the Consultant had the opportunity during the proposal process to ask questions it saw fit and to review the responses from the City;

3.7.2 Its failure or omission to make investigation and verification of data shall, in no way, be cause for future claim of ignorance of such data or conditions nor shall such failure to investigate and verify be the basis for any claim whatsoever, monetary or otherwise;

3.7.3 It is solely responsible for resolving any issues resulting from the failure to conduct Due Diligence and shall assume any costs that may result during the implementation of the Project, including, but not limited to, adherence to specifications and pricing for the Project.

3.7.4 It was responsible for specifying any changes and disclosing any new costs prior to the submittal of its proposal. Thus, in the event any changes or costs are disclosed by the Consultant, or otherwise required, during the performance of its services, the sole responsibility for any modification, delay and cost of such changes shall reside with the Consultant.

3.7.5 It has familiarized itself with the nature and extent of the Contract Documents, Work, locality, and with all local conditions and Federal, State and Local laws, ordinances, rules and regulations that in any manner may affect cost, progress or performance of the Work;

3.7.6 It has given the City written notice of any conflict, error or discrepancy that

the Consultant has discovered in the Proposal Documents; and

3.7.7 It agrees that the Proposal Documents are sufficient in scope and detail to indicate and convey understanding of all terms and conditions for performance of the Work.

3.8. Reporting Requirement. [NOT APPLICABLE] The Consultant shall deliver periodic written reports to the City's Using Agency setting forth **(i)** the issue date of the report, **(ii)** the time period covered by the report, **(iii)** a brief description of the work and services completed by the Consultant and/or delivered by the Consultant during the time period covered by the report,
(iv) expressed as a percentage of the total work and services required under this Contract, the percentage of the total work represented by the work and services described in subsection iii above, **(v)** expressed as a percentage of this Contract's **Section 6** total compensation, the percentage of the total compensation represented by the work and services described in subsection iii above, **(vi)** the Consultant's declaration as to whether the entirety of the Consultant's work and services required in this Contract will be, or will not be, completed within the Contract's **Section 6** total compensation amount, and **(vii)** any and all additional useful and/or relevant information. Each report shall be signed by the Consultant's Principal or a specifically authorized individual.

NOTE: the Consultant's failure to deliver any report required herein shall be deemed a material breach of this Contract, the City hereby reserving the right to exercise all available legal remedies to address said breach.

4. Responsibilities of the City. Upon the City's receipt of Consultant's written request, the City will provide the Consultant with all documents, data and other materials the City agrees are necessary and appropriate to the service to be performed by the Consultant hereunder and the City will endeavor to secure, where feasible and where the City agrees it is necessary and appropriate, materials or information from other sources requested by the Consultant for the purpose of carrying out the services under this Contract.

5. Contract Time. The Consultant shall complete all work and services required under this Contract within six (6) months from the date of the Mayor's execution of this Contract.

5.1 Time is and shall be of the essence for all Project milestones and the completion date for the Project. The Consultant further agrees that the Work shall be prosecuted regularly, diligently, and uninterruptedly and at such rate of progress as will ensure full completion thereof within the Contract time stated above. It is expressly understood and agreed by and between the Consultant and City that the Contract Time is reasonable for the completion of the Work. The Consultant shall be subject to City imposed fines and/or penalties in the event the Consultant breaches the foregoing dates.

5.2. Delay Damages.

5.2.1 Time is and shall be of the essence for all Project milestones and the completion date for the Project. The Consultant further agrees that the Work shall be prosecuted regularly, diligently, and uninterruptedly and at such rate of progress as will ensure full completion thereof within the Contract time stated above. It is expressly understood and agreed by and between the Consultant and City that the Contract Time is reasonable for the completion of the Work.

5.2.2 The Consultant shall pay to the City the sum of the greater of **SEVEN HUNDRED FIFTY DOLLARS AND ZERO CENTS ($750.00)** per calendar day for each and every calendar day for which the Consultant is in default in completing the work beyond the Milestones Dates, as set forth in **Section 5.1**, or the actual damages incurred by the City caused by the delay. The preceding sum is hereby agreed upon not as a penalty, but as delay damages for the delay that the City shall suffer due to such default.

5.2.3 The City shall have the right to recover all damages pursuant to any remedy at law or equity including but not limited to deducting the amount of any such damages from any monies due the Consultant under this Contract. The Consultant understands that if the entire Work or of any portion of the Work that the City has agreed to accept separately, if any, is not attained by the applicable completion dates as set forth in the entire **Section 5**, the City will suffer damages, which are difficult to specify accurately and ascertain. Delay damages based upon delay shall be assessed to compensate the City for all actual loss sustained by the delay, including, but not limited to, loss of use, increased cost of material or services to complete the project, loss of State funding, all other another actual expense, and all other damages allowed by law, including attorney's fees.

5.3.4. No Damage for Delay. In no event shall the Consultant be entitled to any compensation or recovery of any damages in connection with any delay, including, without limitation, consequential damages, lost opportunity damages, attorney's fees or other similar remuneration. The City's exercise of any of its rights or remedies under the Contract Documents, including without limitation, ordering changes in the Work, or directing suspension, rescheduling or correction of the Work, regardless of the extent or frequency of the City's exercise of these rights has been contemplated by the Parties and shall not be construed as an exception.

6. Compensation. The City shall compensate the Consultant for the satisfactory provision of all of the goods and services set forth in this Contract as follows in this **Section 6**.

6.1. Fee Schedule. The fee payable to the Consultant shall not exceed **THREE HUNDRED FORTY-SIX THOUSAND THREE HUNDRED FOUR AND 25/100 DOLLARS (346,304.25)** (hereafter referred to as "Total Compensation") with the basis for

payment being the Consultant's Quote as set forth in **Attachment A**.

6.2. Limitation of Payment. Compensation payable to the Consultant is limited to those fees set forth in **Section 6.1**, above. Such compensation shall be paid by the City upon review and approval of the Consultant's invoices for payment and review of the work, services, deliverables, etc. required in this Contract and review as may be further required by the Charter and Ordinances of the City. Consultant's invoices shall describe the work, services, reports, plans, specifications, deliverables, etc. rendered and the compensation sought therefore in a form and with detail and clarity acceptable to the City.

6.2.1 The Consultant and its affiliates are hereby provided with notice that the City reserves the right, in the City's sole discretion, to offset, withhold, or otherwise reduce City payment(s) to the Consultant in an amount equaling the sum or sums of money the Consultant and/or its affiliates is/are, or becomes delinquent or in arrears on, regarding the Consultant's and/or its affiliate's real and personal tax obligations to the City.

6.3. Review of Work. The Consultant shall permit the City to review, at any time, all work performed under the terms of this Contract at any stage of the work. The Consultant shall maintain or cause to be maintained all records, books or other documents relative to charges, costs, expenses, fees, alleged breaches of the Contract, settlement of claims or any other matter pertaining to the Consultant's demand for payment. The City shall not certify fees for payment to the Consultant until the City has determined that the Consultant has completed the work in accordance with the requirements of this Contract.

6.4. Quote Costs. All costs of the Consultant in preparing its quote shall be solely borne by the Consultant and are not included in the compensation to be paid by the City to the Consultant under this Contract or any other Contract.

6.5. Payment for Services, Materials, Employees. The Consultant shall be fully and solely responsible for the suitability, and compliance with the Contract, of all labor, services, equipment, materials, reports, plans, specifications, deliverables, incidentals, etc. furnished to the City under this Contract. The Consultant shall promptly pay all employees as their pay falls due, shall pay promptly as they fall due all bills for labor, services, equipment, materials, reports, plans, specifications, deliverables, incidentals, etc., going into the work, and all bills for insurance, bonds, Worker's Compensation coverage, Federal and State Unemployment Compensation, and Social Security charges applicable to this Project. Before final payment is made, the Consultant shall furnish a legal statement to the City that all payments required under this subparagraph have been made. Additionally, during the Project, at the City's option, it may require partial waivers of lien and claim from the Consultant and all subcontractors and materialmen with each payment application.

6.6. Liens. Neither the final payment nor any part of the retained percentage, if any, shall become due until the Consultant, if requested by the City, shall deliver to the City a complete

release of all liens arising out of this Contract, or receipts in full in lieu thereof, and, if required, in either case, an affidavit that so far as the Consultant has knowledge or information, the releases and receipts include all the labor and material for which a lien could be filed; but the Consultant may, if any subcontractor refuses to furnish a release or receipt in full, furnish a bond satisfactory to the City, to indemnify it against any lien. If any lien remains unsatisfied after all payments are made, the Consultant shall refund to the City all moneys that the City may be compelled to pay in discharging such a lien, including all costs and a reasonable attorney's fee.

7. **Passing of Title and Risk of Loss.** Title to each item of equipment, material, reports, plans, specifications, supplies, services, etc. required to be delivered to the City hereunder shall pass to City upon City payment to the Consultant for that item. Consultant and its insurer shall assume the risk of loss or damage up to and including the date title passes, except that City shall be responsible for loss or damage caused by City's negligence.

8. **Indemnification.**

8.1. The Consultant shall indemnify, defend, and hold harmless the City, City's Boards, and Board of Education, commissions, agents, officials and employees from and against all claims, suits, damages, losses, judgments, costs and expenses including attorney's fees arising out of or resulting from the delivery of the labor, services, equipment, materials, reports, plans, specifications, design, drawings, deliverables, incidentals, etc. provided that any such claims, suits, damages, losses, judgments, costs or expenses **(i)** are attributable to bodily injury, sickness, disease or death, or to injury to or destruction of tangible property, including the loss of use resulting there from, **(ii)** are alleged to be caused in whole or in part by any willful, intentional, negligent, or reckless act or omission of the Consultant, its employees, any subcontractor or consultant, anyone directly or indirectly employed by any of them or anyone for whose acts any of them may be liable, regardless of whether or not it is caused in part by a party indemnified hereunder; **(iii)** enforcement action or any claim for breach of the Consultant duties hereunder or **(iv)** claim for intangible loss(es) including but not limited to business losses, lost profits or revenue, regardless of whether or not it is caused in part by a party indemnified hereunder.

8.2. In any and all claims against the City or any of its boards, agents, employees or officers by the Consultant or any employee of the Consultant, any subcontractor, anyone directly or indirectly employed by any of them or anyone for whose acts any of them may be liable, the indemnification obligation under Paragraph 8.1, above, shall not be limited in any way by any limitation on the amount or type of damages, compensation or benefits payable by or for the Consultant or any subcontractor under Worker's Compensation Acts, disability benefit acts or other employee benefit acts.

8.3. The Consultant understands and agrees that any insurance required by this Contract, or otherwise provided by the Consultant, shall in no way limit the responsibility to indemnify, defend, keep and hold harmless the City as provided in this Contract.

8.4. The Consultant expressly understands and agrees that any performance bond or insurance protection required by this Contract, or otherwise provided by the Consultant, shall in no way limit the responsibility to indemnify, keep and save harmless and defend the City and the City's boards, agents, employees or officers as provided herein.

8.5. Royalties and Patents. The Consultant shall, for all time, secure to the City the free and undisputed right to the use of any and all patented articles and methods used in the work and shall defend at Consultant's own expense any and all suits for infringement or alleged infringement of such patents, and in the event of adverse award under patent suits, the Consultant shall pay such awards and hold the City harmless in connection with any patent suits that may arise as a result of installations made by the Consultant and as to any award made thereunder.

8.6. In the event this Contract and/or the Consultant's, or its subcontractor, work and services provisioned hereunder is/are subject to the provisions of any Federal or State statute or regulations, or the City Charter or City Ordinance, the Consultant shall indemnify, defend and hold harmless the City from any fine, penalty or other amounts imposed on the City under said statutes, regulations, Charter or Ordinances, if caused by Consultant, or its subcontractor, omission or commission.

9. Consultant's Insurance.

9.1. The Consultant shall not commence work under this Contract until all insurance required under this **Section 9** has been obtained by the Consultant and such insurance has been approved by the City. The Consultant shall not allow any subcontractor to commence work on any subcontract until all insurance required of any such subcontractor has been so obtained and approved by the City. Insurance shall be provided by insurers that are satisfactory to the City, authorized to do business in the State of Connecticut, that have at least an "A-" Best's Rating, and are in an A.M. Best financial size category of VII or higher. The A.M. Best classifications are based on the most current A.M. Best Company ratings or an equivalent City approved rating system.

9.2. At no additional cost to the City, the Consultant shall purchase and maintain the insurance coverages set forth below which shall protect the City from claims which may arise out of or result from the Consultant's obligation under this Contract, whether such obligations are the Consultant's or subcontractor, or person or entity directly or indirectly employed by said Consultant or subcontractor, or by any person or entity for whose acts said Consultant or subcontractor may be liable.

9.3. Each insurance policy shall state that the insurance company shall agree to investigate and defend the insured against all claims for damages, even if groundless. If any insurance required herein is to be issued or renewed on a claims made form as opposed to an occurrence form, the retroactive date for coverage shall be no later than the commencement date of this Contract and shall provide that in the event of cancellation or non-renewal, the discovery period for insurance claims ("Tail Coverage") shall be available for at least 60

months.

9.4. The following policies with stated limits shall be maintained, in full force and effect, at all times during which the services are to be performed by the Consultant:

9.4.1 General Liability Insurance:
$ 1,000,000.00 Per Occurrence
$ 2,000,000.00 General Aggregate
$ 2,000,000.00 Products/Completed Operations Aggregate

Providing coverage to protect the City for all damages arising out of bodily injuries, sickness to or death of all persons in any one accident or occurrence and for all damages arising out of destruction of property in any one accident or occurrence.

9.4.2 Automobile Liability Insurance:
$ 1,000,000.00 Combined single limit ("CSL")

Providing coverage to protect the City with respect to claims for damage for bodily injury and or property damage arising out of ownership, maintenance, operation, use or loading and unloading of any auto including hired & non-owned autos.

9.4.3 Workers' Compensation: Statutory Limits within the State of Connecticut. Employers' Liability ("EL"):
$ 1,000,000.00 EL Each Accident
$ 1,000,000.00 EL Disease Each Employee
$ 1,000,000.00 EL Disease Policy Limit

Consultant shall comply with all State of Connecticut statutes as it relates to Workers' Compensation.

9.4.4 Excess/Umbrella Liability:
$ 1,000,000.00 Per Occurrence
$ 1,000,000.00 Aggregate

9.5. Failure to Maintain Insurance. In the event the Consultant fails to maintain the minimum required coverage as set forth herein, the City may at its option purchase same and offset the Consultant's invoices for the cost of said insurance.

9.6. Cancellation. The City of Waterbury shall receive written notice of cancellation from the Consultant at least thirty (30) calendar days prior to the date of actual cancellation, regardless of the reason for such cancellation.

9.7. Certificates of Insurance. The Consultant's General, Automobile and Excess/Umbrella Liability Insurance policies shall be endorsed to add the City and The

Board of Education as an additional insured and provide a waiver of subrogation on all lines of coverage except Professional Liability. The insurance afforded the additional insured shall be primary and non-contributory insurance and the coverage and limits provided under the Consultant's policies shall not be reduced or prorated by the existence of any other insurance applicable to any loss the additional insured may have suffered. At the time the Consultant executes this Contract, it shall furnish to the City, subject to City approval, certificate(s) of insurance and Additional Insured Endorsement and Waiver of Subrogation Endorsement verifying the above coverages, including the naming of the City of Waterbury, as follows: **"The City of Waterbury and its Board of Education is listed as Additional Insured on a primary and non-contributory basis on all policies except Workers Compensation. All policies shall include a Waiver of Subrogation except Professional Liability."** The City's request for proposal number or project name must be shown on the certificate of insurance. The Consultant must supply replacement/renewal certificates at least thirty (30) calendar days prior to the expiration of the policy(ies). Said certificates shall contain a provision that coverage afforded under the policies shall not be cancelled or reduced for any reasons unless notice of not less than thirty (30) calendar days has been mailed to the Office of the Corporation Counsel, 235 Grand Street, Waterbury, CT06702.

9.8. No later than thirty (30) calendar days after Consultant receipt, the Consultant shall deliver to the City a copy of the Consultant's insurance policies, endorsements, and riders.

10. Conformance with Federal, State and Other Jurisdictional Requirements. By executing this Contract, the Consultant represents and warrants that, at all pertinent and relevant times to the Contract, it has been, is and will continue to be in full compliance with all applicable statutes, acts, ordinances, guidelines, resolutions, orders, judgments, decrees, injunctions, rules, and regulations of all government authorities applicable to performance by the Consultant of services hereunder, including those having jurisdiction over its registration and licensing to perform services hereunder; including, but not limited to, the following: **EQUAL EMPLOYMENT OPPORTUNITY ACT; COPELAND ANTI-KICKBACK ACT**, as supplementedin the Department of Labor Regulations (29 **CFR** Part 3); **DAVIS-BACON ACT** as supplemented by Department of Labor Regulations (29 CFR Part 5); Section 103 and 107 of the Contract Work Hours and Safety Standards Act, as supplemented by the Department of Labor Regulations (29 CFR Part 5); **THE HOUSING AND COMMUNITY DEVELOPMENT ACT OF 1974**, as amended; **TITLE 31** and Section 12-430(7) of the State of Connecticut General Statutes. All applicable sections of the City Charter and Code of Ordinances are incorporated by reference and made a part hereof.

10.1. Permits, Laws, and Regulations. Permits and licenses necessary for the delivery and completion of the Consultant's work and services shall be secured in advance and paid for by the Consultant. The Consultant shall give all notices and comply with all laws, ordinances, rules and regulations relating to the conduct of the work and services as specified.

10.2. Taxes-Federal, State and Local. The City is exempt from Federal Excise and Transportation, State and Local Sales and Use Taxes, including without limitation, taxes

that would otherwise be imposed upon the Consultant for transactions required or necessitated hereunder between it and its subcontractors, suppliers, etc. The Consultant remains liable, however, for any applicable tax obligations it incurs. Moreover, the Consultant represents that the proposal and pricing contained in this Contract do not include the amount payable for said taxes.

10.3. Labor and Wages. The Consultant and its subcontractors shall conform to the labor laws of the State of Connecticut, and all other laws, ordinances, and legal requirements affecting the work in Connecticut.

10.3.1 The Consultant is aware of the provisions of Title 31, § 53 of the Connecticut General Statutes, latest revision (the "Act"), concerning the payment of minimum wages and other payments or contributions established by the State of Connecticut Labor Commissioner for work on public facilities. The provisions of the Act are incorporated by reference and made a part of this Contract. The Act provides that the Connecticut prevailing wage law applies to certain remodeling, refurbishing, alteration, repair and new construction. The wages paid on an hourly basis to any person performing the work of any mechanic, laborer or worker on the work herein contracted to be done and the amount of payment or contribution paid or payable on behalf of each such person to any employee welfare fund, as defined in Conn. Gen. Statute § 31-53(i), shall be at a rate equal to the rate customary or prevailing for the same work in the same trade or occupation in the town in which such public works project is being constructed. Any contractor who is not obligated by agreement to make payment or contribution on behalf of such persons to any such employee welfare fund shall pay to each mechanic, laborer or worker as part of such person's wages the amount of payment or contribution for such person's classification on each pay day.

10.3.2 The Consultant is aware of, and shall comply with, the provisions of both the Federal Davis-Bacon Act and the Federal American Recovery and Reinvestment Act of 2009, the provisions of both acts hereby incorporated by reference and made a part of this Contract. The Federal Davis-Bacon Act provides that Federal wage rate laws apply to certain federally funded contracts. The American Recovery and Reinvestment Act ("**ARRA**") provides that Federal wage rate laws apply to all **ARRA** funded contracts regardless of the contract's dollar value.

11. Discriminatory Practices. In performing this Contract, the Consultant shall not discriminate against any employee or applicant for employment, with respect to his or her hire, tenure, terms, conditions or privileges of employment, or any matter directly or indirectly related to employment, because of race, color, sex, gender identity or expression, age, religious creed, disability, national origin or ancestry, marital status, family status, prior psychiatric treatment, health care, military status or source of income or because of a handicap that is unrelated to the employee's or the applicant's ability to perform the duties of a particular job or position. Subcontracts with each subcontractor shall contain a provision requiring non-discrimination in

employment as herein specified. This covenant is required pursuant to § 93.04 of the Code of Ordinances of the City and any breach thereof may be regarded as a material breach of this Contract. Said provisions with subcontractors shall require conformity and compliance with all Local, State and Federal laws, rules and regulations and Executive orders pertaining to discrimination and equal opportunity requirements.

11.1. Discrimination Because of Certain Labor Matters. No person employed on the work covered by this Contract shall be discharged or in any way discriminated against because such person has filed any complaint or instituted or caused to be instituted any proceeding or has testified or is about to testify in any proceeding under or related to the labor standards applicable hereunder to its employer.

11.2. Equal Opportunity. In its execution of the performance of this Contract, the Consultant shall not discriminate and shall comply with applicable laws prohibiting discrimination on the grounds of race, color, religion, sex, gender identity or expression, national origin or citizenship status, age or handicap. The Consultant agrees to comply with all Local, State and Federal laws, rules and regulations and Executive orders pertaining to discrimination and equal opportunity requirements and will require the same of all subcontractors.

12. Intentionally Omitted.

13. Termination.

13.1. Termination of Contract for Cause. If, through any cause, in part or in full, the fault of the Consultant, the Consultant shall fail to fulfill in a timely and proper manner its obligations under this Contract, or if the Consultant shall violate any of the covenants, agreements, or stipulations of this Contract, the City shall thereupon have the right to terminate this Contract by giving written notice to the Consultant of such termination and specifying the effective date thereof, at least five (5) business days before the effective date of such termination. Notwithstanding the above, upon determination by a court of competent jurisdiction that the termination of the agreement pursuant to this **Section 13.1** was wrongful, such termination will be deemed converted to a termination for convenience pursuant to **Section 13.2** and the Consultant's remedy for wrongful termination shall be limited to the recovery of the payments permitted for termination for convenience pursuant to **Section 13.2**.

13.1.1 In the event of such termination, all finished or unfinished documents, data, studies, reports, specifications, deliverables, etc. prepared by the Consultant under this Contract shall, at the option of the City, become the City's property, and the Consultant shall be entitled to receive just and equitable compensation for any satisfactory work completed for such.

13.1.2 Notwithstanding the above, the Consultant shall not be relieved of liability to the City for damages sustained by the City by virtue of any breach of this Contract

by the Consultant, and the City may withhold any payments to the Consultant for the purpose of setoff until such time as the exact amount of damages due the City from the Consultant is determined.

13.2. Termination for Convenience of the City. The City may terminate this Contract at any time for the convenience of the City, by a notice in writing from the City to the Consultant. If this Contract is terminated by the City as provided herein, the Consultant will be paid an amount which bears the same ratio to the total compensation as the services actually performed bear to the total services of the Consultant covered by this Contract, less payments of compensation previously made.

13.3. Termination for Non-Appropriation or Lack of Funding. The Consultant acknowledges that the City is a municipal corporation and that this Contract is subject to the appropriation of funds by the City sufficient for this Contract for each budget year in which this Contract is in effect. The Consultant therefore agrees that the City shall have the right to terminate this Contract in whole or in part without penalty in the event sufficient funds to provide for City payment(s) under this Contract is not appropriated, not authorized or not made available pursuant to law, or such funding has been reduced pursuant to law.

13.3.1 Effects of Non-Appropriation. If funds to enable the City to effect continued payment under this Contract are not appropriated, authorized or otherwise made available by law, the City shall have the right to terminate this Contract without penalty at the end of the last period for which funds have been appropriated, authorized or otherwise made available by law by giving written notice of termination to the Consultant.

13.3.2 Effects of Reduced Levels of Funding. If funding is reduced by law, or funds to pay the Consultant for the agreed to level of the products, services and functions to be provided by the Consultant under this Contract are not appropriated, authorized or otherwise made available by law, the City may, upon seven (7) calendar days written notice to the Consultant, reduce the level of the products, services or functions in such manner and for such periods of time as the City may elect. The charges payable under this Contract shall be equitably adjusted to reflect such reduced level of products, services or functions and the parties shall be afforded the rights set forth in this Contract.

13.3.3 No Payment for Lost Profits. In no event shall the City be obligated to pay or otherwise compensate the Consultant for any lost or expected future profits.

13.4. Rights Upon Cancellation or Termination.

13.4.1 Termination for Cause. In the event the City terminates this Contract for cause, the Consultant shall relinquish to the City any applicable interest, title and ownership including, but not limited to, perpetual use of any proprietary rights in

and to the documents, data, studies, reports, specifications, deliverables, etc. provided to, in possession of, and properly invoiced and paid for by (except to the extent such invoiced amount is disputed) the City. With regard to third party products, the Consultant shall transfer all licenses to the City which the Consultant is permitted to transfer in accordance with the applicable third-party license. The City shall have no financial obligation to compensate the Consultant for such terminated documents, data, studies, reports, specifications, deliverables, etc. unless payment is otherwise approved by the City prior to such termination. The Consultant shall be liable for costs incurred by the City, including but not limited to reasonable attorney fees and all court awarded fees and costs incurred in terminating this agreement in whole or in part.

13.4.2 Termination for Lack of Funding or Convenience. In the event of termination of this Contract by the City for lack of funding or convenience, the City shall pay the Consultant for all documents, data, studies, reports, specifications, deliverables, etc. (including any holdbacks), installed and delivered to the City as of the Termination Date and the Consultant shall relinquish to the City any applicable interest, title and ownership including, but not limited to perpetual use of any proprietary rights in and to said documents, data, studies, reports, specifications, deliverables, etc. in possession of and paid for by the City (except to the extent any invoiced amount is disputed). The Consultant shall be required to exercise commercially reasonable efforts to mitigate damages. In the event of a termination for Lack of Funding or Convenience the City and the Consultant may negotiate a mutually acceptable payment to the Consultant for reasonable demobilization expenses. Said demobilization expenses, if any, shall be handled in accordance with the provision of this Contract pertaining to Changes in the Work.

13.4.3 Termination by the Consultant. The Consultant may, by written notice to the City, terminate this Contract if the City materially breaches, provided that the Consultant shall give the City thirty (30) calendar days prior written notice and an opportunity to cure by the end of said thirty (30) day period. In the event of such termination, the Consultant will be compensated by the City for work performed prior to such termination date and the Consultant shall deliver to the City all deliverables as otherwise set forth in this Contract.

13.4.4 Assumption of Subcontracts. In the event of termination of this Contract, the City shall have the right to assume, at its option, any and all subcontracts for products, services and functions provided exclusively under this Contract and may further pursue completion of the work under this Contract by replacement contract or otherwise as the City may in its sole judgment deem expedient.

13.4.5 Delivery of Documents. In the event of termination of this Contract, **(i)** the Consultant shall promptly deliver to the City, in a manner reasonably specified by the City, all labor, services, equipment, materials, reports, plans, specifications, deliverables, incidentals, etc. and other tangible items furnished by, or owned,

leased, or licensed by, the City, and **(ii)** the City shall pay the Consultant for all services performed and deliverables completed and accepted (pro-rated for deliverables partially completed) prior to the effective date of the termination (except to the extent any invoice amount is disputed).

14. Ownership of Instruments of Professional Services. The City acknowledges the Consultant's documents, data, studies, reports, specifications, deliverables, etc. created pursuant to this Contract, including electronic files, are Instruments of Professional Services. Nevertheless, the final Instruments of Professional Services, including, but not limited to documents, data, studies, reports, specifications, deliverables, etc. prepared for the City under this Contract shall become the property of the City upon City payment for that Instrument of Professional Services and the City reserves the right to use the Instruments of Professional Services.

15. Force Majeure. Neither the Consultant nor the City shall be held responsible for delays or be considered to be in breach of this Contract or be subject to liquidated damages when their respective obligations under this Contract are caused by conditions beyond their control, including without limitation:

15.1. Acts of God, such as severe acts of nature or weather events including floods, fires, earthquakes, hurricanes, cyclones, or explosions;

15.2. War, acts of terrorism, acts of public enemies, revolution, civil commotion or unrest, riots, pandemics or epidemics;

15.3. Acts of governmental authorities such as expropriation, condemnation, changes of law and order or regulations, proclamation, ordinance, or another governmental requirement;

15.4. Strikes and labor disputes; and

15.5. Certain accidents including but not limited to hazardous, toxic, radioactive or nuclear contamination spills, contamination, combustion or explosion, which prevent a Party from fulfilling their obligations or otherwise render performance under the Contract impossible.

Upon cessation of work for reason of force majeure delays, the Party(ies) whose obligations are affected shall use their best efforts to meet their obligations under this Agreement.

16. Subcontracting. The Consultant shall not, without the prior written approval of the City, subcontract, in whole or in part, any of the Consultant's services. Any subcontractor so approved shall be required to secure and maintain insurance coverage equal to or better than that required of the Consultant and shall name the City as an additional insured party and said subcontractors shall deliver to the City a certificate of insurance evidencing such coverages. All subcontractors shall comply with all Federal, State and Local laws, regulations and ordinances but such requirement

shall not relieve the Consultant from its requirement that all work and services provided or required hereunder shall comply with all Federal, State and local laws, regulations and ordinances.

16.1. The Consultant shall be fully responsible to the City for the acts and omissions of the Consultant's subcontractors, and of people either directly or indirectly employed by them, as it is for the acts and omissions of people directly employed by the Consultant.

17. Assignability. The Consultant shall not assign any interest in this Contract, and shall not transfer any interest in the same (whether by assignment or novation) without the prior written approval of the City; provided, however, that claims for money due or to become due the Consultant from the City under this Contract may be assigned to a bank, trust, company, or other financial institution, or to a Trustee in Bankruptcy, without such approval. Notice of any such assignment or transfer shall be furnished promptly to the City.

18. Audit. The City reserves the right to audit the Consultant's books ofaccount in relation to this Contract at any time during the period of this Contract or at any time during the twelve-month period immediately following the closing or termination of this Contract. In the event the City elects to make such an audit, the Consultant shall immediately make available to the City all records pertaining to this Contract, including, but not limited to, payroll records, bank statements and canceled checks.

19. Risk of Damage and Loss. The Consultant shall be solely responsible for causing the timely repair to and/or replacement of City property or item(s) intended to become City property hereunder, where the need for repair or replacement was caused by the Consultant, by someone under the care and/or control of the Consultant, by any subcontractor of the Consultant, or by any shipper or delivery service. The Consultant shall be solely responsible for all costs and expenses, including but not limited to shipping, delivery, insurance, etc. associated with the foregoing repair and replacement obligation. Further, the Consultant shall be solely responsible for securing the City's written acceptance of all completed repairs and replacements required hereunder. The City hereby retains sole discretion to determine whether a repair or a replacement is the proper remedy.

20. Interest of Consultant. The Consultant covenants that it presently has no interest and shall not acquire any interest, direct or indirect, in the project or any parcel of land therein or any other interest which would conflict in any manner or degree with the performance of its services hereunder. The Consultant further covenants that in the performance of this Contract no person having any such interest shall be employed.

21. Entire Agreement. This Contract shall constitute the complete and exclusive statement of the Contract between the parties as it relates to this transaction and supersedes all previous agreements and understandings, whether written or oral, relating to such subject matter. Any amendment to this Contract must be in writing and agreed to and executed by the City and the Consultant.

22. Independent Contractor Relationship. The relationship between the City and the Consultant is that of client and independent contractor. No agent, employee, or servant of the

Consultant shall be deemed to be an employee, agent or servant of the City. The Consultant shall be solely and entirely responsible for its acts and the acts of its agents, employees, servants and subcontractors during the performance of this Contract. It is the express intention of the parties hereto, and the Consultant hereby agrees and covenants, that it and any and all third party(ies) and subcontractor(s) retained by the Consultant hereunder is/are not and shall not be deemed an employee of the City of Waterbury, but is/are and shall remain an independent contractor relative to the City and that nothing herein shall be interpreted or construed as creating or establishing the relationship of employer-employee between the City of Waterbury and the Consultant or between the City of Waterbury and any third party(ies) or subcontractor(s). Thus, the Consultant hereby covenants that it, its subcontractor(s) and third party(ies) shall not be entitled to the usual characteristics of employment, such as income tax withholding, F.I.C.A. deductions, pension or retirement privileges, Workers Compensation coverage, health benefits, etc. and that the Consultant shall be solely and entirely responsible for its acts and the acts of its agents, employees, servants, representatives, subcontractors and third party(ies).

23. Severability. Whenever possible, each provision of this Contract shall be interpreted in such a manner as to be effective and valid under applicable law. If any provision of this Contract, however, is held to be prohibited or invalid under applicable law, such provision shall be deemed restated to reflect the original intentions of the parties, as nearly as possible in accordance with applicable law, and if capable of substantial performance, the remaining provisions of this Contract shall be enforced as if this Contract was entered into without an invalid provision. If the ruling and/or controlling principle of law or equity leading to the ruling is subsequently overruled, modified or amended by legislation, judicial or administrative action, then the provision(s) in question as originally set forth in this Contract shall be deemed valid and enforceable to the maximum extent permitted by the new controlling principal of law or equity.

24. Survival. Any provisions of this Contract that impose continuing obligations on the parties shall survive the expiration or termination of this Contract for any reason.

25. Contract Change Orders.

25.1. At the sole discretion of the City, a Change Order may be issued solely by the City to modify an existing party obligation set forth in this Contract where the scope of the Change Order is:

25.1.1 within the scope of the original Contract OR is made pursuant to a provision in the original Contract; and

25.1.2 the Change Order monetary cost is charged solely against those funds encumbered for and at the time the Contract was originally executed by the City, that is those funds set forth in the original Contract as a not to exceed payment amount OR within the original Contract's contingency / allowance / reserve amount (if any is stated therein); and

25.1.3 the Final Completion Date has not been changed.

25.2. Notwithstanding the foregoing **Subsection 25.1**, a Change Order shall not include:

25.2.1 an upward adjustment to a Consultant's payment claim; or

25.2.2 a payment increase under any escalation clause set forth in the original contract, or any Change Order, or any amendment.

25.3. That the work and/or services contemplated are necessary does not, in itself, permit a Change Order. Should the need for a Change Order arise, the request shall be reviewed, and if agreed to, approved by the City's Using Agency and any City designated representative(s). To be binding and enforceable, a Change Order shall thereafter be signed by both the Consultant, any City designated representative(s), and a duly authorized representative of the City's Using Agency prior to the Consultant's delivery of the services, etc. contemplated in said Change Order. All Change Orders are governed by the provisions of this Contract. Any contract changes NOT fully complying with this **Section 25** shall be effectuated solely by an amendment to this Contract complying with Section 38.073 of the City's "Centralized Procurement System" ordinance.

26. Conflicts or Disputes. This Contract represents the full and complete concurrence between the City and the Consultant and governs all disputes between them.

26.1. Procedure. This procedure supersedes all statements to the contrary occurring either in proposals or other prior agreements, oral or written, and all other communications between the parties relating to this subject.

26.2. Presumption. This Contract or any section thereof shall not be construed against any party due to the fact that the Contract or any section thereof was drafted by such party.

27. Disputes; Legal Proceedings; Waiver of Trial by Jury and Continued Performance. The Consultant agrees that it waives a trial by jury as to any and all claims, causes of action or disputes arising out of this Contract or services to be provided pursuant to this Contract. Notwithstanding any such claim, dispute or legal action, the Consultant shall continue to perform services under this Contract in a timely manner, unless otherwise directed by the City.

28. Binding Agreement. The City and the Consultant each bind themselves, and their successors, assigns and legal representatives to the other party to this Contract and to the successors, assigns and legal representatives of such other party with respect to all covenants of this Contract.

29. Waiver. Any waiver of the terms and conditions of this Contract by either of the parties hereto shall not be construed to be a waiver of any other term or condition of this Contract.

30. Governing Law and Choice of Forum. This Contract shall be construed in accordance with the terms and conditions set forth in this Agreement and the law of the State of Connecticut without regard to choice or conflict of laws principles that would cause the application of any other laws. Any dispute or controversy arising out of or relating to this Contract or otherwise shall be determined by a court of competent jurisdiction in Waterbury, Connecticut (or the Federal Court otherwise having territorial jurisdiction over such City and subject matter jurisdiction over the dispute), and not elsewhere.

31. Notice. Except as otherwise specifically prohibited in this Contract, whenever under this Contract approvals, authorizations, determinations, notices, satisfactions or waivers are required or permitted, such items shall be effective and valid only when given in writing signed by a duly authorized officer of the City's Using Agency or the Consultant, and delivered in hand or sent by mail, postage prepaid, to the party to whom it is directed, which until changed by written notice, are as follows:

Consultant:	SGNL Communications, LLC 96 Bank Street Waterbury, CT 06702
City:	Office of the Corporation Counsel Third Floor City Hall Building 235 Grand Street Waterbury, CT 06702
With a copy to:	Waterbury Board of Education 236 Grand Street Waterbury, CT 06702

32. City Code of Ordinances, Ethics and Conflict of Interest Code, Provisions. The Person (the term "Person" shall herein be as defined in Section 38 of the City's Code of Ordinances) supplying the documents, data, studies, reports, specifications, deliverables, etc. under this Contract shall comply with all applicable Federal, State and Municipal statutes, regulations, charters, ordinances, rules, etc. whether or not they are expressly stated in this Contract, including but not limited to the following:

32.1. It shall be a material breach of this Contract, and, except as may be permitted by regulations or rulings of the City of Waterbury Board of Ethics it shall be a violation of the City's Code of Ordinances, for any Public Official, City Employee or Member of a Board or Commission who is participating directly or indirectly in the procurement process as set forth in the City's Code of Ordinances, including those participating in exempt transactions, to become or be the employee of any person contracting with the governmental body by whom the Official, Employee, or Board or Commission member is employed or is a member.

32.2. It shall be a material breach of this Contract, and it shall be a violation of the City's Code of Ordinances for any Person to offer, give, or agree to give any current or former Public Official, Employee or Member of a Board or Commission, or for such current or former Public Official, Employee or Member of a Board or Commission to solicit, demand, accept or agree to accept from another Person, a gratuity or an offer of employment in connection with any: decision; approval; disapproval; recommendation; preparation of any part of a program requirement or a requisition; influencing the content of any specification or procurement standard; or rendering of advice, investigation, auditing, or in any other advisory capacity in any proceeding or application, request for ruling, determination, claim or controversy, or other particular matter, pertaining to any program requirement or a Contract or Purchase Order, or to any solicitation or proposal therefore.

32.3. It shall be a material breach of this Contract and it shall be a violation of the City's Code of Ordinances for any payment, Gratuity, or offer of employment to be made as an inducement for the award of a subcontract or order, by or on behalf of a subcontractor, the prime Consultant or higher tier subcontractor or any Person associated therewith, under a Contract or Purchase Order to the City.

32.4. The value of anything transferred or received in violation of the City's Charter, Code of Ordinances, and/or regulations promulgated there under, by any Person subject to said Charter and/or Ordinances may be recovered by the City.

32.5. Upon a showing that a subcontractor made a kickback to the City, a prime Consultant or a higher tier subcontractor in connection with the award of a subcontract or order there under, it shall be conclusively presumed that the amount thereof was included in the price of the subcontract or order and ultimately borne by the City and will be recoverable hereunder from the recipient. In addition, said value may also be recovered from the subcontractor making such kickbacks. Recovery from one offending party shall not preclude recovery from other offending parties.

32.6. It shall be a material breach of this Contract and it shall be a violation of the City's Code of Ordinances for a Person to be retained, or to retain a Person, to solicit or secure a contract with the City upon an agreement or understanding for a commission, percentage, brokerage, or contingent fee; and every Person, before being awarded a City contract, shall deliver to the City, on a City authored form, a representation that such Person has not retained anyone in violation of this subsection 32.6, the failure to deliver said form being a material breach of this Contract and a violation of the City's Code of Ordinances. Note, however, this subsection 32.6 shall not apply to full-time Employees who, as a condition of their employment, may be entitled to bonuses or other fees in accordance with their employment relationship.

32.7. The Person hereby expressly represents that he/she/it has complied with those sections of the City's Code of Ordinances requiring that said Person has **(i)** delivered to the

City an affidavit, on a City authored form, stating that the Person and its affiliates have no delinquent taxes or other financial obligations owned to the City; **(ii)** filed the City authored financial disclosure statement form as set forth in the City's Code of Ordinances regarding disclosure of financial interests; **(iii)** delivered to the City a written acknowledgement, on a City authored form, evidencing receipt of a copy of the "Ethics and Conflict of Interest" ordinance for the City of Waterbury and hereby expressly represents that said Person is in full compliance with the entirety of said Code of Ordinances; and **(iv)** filed a current list of all taxable personal and real property as required by the State of Connecticut General Statutes. Any violation of this subsection 32.7 shall be deemed a material breach of this Contract and shall be a violation of the City's Code of Ordinances.

32.8. The definitions set forth in the City's Code of Ordinances shall be the primary source for interpretation of the forgoing subsections 32.1-32.7.

32.9. The Consultant is hereby charged with the requirement that it shall have knowledge of, and shall fully comply with, all relevant provisions of the City's Charter and all relevant provisions of the City's Code of Ordinances, including without limitation Chapters 93, titled "Discriminatory Practices," Chapter 38 titled "Centralized Procurement System," and Chapter 39 titled "Ethics and Conflict of Interest," of said Code as may be amended from time to time.

32.10. The Consultant hereby acknowledges receipt of a copy of Chapters 38 and 39 of the City's Ordinance regarding Procurement, Ethics, and Conflicts of Interest and has familiarized itself with said Code and hereby agrees to adhere to said Code. The text of Chapters 38 and 39 of said Code may be obtained from the Office of the City Clerk of the City and on the internet at the City Clerk's web site: https://www.waterburyct.org/services/city-clerk/code-of-ordinances [click link titled "Code of Ordinances (*Rev. 12/31/19).*" For Chapter 38, click on "Title III: Administration," then click on "Chapter 38: Centralized Procurement System." For Chapter 39, click on "Title III: Administration," then click on "Chapter 39: Ethics and Conflicts ofInterest"].

32.11. The Consultant is hereby charged with the requirement that it shall have knowledge of, and shall fully comply with, the City's Ordinance Sections 34.15 through 34.99 entitled "Ordinance Concerning the Hiring of Waterbury Residents on Certain Publicly Funded Construction Projects," and the State of Connecticut Legislature's Special Act No. 01-1.

32.12. Every Person who conducts business with, contracts, with or provides commodities or services to the City, is charged with notice of the extent of the powers and authority, and the limitations thereon, of the Public Officials and Employees of the City, as set forth in the charter of the City, the Code of Ordinances and any Regulations or Policies pertaining thereto. In particular, and without implying any limitation as to its applicability, it applies to all Persons who participate in the procedures pertaining to the Centralized Procurement System as set forth in Chapter 38, and the Ethics and Conflict of Interest provisions set forth in Chapter 39 of the Code of Ordinances.

32.13. Interest of City Officials. No member of the governing body of the City, and no other officer, employee, or agent of the City who exercises any functions or responsibilities in connection with the carrying out of the Project to which this Contract pertains shall have any personal interest, direct or indirect, in this Contract.

32.14. Prohibition Against Contingency Fees. The Consultant hereby represents that it has not retained anyone to solicit or secure a contract with the City upon an agreement or understanding for a commission, percentage, brokerage or contingency fee.

32.15. Freedom of Information Act Notice. Pursuant to State statute, in the event the total compensation payable to the Consultant set forth in **Section 6** herein is greater than $2,500,000.00, the City is entitled to receive a copy of any and all Consultant records and files related to the performance of this Contract and those records and files are subject to the Freedom of Information Act ("the Act") and may be disclosed by the City pursuant to the Act.

33. Definitions. Whenever the following, words, terms, etc. appear in this Contract, the intent and meaning shall be as follows:

33.1 Additional Work: Work required by the City that involves a substantial addition to, deduction from or modification of the Contract Documents.

33.2 Bid or Proposal: The form on which the bidder is to submit a bid for the Work contemplated.

33.3 Bidder: A person, partnership, corporation or other business organization submitting a bid on the form for the Work contemplated.

33.4 City: The City of Waterbury, acting directly or through specifically authorized personnel, which currently is the School Inspectors Office.

33.5 Construction Supervisor: An employee of the City of Waterbury, or another City duly authorized person.

33.6 Contract Time: The number of days as stated in the Contract to: **(i)** achieve Substantial Completion and **(ii)** Final Completion.

33.7 Equal: The recognized equivalent in substance and function; considering quality, workmanship, economy of operation, durability and suitability for purposes intended, and not constituting a change in the Work specified. Whenever the words "equal" or "equals" or words of similar import are used, it shall be understood they mean "equal" in the opinion of the City.

33.8 Final Completion: The time at which the Project has progressed to the point where, in the opinion of the City, the Project is complete such that it is ready for final payment as

evidenced by the City's, or its duly authorized City representative's, written recommendation of final payment. The terms "finally complete" and "finally completed" as applied to the Project refer to Final Completion.

33.9 Notice to Proceed: A letter from the City which shall state the date of execution of the Contract and specifically advise the Consultant to begin work on the Contract.

33.10 Plans: All drawings or reproductions of drawings pertaining to the construction of the work contemplated and its appurtenances.

33.11 Project Engineer or Manager: An employee of the City or a person, partnership, corporation or other business organization under contract with the City, commissioned to perform construction administration and inspection duties during construction.

33.12 Shop Drawings: Drawings, diagrams, schedules, performance charts, brochures and other materials prepared by the Consultant or subcontractors, manufacturers or distributors which illustrate some portion of the work.

33.13 Specifications or Technical Specifications: The description, provisions and other requirements pertaining to the materials, methods and manner of performing the Project.

33.14 Subcontractor: A person, partnership, corporation or other business organization supplying labor and/or materials for work at the site of the Project to and under agreement with the Consultant.

33.15 Substantial Completion: The time at which, in the opinion of the Engineer, the Project (or a specified part thereof) is sufficiently complete, in accordance with the Contract Documents, so that the Project (or a specified part thereof) can be utilized for the purposes for which it is intended. The terms "substantially complete" and "substantially completed" as applied to all or part of the Project mean Substantial Completion thereof.

33.16 Substitution: A replacement of specified material, device or equipment which is sufficiently different in substance, function, quality or workmanship to become the subject of a Change Order.

33.17 Supplementary General Conditions: An extension to the terms, conditions, and provisions set forth in this document as additional, material, provisions of this Contract.

33.18 Work: All plant, labor, materials, services, supplies, equipment and other facilities and items necessary for, or incidental to, the completion of the terms of the Contract.

33.19 Using Agency: Department of Education.

SIGNATURE PAGE FOLLOWS

IN WITNESS WHEREOF, the Parties hereto execute this Contract on the dates signed below.

WITNESSES:

Sign:_____

Sign:_____

CITY OF WATERBURY

By:_____
Paul K. Pernerewski Jr., Mayor

Date:_____

WITNESSES:

Sign:_____

Sign:_____

SGNL COMMUNICATIONS, LLC

By:_____

Date:_____

ATTACHMENT A

1. Consultant's Quote, consisting of 3 pages and dated May 14, 2026 (attached hereto);
2. Any and all amendments and change orders, issued by the City after execution of Contract, incorporated herein by reference;
3. General Conditions (attached hereto);
4. City Contract Compliance Documents, incorporated herein by reference;
5. Certificates of Insurance, incorporated herein by reference;
6. Licenses, incorporated herein by reference; and
7. All applicable Federal, State, and local statutes, regulations charter and ordinances, including all regulations and guidelines of the DRIP Program, incorporated herein by reference.

QUOTE

SGNL Communications
96 Bank Street
Waterbury, CT 06702
(203) 527-3461

Quote #	DATE
26118	5/14/2026
CUSTOMER ID	**TERMS**
WTBY-PD	See Notes

Prepared by: Brandon Hudson Brandon@sgnlcomm.com 203-527-3461

QUOTE TO

Dan Barry
Director of Safety and Security
Waterbury Public Schools
236 Grand Street
Waterbury, CT 06702
(203) 574-6967 ext. 11281
daniel.barry@waterbury.k12.us

SHIP TO

Dan Barry
Director of Safety and Security
Waterbury Public Schools
236 Grand Street
Waterbury, CT 06702
(203) 574-6967 ext. 11281
daniel.barry@waterbury.k12.us

Quote Description: **Radio System BDA for Wilby HS and North End MS - 434,416 sq ft total complex**

MODEL or PART #	DESCRIPTION	UNIT PRICE	QTY	PRICE
1. Site Survey and Design	Site plan for three buildings overlaying building plans. Initial RF measurements documented.	18,995	1	18,995.00
2. Wilby HS - Active DAS Equipment	Bi-Directional Amplifier (BDA) System Equipment:: - TruePath Responder HeadEnd Kit includes Cabinet, Fiber management electronics, NMS, BDA signal source, Remote #1 for Fiber DAS - Battery Backup with AP8000C UPS - TrueConnect Annunciator Panel, Red, NEMA box	67,425	1	67,425.00
3. Wilby HS - Passive DAS Equipment	BDA Interior Antennas and Cabling: - TrueConnect Low PIM Ultra Thin Omnidirectional Antenna, 602-6000MHz with Plenum pigtail - Plenum 1/2 inch RF Cable - Directional Couplers 380-2700 MHz - Quick connect Fiber connectors - TrueLink 6 Strand Fiber Optic Cable, Indoor / Outdoor Armored, Plenum rated	19,750	1	19,750.00
4. Wilby HS - Carrier RF Source	BDA Exterior Antenna and Cabling: - 8 Element Yagi Antenna, 746-896 MHz - Lightning Protector - Mounting pole and hardware - Outdoor corregated 1/2 inch RF cable	1,755	1	1,755.00

QUOTE TO	SHIP TO
Dan Barry Director of Safety and Security Waterbury Public Schools 236 Grand Street Waterbury, CT 06702 (203) 574-6967 ext. 11281 daniel.barry@waterbury.k12.us	Dan Barry Director of Safety and Security Waterbury Public Schools 236 Grand Street Waterbury, CT 06702 (203) 574-6967 ext. 11281 daniel.barry@waterbury.k12.us

Quote Description: **Radio System BDA for Wilby HS and North End MS - 434,416 sq ft total complex**

MODEL or PART #	DESCRIPTION	UNIT PRICE	QTY	PRICE
5. Gym - Active DAS Equipment	Bi-Directional Amplifier (BDA) System Equipment:: - TruePath Responder Public Safety Remote Optical Unit Chassis - TruePath Responder Amplifier Module, 700PS/800PS including FirstNet - TrueConnect BatteryBackup unit for Public Safety DAS Systems	20,800	1	20,800.00
6. Gym - Passive DAS Equipment	BDA Interior Antennas and Cabling: - TrueConnect Low PIM Ultra Thin Omnidirectional Antenna, 602-6000MHz with Plenum pigtail - Plenum 1/2 inch RF Cable - Directional Couplers 380-2700 MHz - Quick connect Fiber connectors - TrueLink 6 Strand Fiber Optic Cable, Indoor / Outdoor Armored, Plenum rated	16,156	1	16,156.25
7. North End MS - Active DAS Equipment	Bi-Directional Amplifier (BDA) System Equipment:: - TruePath Responder Public Safety Remote Optical Unit Chassis - TruePath Responder Amplifier Module, 700PS/800PS including FirstNet - TrueConnect BatteryBackup unit for Public Safety DAS Systems	20,800	1	20,800.00
8. North End MS - Passive DAS Equipment	BDA Interior Antennas and Cabling: - TrueConnect Low PIM Ultra Thin Omnidirectional Antenna, 602-6000MHz with Plenum pigtail - Plenum 1/2 inch RF Cable - Directional Couplers 380-2700 MHz - Quick connect Fiber connectors - TrueLink 6 Strand Fiber Optic Cable, Indoor / Outdoor Armored, Plenum rated	14,360	1	14,360.00
9. Cellular boosting donor equipment	Carrier RF donor equipment for all three cell carriers. Prepares the system for cellular integration at a later time when budget allows	25,638	1	25,638.00
10. Labor and RF Services	DAS Installation Commissioning, Integration & Testing Project Management	140,625	1	140,625.00

QUOTE TO	SHIP TO
Dan Barry Director of Safety and Security Waterbury Public Schools 236 Grand Street Waterbury, CT 06702 (203) 574-6967 ext. 11281 daniel.barry@waterbury.k12.us	Dan Barry Director of Safety and Security Waterbury Public Schools 236 Grand Street Waterbury, CT 06702 (203) 574-6967 ext. 11281 daniel.barry@waterbury.k12.us

Quote Description: **Radio System BDA for Wilby HS and North End MS - 434,416 sq ft total complex**

MODEL or PART #	DESCRIPTION	UNIT PRICE	QTY	PRICE
11. Maintenance	SGNL provide 24/7 Corrective and Preventative Maintenance for as long as City of Waterbury maintains EFJohnson System Maintenance Contract, subcontracted through SGNL Communications	Included	1	0.00
	Net 30 days Payment Terms at three milestones:		Subtotal	346,304.25
Notes:	*1) Upon placing order for Line 1. - Site Survey and Design*			
	2) Upon equipment shipped from vendors to Waterbury: Lines 2-9			
	3) Upon completed installation: Line 10 Labor Services			
	Thank you for your business!		**TOTAL**	**346,304.25**
			Delivery	6 months ARO

If you have any questions about this quote, please contact:
sales@sgnlcomm.com

Pricing valid for 60 days from quote date for products and services in quantities listed

GENERAL CONDITIONS

INDEX TO GENERAL CONDITIONS

ARTICLE	TITLE	PAGE
1.	PLANS AND SPECIFICATIONS AT THE SITE	GC-1
2.	CONSTRUCTION PROGRESS SCHEDULE	GC-1
3.	ESTIMATED QUANTITIES	GC-2
4.	SCHEDULE OF VALUES; APPLICATION FOR PAYMENT	GC-2
5.	PARTIAL PAYMENTS	GC-2
6.	INSPECTION AND TESTS	GC-3
7.	UTILITIES	GC-3
8.	SEDIMENTATION AND EROSION CONTROL	GC-3
9.	PROTECTION OF ENVIRONMENTAL RESOURCES	GC-4
10.	ENVIRONMENTAL PROTECTION PLAN	GC-5
11.	TEMPORARY UTILITIES	GC-5
12.	ABBREVIATIONS	GC-5
13.	SUBSURFACE EXPLORATION	GC-7
14.	CONTRACT AND CONTRACT DOCUMENTS	GC-7
15.	SHOP DRAWINGS, CATALOG CUTS AND SAMPLES	GC-7
16.	CONTRACTOR'S TITLE TO MATERIALS	GC-8
17.	“OR EQUAL" CLAUSES	GC-8
18.	REPRESENTATIONS OF THE CONTRACTOR	GC-8
19.	PROTECTION OF WORK AND PROPERTY (EMERGENCY)	GC-9
20.	WEATHER CONDITIONS	GC-9
21.	SUBLETTING	GC-9
22.	SUBSTITUTE BOND	GC-10
23.	RIGHT TO WITHHOLD PAYMENTS	GC-10
24.	PAYMENTS BY CONTRACTOR	GC-10
25.	NOTICE OF WARNING	GC-10
26.	PROGRESS MEETINGS.	GC-10
27.	PERMITS	GC-10
28.	RIGHT TO USE THE WORK	GC-11
29.	PROVISIONS REQUIRED BY LAW	GC-11
30.	WAIVER	GC-11
31.	USE OF PREMISES AND REMOVAL OF DEBRIS	GC-11
32.	RIGHT OF WAY AND SUSPENSION OF WORK	GC-11
33.	CONSTRUCTION EQUIPMENT AND MACHINERY	GC-12

INDEX TO GENERAL CONDITIONS

ARTICLE	TITLE	PAGE
34.	CONTRACTOR'S GENERAL WARRANTY PERIOD	GC-12
35.	PROCEDURE IN CONSTRUCTION	GC-13
36.	APPRENTICES	GC-13
37.	CONTROL OF WORK	GC-13
38.	CITY'S CONTROL NOT LIMITED	GC-13
39.	AUTHORITY AND DUTIES OF INSPECTORS	GC-13
40.	INSPECTION AND CORRECTION OF WORK	GC-14
41.	CONTRACTOR'S OBLIGATIONS	GC-14
42.	TOILET ACCOMMODATIONS AND DRINKING WATER	GC-15
43.	SAFETY AND HEALTH REGULATIONS	GC-15
44.	OWNERSHIP OF DRAWINGS AND SPECIFICATIONS	GC-15
45.	RESIDENTS' PREFERENCE IN WORK ON OTHER PUBLIC FACILITIES	GC-15
46.	LISTING OF EMPLOYMENT OPENINGS	GC-15
47.	SERVICE OF PROCESS	GC-16
48.	CITY OF WATERBURY ORDINANCE CHAPTER 34	GC-16
49.	WAGE RATES	GC-16
50.	SCHEDULE AND POSTING OF MINIMUM WAGE RATES	GC-16
51.	COMPUTATION OF WAGES AND OVERTIME COMPENSATION	GC-17
52.	WAGE UNDERPAYMENTS AND ADJUSTMENTS	GC-17
53.	CONFORMANCE OF WORK	GC-17
54.	DIMENSIONS AND SCHEDULES	GC-17
55.	PROTECTION FROM STORM	GC-17
56.	PROTECTION OF WORK AND MATERIALS	GC-17
57.	FURTHER SAFEGUARDS	GC-17
58.	FIRST AID TO INJURED	GC-18
59.	CONFORMANCE WITH DIRECTIONS	GC-18
60.	COMPETENT HELP TO BE EMPLOYED	GC-18
61.	STREETS AND SIDEWALKS TO BE KEPT OPEN	GC-18
62.	LIGHTS, BARRIERS, FENCES, WATCHMEN & INDEMNITY	GC-18
63.	WORK OUTSIDE REGULAR HOURS	GC-19
64.	BUS LINE INTERFERENCE	GC-19
65.	COLD WEATHER WORK	GC-19
66.	BLASTING AND EXPLOSIVES	GC-19

INDEX TO GENERAL CONDITIONS

ARTICLE	TITLE	PAGE
67.	TUNNELING	GC-20
68.	RESERVED MATERIALS/EXCAVATED MATERIALS	GC-20
69.	OBSTRUCTIONS AND CROSSOVERS	GC-20
70.	DIRECTIONAL SIGNS AND LIGHTS	GC-21
71.	MAINTENANCE OF WORKPLACE	GC-21
72.	OPERATIONS AT SEVERAL POINTS	GC-21
73.	INTERFERENCE WITH EXISTING STRUCTURES	GC-21
74.	TURF, TOPSOIL AND OTHER REPLACEMENT ITEMS	GC-21
75.	MATERIALS	GC-21
76.	DEFECTIVE MATERIALS	GC-22
77.	INSPECTION AND TESTING OF FURNISHED MATERIALS.	GC-22
78.	SAMPLES AND ORDERING LISTS	GC-22
79.	SANITARY CONVENIENCES	GC-22
80.	FINISHING AND CLEANING UP	GC-22
81.	RIGHTS OF ACCESS	GC-22
82.	WORK BY OTHERS	GC-23
83.	WORK WITHIN THE LIMITS OF PRIVATE PROPERTY	GC-23
84.	LOADING	GC-24
85.	COMPLETION OF WORK	GC-24
86.	DUST AND SPILLAGE CONTROL	GC-24
87.	CARE OF THE WORK	GC-24
88.	EMERGENCY WORK	GC-24
89.	FIRE PREVENTION AND PROTECTION	GC-25
90.	PLANIMETER	GC-25
91.	SUPERINTENDENCE	GC-25
92.	CONTRACT ADMINISTRATION COSTS - OUTSIDE REGULAR HOURS	GC-25
93.	DAILY REPORTS	GC-25
94.	MATERIAL AND WORKMANSHIP	GC-25
95.	TEMPORARY WATER SUPPLY	GC-26
96.	FITTING AND COORDINATION OF WORK	GC-26
97.	ARCHEOLOGICAL FINDS	GC-26
98.	EXCAVATIONS NEAR UNDERGROUND UTILITIES	GC-26
99.	WATER QUALITY OF WELLS.	GC-27

INDEX TO GENERAL CONDITIONS

ARTICLE	TITLE	PAGE
100.	WORK IN STATE HIGHWAYS	GC-27
101.	EXISTING INSPECTION REPORTS	GC-27
102.	TEST REPORTS; CERTIFICATES OF COMPLIANCE AND SHIPPING LISTS	GC-27
103.	CLEANING FINISHED WORK	GC-27
104.	COMPLIANCE TO ACTS AND EXECUTIVE ORDERS	GC-28
105.	SEMI-FINAL INSPECTION / SUBSTANTIAL COMPLETION	GC-28
106.	CITY'S CERTIFICATE OF SUBSTANCIAL COMPLETION	GC-28
107.	LIMITED ACCEPTANCE OF WORK	GC-29
108.	FINAL INSPECTION	GC-29
109.	FINAL CHANGE ORDER	GC-29
110.	FINAL PAYMENT APPLICATION	GC-30
111.	FINAL COMPLETION/ CITY'S CERTIFICATE OF FINAL COMPLETION / NOTICE OF PROJECT ACCEPTANCE	GC-30
112.	ACCEPTANCE OF FINAL PAYMENT	GC-30
113.	10-HOUR OSHA CONSTRUCTION SAFETY AND HEALTH COURSE	GC-30

GENERAL CONDITIONS

INTRODUCTORY NOTE:

These General Conditions supplement the provisions and requirements of Contract and modify all Contract Documents which follow it numerically, as set forth in Section 1.2 of the Contract. The General Conditions may be amended, revised or supplemented by the Special Conditions which are project specific. The Contractor's attention is directed to the attached Special Conditions for any amendments, revisions or supplements to the General Conditions for this project. The terms used in these General Conditions which are defined in the Contract have the meanings assigned to them in said Contract.

This section applies equally and specifically to all contractors supplying labor and/or equipment and/or materials for this Project and all drawings, specifications and general provisions of the Contract apply to these General Conditions. Where items of the Contract are repeated, it is intended to call particular attention to or qualify them; it is not intended that any other parts of the Contract shall be assumed to be omitted if not repeated herein.

Unless expressly provided for otherwise in the Contract Documents, all costs associated with any work/services required or necessary under the General Conditions shall be considered as included in the Contract Amount (also referred to as Total Compensation). No separate or additional payment will be made for this work and/or services.

As used herein, "Bid" or "bid" shall mean the form on which the Bidder or Proposer is to submit a Bid or Proposal for the Work contemplated.

ARTICLE 1. PLANS AND SPECIFICATIONS AT THE SITE / AS-BUILT DRAWINGS

1.01 The Contractor shall maintain at the Project site two (2) copies of all Plans, Specifications, Addenda, approved Shop Drawings, Change Orders and other Modifications, Schedules and Instructions, in good order. One copy is to be marked to record all changes made during construction. These shall be available at all times to the Project Engineer and the City or their authorized representatives. At the conclusion of construction, the Contractor is to turn one (1) corrected set of all documents over to the Project Engineer.

ARTICLE 2. CONSTRUCTION PROGRESS SCHEDULE

2.01 Within seven (7) consecutive calendar days of the written Notice to Proceed, and prior to commencement of any work on site, the Contractor's certified scheduler shall prepare and submit for the approval of the City three (3) copies of a complete Construction Progress Schedule which shall be comprised of a critical path method network. (At the same time, the Contractor shall submit the Schedule of Values, Sedimentation and Erosion Control Measures, Water Control Plan and Environmental Protection Plan, as outlined in the various Articles of these General Conditions). If the Contractor does not have a certified scheduler in house then the Contractor is responsible for hiring a subconsultant to prepare all of the schedules and updates. The resume of the certified scheduler (primavera, P6, or equal) shall be provided for approval of the City.

2.02 The critical path of the Project must be identified on the Construction Progress Schedule which shall provide a workable plan for monitoring the progress of all the elements of the Project, establish and clearly display the critical elements of the Work, on which each part or division of the Work is expected to be started and completed, forecast completion of the elements of the Project, and match the Contract duration in time. The Construction Progress Schedule shall also indicate the logic of the work for the major elements and components of work under the Contract, such as the planned mobilization of plant and equipment, sequences of operations, procurement of materials and equipment, duration of activities, type of relationship, lag time (if any), and such other information as it is necessary to present a clear statement of the intended activities.

2.03 The schedule shall indicate all subcontractors to be utilized on the Contract and the portions of the Contract that they will be performing. The Contractor shall evaluate the status of the Project at least monthly, comparing it to the original schedule, which shall be revised as required. The Contractor shall notify the Project Engineer immediately of any circumstances that may affect the current schedule.

2.04 The Contractor shall perform the work of this Contract to satisfy the Construction Progress Schedule as approved by the Project Engineer. However, the Project Engineer and City reserve the right to amend and alter the Construction Progress Schedule, as approved, at any time and in a manner which the Engineer deems to be in the best interests of the

City.

2.05 The Contractor shall be required to execute his work in accordance with the Construction Progress Schedule as prepared and in accordance with any additional requirements specified herein and approved by the Project Engineer. The Construction Progress Schedule shall forecast the times for doing each portion of the work. The Contractor shall arrange the work under this Contract to conform with the Construction Progress Schedule, as it may be revised by the Engineer from time to time, at no additional expense to the City.

2.06 The revised Construction Project Schedule shall take some or all of the following actions to demonstrate the manner in which an acceptable rate of progress will be regained, by the following methods:

i. Increase construction manpower in such quantities and crafts as shall substantially eliminate the backlog of work and meet the current Contract completion date.
ii. Increase the number of working hours per shift, the number of shifts per day, the number of workdays per week, or the amount of construction equipment, or any combination of the foregoing
iii. Reschedule work items to achieve concurrent accomplishment of work activities.

2.07 Under no circumstances will the adding of equipment or construction forces, increasing the working hours, or employing any other method, manner, or procedure to return to the contractually required completion dates be a justification for additional compensation to the Contractor.

ARTICLE 3. ESTIMATED QUANTITIES

3.01 Any Estimated Quantities for the Project furnished by the City, including those provided on the Bid Form, are approximate only and are: a) for procurement related comparison purposes only, b) given as a basis for the pricing and c) are not represented to be actual quantities for completion of the Work. Within the limits of available funds, the Contractor will be required to complete the Work at the unit prices provided in the Bid Form/or Price Proposal whether it involves quantities greater or lesser than the estimate. The Contractor will be compensated only for the actual quantity of authorized, and actually performed, and/or materials furnished.

ARTICLE 4. SCHEDULE OF VALUES; APPLICATION FOR PAYMENT

4.01 Within seven (7) consecutive calendar days after the Notice to Proceed, as a basis for estimating partial payments, the Contractor shall submit for the approval of the City a certified Schedule of Values, broken down into quantities and unit costs for the various parts of the work, divided as may be directed and aggregating the total sum of the Contract; and if required, he shall submit evidence supporting this schedule.

4.02 The Contractor's requisition for payment shall be submitted on forms approved by the City and shall be in such numbers of copies as may be designated by the City. Sample forms are included in the Bid Documents. Alternate payment application forms may be utilized provided they are approved by the City, in writing, prior to submission by the Contractor.

4.03 If the Project is funded by multiple funding sources, the Contractor may be required to submit separate requisitions for payment to each source, on the forms provided by each source and in accord with all requirements of each individual funding source.

4.04 For Lump Sum projects, the requirements for the Schedule of Values are further defined as follows: a) the Schedule of Values shall delineate the various tasks that comprise the lump sum items. Each item in the Schedule of Values shall include its proper share of overhead and profit. This schedule, when accepted by Project Engineer, shall only be used as a basis for Contractor’s periodic payment applications. No payment will be made to Contractor until such Schedule has been submitted and accepted by Project Engineer, and b) the lump sum item shall be broken down sufficiently to provide a convenient and realistic means for determining the amount of work done during various stages of progress.

ARTICLE 5. PARTIAL PAYMENTS

5.01 The City will review the Contractor's monthly requisitions for Partial Payments to arrive at what is, in its opinion,

a fair and just estimate of the materials suitably stored on the site and the amount of work performed on the Contract. At its discretion, the City may allow to be included in the monthly requisitions materials stored off the site. In the event the City allows the Contractor to include in its requisitions payments for materials stored off the site, the Contractor shall also submit any additional bonds and/or insurance certificates relating to off-site stored material, and follow such other procedures as may be required by the City.

5.02 In making such Partial Payments for the Project, retainage shall be held in the amount of 5% of the value of work completed to date. The Retainage does not include additional sums that the City may withhold due to the Contractors failure to comply with construction plans, specifications etc. deemed provisions of this contract.

5.03 Where prices are not broken down sufficiently in the Schedule of Values to accurately determine the value of work completed, Project Engineer will estimate the value of work completed and will deduct some amount so as to arrive at a conservative value which will allow City to easily complete the Work with the unpaid balance. When the required detail in the Schedule of Values is not provided by Contractor, Contractor agrees to accept Project Engineer's determinations.

5.04 The contractor shall supply notarized lien waivers with each notarized monthly application for payment for all subcontractors and suppliers documenting that the contractor is paying all subcontractors and suppliers monthly. For further information regarding compliance with lien waivers refer to article 23.

5.05 In the City's sole discretion, it may require a joint check agreement between the Contractor and any of its subcontractors to ensure prompt payment of payment requisitions.

ARTICLE 6. INSPECTION AND TESTS

6.01 All material and workmanship shall be subject to inspection, examination and testing by the City and/or Project Engineer (in addition to that required by the Specifications) any and all times during manufacture and/or construction and at any and all places where such manufacture and/or construction is carried on. Notice of the time of all tests to be made at the site shall be given to all interested parties.

6.02 Contractor must obtain the Engineer's approval of any sources of materials to be incorporated into the Project before beginning to use them for the Project.

6.03 If, at any time before issuance of a Notice of Project Acceptance by the City, the City and/or Project Engineer considers it necessary or advisable to examine any portion of the Project already completed by removing or testing out the same, the Contractor shall upon request furnish promptly all necessary facilities, labor and materials. If such work is found to be defective in any material respect because of a fault of the Contractor or any of its subcontractors, or if any work shall have been covered over without the approval or consent of the City (whether or not it is found to be defective), the Contractor shall be liable for testing costs and all costs of correction, including labor, material, services of required consultants, additional supervision and administrative costs.

6.04 Unless expressly provided for otherwise, for Projects that include material testing to ensure compliance with the Technical Specifications, the Contractor shall be responsible for all testing as required in the relevant sections of the Technical Specifications.

6.05 Without additional charge, the Contractor shall promptly furnish all reasonable facilities, labor and materials necessary to make tests safe and convenient. Special, full size and performance tests shall be as described in the Specifications.

ARTICLE 7. UTILITIES

7.01 The accuracy and completeness of the utility information shown on the Plans and/or otherwise provided by the City is not guaranteed. The Contractor shall make its own investigation of the extent and location of utilities and of the possibility of relocation work by the utility companies and shall plan its operations accordingly. No claim for any delays, damage or extra work occasioned thereby will be allowed.

7.02 The Contractor shall allow others access to the Project for the purpose of placing, relocating or maintaining

utilities, and he shall cooperate in every way in the performance of this Project.

7.03 The Contractor shall notify the utility owners well in advance of the time the Contractor proposes to perform any work which would endanger utility installations, and the Contractor shall cooperate with the utility owners in relocating and/or protecting such installations during construction operations.

7.04 No payment will be made to the Contractor for locating, protecting and arranging for the relocation of public utilities or for any delays caused thereby. The Contractor shall include all costs of this Project in other scheduled items of the Contract.

ARTICLE 8. SEDIMENTATION AND EROSION CONTROL

8.01 All watercourses shall be protected from sedimentation, both during and after construction. The Contractor shall control erosion and sedimentation problems in accordance with Connecticut Guidelines for Soil Erosion and Sediment Control prepared by the Connecticut Council on Soil and Water Conservation, dated 2002, as amended.

8.02 The Contractor shall submit the Sedimentation and Erosion Control Plan for the approval of the Project Engineer within seven (7) consecutive calendar days after the Notice to Proceed.

8.03 The Contractor shall be responsible for providing silt fences, staked haybales and other temporary erosion control measures which may be required to properly complete this Project. No extra compensation will be allowed, due to water or precipitation levels fluctuation.

ARTICLE 9. PROTECTION OF ENVIRONMENTAL RESOURCES

9.01 The environmental resources within the Project boundaries and those affected outside the limits of permanent work under this Contract shall be protected during the entire period of this Contract. The Contractor shall confine its activities to areas defined by the Plans and Specifications. Environmental protection shall be as stated in the following subparagraphs:

A. Prior to the beginning of any construction, the Contractor shall identify all land resources to be preserved within the work area. The Contractor shall not remove, cut, deface, injure or destroy land resources including trees, shrubs, vines, grasses, topsoil and landforms without special written permission from the property owner. No ropes, cables or guys shall be fastened or attached to any trees for anchorage unless specifically authorized in writing by the Project Engineer. Where such special emergency use is permitted, the Contractor shall provide effective protection for land and vegetation resources at all times as defined in the following subparagraphs.

B. Prior to any construction, the Contractor shall mark the areas that are not required to accomplish all work to be performed under the Contract. Isolated areas within the general work area which are to be saved and protected shall also be marked or fenced. Monuments and markers shall be protected before construction operations commence. Where construction operations are to be conducted during darkness, the markers shall be visible. The Contractor shall convey to its personnel the purpose of marking and/or protection of all necessary objects.

C. Trees, shrubs, vines, grasses, landforms and other landscape features indicated and defined on the Plans to be preserved shall be clearly identified by marking, fencing or wrapping with boards, or any other approved techniques.

D. Earthwork brought to final grade shall be finished as indicated and specified. Side slopes and back slopes shall be protected as soon as practicable upon completion of rough grading. All earth work shall be planned and conducted to minimize the duration of exposure of unprotected soils. Except in instances where the constructed feature obscures borrow areas, quarries and waste material areas, these areas shall not initially be cleared in total. Clearing of such areas shall progress in reasonably sized increments as needed to use the areas developed as approved by the City and/or Project Engineer.

E. Runoff from the construction site shall be controlled by the construction of diversion ditches, benches and berms to retard and divert runoff to protected drainage courses, and any measures required by area wide

plans approved under Paragraph 208 of the Clean Water Act, as amended.

F. The Contractor shall construct or install all temporary erosion control features as indicated in the submitted Sedimentation and Erosion Control Plans or directed by the City and/or Project Engineer. Temporary erosion control measures such as berms, dikes, drains, grassing and mulching shall be maintained until construction of the Project is completed.

G. The Contractor's field offices, staging areas, stockpile storage and temporary buildings shall be placed in areas designated on the submitted Plan. Temporary movement or relocation of the Contractor's facilities shall be made only on approval by the City and/or Project Engineer.

H. Borrow areas shall be managed to minimize erosion and to prevent sediment from entering nearby watercourses.

I. Spoil areas shall be managed and controlled to limit spoil areas and to prevent erosion of soil or sediment from entering nearby watercourses. Spoil areas shall be developed in accordance with the grading plan indicated on the Plans.

ARTICLE 10. ENVIRONMENTAL PROTECTION PLAN

10.01 Within seven (7) consecutive calendar days after the Notice to Proceed, and prior to commencement of any work on site, the Contractor shall submit an Environmental Protection Plan for the approval of the City in accordance with the provisions herein specified. The plan shall include but not be limited to the following:

A. A list of Federal, State, and Local laws and regulations concerning environmental protection, pollution control and abatement that are applicable to the Contractor's proposed operations and the requirements imposed by those laws and regulations.

B. Methods for protection of features to be preserved within authorized work areas. The Contractor shall prepare a list of methods to protect resources needing protection, i.e., trees, shrubs, vines, grasses and groundcover, landscape features, air and water quality, fish and wildlife, soil, historical, archeological and cultural resources.

C. Procedures to be implemented by the Contractor to provide the required environmental protection and to comply with applicable laws and regulations. The Contractor shall set out the procedures to be followed to correct pollution of the environment due to accident, natural causes or failure to follow the procedures set out in accordance with the Environmental Protection Plan.

D. The location of the nearest suitable solid waste disposal area and a permit allowing the Contractor to use those facilities.

E. Drawing showing locations of any proposed temporary excavations or embankments for haul roads, stream crossings, material storage areas, structures, sanitary facilities, and stockpiles of excess' or spoil materials.

F. Environmental monitoring plans for the job site, including land, water, air and noise monitoring as necessary, and as required by the Project Engineer.

G. Environmental monitoring and management plans for any endangered wildlife or plant species as determined by CT DEEP, City or Project Engineer.

H. Traffic control plan when necessary.

I. Methods of protecting surface and ground water during construction activities.

J. Work area plan showing the proposed activity in each portion of the area and identifying the areas of limited use or nonuse. The plan should include measures for marking the limits of use areas.

ARTICLE 11. TEMPORARY UTILITIES

11.01 Unless expressly otherwise provided for in the Contract Documents the Contractor shall be responsible for determining and supplying at no cost to the City all temporary utilities of any nature whatsoever needed to complete the work. Unless otherwise provided for in the Bid Documents, all necessary temporary utilities shall be installed at the start of the Project.

ARTICLE 12. ABBREVIATIONS

12.01 Where one of the following abbreviations are used in the Contract Documents, it shall have the meaning set forth opposite each below:

AASHTO	American Association of State Highway and Transportation Officials
ACI	American Concrete Institute
AGA	American Gas Association
AIEE	American Institute of Electrical Project Engineers
AISC	American Institute of Steel Construction
API	American Petroleum Institute
ANSI	American National Standards Institute
ASCE	American Society of Civil Engineers
ASHRAE	American Society of Heating, Refrigeration and Air Conditioning Engineers
ASME	American Society of Mechanical Engineers
ASTM	American Society of Testing and Materials
AWG	American (or Brown and Sharpe) Wire Gauge
AWWA	American Water Works Association
CONNDOT	Connecticut Department of Transportation
DEP	Department of Environmental Protection
EDR	Equivalent Direct Radiation
EPA	Environmental Protection Agency
FWQA	Federal Water Quality Administration
IBR	Institute of Radiator and Boiler Manufacturers
MCB	Master Car Builders
NBS	National Bureau of Standards
NEC	National Electrical Code (latest edition)
NEMA	National Electrical Manufacturers Association
NEWWA	New England Water Works Association

NFPA	National Fire Protection Agency
NPT	National Pipe Thread
SMACNA	Sheet Metal and Air Conditioning Association
OS&Y	Outside Screw and Yoke
STL.WG	United States Steel Wire, Washburn and Moen, American Steel And Wire Companies and Roebling Gauge
USS GAUGE	United States Standard Gauge
WOG	Water, Oil, Gas
WSP	Water Steam Pressure
"Federal Specification"	A Federal specification issued by the Federal Supply Services Administration, Washington, D.C.

ARTICLE 13. SUBSURFACE EXPLORATION

13.01 Where applicable, and if provided by the City, boring logs, probes and related information contain data regarding subsurface conditions at the dates and location indicated. This information is shown for the convenience of the Contractor, but is not guaranteed to be correct or complete, and it is not warranted that it represents a true or approximately true picture of the actual subsurface conditions to be encountered.

ARTICLE 14. CONTRACT AND CONTRACT DOCUMENTS

14.01 The City's record copy of the Contract Documents shall control and shall be effective and binding on the Contractor. In the event that any provision in the Contract Documents conflicts with any other provision therein, the priority of the documents shall be in accordance with Section 1.2 of the Contract.

14.02 The City shall interpret its own requirements. In case of any conflict or inconsistency between the provisions of this signed portion of the Contract and those any other Contract Documents, refer to Contract Section 1.2.

ARTICLE 15. SHOP DRAWINGS, CATALOG CUTS AND SAMPLES

15.01 The Contractor shall promptly submit to the Project Engineer five copies of each submittal prepared in accordance with the approved schedule. After examination of such submittal by the Project Engineer and the return thereof, the Contractor shall make such corrections to the submittal as have been indicated and shall furnish the Project Engineer with five corrected copies. If requested by the Project Engineer, the Contractor must furnish additional copies. Regardless of corrections made on, or approvals given to, such submittal by the Project Engineer, the Contractor shall nevertheless be responsible for the accuracy of such submittal. The Contractor shall also be responsible for the submittal's conformity to the Submittal and Specifications, unless the Contractor notifies the Project Engineer in writing of any deviations at the time of submission of the submittal. The submittals shall be submitted as provided in the Technical Specifications and shall be tied to the baseline schedule submittal and updated monthly.

15.02 Submittal of all fabricated work shall be submitted to the Project Engineer and no work shall be fabricated unless it is done at the Contractor's own risk until approval has been given by the Project Engineer and City.

15.03 The Contractor shall submit all submittals on dates sufficiently in advance of requirements in order to enable the Project Engineer and City to properly review them. This period shall include time to correct, resubmit and recheck, if necessary, and no claim for delay will be granted to the Contractor because of the Contractor's failure in this respect. The Project Engineer and City will be given a minimum of fourteen (14) consecutive calendar days for the initial review of each submitted submittal.

15.04 All submitted submittals must bear the approval stamp of the Contractor and reference conformance to the applicable provisions of the Specifications as evidence that the Contractor has checked the drawings. Any drawings submitted without this stamp of approval will not be considered and will be returned to the Contractor for resubmission. If the submittals show variations from the requirements of the Contract Documents because of standard shop practice or other reason, the Contractor shall make specific mention of such variation in the letter of submission to the Project Engineer. If the variation is acceptable to the Project Engineer and City, suitable action may be taken for proper adjustment. If not acceptable, the Contractor shall not be relieved from the responsibility for executing the work in accordance with the Contract Documents, although such submittals had been approved.

15.05 Where submittals are submitted by the Contractor that indicate a departure from the Contract Drawings which the Project Engineer deems to be a minor adjustment and in the City's interest and not involving a change in the Contract price or an extension in time, then the Project Engineer may approve the drawings. Such approval will contain, in substance the following:

> The modification shown on the attached drawings is approved in The interest of the City to affect an improvement for the project and is ordered with the understanding that it does not involve any change in the Contract price or time. The modification is generally subject to all Contract stipulations and covenants, and it is without prejudice to any and all rights of the City under the Contract.

The approval of submittals will be general and shall not relieve the Contractor from the responsibility for adherence to the Contract nor of the responsibility for any errors that may exist.

15.06 The Contractor agrees to hold the Project Engineer and the City harmless and to defend them against damage or claims for damages arising out of injury to others or to property of third parties which result from errors on shop or working drawings, whether or not they have been approved by the Project Engineer and/or the City.

15.07 Working Drawings. When required by the Contract or when ordered to do so by the City Representative, the Contractor shall prepare and submit 4 copies of the working drawings to the City Representative for review. These drawings shall be submitted sufficiently (at least 15 consecutive calendar days) in advance of the proposed use, to allow for their review, and any necessary revisions, without delay of the Project. No work covered by these working drawings shall be done until the drawings have been submitted to the City Representative for review and the City Representative's comments have been appropriately taken into account and implemented. The furnishing of the working drawings shall not serve to relieve the Contractor of any part of its responsibilities under the Contract.

ARTICLE 16. CONTRACTOR'S TITLE TO MATERIALS

16.01 No material, supplies or equipment for the work shall be purchased by the Contractor, or by any Subcontractor, subject to any chattel mortgage or under any conditional sale or other agreement by which an interest therein or in any part thereof is retained by the seller or supplier. The Contractor warrants good title to all material, supplies and equipment installed or incorporated in the work. The Contractor further warrants that, upon completion of all work, he will deliver the premises, together with all improvements and appurtenances constructed thereon, to the City free of any claims, liens, charges or encumbrances. The Contractor further warrants that neither the Contractor nor any person, firm or corporation furnishing any material, labor or equipment for any work covered by this Contract shall have a right to lien upon the premises or any improvement or appurtenance thereon.

ARTICLE 17. "OR EQUAL" CLAUSES

17.01 Unless otherwise provided for in the Bid Documents, the Contract will be on the basis of material and equipment described on the Bid Documents without consideration of possible substitute or "equal" items. However, subsequent to award of the Work, whenever a material or article required is specified or shown on the plans by using the name of a proprietary product or of a particular vendor or manufacturer, any materials or article which, in the sole discretion of the Project Engineer, is equal or superior to the specified item to material, may be considered an "equal." Requests for substitutions must be supported by evidence such as technical data, test results, or other pertinent information that demonstrates that the substitute offered is equal or better than the specification's requirements. Such items shall not be purchased or installed without the written approval of the Project Engineer. In all cases, only new materials shall be used for the work.

ARTICLE 18. REPRESENTATIONS OF THE CONTRACTOR

18.01 The Contractor represents and warrants:

(a) That he is financially solvent and that he is experienced and competent to perform the type of work or to furnish the plant, material or equipment to be performed or furnished by him; and

(b) That he is familiar with all Federal, State, and municipal laws, ordinances, orders and regulations which may in any way affect the work of those employed therein, including but not limited to any special acts relating to the work or to the project of which it is a part; and

(c) That such permanent and temporary work required by the Contract Documents to be done can be satisfactorily constructed and be used for the purpose for which it is intended, and that such construction will not injure any person nor damage any property; and

(d) That he has carefully examined the drawings, specifications and addendum (or addenda) if any, and the site of the work, and that, from his own investigations, he has satisfied himself as to the nature, quality and quantity of surface and subsurface materials likely to be encountered; of the character of equipment required for the work; of other facilities needed for the performance of the work; of the general and local conditions and of all other materials which in any way may affect the work and its performance; and

(e) That he is aware of the hazards involved in the work and the danger to life and property both evident and inherent and that he will conduct the work in a careful and safe manner without injury to persons or property; and that he can provide the necessary equipment, labor and materials to complete the contract work within the specified contract duration.

ARTICLE 19. PROTECTION OF WORK AND PROPERTY (EMERGENCY)

19.01 The Contractor shall at all times safely guard and protect the City's property from injury or loss in connection with this contract. He shall at all times safely guard and protect his own work and that of adjacent property from damage. The Contractor shall replace or make good any such damage, loss or injury unless such is caused directly by errors contained in the Contract or by the City or his duly authorized representatives.

19.02 In case of an emergency that threatens loss or injury of property and/or safety of life, the Contractor will be allowed to act in a diligent manner without previous instructions from the City. He shall notify the City immediately thereafter.

19.03 Where the Contractor has not acted but has notified the City of an emergency threatening injury to persons or damage to the work or to any adjoining property, he shall act as instructed or as authorized by the City.

19.04 The amount of reimbursement claimed by the Contractor on account of any emergency action shall be determined in the manner provided elsewhere in the Contract Documents.

ARTICLE 20. WEATHER CONDITIONS

20.01 In case of temporary suspension of the work, or during inclement weather, or whenever the City shall direct, the Contractor shall carefully protect his work and materials against damage or injury from the weather. The Contractor shall cause all his subcontractors to provide the same protection for their portion of the work. If, in the opinion of the City, any work or material was damaged or injured by reason of failure on the part of the Contractor, or any of his subcontractors, so to protect his work, or otherwise damaged by the negligence of the Contractor or any of his subcontractors or their agents or servants, or is otherwise defective, such materials shall be removed and replaced at the expense of the Contractor.

20.02 For projects involving asphalt paving, all work shall be temporarily suspended, upon direction of the City, when the Contractor can no longer properly pave exposed areas in accordance with the plans and specifications during inclement weather or during winter months.

ARTICLE 21. SUBLETTING

21.01 The Contractor is not to assign, transfer or sublet the Contract in whole or in part to any other person or persons without written permission from the City. The Contractor cannot abridge the terms of the Contract in any way without written permission of the City. The Contractor must keep the Contract in his name and control until all work is completed the City has issued a Notice of Project Acceptance for the Project. The Contractor shall likewise not assign any of the money payable under this Contract. Approval by the City of the subletting of any part of the work shall not, under any circumstances, relieve the Contractor or his Surety of any liabilities or obligations under the terms of the Contract Documents.

21.02 The Contractor shall be as fully responsible to the City for the acts and omissions of his subcontractors, and of the persons either directly or indirectly employed by them, as he is for the acts and omissions of persons directly employed by him. Should any subcontractor violate any of the terms of these specifications, the City may, at its option, require the Contractor to end and terminate such subcontract.

21.03 The Contractor shall cause appropriate provisions to be inserted in all subcontracts relative to the work to bind subcontractors to the Contractor by the terms of the Contract and the General Conditions and other provisions of the Contract Documents. This language is to be applicable insofar as necessary to the work and is to give the Contractor the same power as regards terminating any subcontract as the City may exercise over the Contractor under any provisions of the Contract Documents.

21.05 Nothing contained in this Contract shall create any contractual relation between the City and any subcontractor.

ARTICLE 22. SUBSTITUTE BOND

22.01 If, at any time, the Contractor's Surety or Sureties, or the carriers of other insurance herein specified to be written, become insolvent or, in a reasonable judgment of the City, become unsafe or unsound then, upon five days written notice from the City to the Contractor, the Contractor shall substitute such Performance and Labor and Material Bond or insurance with such other Surety or carrier in such form as shall be acceptable to the City. Any additional premium caused by such substitution shall be paid for by the Contractor. No further payments will be deemed due nor will be made until the new Surety or Sureties have furnished such an acceptable bond to the City.

ARTICLE 23. RIGHT TO WITHHOLD PAYMENTS

23.01 The City may withhold from the Contractor so much of any approved payments due as may in the judgment of the City be necessary to:

1. Assure the payment of any lien, stop notice or claim, filed with the City for work, labor, or materials done, performed or delivered and used in the prosecution of the work herein provided for (whether in strictly legal form or otherwise)
2. Protect the City from loss due to defective work not remedied or through any improper or defective machinery, implements or appliances used by the Contractor or for failure of the Contractor to fully comply with any requirements of the Contract
3. Protect the City from loss due to injury to persons or damage to work or property of other contractors, subcontractors or others caused by the act' or neglect of the Contactor or any subcontractors.

23.02 The City shall have the right, as agent for the Contractor, to apply any amounts so withheld in such manner as the City may deem proper to satisfy such claims or to secure such protection. Such applications of such money shall be deemed payments to the account of the Contractor.

23.02 Notwithstanding the above, the Contractor, in conformance with Section 49-41a of the Connecticut General Statutes, as revised, shall, within 30 consecutive calendar days after any given Contract payment to the Contractor by the City, pay any amounts due to any subcontractor, whether for labor performed or materials furnished.

ARTICLE 24. PAYMENTS BY CONTRACTOR

24.01 The Contractor, in conformance with Section 49-41a of the Connecticut General Statutes, as revised, shall, within

30 consecutive calendar days after any given Contract payment to the Contractor by the City, pay any amounts due any subcontractor, whether for labor performed or materials.

ARTICLE 25. NOTICE OF WARNING

25.01 If the Contractor shall fail to make prompt payment to persons supplying labor or materials for the work; or refuse or fail to supply enough properly skilled workmen or proper materials; or refuse or fail to prosecute the work or any part thereof in accordance with the Contract Documents or with such diligence as will insure its completion within the period herein specified (or any duly authorized extension thereof); or fail to complete the work within said period; or refuse to regard laws ordinances, codes or instructions of the City then the City shall forward A Notice of Warning to the Contractor by registered mail at the address given in the Contract. In the event the Contractor fails to comply with said Notice of Warning within five (5) consecutive calendar days from receipt thereof, the City shall have the right to terminate the Contract.

ARTICLE 26. PROGRESS MEETINGS

26.01 Progress meetings will be held weekly at locations, dates and times selected by the City for the purpose of reviewing, scheduling, and coordinating the Project's progress as well as other matters.

ARTICLE 27. PERMITS

27.01 The Contractor shall keep himself fully informed of all existing and current Municipal, State, or Federal ordinances, regulations or laws in any way limiting or controlling the operations or actions of those engaged in the work or affecting the materials supplied to or by them. The Contractor shall at all times observe and comply with all such valid and binding ordinances, laws or regulations. The Contractor shall protect and indemnify the City and its representatives against any claims arising from, or based upon, any violation of the same.

ARTICLE 28. RIGHT TO USE THE WORK

28.01 The City may enter upon the use of the whole or of any portion of the work, which may be in condition to use, at any time before its issuance of a Notice of Project Acceptance by the City. Such use shall not constitute, or be evidence of, acceptance by the City or by the Project Engineer of the whole or any part of the material furnished, or work performed under the Contract.

ARTICLE 29. PROVISIONS REQUIRED BY LAW

29.01 Each and every provision of law and clause required to be inserted in this Contract shall be deemed to be inserted herein and the Contract shall be read and enforced as though it were included herein. If, through mistake or otherwise, any such provision is not inserted, then, upon application of either party, the Contract shall forthwith be physically amended to make such insertion.

29.02 If this Contract contains any unlawful provisions not an essential part of the general structure of the Contract, and which shall not appear to have been a controlling or material inducement in the making thereof, the same shall be deemed stricken from the Contract without affecting the binding force of the remainder.

ARTICLE 30. WAIVER

30.01 Neither the inspection by the City or Project Engineer or by any of their employees; nor any order, measurement or certificate by the Project Engineer; nor any order by the City for the payment of any money; nor any payment for or acceptance of the whole or any of the work by the Project Engineer for the City; nor any extension of time; nor any possession taken by the City or its employees shall operate as a waiver of any provision of this Contract or of any power herein reserved to the City. Nor shall such action waive any right to damages herein provided. Nor shall any waiver of any breach of the Contract constitute a waiver of any other or subsequent breach. Any remedy provided in this Contract shall be construed as cumulative - i.e. in addition to each and every other remedy herein provided.

ARTICLE 31. USE OF PREMISES AND REMOVAL OF DEBRIS

31.01 The Contractor expressly undertakes at his/her own expense:

1. To take every precaution against injuries to persons or damage to property.
2. To store apparatus, materials, supplies and equipment in such orderly fashion at the site of the work as will not unduly interfere with the progress of the work or the work of any other contractor.
3. To place upon the work or any portion thereof only such loads as are consistent with the safety of that portion of the work.
4. To frequently clean up all refuse, rubbish, scrap materials and debris caused by the Contractor's operations to the end that at all times the site of the work shall present a neat, orderly and work manlike appearance, as well as perform all necessary landscape maintenance and snow removal required for its use of any Project property.
5. To remove all surplus material; falsework; temporary structures including foundations thereof; plant of any description and debris of any nature resulting from the Contractor's operations before Final Completion.
6. To put the site in a neat orderly condition, to remove all clean-up materials, to remove such materials from the construction site, and to deposit them in a refuse disposal site at his/her expense.
7. To effect all cutting, fitting or patching of work required to make the same conform to the Drawings and Specifications and, except with the consent of the City, not to cut or otherwise alter the work of any other contractor.

ARTICLE 32. RIGHT-OF-WAY AND SUSPENSION OF WORK

32.01 Land and rights-of-way for the purposes of this Contract will be furnished by the City to the extent shown on the Drawings. The City will use diligence in acquiring said land and rights-of-way as speedily as possible. However, it is possible that not all land and rights-of-way will be obtained as herein contemplated before construction commences. In such case the Contractor shall begin the work upon such land and rights of-way as the City may have previously acquired. No claim for damages whatsoever will be allowed because of the delay in obtaining the remaining lands and/or rights-of-way. Should the City be prevented or enjoined from proceeding with the work, or from authorizing its prosecution, either before or after the commencement, by reason of litigation or by reason of its inability to procure any lands or rights-of-way for the said work, the Contractor shall not be entitled to withdraw from the Contract because of these occurrences. In the event of any of the above occurrences, the time for completion of the work may be extended in the manner provided elsewhere in the Contract Documents.

ARTICLE 33. CONSTRUCTION EQUIPMENT AND MACHINERY

33.01 The Contractor shall furnish and maintain, at its own cost and risk, all tools, all equipment, apparatus and appliances, hoists and/or cranes and power for same, scaffolding, runways, ladders, temporary supports and bracing and all other similar work or material necessary to insure speed, convenience and safety in the execution of its Contract. All such items shall be subject to approval of the City, upon the Project Engineer's recommendation, as to general stability, type and location, but the responsibility for proper design, strength and safety shall remain with the Contractor. All such items shall comply with OSHA regulations and all other applicable codes, statutes, rules and regulations.

33.02 The Contractor shall provide all drains, drainage, ditches and pumping apparatus (including power and attendance for same) that may be necessary to keep all excavations and sub-grade work free from water.

33.03 All machines, equipment, trucks and vehicles used in the prosecution of the work, or in connection therewith, shall be in proper working condition at all times. Only gasoline, electric, or diesel engines shall be used for the power in operating equipment.

33.04 The Contractor shall be responsible for curtailing noise, smoke, fumes or other nuisances resulting from the operations. The. Contractor shall, upon written notification from the City or Project Engineer, make any repairs, replacements, adjustments or additions and furnish mufflers when necessary to' fulfill requirements. No oil tanks for fueling equipment shall be stored less than one hundred (100) feet from any watercourse.

33.05 All costs involved in complying with the stipulations outlined shall be included in the various prices bid in the proposal.

ARTICLE 34. CONTRACTOR'S GENERAL WARRANTY PERIOD

34.01 The Contractor's General Warranty Period shall commence on the date of issuance of a Notice of Project Acceptance by the City and during such time Contractor shall guarantee his work is free from faulty materials and workmanship.

34.02 Within the Contractor's General Warranty Period, any portion of the Work shall, in the opinion of the City, require repairing, replacing or rebuilding, the Contractor shall start such repairs within five (5) consecutive calendar days after receipt of notice from the City. If the Contractor shall fail to or neglect to start the repairs within five (5) consecutive calendar days, the City may employ such other person or persons as it may deem proper to make such repairs. The City will charge the Contractor the cost thereby incurred. Nothing herein provided shall limit the liability of the Contractor or Surety to the City for non-performance of the Contractor's obligations at any time.

34.03 The Payment and Performance Bonds, and Material Bond, if required, shall remain in full force and effect through the Contractor's General Warranty Period.

34.04 Deficiencies in the Work discovered after the date of the issuance of a Notice of Project Acceptance by the City shall be deemed General Warranty Work. Such deficiencies shall be corrected by Contractor under this Article.

34.05 The Contractor shall remedy any defects due to faulty materials or workmanship within thirty (30) consecutive calendar days of receiving notice thereof by the City. Should the Contractor fail to correct the deficiency within thirty (30) consecutive calendar days, the City may perform the corrective work and Contractor shall be responsible for all reasonable costs incurred by City in performing such correction.

ARTICLE 35. PROCEDURE IN CONSTRUCTION

35.01 The Contractor shall start work and carry it on at such point or points and in such order of precedence and at times and seasons as may be determined by the City. The Contractor shall complete the various portions of the work in accordance with the schedule approved by the City.

35.02 A complete organization, complement of equipment and ample materials shall be on hand before actual work commences. The Contractor shall so arrange his/her organization, plant, equipment and materials so that construction operations will be carried on continuously. The Contractor will not be permitted to reduce the force of workers or remove any equipment from the work if such reduction or removal impairs the progress of the work.

35.03 The Contractor shall remain on the project continuously once work commences and is not permitted to reduce its workforce such that it will negatively impact the project schedule.

35.03 In the event that the City awards more than one contract to the Contractor, the Contractor shall be required to prosecute the work on each contract simultaneously. The Contractor will be required to maintain a separate and independent organization and staff, labor forces and machinery on each contract in order to complete the work within the time set forth for the respective contracts.

ARTICLE 36. APPRENTICES

36.01 Apprentices shall be permitted to work only under a bona fide apprenticeship program registered either with the State Apprenticeship Council or with the Bureau of Apprenticeship, United States Department of Labor.

ARTICLE 37. CONTROL OF WORK

37.01 The Contractor shall abide by all orders, directions and requirements of the Project Engineer in the performance of the work.

37.02 In the event the Contractor is not personally present at the project site, he/she shall have a superintendent present at the site that possesses more than adequate communication skills. The superintendent must have proper knowledge of all applicable project requirements and conditions and must have authority to fully represent the

Contractor with power to act and to be the recipient of orders and to obey all the instructions of the Project Engineer and/or the City. If proper provision for the carrying out of this stipulation is not made, then the Contractor shall be held responsible for the execution of such orders and instructions which the Project Engineer and/or City may deem necessary to issue to any employee regarding the work. The City or Project Engineer may order the work stopped until a duly authorized representative of the Contractor appears and receives instructions. No claims for damages or for an extension time in which to complete the work because of such delay will be allowed the Contractor.

37.03 In all cases, the Project Engineer shall determine classifications, quantities, quality, acceptability and fitness of the several kinds of work that are to be paid for under the Contract. The Project Engineer and/or City shall interpret the Plans and Specifications and any extra work orders and shall determine all questions in relation to said work and to the construction thereof.

37.04 The Contractor shall not employ any plant, equipment, material, methods or workers to which the City objects. The Contractor shall not remove any plant, materials, equipment or other facilities from the site of the work without the City's permission.

ARTICLE 38. CITY'S CONTROL NOT LIMITED

38.01 The enumeration in this Contract of particular instances in which the opinion, judgment, discretion or determination of the City shall control, and in which work shall be performed to the City's satisfaction and approval or inspection, shall not imply that only matters similar to those enumerated shall be so governed. Without exception all the work shall be so governed and performed.

ARTICLE 39. AUTHORITY AND DUTIES OF INSPECTORS

39.01 Inspectors shall be authorized to inspect all work done and all materials furnished. Such inspection may extend to all parts of the work and to the preparation or manufacture of the materials to be used. In the case of any dispute arising between the Contractor and an Inspector as to materials furnished, or as to the manner of performing the work, the Inspector shall have the authority to reject material or to suspend the work until the question at issue can be referred to, and decided by, the City.

39.02 The Inspector shall not be authorized to revoke, enlarge, relax or release any requirements of these Specifications nor to approve or accept any of the provisions of the Contract Documents. The Inspector shall in no case act as a foreman or perform other duties for the Contractor. The Inspector shall not interfere with the management of the work by the Contractor. Any advice, which the Inspector may give the Contractor, shall not be construed as binding on the City or the Project Engineer in any way. Such advice will not release the Contractor from the fulfillment of the terms of the Contract.

ARTICLE 40. INSPECTION AND CORRECTION OF WORK

40.01 All material furnished and work done will be inspected by the Project Engineer. The Project Engineer shall condemn any work or materials not in accordance with the Contract Documents. All condemned work and materials shall be removed and other work and materials furnished in accordance therewith. All materials rejected by the Project Engineer as being unfit for the particular clause in the Specifications to which they refer shall be removed from the site. Removal shall be within twenty-four (24) hours or shorter if the Project Engineer so directs. Should the Contractor refuse to remove the work and materials as ordered, then the Project Engineer may stop the Contractor from proceeding with the work. The City may supply workers and materials to remove the condemned work and materials at the expense of the Contractor.

40.02 Failure on the part of the Project Engineer, or any authorized Inspectors, to detect inferior work or materials, and to condemn the same, shall not be construed to imply an acceptance of such work or materials. Such failure shall not be construed as barring the City, at any subsequent time, from the recovery of such sum of money from the Contractor which may be required to construct or to build anew all portions of the work in which fraud was practiced, improper work executed or improper material furnished and built into the work. The Contractor shall furnish all necessary facilities should it be desirable at any time to make an examination of the work already completed.

40.03 If any work is found defective in any respect, the expense of the examination must be borne by the Contractor. If

all work is found satisfactory, the expense of the examination will be paid for in the manner provided for elsewhere in the Contract Documents. If all work is found satisfactory, the expense of the examination will be paid for in the manner provided elsewhere in the Contract Documents.

40.04 If, in the opinion of the City, it is undesirable to reconstruct or correct any portion of the work injured or not performed in accordance with the Contract Documents, the Contractor's compensation hereunder shall be reduced by such amount as may be equitable under all circumstances.

ARTICLE 41. CONTRACTOR'S OBLIGATIONS

41.01 The Contractor shall and will, in good workmanlike manner, do and perform all work and furnish all supplies and material, machinery, equipment, facilities and means, except as herein otherwise expressly specified, necessary or proper to perform and complete all work required by this Contract. All to be accomplished within the time specified; in accordance with the provisions of this Contract and Specifications; in accordance with the Plans and Drawings pertaining to this Contract; in accordance with any and all supplemental Plans and Specifications and in accordance with the directions of the City as given from time to time during the progress of the work. The Contractor shall furnish, erect, maintain and remove such construction plant and such temporary work as may be required. The Contractor alone shall be responsible for the safety, efficiency and adequacy of the plant, appliances and methods. The Contractor shall be responsible for any damage, which may result from their failure or from their improper construction, maintenance or operation. The Contractor shall observe, comply with and be subject to all terms, conditions, requirements and limitations of the Contract and the Specifications. The Contractor shall do, carry on and complete the entire work to the satisfaction of the City.

41.02 The Contractor shall be solely responsible for all the work and shall provide all precautionary measures necessary for preventing injury to persons or damage to property. All injury or damage, of whatever nature, resulting from the work, or resulting to persons, from whatever cause, shall be the responsibility of, and shall be borne and sustained by, the Contractor. The Contractor shall hold the City and Project Engineer, or their agents, harmless and shall defend and indemnify the City and Project Engineer, or their agents, against damages, or claims for damages, due to injury to .persons or to property arising out of the execution of work and for damages to material furnished for the work; for infringement of inventions, patents and patent rights used in doing the work; for damages arising out of the use of any improper material, equipment or labor used in the work and for any act of omission by any subcontractors therein. The Contractor shall bear all losses including, but not limited to, losses sustained on account of the character, quality or quantity of any part or all of the work, or because the nature of the land in or on which the work is done being different from what may have been estimated or indicated, or on account of the weather, elements or other causes, except for acts beyond the reasonable control of the Contractor.

ARTICLE 42. TOILET ACCOMMODATIONS AND DRINKING WATER

42.01 The Contractor shall provide necessary sanitary toilet accommodations and drinking water for the workers. Separate facilities shall be provided for female workers.

ARTICLE 43. SAFETY AND HEALTH REGULATIONS

43.01 These documents, and the joint and several phase of construction hereby contemplated are to be governed at all times by applicable provisions of the Federal law(s), including, but not limited to, the latest amendments of the following:

1. Williams-Steiger Occupational Safety and Health Act of 1970, Public Law 91-956.
2. Part 1910 - Occupational Safety and Health Standards; Chapter XVII of Title 29, Code of Federal Regulations.
3. Part 1926 - Safety and Health Regulations for Construction, Chapter XVII of Title 29, Code of Federal Regulations.

43.02 This project is subject to all of the Safety and Health Regulations (see 29 CFR 1926m as amended) as promulgated by the U. S. Department of Labor on June 24, 1974. The Contractor shall thoroughly familiarize him/herself with the requirements of these regulations.

ARTICLE 44. OWNERSHIP OF DRAWINGS AND SPECIFICATIONS

44.01 Subsequent to award of the contract, with the exception of the Contractor's executed set, all drawings and specifications are the property of the City. The City shall furnish one (1) paper and one electronic set, in PDF Format, of the construction drawings and specifications to the Contractor without charge. No additional sets will be furnished by the City. Such drawings and specifications are not to be used in other work.

ARTICLE 45. RESIDENTS' PREFERENCE IN WORK ON OTHER PUBLIC FACILITIES

45.01 Except to the extent prohibited by Federal or State statute, the Contractor shall comply with the provisions of Section 31-52a of the General Statutes of the State of Connecticut, Revision of 1967, a part of which is quoted as follows:

Section 2(b) each contract for any such project covered by this section under the supervision of the State or any of its agents shall contain the following provision:

"In the employment of mechanics, laborers or workmen to perform the work specified herein, preference shall be given to residents of the State who are and, continuously for at least six months prior to the date hereof, have been residents of the State, and if no such person is available, then to residents of other states."

ARTICLE 46. LISTING OF EMPLOYMENT OPENING

46.01 This Contract is executed subject to the Governor's Executive Orders No. 3 and No. 17, which are hereby made a part of this agreement. The Governor's Executive Order No, 17 requires, inter alia, that all contractors and subcontractors shall list all employment openings with the office of the Connecticut State Employment Service in the area in which the work is to be performed or where the services are to be rendered. Failure of the Contractor to conform to the requirements of the Governor's Executive Orders No. 3 and No. 17, and any orders, rules, or regulations issued pursuant thereto, shall be a basis for termination of this agreement by the City.

ARTICLE 47. SERVICE OF PROCESS

47.01 The Contractor, if not a resident of the State of Connecticut, or, in the case of a partnership, the partners, if not residents, hereby appoint(s) the Secretary of State of the State of Connecticut, and successors in office, agent for service of process. Such service, as arising out of, or because of, this Contract. Such appointment shall in effect throughout the life of this Contract and for a period of six (6) years thereafter.

ARTICLE 48. CITY OF WATERBURY ORDINANCE CHAPTER 34

48.01 For projects subject to the City's GOOD JOBS ORDINANCE (Code of Ordinances Chapter 34), the provisions thereof are in addition to any requirements of these General Conditions, and to any requirements of all funding sources for the Project, but only to the extent permitted by federal and state law.

ARTICLE 49. WAGE RATES

49.01 The wages paid on an hourly basis to any mechanic, laborer or workman employed upon the work herein, contracted to be done shall be at a rate equal to the rate customary or prevailing for the same work in the same trade or occupation in the City of Waterbury. The amount of payment or contribution paid or payable on behalf of each such employee to any employee welfare fund (as defined in Section 31-53 of the Connecticut General Statutes) shall also be at a rate equal to the rate customary or prevailing for the same work in the same trade or occupation in the City of Waterbury. If the Contractor is not obligated by agreement to make such payment or contribution on behalf of such employees to any such welfare fund, the Contractor shall pay to each employee the amount of payment of contribution for his classification on each payday as part of his wages.

49.02 For Prevailing Wage Rate projects, the Contractor shall furnish to the Project Engineer certified copies of payrolls (the number of, and format of, copies shall be as directed by the Project Engineer showing the names of its employees working on the Project, the specific days and hours and number of hours that each of them has spent in doing so, and the amount paid to each person for said work.

ARTICLE 50. SCHEDULE AND POSTING OF MINIMUM WAGE RATES

50.01 Where applicable, the Contractor, and every subcontractor, shall post a legible copy of the Minimum Wage Rates and Classifications included in the Contract Documents. This posting shall be in a prominent and accessible place at the site of the work (See ARTICLE 49). The schedule shall show all determined minimum wage rates for the various classes of laborers and mechanics to be engaged to work on the project. The schedule shall also show all deductions, if any, required by law to be made from wages actually earned by the laborers and mechanics so engaged.

50.02 The rates established by each schedule are the minimum and all employees shall be paid no less than the established rate for each trade or occupation. In the case of a conflict between schedules in anyone trade or occupation, the higher rate listed shall control and such higher rate shall be considered to be the minimum.

50.03 State: Where applicable, the minimum rates of wages and schedule of supplements to be provided for the various trades shall be in accordance with the Prevailing Wage rate Schedule included herein. The rate of wages and schedule of supplements for any trade not appearing or mentioned in this schedule shall be in accordance with the prevailing rates established for that particular trade by the Connecticut Department of Labor or by the Comptroller or other analogous officer of the City of Waterbury. Minimum wages required to be paid shall include supplements for hospital, surgical, medical or other benefits as determined by all applicable section of the General Statutes of the State of Connecticut. The Contractor shall file a Wage Certification Form with the Labor Department of the State of Connecticut prior to beginning work on the site.

50.04 If for any reason and at any time, the Federal Government, the State of Connecticut, or the City of Waterbury, shall in any way supplement, change or amend the Prevailing Wage Rates Schedule, then the Contractor or subcontractor shall follow such Schedule as supplemented, changed or amended. In no case shall the Contractor or subcontractor be entitled to any additions, compensations or extras because of any supplement, change, amendment or predetermination of the Prevailing Wage Rate Schedule.

50.05 Federal Wage Rates, where applicable, shall be applied in any case where they exceed the State of Connecticut Minimum Wage rates or in any case where a rate has not been established by the State.

ARTICLE 51. COMPUTATION OF WAGES AND OVERTIME COMPENSATION

51.01 The Contractor and each subcontractor shall comply with all applicable Federal, State and local laws or ordinances with respect to the hours worked by laborers and mechanics engaged in work on the project. The Contractor and all subcontractors shall also comply with all applicable Federal, State and local ordinances with respect to compensation for overtime hours worked by laborers and mechanics engaged in work on the project.

ARTICLE 52. WAGE UNDERPAYMENTS AND ADJUSTMENTS

52.01 In addition to any applicable Federal or State regulations, the City may, in the case of underpayment of wages to any worker on the project under this Contract by the Contractor or by any subcontractor, withhold an amount from payments due the Contractor. Said amount to be sufficient to pay such worker the difference between the wages required to be paid the worker under this Contract and the amount actually paid the worker for the total number of hours worked. The City will disburse such amount so withheld by it for, and on behalf of, the Contractor to the employee to whom the amount is due. Such monies withheld pursuant to this article will be in addition to percentages to be retained pursuant to other provisions of the Contract.

ARTICLE 53. CONFORMANCE OF WORK

53.01 The work, during its progress and at its completion, shall conform to the work as shown on the drawings and to the directions given by the Project Engineer from time to time. The work shall be subject to such modifications or additions as the Project Engineer may deem necessary during the execution of the work. In no case will any work be paid for which is performed in excess of such requirements. The work shall also be accomplished in accordance with the Specifications.

ARTICLE 54. DIMENSIONS AND SCHEDULES

54.01 The Contractor will be required to check all dimensions and quantities shown on the drawings or schedules given

to him by the Project Engineer. The Contractor shall notify the Project Engineer of all errors therein which he may discover by examining and checking the same. The Contractor shall not take advantage of any error or omission in these specifications, drawings and schedules. The Project Engineer will furnish all instructions should such error or omission be discovered and the Contractor shall carry out such instructions as if originally specified.

ARTICLE 55. PROTECTION FROM STORM

55.01 Should storm warnings be issued, the Contractor shall take every practicable precaution to minimize danger to persons, to the work and to adjacent property. These precautions shall include closing all openings; removing all loose materials, tools and/or equipment from exposed locations; and removing or securing scaffolding and other temporary work.

55.02 The Contractor shall provide measures to prevent stormwater runoff from entering excavation areas.

ARTICLE 56. PROTECTION OF WORK AND MATERIALS

56.01 The Contractor shall assume full responsibility for the protection of the work and materials during the progress of construction, and until issuance of a Notice of Project Acceptance by the City, against loss or damage by any cause or agency. The Contractor shall, at his own expense, provide efficient means for such protection.

ARTICLE 57. FURTHER SAFEGUARDS

57.01 In case the City or the Project Engineer shall at any time be dissatisfied with the means provided by the Contractor for any aforesaid protection of the work or of any other properties, the City or the Project Engineer may order additional measures and precautions for that purpose. The Contractor, at his own expense, shall immediately comply with such orders and carry them out.

ARTICLE 58. FIRST AID TO INJURED

58.01 The Contractor shall keep on site, ready for immediate use, all articles necessary for giving first aid to injured employees. He shall also provide arrangements for the immediate removal and hospital treatment of any injured employee who may require such treatment.

ARTICLE 59. CONFORMANCE WITH DIRECTIONS

59.01 The Project Engineer may make alterations in the lines, grades, forms, dimensions or materials to be used in the project, or any part thereof, either before or after the commencement of construction. If such alterations diminish the quantity included in any item of work to be done and paid for at a unit price, the Contractor shall have no claim for damages or for anticipated profits on the work thus dispensed with. If the changes increase the quantity included in any such item, such increase shall be paid for at the stipulated unit price.

ARTICLE 60. COMPETENT HELP TO BE EMPLOYED

60.1 The Contractor shall employ an experienced foreman, craftsmen and other workmen competent in the work in which they are to be engaged. All work shall be accomplished by able, skilled and competent personnel. If any person employed on the work by the Contractor shall appear to be incompetent or unreliable in any way, he shall be discharged immediately upon the request of the Project Engineer and shall not be again employed upon the work.

60.2 The contractor shall assign to the project only personnel who are careful and competent. The City may demand the removal of any person employed by the Contractor on the Project who is, in the judgement of the City, guilty of misconduct on the project or incompetent or negligent in the performance of his duties on a City Project or any portion thereof, or who neglects or refuses to comply with direction given by the City in connection with the project. Following such a demand for his/her removal such person shall not work again on the project without the prior written consent of the City. Should the contractor, following such a demand for removal, continue to employ or again employ, such persons, on any City projects without the required consent of the City, the City may withhold all estimated payments that are or may become due to the contractor for this project, or the City

may shutdown this project until the contractor has complied with the City's orders concerning that person. Any such shutdown shall not relieve the Contractor from meeting the Contract Time and no such shutdown shall be considered a Force Majeure event.

60.3 Any employee of the contractor or subcontractor can be terminated or dismissed from the job by the City should that employee be deemed unfit, unruly, hostile, or otherwise disruptive to the project.

ARTICLE 61. STREETS AND SIDEWALKS TO BE KEPT OPEN

61.01 The Contractor shall keep the street and sidewalks in which he may be working open at all times to pedestrian and vehicular traffic. If, in the opinion of the City or the Project Engineer, the interest of abutters and the public requires it, the Contractor shall bridge or construct plank crossings over trenches at street crossings, roads or private ways. The Contractor shall conduct his work for this project in such manner as the City or the Project Engineer may direct from time to time. No sidewalk shall be obstructed where it is possible to avoid it. No additional payment shall be made to the Contractor for such work.

61.02 The Contractor shall provide all necessary fire crossings at principal intersections or ways usually traveled by fire apparatus. The Contractor shall make provision for the passage of fire apparatus to the work area, including along the line of pipeline installations.

61.03 All work shall be conducted in such a manner as to create minimum interference with existing businesses and commercial establishments. Such establishments shall be allowed to conduct business at all times during the construction.

61.04 The Contractor shall be responsible for taking all steps necessary to minimize dust emanating from the project and for keeping the streets free of the accumulation of sand and other similar materials.

ARTICLE 62. LIGHTS, BARRIERS, FENCES, WATCHMEN AND INDEMNITY

62.01 The Contractor shall put up and maintain such barriers, fences, lighting, and warning lights, danger warning signals and signs as will prevent accidents during the construction. The Contractor will protect the work and will insure the safety of the personnel and of the public at all times and places. The Contractor shall defend, indemnify and save harmless the City its agents in every respect from any injury or damage whatsoever caused by any act, omission or neglect of the Contractor or his subcontractors, or their servants or agents. Such indemnification shall also include any claims arising out of failure to erect and maintain sufficient railing or fencing as required by Section 13a-111 of the Connecticut General Statutes. The fact that the City may retain control of the premises, or that the City, or its agents, may take action to erect or maintain railings or fencing shall not relieve the Contractor's obligations hereunder.

62.02 The Contractor shall furnish, maintain and use all necessary safety devices; follow all such safety practices in the prosecution of the work and shall adopt, follow and maintain such additional safety measures as, in the opinion of the Project Engineer, are conducive to safe operation by the Contractor. The Contractor shall cause his subcontractor(s) to also adopt, follow and maintain these measures. All of this shall be done at the Contractor's or subcontractor's own expense. The City shall have the right to order any or all work suspended where, in the opinion of the City, such work is not being carried on in a safe and proper manner or where persons or property are not being properly protected or safeguarded. Such work shall not be resumed until the City's requirements have been met and the City or Project Engineer has directed that work be resumed. Any work so suspended shall be at the Contractor's expense.

62.03 In addition to the above, when as is necessary or when required by the City and/or the Project Engineer, the Contractor shall post signs and shall employ watchmen or flagmen for the direction of the traffic at the site and for excluding unauthorized persons from the site at all times. The Contractor will not be paid additional compensation for this work.

62.04 At all times the Contractor shall be responsible for excluding all persons from land within easement areas and all persons not directly connected with the work or authorized by the City and/or the Project Engineer to be within the project limits.

ARTICLE 63. WORK OUTSIDE REGULAR HOURS

63.01 Night work or work on Saturdays, Sundays or legal holidays requiring the presence of the City, Project Engineer or an Inspector will not be permissible except in the case of emergency and then only upon approval of the Project Engineer. Should it be desired or required for by the City or Project Engineer to operate an organization for continuous night work, the lighting, safety and other facilities that are deemed necessary for performing such night work shall be provided by the Contractor. For night work on Saturdays, Sundays or legal holidays, if any be performed, the Contractor will receive no extra payment. Compensation for such work shall be considered as having been included in the prices stipulated for the appropriate items of work as listed in the bid.

ARTICLE 64. BUS LINE INTERFERENCE

64.01 Whenever it may be necessary to interfere with any bus lines, notice shall be given to the corporation or agency owning the same. A reasonable amount of time shall be given to said organization in order to rearrange their schedule(s) as may be necessary.

ARTICLE 65. COLD WEATHER WORK

65.01 The Project Engineer will determine when low temperature conditions are unfavorable for work and may order the work, or any portions of it, suspended whenever, in his opinion, the conditions are not such as will ensure first class work.

65.02 All methods and materials used in the performance and for the protection of the work in cold weather shall be subject to the approval of the Project Engineer. The Contractor shall take the necessary precautions to protect the work from damage and to remove ice and frost from materials. The removal shall include all necessary heating and the additional removal of any resultant water. The Contractor shall also supply any required sand and/or coarse aggregate required to prevent slipping on ice.

65.03 Except for specific work for which the City has issued a Certificate of Limited Acceptance of the Work, the Contractor shall be responsible for maintaining the project roadways, sidewalks, ramps, driveway aprons and asphalt pathways from the time of contract signing until the issuance of a Notice of Project Acceptance by the City. This responsibility will include snow and ice removal, sanding and mechanical sweeping, and patching with materials approved by the Project Engineer for all roadways, sidewalks, ramps, driveway aprons and asphalt pathways, etc. within the project limits.

65.04 The Contractor shall not continue road excavation after bituminous concrete plants have shut down for the winter. At that time, the Contractor shall request a "winter shutdown". The Contractor shall receive no extra payment for any labor, apparatus, tools or materials necessary to comply with the above requirements, but compensation shall be construed items of work as listed in the bid proposal/form.

ARTICLE 66. BLASTING AND EXPLOSIVES

66.01 No blasting shall be allowed without the Contractor's securing of a permit and permission from the office of the Waterbury Fire Marshall. The Marshall's office is located at 185 South Main Street, Garden Level, (1 Jefferson Square), Waterbury, CT 06702 Phone: (203) 597-3452. The Marshall's office must be advised between 7:00 AM and 10:30 AM of each day's blasting schedule.

66.02 Explosives for blasting shall be stored, handled and used in accordance with the laws, ordinances and regulations of the State of Connecticut; with all local regulations and with such other additional regulations as the City Representative may require. Blasting shall be conducted so as not to endanger people or property. The Contractor shall be responsible for and shall make good any damages of whatever nature caused by blasting or accidental explosions.

66.03 The Contractor shall also adhere to any additional conditions imposed by the Fire Marshall's office. Additionally, the Contractor shall have a pre-blast survey conducted of the adjacent area(s) at no cost to the City.

66.04 Steel or rubber matting shall be used at all blast sites where required by the Bureau of Fire Prevention. Any blast or shot involving more than 99 pounds of explosives must be monitored by the use of seismographs. All seismographs are at the expense of the Contractor. Wire and debris must be cleared from all areas.

66.05 The Contractor shall notify each utility with facilities in proximity to the site of such blasting operations, and any other individuals and entities that may be affected thereby of the Contractor's intention to use explosives; and such notice shall be given sufficiently in advance of any blasting to enable such affected parties to take steps to prevent such blasting from injuring persons or property. Such notice shall not relieve the Contractor of responsibility for damage resulting from its blasting operations.

66.06 Where blasting is required subsequent to commencement of construction, insurance, as required by the City's Risk Manager shall be obtained by the Contractor, and approved by the City's Risk Manager.

ARTICLE 67. TUNNELING

67.01 Tunneling will not be permitted without the express written consent of the City.

ARTICLE 68. RESERVED MATERIALS/EXCAVATED MATERIALS

68.01 Materials excavated from trenches and excavations and those used in the construction of the work shall be deposited in such a manner so that they not endanger persons or the work. Materials shall also be deposited in such a manner that free access may be had at any time to all hydrants and gates near the work. The materials shall be kept trimmed-up so to be of as little inconvenience as possible to public travel or to adjoining tenants. All excavated materials not approved for backfill and/or fill; all surplus material; all rock and all boulders resulting from excavations shall be removed and satisfactorily disposed of off the site by the Contractor at no additional cost to the City.

68.02 Any excavated material not used in the installation of contracted items shall be removed from the site and legally disposed of by the contractor.

ARTICLE 69. OBSTRUCTIONS AND CROSSOVERS

69.01 Whenever any trench or other excavation obstructs pedestrian and/or vehicular traffic in or to any public street, private driveway or property entrance or to private property, the Contractor shall employ such means as may be necessary to maintain pedestrian and vehicular traffic and access. The Contractor shall construct and maintain suitable plank crossings and bridges to carry essential traffic in or to the street, driveway or property in question as specified or as directed. These crossings shall be maintained for as long as it is not expedient to backfill the excavation or until such time as sufficient, supportive backfill may be placed. No additional payment will be made for this work.

69.02 Movement of construction equipment and all other vehicles and loads over and adjacent to any slotted drainpipe shall be done at the Contractor's risk. Any pipe or backfill which becomes damaged or disturbed through any cause shall be replaced or repaired as directed by the City at the expense of the Contractor and at no cost to the State. Suitable temporary crossovers consisting of steel plates or other materials approved by the City shall be employed for a minimum of 7 consecutive calendar days following concrete backfill operations in all areas where vehicular traffic must be maintained or until such time as the pipe installation will withstand loading without damage. All concrete surfaces shall receive a protective coating. End cap installation shall be as recommended by the manufacturer.

ARTICLE 70. DIRECTIONAL SIGNS AND LIGHTS

70.01 Suitable signs, lights and such required items to direct traffic shall be furnished and maintained by the Contractor. No additional payment shall be made for this work.

ARTICLE 71. MAINTENANCE OF WORKPLACE

71.01 The Contractor must keep streets and premises free from unnecessary obstructions, debris and all other materials. The City or Project Engineer may, at any time, order all equipment, materials and surplus from excavations to be removed from the work area. Debris and all other materials lying outside of the working area shall be promptly removed. Should the Contractor fail to remove such material within 24 hours of notice to remove, the City or Project Engineer may cause any or all of said materials to be removed by others. The cost of this removal shall be deducted from any monies, which may be, or may become, due the Contractor under the Contract. In special

cases, the City or Project Engineer may cause such materials to be removed without prior notice.

ARTICLE 72. OPERATIONS AT SEVERAL POINTS

72.01 The Contractor may carry on the work simultaneously at more than on point only if, in the opinion of the City or Project Engineer, such action is acceptable and is necessary to insure completion of the work within the specified time.

72.02 The Contractor‘s Construction Progress Schedule shall be adjusted to provide for work being simultaneously conducted at more than one point (location) at the site or sites.

ARTICLE 73. INTERFERENCE WITH EXISTING STRUCTURES

73.01 Whenever it may be necessary to cross or to interfere with existing culverts, drains, duct banks and conduits, sewers, water pipes or fixtures, guard rails, fences, gas pipes or fixtures or other structures needing special care, due notice shall be given to the City or Project Engineer. Work involving these items shall be done according to the City’s or Project Engineer’s directions. Whenever required, all objects shall be strengthened to meet any additional stress that the work herein specified may impose upon it. Any necessary specialized equipment necessary to perform this work is included at no additional cost to the City. Any damage that may occur shall be thoroughly repaired. If so directed by the City or Project Engineer, the location of any existing work shall be changed to meet the requirements of the proposed work, if necessary, to leave all in good working order. The entire work shall be the responsibility of the Contractor, and the work shall be done at no additional expense to the City 73.02 The Contractor shall be responsible for repairing all broken or damaged mains or utilities, property markers, monitoring wells, and other existing structures to remain, or outside the Limit of Work, during the progress of the Work. The Contractor shall repair and shall be responsible for all damages to existing utilities and structures with no additional expense to the City. The Contractor shall contact the proper utility or authority to correct or make any changes due to utility or other obstructions during the prosecution of the work, but the entire responsibility and expense shall be with the Contractor.

73.03 All damaged items of work or items required to be removed and replaced due to construction shall be replaced or repaired by the Contractor to the complete satisfaction of the City and/or utility at no additional expense to the City.

ARTICLE 74. TURF, TOPSOIL AND OTHER REPLACEMENT ITEMS

74.01 Where the construction runs through cultivated or sodded lands, the Contractor shall stockpile the turf and topsoil separately and replace the same after the excavation is filled. The Contractor shall leave the land as nearly as possible in its original condition. Trees, fences, walls, walks and other items must not be damaged.

ARTICLE 75. MATERIALS

75.01 All materials furnished and used in the completed work shall be new, of best quality, workmanship, and design and shall be recognized as standard in good construction practices. Whenever a specification number or reference is given, the subsequent amendments (if any) shall be included. The standards set forth in the selection of materials and supplies are intended to conform to those standards adopted by the City. Preference in manufacture shall be given to familiarize the Contractor with the requirements of the Project Engineer when the occasion or choice of materials or supplies so demands.

ARTICLE 76. DEFECTIVE MATERIALS

76.01 No materials shall be laid, installed or used which are known to be, or which may be found to be, in any way defective. Notice shall be given to the Project Engineer of any defective or imperfect material. Defective or unfit material found to have been laid, installed or used shall be removed and replaced by the Contractor with unobjectionable material. This removal and replacement shall be made without additional expense to the City.

ARTICLE 77. INSPECTION AND TESTING OF FURNISHED MATERIALS

77.01 Unless herein provided otherwise, all materials furnished by the Contractor are subject to thorough inspections and tests by the Project Engineer. Any materials condemned or rejected by the Project Engineer as not conforming to the specifications may be branded or otherwise marked. Branded or marked material shall be, on demand, at once removed by the Contractor to a satisfactory distance from the site. Removed materials shall not again be brought upon or near to the work.

ARTICLE 78. SAMPLES AND ORDERING LISTS

78.01 Unless herein provided otherwise, the Contractor shall submit samples of the various materials used on the contract as required by the specifications for testing purposes. All ordering lists shall be submitted by the Contractor to the Project Engineer for approval and must be approved before the ordering of the materials.

ARTICLE 79. SANITARY CONVENIENCES

79.01 Adequate sanitary conveniences, properly secluded from public observation, for the use of workmen on the premises shall be provided and maintained by the Contractor in accordance with the requirements of local and State health authorities. These conveniences shall be maintained in such manner and at such points as shall be approved and their use shall be strictly enforced. Sanitary waste shall be treated and disposed of in a manner satisfactory to, and as directed by, the City and/or the local and State health authorities. Under no circumstances shall sanitary waste be allowed to flow on the surface of the ground or in the work area.

79.02 The cost of sanitary conveniences and the maintenance of same will not be paid for separately, but compensation will be considered to be included in the prices stipulated for the items of work listed in the bid form.

ARTICLE 80. FINISHING AND CLEANING UP

80.01 In completing any backfilling operation, the Contractor shall replace all surface material to the satisfaction of the City. The Contractor shall then immediately remove all surplus material, all tools, and other property belonging to him. The Contractor shall leave the entire street or surrounding area free and clean, in good order and at no additional expense to the City. Backfilling and removal of surplus materials shall follow closely upon the completion of the work. The Contractor shall exercise special care in keeping rights-of-way and private and public lands, upon which work is being performed, clean and free of debris at all times. The Contractor will remove tools and other property belonging to him when they are not being used.

80.02 In case the Contractor shall fail or neglect to promptly remove all surplus materials, tools and other incidentals after backfilling, or shall neglect to do required paving promptly, the City or Project Engineer may, after 24 hours' notice, cause the work to be done and the cost thereof shall be deducted form any monies then or thereafter due the Contractor.

ARTICLE 81. RIGHTS OF ACCESS

81.01 Nothing herein contained or shown on the drawings shall be construed as giving the Contractor exclusive occupancy of the work area involved. The City or any other Contractor employed by the City, the various utility companies, contractors or sub-contractors employed by Federal, state or local government agencies involved in the general project or upon public rights-of-way, may enter upon or cross the area of work or occupy portions of it as directed or permitted. When the territory of one contract is the convenient means of access to the other, each contractor shall arrange his work in such manner as to permit such access and to prevent unnecessary delay in the work as a whole. Said access rights shall also include all Federal and state agencies and their representatives that have an interest in said project.

ARTICLE 82. WORK BY OTHERS

82.01 The City reserves the right to do any other work which may connect with, or become a part of, or be adjacent to the work embraced by this Contract, at any time, by contract work or otherwise. The Contractor shall not interfere with, nor obstruct in any way, the work of such other persons as the City may employ. The Contractor

shall execute his own work in such a manner as to aid in the execution of work by others as may be required. No excavations or backfilling will be permitted if other work by the City will be affected.

ARTICLE 83. WORK WITHIN THE LIMITS OF PRIVATE PROPERTY

83.01 Particular attention is hereby directed to the fact that some of the work included under this Contract may have to be done within the limits of properties that are publicly or privately owned. The City, where necessary has, or will have, secured the necessary easements to these properties for construction purposes. The Contractor will be permitted to utilize the areas of the City's easements, subject to all of the conditions and requirements as they may affect the Contractor's operations. The Contractor shall conduct his operations and activities in the performance of the work with all such conditions and requirements as may be imposed by the City or Project Engineer.

83.02 All means and rights of ingress and egress to the work areas and all other areas required for workspace, in addition to the City's easements, shall be the entire responsibility of the Contractor, All costs in connection therewith shall be considered to be included in the prices stipulated for the appropriate items of work as listed in the bid form.

83.03 The Contractor shall neither use nor occupy public or private lands outside the limits of the City's easements and rights-of-way unless written permission from the owner of the public or private lands have first been obtained. Copies of the written agreements shall be submitted to the Project Engineer prior to entering upon such land. The Contractor shall be responsible for cooperating with, and for coordinating the prosecution of, the work of this Contract with the public and private property owner. Any abuse to the lands of the public and private property owner shall be immediately corrected by the Contractor, at the Contractor's expense, to the complete satisfaction of the property owner. The Contractor shall take such precautionary measure, as required by the City, to prevent further nuisances, interference or inconvenience to abutting property owners.

83.04 It shall be the Contractor's full responsibility to be familiar with the limitations imposed upon the work of construction within the various properties of public or private ownership and rights-of-way by existing occupancy or use. The Contractor will be required to make every effort to fully and satisfactorily protect trees, shrubs, lawns, gardens, fences, walks, driveways, structures and all and any other appurtenances of the property owners.

83.05 The Contractor shall provide adequate access to all walks, driveways, yards or structures: shall protect all work by the erection or placement of safety guards or barriers, lights and such other incidentals; and where required, shall construct temporary plank crossings or timbers to permit full use of private facilities at all times. All of these actions are to be performed at no additional expense to the City. All other applicable provisions for control of work within the areas of public travel set forth elsewhere herein shall also apply to work within the limits of private ownership.

83.06 The Contractor shall cooperate with the public and private property owners and shall also contact the City and Project Engineer for additional information regarding the requested (or required) length of time needed as a notice to be given to the public or private property owner before the Contractor enters their property to start the construction. In some cases, a certain time to start the work and a certain limited length of time may be required to complete the work on public and private property owners. Furthermore, the contactor may be required to shut down construction operations as necessary to prevent undo interference with the operation of private and public business within the project area.

83.07 Before proceeding with construction operations, the Contractor shall provide suitable and substantial gates or other approved forms of closing gap devices in every fence within the limits of the owner's easements through which the Contractor intends to move or pass equipment and materials. It is the responsibility of the Contractor to negotiate with the owner of each fence all of that owner's requirements, in addition to those specified above. It shall also be the responsibility of the Contractor to comply with all requirements as specified herein and as agreed to with the owner in a manner satisfactory to the owner.

83.08 No separate payment will be made for the requirements specified under "WORK WITHIN THE LIMITS OF PRIVATE PROPERTY" and all costs in conjunction therewith shall be included in the prices stipulated for the appropriate items of work as listed in the bid form.

ARTICLE 84. LOADING

84.01 No part of the structures involved in this Contract shall be loaded during construction with a load greater than that calculated for the safety of the structure. Should any accidents or damage occur through any violation of this requirement, the Contractor will be held responsible. If necessary, the Contractor shall request, in writing, the allowable loading from the Project Engineer.

ARTICLE 85. COMPLETION OF WORK

85.01 In addition to the specified or described portions, all other work and all materials, equipment and labor of whatever description which are necessary or required to complete the work, or for carrying out the full intent of the drawings and specifications, as interpreted by the Project Engineer, shall be provided by the Contractor. Payment therefore shall be considered as having been included in the prices stipulated for the appropriate items of work as listed in the bid form.

ARTICLE 86. DUST AND SPILLAGE CONTROL

86.01 The Contractor shall exercise every precaution to prevent and to control dust arising out of all construction operations from becoming a nuisance. Water shall be provided and applied as required or as ordered by the Project Engineer for allaying dust conditions. Pavements adjoining excavations shall be kept swept and/or washed clean of excess excavated material wherever and whenever directed. Earth piles adjacent to excavations, earth stockpiles and surfaces of refilled excavations shall be kept moist at all times as directed. No extra payment will be made for providing the dust control measures and for conforming to the requirements specified above. Compensation therefor shall be considered included in the prices stipulated for the appropriate items of work listed in the bid form.

86.02 The Contractor shall take appropriate measures to control the generation of dust from its activities. Water shall be provided and applied as required or as ordered by the Project Engineer for allaying dust conditions.

86.03 All vehicles utilized by the Contractor for delivery or removal of materials shall have appropriate covers to prevent spillage of material during transit.

ARTICLE 87. CARE OF THE WORK

87.01 The Contractor shall be responsible for all damages to persons or property that occur as a result of the Contractor's fault or negligence concerning the prosecution of the work. The Contractor shall also be responsible for the proper care and protection of all material delivered and of all work performed until the issuance of a Notice of Project Acceptance by the City, whether or not the same has been covered by partial payments authorized by the Project Engineer.

ARTICLE 88. EMERGENCY WORK

88.01 The Contractor shall file, with the City Engineer and the Project Engineer, if any, the name and telephone number of a person authorized by him who may be contacted regarding emergency work at the job site that may be required during non-working hours for reasons of public safety. This person shall be readily available and shall have full Authority to deal with any emergency that may occur.

ARTICLE 89. FIRE PREVENTION AND PROTECTION

89.01. All Federal laws (Occupational Safety and Health Act) and all state and municipal rules and regulations with respect to fire prevention, fire-resistant construction and fire protection shall be strictly adhered to by the Contractor. All work and facilities necessary therefore shall be provided and maintained by the Contractor in an approved manner.

89.02. All fire protection equipment (as per 89.01 above) shall be provided by the Contractor for the protection of the contract work including temporary work and adjacent property. Personnel experienced in the operation of the fire

protection equipment and apparatus shall be available whenever work is in progress and at such other times as may be necessary for the safety of the public and of the work.

89.03. Open fires will not be permitted.

ARTICLE 90. PLANIMETER

90.01 For estimating quantities, where the computations of areas by analytic and geometric methods would be comparatively laborious, it is stipulated and agreed that the planimeter shall be considered an instrument of precision adapted to the measurement of such areas, as utilized by an engineer.

ARTICLE 91. SUPERINTENDENCE

91.01 During the entire duration of the project, the Contractor shall employ a competent superintendent in personal charge of the work. The superintendent shall be present during all phases of construction and shall have full authority to act for the Contractor. The superintendent shall be continued in this capacity full time for this project unless (1) the person ceases to be on the Contractor's payroll or (2) the person proves to be unacceptable to the City or Project Engineer. Instructions given to the superintendent and/or supervisory subordinates shall be considered as given to the Contractor. A chain-of-command listing shall be submitted by the Contractor to the City and Project Engineer and shall be adhered to in the temporary absence of the superintendent.

ARTICLE 92. CONTRACT ADMINISTRATION COSTS - OUTSIDE REGULAR HOURS

92.01 The working schedule shall be confined to a five (5) day week ending on Friday. The working day shall be any eight-hour period beginning no earlier than 7:00 AM and ending no later than 7:00 PM. Whenever the Contractor elects to perform work on Saturdays, Sundays or legal holidays observed by the City or to work in excess of the normal working hours stated above, the Contractor shall pay to the City the extra cost incurred by the City due to the increased cost of contract administration. Payment shall include all cost of inspection and administration for such Saturday, Sunday or legal holiday work or for work in excess of the normal working day, which the City is obligated to incur and for the extra expense involved in overtime work resulting from the performance of work on these days.

92.02 No work outside regular hours or overtime work shall be planned or executed without the approval of the City.

ARTICLE 93. DAILY REPORTS

93.01 The Contractor shall submit daily activity reports on an approved form for the duration of the project. The report shall indicate all personnel currently employed on the work, including each trade and every subcontractor; all equipment and whether that equipment was idle for the particular day; a general description of all work accomplished and any authorized extra work (time and material reports shall be submitted on separate forms).

93.02 All daily activity reports shall be signed in the field by the Contractor’s Superintendent and the City’s Inspector. Daily reports cannot be edited after the fact.

ARTICLE 94. MATERIAL AND WORKMANSHIP

94.01 All materials and workmanship incorporated in the work covered by this Contract are to be of the highest grade of their respective kinds for the purpose intended. The Contractor shall furnish to the Project Engineer for approval the name of the manufacturer of machinery and mechanical or other equipment that the Contractor contemplates incorporating in the project together with their respective performance capacities and other pertinent information.

94.02 When required by the Specifications, or when called for by the City or Project Engineer, the Contractor shall furnish the required information for approval of all material that the Contractor contemplates incorporating in the work. Samples of material shall be submitted for approval to the Project Engineer when and as directed. Machinery, equipment and material installed or used without approval shall be at the risk of subsequent rejection.

ARTICLE 95. TEMPORARY WATER SUPPLY

95.01 In the event temporary water supply work is required, it shall be provided in accordance with the requirements of the Waterbury Water Bureau and all local and state health authorities. The Contractor shall provide and maintain facilities for an adequate supply of water suitable for use for construction purposes and for domestic use as required for the work of this Contract. The cost of all work, materials, equipment, appurtenances and accessories necessary for providing supplies of water at the site, including the cost of all water consumed, shall be borne by the Contractor.

95.02 Upon Substantial Completion to the work of this Contract, and before Final Completion of the Project, the Contractor shall remove all temporary piping and appurtenant work used for the temporary water supply.

ARTICLE 96. FITTING AND COORDINATION OF WORK

96.01 The Contractor shall be responsible for the proper fitting of all work and for the coordination of operations of all trades, subcontractors or material suppliers engaged in the work. The Contractor shall be prepared to guarantee to each of his subcontractors the dimensions for which they may require for the fitting of their work to all surrounding work. The Contractor shall do, or shall cause his agents to do, all cutting, fitting, adjusting and patching necessary to make the several parts of the work come together satisfactorily and properly and to fit the work to receive, or to be received by, the work of other contractors.

ARTICLE 97. ARCHEOLOGICAL FINDS

97.01 During the life of this Contract, in the event that any articles such as "charcoal", "bone", "shell", "cultural objects", "fire-cracked stones", "stone flaking material." or any other such related items of historical significance are discovered on the project, the Contractor is required to notify:

(1) The City
(2) Project Engineer or Inspector

ARTICLE 98. EXCAVATIONS NEAR UNDERGROUND UTILITIES

98.01 In conformance with Section 16-345 of the Regulations of the Department of Public Utility Control, the Contractor shall not start any excavation and/or blasting of rock activity without first having ascertained the location of all such utilities in the area. The Contractor shall notify the Public Utilities Regulatory Authority (PURA) "CALL BEFORE YOU DIG" (Toll Free 1- 800-922-4455) at least two (2) full days in advance (excluding Saturday, Sunday and legal holidays), but no more than thirty (30) days before starting any such work. Such notice shall include the name, address and telephone number of the persons/agency performing the work, the date, location and type of excavation.

98.02 The PURA should immediately transmit such information to the utility companies whose facilities may be affected. Utility companies receiving notice should mark-up the locations of their facilities on the work site. If they have no facilities in the area, they shall so inform the Contractor. If the Contractor does not receive any information or marked-up locations on the work sites, the Contractor shall contact PURA again to verify that the utility companies have responded to the initial call. Under no circumstances will the Contractor be allowed to start any excavation and/or blasting work prior to obtaining all necessary information regarding the location of underground utilities at the site. It is the Contractor's responsibility to have all utilities marked on the work sites prior to starting the work.

ARTICLE 99. WATER QUALITY OF WELLS

99.01 The Contractor shall perform all tests required by the State Health Department on all water supply wells and reservoirs where directed by the City or Project Engineer before and after construction. All labor, materials and testing shall be paid by the Contractor at no cost to the City.

ARTICLE 100. WORK IN STATE HIGHWAYS

100.01 If any of the work under this Contract is in a state highway the Contractor shall obtain all required permits at his own expense. The Contractor shall perform the work in accordance with the terms and conditions stipulated by the Connecticut Department of Transportation (ConnDOT) and/or as required by ConnDOT inspectors. The Contractor must provide such bonds, security and insurance as may be required to obtain such permits.

100.02 In the event the City, or the City and the Contractor jointly, are required to obtain any permits, including detour permits, the Contractor shall be familiar with the conditions of the permits and shall be held responsible for compliance with all the requirements of the permits and all specifications attached thereto, as if the permits were held solely by the Contractor.

100.03 Whenever State inspectors, flagmen or other costs are incurred as a condition to obtaining permits, the Contractor shall be responsible for payment of these costs with no reimbursement from the City.

100.04 The Contractor shall conform to all ConnDOT requirements for materials and construction methods for all work within state highways. Sheeting or an adequate trench box may be required in all trenching operations to confine trench widths and to protect State facilities. Additional pavement replacement may be required to properly restore the roadway surface.

100.05 The cost of all labor, materials and equipment necessary to conform to CONNDOT requirements for work in, or adjacent to, state highways, including work not specifically stated in the Contract Plans and Specifications, shall be the sole responsibility of the Contractor and shall not be reimbursed by the City. Therefore, the Contractor is informed to evaluate all CONNDOT requirements for the project prior to submitting the Bid for the project and to include these costs in his bid prices.

ARTICLE 101. EXISTING INSPECTION REPORTS

101.01 Any existing inspection reports concerning the project which have been prepared by or for the City or Project Engineer will be made available for the Contractor's information.

ARTICLE 102. TEST REPORTS; CERTIFICATES OF COMPLIANCE AND SHIPPING LISTS

102.01 Except where expressly provided otherwise in the Contract Documents, the Contractor shall furnish to the Project Engineer the material manufacturer's notarized test reports and methods of testing by an approved independent laboratory in order to show compliance of all materials furnished with all specification requirements, the reports shall also contain manufacturer's notarized certificates of conformance stating that all materials furnished under these Specifications conform with all specification requirements; that each shipment of materials shall be accompanied by the manufacturer's notarized certificate of conformance and that a shipping list itemizing the amounts of each shipment shall accompany each shipment.

ARTICLE 103. CLEANING FINISHED WORK

103.01 After the work is completed, the sewers, manholes and structures shall be carefully cleaned free of dirt, broken masonry, mortar, construction and other debris and shall be left in first class condition, ready for use. All temporary or excess material shall be disposed of and the work left broom-clean to the satisfaction of the Project Engineer.

ARTICLE 104. COMPLIANCE TO ACTS AND EXECUTIVE ORDERS

104.01 If this Contract is federally assisted and the Contractor must comply with all applicable statutes, acts, executive orders and regulations, including without limitation:

(a) **TITLE VI, CIVIL RIGHTS ACT OF 1964** Provides that no person in the United States shall on the grounds of race, color or national origin be excluded from participation in, be denied the benefits of, or be subjected to discrimination under any program or activity, receiving Federal financial assistance.

(b) **SECTION 3, HUD ACT OF 1968** Provides that, to the greatest extent feasible, opportunities for training and employment shall be given to lower income residents of HUD-assisted project areas, and that contracts for work in connection with such projects be awarded to business concerns which are located in, or are owned in substantial part by persons residing in the area of the project.

(c) **LABOR STANDARDS** Compliance with Davis Bacon Act, as amended (40 U.S.C. 267a-5) Contract Work Hours and Safety Standards Act (40 U.S.C. 327-333) 13.0.

ARTICLE 105 SEMI-FINAL INSPECTION/SUBSTANTIAL COMPLETION

105.1 Contractor shall notify the Project Engineer when it believes the work (or a portion thereof) is Substantially Complete and shall file with the City a written, notarized "Contractor's Affidavit of Substantial Completion" and request a Semi-Final Inspection of the work.

105.2 Contractor, prior to requesting Semi-Final Inspection, shall complete and submit the following, listing known exceptions in its Affidavit of Substantial Completion:

i. Include supporting documentation for Substantial Completion as indicated in these Contract Documents.
ii. Include Drafts of all documentation for Final Completion as indicated in these Contract Documents.
iii. Advise City of outstanding permit closure requirements. Submit certificates of inspections conducted, reports, and other documentation required by local or state authorities.
iv. Where required, submit photographs, specific warranties, final certifications, and similar documents.
v. Provide Partial Waiver of Lien from each Subcontractor, supplier and the Contractor. All money due to Subcontractors and suppliers may be withheld from payment to the Contractor until Waivers of Lien indicate no money owed.
vi. Drafts of all required As-Builts, Record Drawings and Documents and Surveys, in number and formats specified.

105.3 Subsequent to City's receipt of Contractor's Affidavit of Substantial Completion, Project Engineer will either proceed with Semi-Final Inspection or advise Contractor of prerequisites not fulfilled.

105.4 Following Semi-Final Inspection, Project Engineer will either inform the City to prepare a Certificate of Substantial Completion, or advise Contractor of work that must be performed prior to issuance of said certificate, and repeat the inspection when requested and assured that the work has been substantially completed in accordance with the Contract Documents.

105.5 Contractor shall submit its **Semi-Final Payment Application** coincident with, or first following the date claimed as Substantially Complete, which shall be processed in the same manner as a partial payment requisition and shall show either 100% completion for the work claimed as Substantially Complete, and/or list incomplete items, value of incompletion, and reasons for being incomplete.

ARTICLE 106. CITY'S CERTIFICATE OF SUBSTANTIAL COMPLETION

106.1 For the portion of the work determined to be Substantially Complete, the City shall issue "City's Certificate of Substantial Completion" which shall establish the date of Substantial Completion by the Contractor.

106.2 Concurrently, the Project Engineer shall prepare a list (the "punchlist") of remaining items of work to be completed and/or deficiencies to be addressed.

106.3 The City reserves the right to modify, amend and/or update the "punchlist," as it deems necessary.

ARTICLE 107. LIMITED ACCEPTANCE OF WORK

107.01 Limited Acceptance of Portion(s) of the Work shall be at City's sole discretion and shall be subsequent to issuance of City's Certificate of Substantial Completion for such work and shall relieve Contractor of responsibility for the physical aspects of said portion of the work; however such termination of responsibility for the physical aspects of the work in no way affects or diminishes any other contractual requirements governing the work so accepted, or the issuance of a Notice of Project Acceptance of the Project as whole.

107.02 Documentation of any Limited Acceptance of Portion(s) of the Work shall be evidenced by City's issuance of a

Certificate of Limited Acceptance of Work for such Work.

ARTICLE 108. FINAL INSPECTION

108.01 Contractor shall notify the Project Engineer when it believes the Project is Finally Complete and shall file with the City a written, notarized "Contractor's Affidavit of Final Completion" and request a Final Inspection of the work by the Project Engineer.

108.02 Subsequent to receipt of Contractor's Affidavit of Final Completion, Project Engineer will either proceed with Final Inspection and/or advise Contractor of prerequisites not fulfilled.

108.03 At the time of submission of its Affidavit of Final Completion, Contractor, as required by the Contract Documents and/or required for completion of the Project as determined by the City, shall also provide and/or submit the following:

i. Supporting documentation required by the Contract Documents not previously submitted and accepted.
ii. Discontinue and remove, as appropriate, temporary facilities and services, along with construction tools and facilities, and similar elements.
iii. A copy of City's final punch list of itemized work to be completed or corrected, stating that each item has been completed or otherwise resolved for acceptance, endorsed and dated by the Project Engineer.
iv. Final and complete versions of all required As-Builts, Record Drawings and Documents and Surveys, in number and formats specified.
v. Provide Final Waiver of Lien from each Subcontractor, supplier and the Contractor. All money due to Subcontractors and suppliers shall be withheld from payment to the Contractor until Waivers of Lien indicate no money owed.
vi. Evidence of final, continuing insurance coverage complying with insurance requirements, including certificates of insurance for products and completed operations where required.
vii. Reports and forms required by Federal and/or State funding sources, as required thereby.
viii. Any final documents requested by the City
ix. If applicable, submit final liquidated damages settlement statement, acceptable to City.
x. Photographs, specific warranties, final certifications, and similar documents.

108.04 Following Final Inspection, Project Engineer will either inform and advise the City to prepare the City's Certificate of Final Completion" or advise Contractor of work that must still be performed prior to the issuance of said certificate and repeat the inspection when requested and assured that the work has been finally completed in accordance with the Contract Documents.

108.05 If, following final inspection, the work is not determined to be Finally Complete, the City Representative will advise the Contractor accordingly, in writing, and the process will be repeated when Final Inspection is again requested by Contractor.

108.06 Upon determination that the work is Finally Complete, the City shall issue the "City's Certificate of Final Completion" that shall establish the date of Final Completion by the Contractor.

ARTICLE 109. FINAL CHANGE ORDER

109.01 Upon determination that Final Completion has been reached, the City shall, if necessary, prepare a **Final Change Order.** The "**Final Change Order"** shall show the total due Contractor under the Contract, including a final estimate of all quantities. Should there be a decrease in quantities, then such variations will be computed at the unit prices in the bid/proposal form and reflected in the **Final Change Order** by adding or deducting said amounts from the from the gross sum, as applicable.

109.02 The **Final Change Order** shall reflect the final Contract Amount, all prior City payments to the Contractor, all adjustments to the Contract Amount, all retainage held by the City, any liquidated damage amounts, all unused amounts of any Owner Controlled Allowances and of all Cash Allowances, all adjustments for Alternates accepted/declined by the City and final amount of any holdback(s) by the City.

109.03 All certificates of payments and estimates, upon which partial payments may have been made being merely estimates, shall be subject to correction by this **Final Change Order**.

109.04 Contractor shall execute the Final Change Order upon issuance by the City.

109.05 All Contractor's subsequent payment requisitions shall reflect the amounts and qualities set forth in the Final Change Order.

ARTICLE 110. FINAL PAYMENT APPLICATION

110.01 Based upon the amounts and qualities set forth in the Contract Documents, as may be revised by the Final Change Order, the Contractor shall submit its Final Payment Application requesting Final Payment due under the Contract, including all retainage held by the City.

110.02 All prior estimates and City payments, including those relating to extra or additional work, retainage(s), and holdback(s), shall be subject to correction by this Final Payment.

110.02 This Final Payment Application shall be certified as to its correctness by the Project Engineer and will be processed in the same manner as the partial payment requests.

ARTICLE 111. FINAL COMPLETION / CITY'S CERTIFICATE OF FINAL COMPLETION / NOTICE OF PROJECT ACCEPTANCE

111.01 Final Completion and Project Acceptance shall occur when:

i. Contractor has completed all of the Work, including punch list items, in accordance with all requirements of the Contract as approved by the City and/or its Project Engineer and it has provided City with a Certificate of Completion that it has completed the Work and performed all other obligations as required under the Contract through the date of its final estimate for payment;.
ii. Any conditions precedent in the Owner Contract to Contractor's entitlement to final payment have been satisfied, including Contractor providing a duly executed "Final Lien/Bond Waiver, Release and Indemnity Agreement" (Note: The City may require a final waiver and release of liens and claims from subcontractors);
iii. Reports and forms required on all Federal Aid Projects;
iv. Contractor has provided City all as-built drawings, certifications, maintenance manuals, operating instructions, statement of estimates, reports and other final submittals; software; written guarantees and warranties; and bonds required to be provided by Contractor under the Contract; and start-up support required by the Contract has been completed;
v. After Final Inspection has been held, all required additional work and final cleaning-up have been completed, and all the Contractor's equipment and construction signs have been removed from the Project site;
vi. Contractor's Final Payment Application has been submitted, certified as to correctness by the Project Engineer, and submitted for processing;
vii. Contractor's surety, if any, has consented in writing to the making of final payment;
viii. Contractor has provided City with a statement that it has paid all federal, state, county and municipal taxes, duties and other amounts imposed by applicable law upon any labor, services, equipment, materials, supplies or other items acquired, performed, furnished or used in connection with Contractor's performance of the Work, including, but not limited to, sales, use, gross receipts, excise, unemployment, and personal property taxes;
ix. Upon written determination by Project Engineer that items a and b are complete, the City shall issue its Certificate of Final Completion and Notice of Project Acceptance to Contractor, establishing therein the date of Final Completion; and
x. Subsequent to Final Acceptance of the Project, the Project Engineer shall prepare a Final Estimate which shall state the final Contract amount, any liquidated damage amounts, all City payments to Contractor, the final amount of any holdback(s) by the City, plus any other credits from Contractor to the City as well as retainage to be released to Contractor with Final Payment. The Final Estimate shall be signed by the Contractor and by the Project Engineer

ARTICLE 112. ACCEPTANCE OF FINAL PAYMENT

112.01 The acceptance by the Contractor, or by anyone claiming by or through the Contractor, of Final Payment shall constitute and operate as a release for the City from any and all claims of any liability to the Contractor for anything, theretofore done or furnished for or relating to or arising out of the work done thereunder, and for any prior act of neglect, default on the part of the City or any of its officers, agents, or employees unless the Contactor serves a detailed and verified statement of claim upon the City not later than forty (40) consecutive calendar days after mailing of such Final Payment. Such statement shall specify the items claimed. Should the Contractor refuse to accept the Final Payment as tendered, it shall constitute a waiver of any right of

interest thereon.

ARTICLE 113. 10-HOUR OSHA CONSTRUCTION SAFETY AND HEALTH COURSE

113.01 The Contractor, or any subcontractors working on the project, shall provide written proof that any and all employees working on the project job site have successfully completed the 10-Hour OSHA Construction Safety and Health Course.

END OF SECTION

Waterbury Board of Education

THE CITY OF WATERBURY 236 Grand Street | Waterbury, CT 06702 203-574-8009

Elizabeth C. Brown
President

October 8, 2026

Honorable Board of Aldermen
c/o City Clerk
City of Waterbury
235 Grand Street
Waterbury, CT 06702

Ladies and Gentlemen:

We request your review and approval, subject to the Board of Education's anticipated approval at its rescheduled regular meeting of October 8, 2026, of a Professional Services Agreement with Waterbury Bridge to Success Partnership, Inc., in the not to exceed amount of $185,310.00, for Onsite Before and After School Support to implement its BOOST Community School Initiative.

Respectfully,

Carrie A. Swain, Clerk
Waterbury Board of Education

Anthony F. Brooks
Assistant Superintendent of Schools
Waterbury Public Schools
236 Grand St.
Waterbury, CT 06702
(203) 755-3626
anthony.brooks@waterbury.k12.ct.us

Date: September 28, 2026
To: Waterbury Board of Education
From: Anthony F. Brooks, Assistant Superintendent
Subject: Contract with Waterbury Bridge to Success Partnership, Inc. for the BOOST Community Schools Initiative

The Education Department respectfully requests your review and approval of a sole source contract with Waterbury Bridge to Success Partnership, Inc. (BTS) to provide community school coordination and wraparound implementation services for the 2026–2027 BOOST Community Schools Initiative. BTS is uniquely qualified as the sole entity and grantee in Waterbury capable of delivering the Full-Service Community Schools Model, having
co-created and operated the BOOST framework in partnership with Waterbury Public Schools since 2016. This contract is for a one-year term spanning the 2026–2027 school year (July 1, 2026 – June 30, 2027) at a cost of $185,310.00, and is funded through Title I.

Under this agreement, BTS will deliver comprehensive community school implementation and direct support services across designated school sites, including:

- **On-Site Coordination & Support:** Serving as points of contact for students, guardians, program participants, and community members to connect them with programming, services, and resources.
- **School & Family Alignment:** Coordinating regularly with school administration, teachers, staff, and school-based Parent Liaisons to align strategies, and support student attendance, behavior, and academic success.
- **Wraparound Program Implementation:** Conducting school-level needs assessments, developing annual Community School Action Plans, and coordinating academic enrichment (before, during, and after school), social-emotional health supports, and family engagement/capacity-building workshops.
- **Partnership Development & Evaluation:** Formalizing partnerships with local non-profits, businesses, and service agencies to expand support services while tracking key performance indicators and delivering quarterly and annual evaluation reports.

Sincerely,

Anthony F. Brooks
Assistant Superintendent

PROFESSIONAL SERVICES AGREEMENT
For
Onsite Before and After School Support

between
The City of Waterbury, Connecticut
and
Waterbury Bridge to Success Partnership, Inc.

THIS AGREEMENT, effective on the date signed by the Mayor ("Effective Date"), is by and between the CITY OF WATERBURY, (the "City"), located at City Hall, 235 Grand Street, Waterbury, Connecticut 06702 and Bridge to Success Partnership, Inc. (the "Consultant"), a State of Connecticut duly registered domestic corporation, with a principal place of business located at 83 Prospect Street, Waterbury, CT 06702 (Jointly referred to as the "Parties" to this Agreement).

WHEREAS, the City is a recipient of a Federal Grant under Title 1, Part A of the Elementary and Secondary Education Act as amended; and

WHEREAS, the Consultant submitted a proposal to the City to implement its BOOST Community Schools Initiative at Duggan, Gilmartin, Wendell Cross, Roberto Clemente, and Reed schools;

WHEREAS, the City desires to obtain the Consultant's services pursuant to the terms, conditions and provisions set forth in this agreement (the "Project").

NOW THEREFORE, THE PARTIES AGREE AND COVENANT AS FOLLOWS:

1. Scope of Services. The Consultant shall furnish all of the labor, services, equipment, materials, reports, plans, specifications, deliverables, incidentals, etc. necessary to complete the Project as specified in this agreement (also referred to herein as "Contract") and such shall be completed in a satisfactory manner, as reasonably determined by the City. All labor, services, equipment, materials, reports, plans, specifications, deliverables, incidentals, etc. shall comply with any and all applicable Local, State and Federal laws, statutes, ordinances and regulations and with generally accepted professional standards. The Consultant shall make such revisions or modifications to its work, at its own cost and expense, as the City may require in order to be deemed complete.

1.1. The Project consists of, and Consultant shall provide six (6) full-time BOOST Community School Site Coordinators at Duggan, Gilmartin, Wendell Cross, Roberto Clemente and Reed schools including one identified to support family and caregivers, conduct needs assessments, implement comprehensive academic enrichment, before, during and after school, including social, emotional and

behavioral health services, formalize partnerships with local agencies and organizations to support the school and district improvement plans and to track and report progress, and as further detailed and described in **Attachment A** and are hereby made material provisions of this Contract. **Attachment A** shall consist of the following, which are attached hereto, are acknowledged by the Consultant as having been received, or are otherwise hereby incorporated by reference as noted below, and all are made a part hereof:

1.1.1 Sole source letter, dated August 26, 2026, consisting of 1 page, attached hereto;
1.1.2 Consultant's Cost Schedule, entitled "Boost Community Schools Budget SY 26-27," consisting of 1 page, attached hereto;
1.1.3 Consultant's Proposal, entitled "Scope of Work – Sole Source Community Schools Initiative," consisting of 7 pages, attached hereto;
1.1.4 Annual Statement of Financial Interests; Disclosure and Affidavit Re: Outstanding Obligations to the City; Debarment Certification; Corporate Resolution, Non-Collusive affidavit, as provided and executed by Consultant, incorporated herein by reference;
1.1.5 Certificates of Insurance, incorporated herein by reference;
1.1.6 Licenses, incorporated herein by reference;
1.1.7 All applicable Federal, State and local statutes, regulations charter and ordnances, incorporated herein by reference

1.2. The entirety of **Attachment A** plus this executed instrument are together deemed the Contract Documents (hereinafter collectively referred to as "Contract Documents"). The City's record copy of the Contract Documents shall control and shall be effective and binding on the Consultant. In the event that any provision in the Contract Documents conflict with any other provision therein, the provision in the component part of the Contract Document first enumerated below shall govern over any other component part which follows it numerically:

1.2.1 Federal, State and local laws, regulations, charter and ordinances
1.2.2 Any Contract Amendment(s)
1.2.3 This Contract
1.2.4 Consultant's Cost Schedule, entitled "Boost Community Schools Budget SY 26-27, consisting of 1 page
1.2.5 Consultant's Proposal, entitled "Scope of Work – Sole Source Community Schools Initiative," consisting of 7 pages, attached hereto

2. Consultant Representations Regarding Qualification and Accreditation. The Consultant represents that, to the extent required by law, its employees are licensed to perform the scope of work set forth in this Contract. The Consultant further represents that its employees have the requisite skill, expertise and knowledge necessary to perform the scope of work required under the terms of this Contract, including any supplementary work and the City relies upon these.

2.1. Representations Regarding Personnel. The Consultant represents that it has,

or will secure at its own expense, all personnel required to perform the services under this Contract. Such personnel shall not be employees of or have any contractual relationship with the City, unless use of City employees or of personnel having a contractual relationship with the City is approved by the City in writing. As set forth above, all the services required hereunder shall be performed by the Consultant under its supervision and all personnel engaged in the work shall be fully qualified and shall be authorized or permitted under state or local law to perform such services.

2.2. Representations Regarding Qualifications. The Consultant hereby represents that, to the extent required by Federal, State and Local statutes, regulations, codes, ordinances, and policies, that the Consultant and/or its employees be licensed, certified, registered, or otherwise qualified, the Consultant and all employees providing services under this Contract, are in full compliance with those statutes, regulations and ordinances. Upon City request, the Consultant shall provide to the City a copy of the Consultant's licenses, certifications, registrations, etc.

2.3. Activities, Work, and Services Performed in Department of Education Facilities, on School Grounds, at Student Sporting Events, and/or where City Students Present. For all activities in school facilities and/or Department of Education facilities, the Consultant shall first be required to coordinate all on-site visits and activities with the appropriate Department/personnel in Education, or the designated person and shall obtain any necessary clearance, ID badges, etc. Consultant shall enter and exit all school facilities and Department of Educational facilities as designated and authorized by the appropriate Department/personnel in Education, or the designated person.

2.4. Criminal Background Check and DCF Registry Check. The Consultant shall comply with the requirements of C.G.S. 10-222 c (g) and shall ensure, and represents to the City, that any employee who will be on school grounds/Department of Education Property/at Department of Education events and/or where City Students may be present, that will or may have direct contact with Students while providing services pursuant to this Agreement has stated, in writing, whether such person has ever been convicted of a crime or whether criminal charges were ever pending against such person. The Consultant shall further ensure, and represents to the City that any person who will have direct contact with a Student has submitted to a records check of the Department of Children and Families child abuse and neglect registry established pursuant to Conn. Gen. Stat. §17a-101k, as well as state and national criminal history records checks conducted in accordance with Conn. Gen. Stat. §29-17a, the federal National Child Protection Act of 1993, and the federal Volunteers for Children Act of 1998. The Consultant shall not permit any person with a disqualifying criminal history to have direct contact with a student. The Consultant agrees the "direct contact" shall include the Consultant and its employees providing services under this contract if said services are performed on school grounds/Department of Education Property/at Department of Education events and/or where City students are present.

2.5. Activities, Work, and Services Performed on other City Property (Non-Education facilities). For all activities involving non-Board of Education facilities and/or

buildings, Consultant shall first be required to coordinate all on-site visits and activities with the appropriate City Department or its designee.

2.6. Confidentiality/FERPA. Consultant shall strictly adhere to all State and Federal Statutes, rules, policy, regulations, codes of participant protection and confidentiality, administrative directives of the State of Connecticut Board of Education, Connecticut Department of Education and the Waterbury Board of Education regarding confidentiality of student records, files, PPTs, IEPs, etc. Consultant shall further ensure that its employees, agents, or anyone performing work on their behalf under the terms of this Agreement shall strictly adhere to all State and Federal Statutes, rules, policy, regulations, codes of participant protection and confidentiality, administrative directives of the State of Connecticut Board of Education and those of the Waterbury Board of Education regarding confidentiality of student records, files, PPTs, IEPs, etc.

2.6.1 Any and all materials contained in City of Waterbury student files that are entrusted to Consultant or gathered by Consultant in the course of its services shall remain in the strictest confidence to prevent disclosure of the same. All information furnished by the City or gathered by Consultant shall be used solely for the purposes of providing services under this Agreement.

2.6.2 Consultant acknowledges that in the course of providing services under this Agreement, it may come into the possession of education records of City Waterbury students as defined in and governed by Family Educational Rights and Privacy Act ("FERPA", 20 U.S.C. § 1232g) and related regulations (34 C.F.R. § 99) Consultant and City shall comply with the requirements of said statute and regulations, as amended from time to time and Consultant agrees to use information obtained from the City or student education records only for the purposes provided in this Agreement. Without the prior written consent of the student's parent or guardian, as required by FERPA, Consultant has no authority to make disclosures of any information from education records. Consultant shall instruct its employees of their obligations to comply with FERPA.

2.7 Student Data Requirements.

2.7.1 All student records, student information, and student-generated content (collectively, "Student Data") provided or accessed pursuant this Agreement are not the property of, or under the control of, the Consultant.

2.7.2 The City's Board of Education ("Board") shall have access to and the ability to delete Student Data in the possession of the Consultant except in instances where such data is (A) otherwise prohibited from deletion or required to be retained under state or federal law, or (B) stored as a copy as part of a disaster recovery storage system and that is (I) inaccessible to the public, and (ii) unable to be used in the normal course of business by the Consultant. The Board may request the deletion of any such student information, student records or student generated content if such copy has been used by the operator to repopulate accessible data following a

disaster recovery. The Board may request the deletion of Student Data by the Consultant within two (2) business days of receiving such a request and provide to the Board confirmation via electronic mail that the Student Data has been deleted in accordance with the request, the date of its deletion, and the manner in which it has been deleted. The confirmation shall contain a written assurance from the Consultant that proper disposal of the data has occurred in order to prevent the unauthorized access or use of Student Data and that deletion has occurred in accordance with industry standards/practices/protocols.

2.7.3 The Consultant shall not use Student Data for any purposes other than those authorized pursuant to this Agreement.

2.7.4 A student, parent or legal guardian of a student may review personally identifiable information contained in Student Data and correct any erroneous information, if any, in such Student Data. If the Consultant receives a request to review Student Data in the Consultant's possession directly from a student, parent, or guardian, the Consultant agrees to refer that individual to the Board and to notify the Board within two (2) business days of receiving such a request. The Consultant agrees to work cooperatively with the Board to permit a student, parent, or guardian to review personally identifiable information in Student Data that has been shared with the Consultant, and correct any erroneous information therein.

2.7.5 The Consultant shall take actions designed to ensure the security and confidentiality of student data.

2.7.6 The Consultant will notify the Board, in accordance with Conn. Gen. Stat. § 10-234dd, when there has been an unauthorized release, disclosure or acquisition of Student Data. Such notification will include the following steps:

> Upon discovery by the Consultant of a breach of Student Data, the Consultant shall conduct an investigation and restore the integrity of its data systems and, without unreasonable delay, but not more than thirty (30) days after such discovery, shall provide the Board with a more detailed notice of the breach, including but not limited to the date and time of the breach; name(s) of the student{s) whose student data was released, disclosed or acquired; nature of and extent of the breach; and measures taken to ensure that such a breach does not occur in the future.

2.7.7 Student Data shall not be retained or available to the Consultant upon expiration of the Agreement between the Consultant and City, except a student, parent or legal guardian of a student may choose independently to establish or maintain an electronic account with the Consultant after the expiration of such Agreement for the purpose of storing student- generated content.

3.3. Cleaning Up. To the extent the Consultant is required to be on City property to render its services hereunder, the Consultant shall at all times keep the Premises free from accumulation of waste materials or rubbish caused by Consultant, its employees or subcontractors, and at the completion of the work shall remove all rubbish from and about the Project and all tools, scaffolding and surplus materials and shall leave the Premises "broom clean" or its equivalent, unless more exactly specified. In case of dispute, the City may remove the rubbish and charge the cost to the Consultant.

3.4. Publicity. Consultant agrees not to deliberately disclose the fact that the City has entered into or terminated this Contract or disclose any of the terms of the Contract or use the City's name in connection with any publicity, unless the City gives prior written consent to such use of the City's name in each instance.

3.5. Standard of Performance. All workmanship, services, materials or equipment, either at the Premises or intended for it, shall conform in all respects with the requirements of all this Contract, and shall be the best obtainable from the crafts and trades. In all cases, the services, materials, equipment, reports, plans, specifications, deliverables, workmanship, etc. shall be equal to or better than the grade specified, and the best of their kind that is obtainable for the purpose for which they are intended. The standard of care and skill for all services performed by the Consultant shall be that standard of care and skill ordinarily used by other members of the Consultant's profession practicing under the same or similar conditions at the same time and in the same locality. The Consultant's services rendered hereunder shall be rendered completely and by qualified personnel in accordance with standard industry practice.

3.6. Consultant's Employees. The Consultant shall at all times enforce strict discipline and good order among its employees, and shall not employ any unfit person or anyone not skilled in the work assigned.

3.7. Due Diligence Obligation. The Consultant acknowledges its responsibilities to examine and to be thoroughly familiar with the City's proposal document, including, but not limited to the specifications, and any addenda thereto. The Consultant hereby warrants and represents that prior to the submission of its proposal during the proposal process it reviewed or was afforded opportunity, by the City, to review all physical items, facilities, services or functions essential to the satisfactory performance of the services required ("Due Diligence") and thereby certifies that all such items facilities, services or functions are included in this Contract and thereby warrants that:

3.7.1 it conducted or had opportunity to conduct all Due Diligence prior to the submission of its proposal and, accordingly, any additional costs, services or products resulting from the failure of the Consultant to complete Due Diligence prior to submission of its proposal shall be borne by the Consultant. Furthermore the Consultant had the opportunity during the proposal process to ask questions it saw fit and to review the responses from the City;

3.7.2 its failure or omission to make investigation and verification of data shall, in no way, be cause for future claim of ignorance of such data or conditions nor shall such failure to investigate and verify be the basis for any claim whatsoever, monetary or otherwise;

3.7.3 it is solely responsible for resolving any issues resulting from the failure to conduct Due Diligence and shall assume any costs that may result during the implementation of the Project, including, but not limited to, adherence to specifications and pricing for the Project.

3.7.4 it was responsible for specifying any changes and disclosing any new costs prior to the submittal of its proposal. Thus, in the event any changes or costs are disclosed by the Consultant, or otherwise required, during the performance of its services, the sole responsibility for any modification, delay and cost of such changes shall reside with the Consultant.

3.7.5 has familiarized itself with the nature and extent of the Contract Documents, Work, locality, and with all local conditions and Federal, State and Local laws, ordinances, rules and regulations that in any manner may affect cost, progress or performance of the Work;

3.7.6 has given the City written notice of any conflict, error or discrepancy that the Consultant has discovered in the Proposal Documents; and

3.7.7 agrees that the Proposal Documents are sufficient in scope and detail to indicate and convey understanding of all terms and conditions for performance of the Work.

3.8. Reporting Requirement. The Consultant shall deliver periodic reports as may be required by Title 1 Grant requirements and quarterly and annual written performance reports to the City's Using Agency setting forth **(i)** the issue date of the report, **(ii)** the time period covered by the report, **(iii)** a brief description of the work and services completed by the Consultant and/or delivered by the Consultant during the time period covered by the report, **(iv)** expressed as a percentage of the total work and services required under this Contract, the percentage of the total work represented by the work and services described in subsection iii above, **(v)** expressed as a percentage of this Contract's Section 6 total compensation, the percentage of the total compensation represented by the work and services described in subsection iii above, **(vi)** the Consultant's declaration as to whether the entirety of the Consultant's work and services required in this Contract will be, or will not be, completed within the Contract's Section 6 total compensation amount, and **(vii)** any and all additional useful and/or relevant information.

NOTE: the Consultant's failure to deliver any report required herein shall be deemed a material breach of this Contract, the City hereby reserving the right to exercise all available legal remedy(ies) to address said breach.

4. Responsibilities of the City. Upon the City's receipt of Consultant's written request, the City will provide the Consultant with all documents, data and other materials the City agrees are necessary and appropriate to the service to be performed by the Consultant hereunder and the City will endeavor to secure, where feasible and where the City agrees it is necessary and appropriate, materials or information from other sources requested by the Consultant for the purpose of carrying out the services under this Contract.

5. Contract Time. The initial contract term shall be for one (1) year, commencing on the date of mayoral execution and terminating on June 30, 2027 ("Initial Term").

5.1 Time is and shall be of the essence for all Project milestones, completion date for the Project. The Consultant further agrees that the Work shall be prosecuted regularly, diligently and uninterruptedly and at such rate of progress as will insure full completion thereof within the Contract time stated above. It is expressly understood and agreed, by and between the Consultant and City, that the Contract Time is reasonable for the completion of the Work. The Consultant shall be subject to City imposed fines and/or penalties in the event the Consultant breaches the foregoing dates.

6. Compensation. The City shall compensate the Consultant for satisfactory provision of all of the goods and services set forth in this Contract as follows in this Section 6.

6.1 Fee Schedule. The fee payable to the Consultant shall not exceed **ONE HUNDRED EIGHTY FIVE THOUSAND THREE HUNDRED TEN AND 00/100 CENTS ($185,310.00)** for the Initial Term and be in accordance with the Consultant's schedule, entitled "Boost Community Schools Budget SY 26-27."

6.2. Limitation of Payment. Compensation payable to the Consultant is limited to those fees set forth in Section 6.1. above. Such compensation shall be paid by the City upon review and approval of the Consultant's invoices for payment and review of the work, services, deliverables, etc. required in this Contract and review as may be further required by the Charter and Ordinances of the City. Consultant's invoices shall describe the work, services, reports, plans, specifications, deliverables, etc. rendered and the compensation sought therefore in a form and with detail and clarity acceptable to the City.

6.2.1 The Consultant and its affiliates are hereby provided with notice that the City reserves the right, in the City's sole discretion, to offset, withhold, or otherwise reduce City payment(s) to the Consultant in an amount equaling the sum or sums of money the Consultant and/or its affiliates is/are, or becomes delinquent or in arrears on, regarding the Consultant's and/or its affiliate's real and personal tax obligations to the City.

6.3. Review of Work. The Consultant shall permit the City to review, at any time, all work performed under the terms of this Contract at any stage of the work. The

Consultant shall maintain or cause to be maintained all records, books or other documents relative to charges, costs, expenses, fees, alleged breaches of the Contract, settlement of claims or any other matter pertaining to the Consultant's demand for payment. The City shall not certify fees for payment to the Consultant until the City has determined that the Consultant has completed the work in accordance with the requirements of this Contract.

6.4. Proposal Costs. All costs of the Consultant in preparing its proposal shall be solely borne by the Consultant and are not included in the compensation to be paid by the City to the Consultant under this Contract or any other Contract.

6.5. Payment for Services, Materials, Employees. The Consultant shall be fully and solely responsible for the suitability, and compliance with the Contract, of all labor, services, equipment, materials, reports, plans, specifications, deliverables, incidentals, etc. furnished to the City under this Contract. The Consultant shall promptly pay all employees as their pay falls due, shall pay promptly as they fall due all bills for labor, services, equipment, materials, reports, plans, specifications, deliverables, incidentals, etc., going into the work, and all bills for insurance, bonds, Worker's Compensation coverage, Federal and State Unemployment Compensation, and Social Security charges applicable to this Project. Before final payment is made, the Consultant shall furnish a legal statement to the City that all payments required under this subparagraph have been made.

6.6 Liens. Neither the final payment nor any part of the retained percentage if any, shall become due until the Consultant, if requested by the City, shall deliver to the City a complete release of all liens arising out of this Contract, or receipts in full in lieu thereof, and if required, in either case, an affidavit that so far as the Consultant has knowledge or information, the releases and receipts include all the labor and material for which a lien could be filed; but the Consultant may, if any subcontractor refuses to furnish a release or receipt in full, furnish a bond satisfactory to the City, to indemnify it against any lien. If any lien remains unsatisfied after all payments are made, the Consultant shall refund to the City all moneys that the City may be compelled to pay in discharging such a lien, including all costs and a reasonable attorney's fee.

7. Passing of Title and Risk of Loss. Title to each item of equipment, material, reports, plans, specifications, supplies, services, etc. required to be delivered to the City hereunder shall pass to City upon City payment to the Consultant for that item. Consultant and its insurer shall assume the risk of loss or damage up to and including the date title passes, except that City shall be responsible for loss or damage caused by City's negligence.

8. Indemnification.

8.1. The Consultant shall indemnify, defend, and hold harmless the City, City's Boards, and Board of Education, commissions, agents, officials and employees from and against all claims, suits, damages, losses, judgments, costs and expenses including

attorney's fees arising out of or resulting from the delivery of the labor, services, equipment, materials, reports, plans, specifications, design, drawings, deliverables, incidentals, etc. provided that any such claims, suits, damages, losses, judgments, costs or expenses **(i)** are attributable to bodily injury, sickness, disease or death, or to injury to or destruction of tangible property, including the loss of use resulting there from, **(ii)** are alleged to be caused in whole or in part by any willful, intentional, negligent, or reckless act or omission of the Consultant, its employees, any subcontractor or consultant, anyone directly or indirectly employed by any of them or anyone for whose acts any of them may be liable, regardless of whether or not it is caused in part by a party indemnified hereunder; **(iii)** enforcement action or any claim for breach of the Consultant duties hereunder or **(iv)** claim for intangible loss(es) including but not limited to business losses, lost profits or revenue, regardless of whether or not it is caused in part by a party indemnified hereunder.

8.2. In any and all claims against the City or any of its boards, agents, employees or officers by the Consultant or any employee of the Consultant, any subcontractor, anyone directly or indirectly employed by any of them or anyone for whose acts any of them may be liable, the indemnification obligation under Paragraph 8.1, above, shall not be limited in any way by any limitation on the amount or type of damages, compensation or benefits payable by or for the Consultant or any subcontractor under Worker's Compensation Acts, disability benefit acts or other employee benefit acts.

8.3. The Consultant understands and agrees that any insurance required by this Contract, or otherwise provided by the Consultant, shall in no way limit the responsibility to indemnify, defend, keep and hold harmless the City as provided in this Contract.

8.4. The Consultant expressly understands and agrees that any performance bond or insurance protection required by this Contract, or otherwise provided by the Consultant, shall in no way limit the responsibility to indemnify, keep and save harmless and defend the City and the City's boards, agents, employees or officers as provided herein.

8.5. Royalties and Patents. The Consultant shall, for all time, secure to the City the free and undisputed right to the use of any and all patented articles and methods used in the work and shall defend at Consultant's own expense any and all suits for infringement or alleged infringement of such patents, and in the event of adverse award under patent suits, the Consultant shall pay such awards and hold the City harmless in connection with any patent suits that may arise as a result of installations made by the Consultant and as to any award made thereunder.

8.6. In the event this Contract and/or the Contractor's, or its subcontractor, work and services provisioned hereunder is/are subject to the provisions of any Federal or State statute or regulations, or the City Charter or City Ordinance, the Consultant shall indemnify, defend and hold harmless the City from any fine, penalty or other amounts imposed on the City under said statutes, regulations, Charter or Ordinances, if caused

by Consultant, or its subcontractor, omission or commission.

9. Consultant's Insurance.

9.1. The Consultant shall not commence work under this Contract until all insurance required under this Section 9 has been obtained by the Consultant and such insurance has been approved by the City. The Consultant shall not allow any subcontractor to commence work on any subcontract until all insurance required of any such subcontractor has been so obtained and approved by the City. Insurance shall be provided by insurers that are satisfactory to the City, authorized to do business in the State of Connecticut, that have at least an "A-" Best's Rating, and are in an A.M. Best financial size category of VIII or higher. The A.M. Best classifications are based on the most current A.M. Best Company ratings or an equivalent City approved rating system.

9.2. At no additional cost to the City, the Consultant shall purchase and maintain the insurance coverages set forth below which shall protect the City from claims which may arise out of or result from the Consultant's obligation under this Contract, whether such obligations are the Consultant's or subcontractor or person or entity directly or indirectly employed by said Consultant or subcontractor, or by any person or entity for whose acts said Consultant or subcontractor may be liable.

9.3. Each insurance policy shall state that the insurance company shall agree to investigate and defend the insured against all claims for damages, even if groundless. If any insurance required herein is to be issued or renewed on a claims made form as opposed to an occurrence form, the policy must be continually renewed for a minimum of two (2) years from the completion date of this contract. If the policy is replaced and/or the retroactive date is changed, then the expiring policy must be endorsed to extend the reporting period for claims for the policy in effect during the contract for two (2) years from the completion date.

9.4. The following policies with stated limits shall be maintained, in full force and effect, at all times during which the services are to be performed by the Consultant:

9.4.1 General Liability Insurance:
$1,000,000.00 Each Occurrence,
$2,000,000.00 General Aggregate
$2,000,000.00 Products and Completed Operations Aggregate

9.4.2 Automobile Liability Insurance:
$1,000,000.00 Combined Single Limit Each Accident
Any Auto, All Owned and Hired Autos

9.4.3 Workers' Compensation: WC Statutory Limits
Employer Liability (EL)
$1,000,000 EL Each Accident

$1,000,000 EL Disease Each Employee
$1,000,000 EL Disease Policy Limits

9.4.4 Excess/Umbrella Liability Insurance:
$1,000,000.00 Each Occurrence
$1,000,000.00 Aggregate

9.4.5 Professional Liability Insurance/E&O:
$1,000,000.00 Each Wrongful Act
$1,000,000.00 Aggregate

9.4.6 Abuse/Molestation Liability:
$1,000,000 Each Occurrence
$1,000,000 Aggregate

9.5. Failure to Maintain Insurance: In the event the Consultant fails to maintain the minimum required coverage as set forth herein, the City may at its option purchase same, and offset the Consultant's invoices for the cost of said insurance.

9.6. Cancellation: The City of Waterbury shall receive written notice of cancellation from the Consultant at least thirty (30) calendar days prior to the date of actual cancellation, regardless of the reason for such cancellation.

9.7. Certificates of Insurance: The Consultant's General, Automobile and Excess/Umbrella Liability Insurance policies shall be endorsed to add the City of Waterbury as an additional insured and provide a waiver of subrogation on all lines of coverage except Professional Liability. The insurance afforded the additional insured shall be primary and non-contributory insurance and the coverage and limits provided under the Consultant's policies shall not be reduced or prorated by the existence of any other insurance applicable to any loss the additional insured may have suffered. At the time the Consultant executes this Contract, it shall furnish to the City, subject to City approval, certificate(s) of insurance and Additional Insured Endorsement and Waiver of Subrogation Endorsement verifying the above coverages, including the naming of the City of Waterbury, as follows: "**The City of Waterbury and its Board of Education is listed as an Additional Insured on a primary and non-contributory basis on all policies except Workers Compensation and Professional Liability. All policies shall include a Waiver of Subrogation except Professional Liability.**" The City's request for proposal number must be shown on the certificate of insurance. The Consultant must supply replacement/renewal certificates at least thirty (30) calendar days prior to the expiration of the policy(ies). Said certificates shall contain a provision that coverage afforded under the policies shall not be cancelled or reduced for any reasons unless notice of not less than thirty (30) calendar days has been mailed to the Office of Corporation Counsel, 235 Grand Street, Waterbury, CT 06702.

9.8. No later than thirty (30) calendar days after Consultant receipt, the Consultant shall deliver to the City a copy of the Consultant's insurance policies, endorsements, and

riders.

10. Conformance with Federal, State and Other Jurisdictional Requirements. By executing this Contract, the Consultant represents and warrants that, at all pertinent and relevant times to the Contract, it has been, is and will continue to be in full compliance with all applicable statutes, acts, ordinances, guidelines, resolutions, orders, judgments, decrees, injunctions, rules, and regulations of all government authorities applicable to performance by the Consultant of services hereunder, including those having jurisdiction over its registration and licensing to perform services hereunder; including, but not limited to, the following: *EQUAL EMPLOYMENT OPPORTUNITY ACT*; *COPELAND ANTI-KICKBACK ACT,* as supplemented in the Department of Labor Regulations (29 CFR Part 3); *DAVIS-BACON ACT* as supplemented by Department of Labor Regulations (29 CFR Part 5); Section 103 and 107 of the Contract Work Hours and Safety Standards Act, as supplemented by the Department of Labor Regulations (29 CFR Part 5); the *HOUSING and COMMUNITY DEVELOPMENT ACT of 1974*, as amended; TITLE 31 and Section 12-430(7) of the State of Connecticut General Statutes. All applicable sections of the City Charter and Code of Ordinances are incorporated by reference and made a part hereof.

10.1. Permits, Laws, and Regulations. Permits and licenses necessary for the delivery and completion of the Consultant's work and services shall be secured in advance and paid by the Consultant. The Consultant shall give all notices and comply with all laws, ordinances, rules and regulations bearing on the conduct of the work and services as specified.

10.2. Taxes-Federal, State and Local. The City is exempt from Federal Excise and Transportation, State and Local Sales and Use Taxes, including without limitation, taxes that would otherwise be imposed upon the Consultant for transactions required or necessitated hereunder between it and its subcontractors, suppliers, etc. The Consultant remains liable, however, for any applicable tax obligations it incurs. Moreover, the Consultant represents that the proposal and pricing contained in this Contract do not include the amount payable for said taxes.

10.3. Labor and Wages. The Consultant and its subcontractors shall conform to the labor laws of the State of Connecticut, and all other laws, ordinances, and legal requirements affecting the work in Connecticut.

10.3.1 The Consultant is aware of the provisions of Title 31, §53 of the Connecticut General Statutes, latest revision (the "Act"), concerning the payment of minimum wages and other payments or contributions established by the State of Connecticut Labor Commissioner for work on public facilities. The provisions of the Act are incorporated by reference and made a part of this Contract. The Act provides that the Connecticut prevailing wage law applies to certain remodeling, refurbishing, alteration, repair and new construction. The wages paid on an hourly basis to any person performing the work of any mechanic, laborer or worker on the work herein contracted to be done and the

amount of payment or contribution paid or payable on behalf of each such person to any employee welfare fund, as defined in Conn .Gen. Statute 31-53(i), shall be at a rate equal to the rate customary or prevailing for the same work in the same trade or occupation in the town in which such public works project is being constructed. Any contractor who is not obligated by agreement to make payment or contribution on behalf of such persons to any such employee welfare fund shall pay to each mechanic, laborer or worker as part of such person's wages the amount of payment or contribution for such person's classification on each pay day.

10.3.2 The Consultant is aware of, and shall comply with, the provisions of both the Federal Davis-Bacon Act and the Federal American Recovery and Reinvestment Act of 2009, the provisions of both acts hereby incorporated by reference and made a part of this Contract. The Federal Davis-Bacon Act provides that Federal wage rate laws apply to certain federally funded contracts. The American Recovery and Reinvestment Act ("ARRA") provides that Federal wage rate laws apply to all ARRA funded contracts regardless of the contract's dollar value.

11. Discriminatory Practices. In performing this Contract, the Consultant shall not discriminate against any employee or applicant for employment, with respect to his or her hire, tenure, terms, conditions or privileges of employment, or any matter directly or indirectly related to employment, because of race, color, sex, age, religious creed, disability, national origin or ancestry, marital status, family status, prior psychiatric treatment, health care, military status or source of income or because of a handicap that is unrelated to the employee's or the applicant's ability to perform the duties of a particular job or position. Subcontracts with each subcontractor shall contain a provision requiring non-discrimination in employment as herein specified. This covenant is required pursuant to §93.04 of the Code of Ordinances of the City and any breach thereof may be regarded as a material breach of this Contract. Said provisions with subcontractors shall require conformity and compliance with all Local, State and Federal laws, rules and regulations and Executive orders pertaining to discrimination and equal opportunity requirements.

11.1. Discrimination Because of Certain Labor Matters. No person employed on the work covered by this Contract shall be discharged or in any way discriminated against because such person has filed any complaint or instituted or caused to be instituted any proceeding or has testified or is about to testify in any proceeding under or related to the labor standards applicable hereunder to its employer.

11.2. Equal Opportunity. In its execution of the performance of this Contract, the Consultant shall not discriminate and shall comply with applicable laws prohibiting discrimination on the grounds of race, color, religion, sex, national origin or citizenship status, age or handicap. The Consultant agrees to comply with all Local, State and Federal laws, rules and regulations and Executive orders pertaining to discrimination and equal opportunity requirements, and will require the same of all subcontractors.

12. This section is intentionally left blank.

13. Termination.

13.1. Termination of Contract for Cause. If, through any cause, in part or in full, not the fault of the Consultant, the Consultant shall fail to fulfill in a timely and proper manner its obligations under this Contract, or if the Consultant shall violate any of the covenants, agreements, or stipulations of this Contract , the City shall thereupon have the right to terminate this Contract by giving written notice to the Consultant of such termination and specifying the effective date thereof, at least five (5) business days before the effective date of such termination.

13.1.1 In the event of such termination, all finished or unfinished documents, data, studies, reports, specifications, deliverables, etc. prepared by the Consultant under this Contract shall, at the option of the City, become the City's property, and the Consultant shall be entitled to receive just and equitable compensation for any satisfactory work completed for such.

13.1.2 Notwithstanding the above, the Consultant shall not be relieved of liability to the City for damages sustained by the City by virtue of any breach of this Contract by the Consultant, and the City may withhold any payments to the Consultant for the purpose of setoff until such time as the exact amount of damages due the City from the Consultant is determined.

13.2. Termination for Convenience of the City. The City may terminate this Contract at any time for the convenience of the City, by a notice in writing from the City to the Consultant. If this Contract is terminated by the City as provided herein, the Consultant will be paid an amount which bears the same ratio to the total compensation as the services actually performed bear to the total services of the Consultant covered by this Contract, less payments of compensation previously made.

13.3. Termination for Non-Appropriation or Lack of Funding. The Consultant acknowledges that the City is a municipal corporation and that this Contract is subject to the appropriation of funds by the City sufficient for this Contract for each budget year in which this Contract is in effect. The Consultant therefore agrees that the City shall have the right to terminate this Contract in whole or in part without penalty in the event sufficient funds to provide for City payment(s) under this Contract is not appropriated, not authorized or not made available pursuant to law, or such funding has been reduced pursuant to law.

13.3.1 Effects of Non-Appropriation. If funds to enable the City to effect continued payment under this Contract are not appropriated, authorized or otherwise made available by law, the City shall have the right to terminate this Contract without penalty at the end of the last period for which funds have been

appropriated, authorized or otherwise made available by law by giving written notice of termination to the Consultant.

13.3.2 Effects of Reduced Levels of Funding. If funding is reduced by law, or funds to pay the Consultant for the agreed to level of the products, services and functions to be provided by the Consultant under this Contract are not appropriated, authorized or otherwise made available by law, the City may, upon seven (7) calendar days written notice to the Consultant, reduce the level of the products, services or functions in such manner and for such periods of time as the City may elect. The charges payable under this Contract shall be equitably adjusted to reflect such reduced level of products, services or functions and the parties shall be afforded the rights set forth in this Contract.

13.3.3 No Payment for Lost Profits. In no event shall the City be obligated to pay or otherwise compensate the Consultant for any lost or expected future profits.

13.4. Rights Upon Cancellation or Termination.

13.4.1 Termination for Cause. In the event the City terminates this Contract for cause, the Consultant shall relinquish to the City any applicable interest, title and ownership including, but not limited to, perpetual use of any proprietary rights in and to the documents, data, studies, reports, specifications, deliverables, etc. provided to, in possession of, and properly invoiced and paid for by (except to the extent such invoiced amount is disputed) the City. With regard to third party products, the Consultant shall transfer all licenses to the City which the Consultant is permitted to transfer in accordance with the applicable third party license. The City shall have no financial obligation to compensate the Consultant for such terminated documents, data, studies, reports, specifications, deliverables, etc. unless payment is otherwise approved by the City prior to such termination. The Consultant shall be liable for costs incurred by the City, including but not limited to reasonable attorney fees and all court awarded fees and costs incurred in terminating this agreement in whole or in part.

13.4.2 Termination for Lack of Funding or Convenience. In the event of termination of this Contract by the City for lack of funding or convenience, the City shall pay the Consultant for all documents, data, studies, reports, specifications, deliverables, etc. (including any holdbacks), installed and delivered to the City as of the Termination Date and the Consultant shall relinquish to the City any applicable interest, title and ownership including, but not limited to perpetual use of any proprietary rights in and to said documents, data, studies, reports, specifications, deliverables, etc. in possession of and paid for by the City (except to the extent any invoiced amount is disputed). The Consultant shall be required to exercise commercially reasonable efforts to mitigate damages.

13.4.3 Termination by the Consultant. The Consultant may, by written notice to the City, terminate this Contract if the City materially breaches, provided that the Consultant shall give the City thirty (30) calendar days prior written notice and an opportunity to cure by the end of said thirty (30) day period. In the event of such termination, the Consultant will be compensated by the City for work performed prior to such termination date and the Consultant shall deliver to the City all deliverables as otherwise set forth in this Contract.

13.4.4 Assumption of Subcontracts. In the event of termination of this Contract, the City shall have the right to assume, at its option, any and all subcontracts for products, services and functions provided exclusively under this Contract, and may further pursue completion of the work under this Contract by replacement contract or otherwise as the City may in its sole judgment deem expedient.

13.4.5 Delivery of Documents. In the event of termination of this Contract, **(i)** the Consultant shall promptly deliver to the City, in a manner reasonably specified by the City, all labor, services, equipment, materials, reports, plans, specifications, deliverables, incidentals, etc. and other tangible items furnished by, or owned, leased, or licensed by, the City, and **(ii)** the City shall pay the Consultant for all services performed and deliverables completed and accepted (pro-rated for deliverables partially completed) prior to the effective date of the termination (except to the extent any invoice amount is disputed).

14. Ownership of Instruments of Professional Services. The City acknowledges the Consultant's documents, data, studies, reports, specifications, deliverables, etc. created and to be created pursuant to this Contract, including electronic files, are Instruments of Professional Services. Nevertheless, the final Instruments of Professional Services, including, but not limited to documents, data, studies, reports, specifications, deliverables, etc. prepared for the City under this Contract shall become the property of the City upon City payment for that Instrument of Professional Services and the City reserves the right to use the Instruments of Professional Services. Notwithstanding the foregoing or anything to the contrary contained herein, Consultant is and shall remain the sole and exclusive owner of all trademarks, trade secrets, trade names, service marks, copyrights or other intellectual property rights related to the services rendered pursuant to this Agreement ("Consultant IP"). Under no circumstances shall the City acquire any ownership interests whatsoever in any Contractor IP apart from such Instruments of Professional Services. The City acknowledges that the Consultant IP is proprietary material and information of Consultant.

15. Force Majeure. Consultant shall not be held responsible for delays nor be subject to liquidated damages when such delays are caused by conditions beyond its control, including without limitation:

15.1. Acts of God, fire, explosion, epidemic, cyclone, flood, war, strikes, revolution,

civil commotion, or acts of public enemies.

15.2. Change of law and order, proclamation, regulation, ordinance, or governmental requirement.

Upon cessation of work for reason of force majeure delays, Consultant shall use its best efforts to meet the schedule set forth in Section 5 of this Contract.

16. Subcontracting. The Consultant shall not, without the prior written approval of the City, subcontract, in whole or in part, any of the Consultant's services. Any subcontractor so approved shall be required to secure and maintain insurance coverage equal to or better than that required of the Consultant and shall name the City as an additional insured party and said subcontractors shall deliver to the City a certificate of insurance evidencing such coverages. All subcontractors shall comply with all Federal, State and Local, laws, regulations and ordinances but such requirement shall not relieve the Consultant from its requirement that all work and services provided or required hereunder shall comply with all Federal, State and Local, laws, regulations and ordinances.

16.1. The Consultant shall be as fully responsible to the City for the acts and omissions of the Consultant's subcontractors, and of persons either directly or indirectly employed by them, as it is for the acts and omissions of persons directly employed by the Consultant.

17. Assignability. The Consultant shall not assign any interest in this Contract, and shall not transfer any interest in the same (whether by assignment or novation) without the prior written approval of the City; provided, however, that claims for money due or to become due the Consultant from the City under this Contract may be assigned to a bank, trust, company, or other financial institution, or to a Trustee in Bankruptcy, without such approval. Notice of any such assignment or transfer shall be furnished promptly to the City.

18. Audit. The City reserves the right to audit the Consultant's books of account in relation to this Contract any time during the period of this Contract or at any time during the twelve month period immediately following the closing or termination of this Contract. In the event the City elects to make such an audit, the Consultant shall immediately make available to the City all records pertaining to this Contract, including, but not limited to, payroll records, bank statements and canceled checks.

19. Risk of Damage and Loss. The Consultant shall be solely responsible for causing the timely repair to and/or replacement of, City property or item(s) intended to become City property hereunder, where the need for repair or replacement was caused by the Consultant, by someone under the care and/or control of the Consultant, by any subcontractor of the Consultant, or by any shipper or delivery service. The Consultant shall be solely responsible for all costs and expenses, including but not limited to shipping, delivery, insurance, etc. associated with the foregoing repair and replacement obligation. Further, the Consultant shall be solely responsible for securing the City's written acceptance of all completed repairs and replacements required

hereunder. The City hereby retains sole discretion to determine whether a repair or a replacement is the proper remedy.

21. Entire Agreement. This Contract shall constitute the complete and exclusive statement of the contract between the parties as it relates to this transaction and supersedes all previous agreements and understandings, whether written or oral, relating to such subject matter. Any amendment to this Contract must be in writing and agreed to and executed by the City and the Consultant.

22. Independent Contractor Relationship. The relationship between the City and the Consultant is that of client and independent contractor. No agent, employee, or servant of the Consultant shall be deemed to be an employee, agent or servant of the City. The Consultant shall be solely and entirely responsible for its acts and the acts of its agents, employees, servants and subcontractors during the performance of this Contract. It is the express intention of the parties hereto, and the Consultant hereby agrees and covenants, that it and any and all third party(ies) and subcontractor(s) retained by the Consultant hereunder is/are not and shall not be deemed an employee of the City of Waterbury, but is/are and shall remain an independent contractor relative to the City and that nothing herein shall be interpreted or construed as creating or establishing the relationship of employer-employee between the City of Waterbury and the Consultant or between the City of Waterbury and any third party(ies) or subcontractor(s). Thus, the Consultant hereby covenants that it, its subcontractor(s) and third party(ies) shall not be entitled to the usual characteristics of employment, such as income tax withholding, F.I.C.A. deductions, pension or retirement privileges, Workers Compensation coverage, health benefits, etc. and that the Consultant shall be solely and entirely responsible for its acts and the acts of its agents, employees, servants, representatives, subcontractors and third party(ies).

23. Severability. Whenever possible, each provision of this Contract shall be interpreted in such a manner as to be effective and valid under applicable law. If any provision of this Contract, however, is held to be prohibited or invalid under applicable law, such provision shall be deemed restated to reflect the original intentions of the parties, as nearly as possible in accordance with applicable law, and if capable of substantial performance, the remaining provisions of this Contract shall be enforced as if this Contract was entered into without an invalid provision. If the ruling and/or controlling principle of law or equity leading to the ruling is subsequently overruled, modified or amended by legislation, judicial or administrative action, then the provision(s) in question as originally set forth in this Contract shall be deemed valid and enforceable to the maximum extent permitted by the new controlling principal of law or equity.

24. Survival. Any provisions of this Contract that impose continuing obligations on the parties shall survive the expiration or termination of this Contract for any reason.

25. Contract Change Orders.

25.1. At the sole discretion of the City, a Change Order may be issued solely by the City to modify an existing party obligation set forth in this Contract where the scope of

the Change Order is:

25.1.1 within the scope of the original Contract OR is made pursuant to a provision in the original Contract, AND

25.1.2 the Change Order monetary cost is charged solely against those funds encumbered for and at the time the Contract was originally executed by the City, that is those funds set forth in the original Contract as a not to exceed payment amount OR within the original Contract's contingency / allowance / reserve amount (if any is stated therein), AND

25.1.3 the Final Completion Date has not been changed.

25.2. Notwithstanding the foregoing subsection A, a Change Order shall not include:

25.2.1 an upward adjustment to a Consultant's payment claim, or

25.2.2 a payment increase under any escalation clause set forth in the original contract, or any Change Order, or any amendment.

25.3. That the work and/or services contemplated are necessary does not, in itself, permit a Change Order. Should the need for a Change Order arise, the request shall be reviewed, and if agreed to, approved by the City's Using Agency and any City designated representative(s). To be binding and enforceable, a Change Order shall thereafter be signed by both the Consultant, any City designated representative(s), and a duly authorized representative of the City's Using Agency prior to the Consultant's delivery of the services, etc. contemplated in said Change Order. All Change Orders are governed by the provisions of this Contract. Any contract change NOT fully complying with this Section 25 shall be effectuated solely by an amendment to this Contract complying with Section 38.073 of the City's "Centralized Procurement System" ordinance.

26. Conflicts or Disputes. This Contract represents the full and complete concurrence between the City and the Consultant and governs all disputes between them. In the instance of a conflict or dispute over issues not specifically referenced within the Contract, the following documents shall be used as historical documents. Without regard to the order of precedence, to resolve such conflicts or disputes, the historical documents are **(i)** the Consultant's Cost Schedule and **(ii)** the Consultant's Proposal.

26.1. Procedure. This procedure supersedes all statements to the contrary occurring either in proposals or other prior agreements, oral or written, and all other communications between the parties relating to this subject.

26.2. Presumption. This Contract or any section thereof shall not be construed against any party due to the fact that the Contract or any section thereof was drafted by such party.

27. Disputes; Legal Proceedings; Waiver of Trial by Jury and Continued Performance. The Consultant agrees that its waives a trial by jury as to any and all claims, causes of action or disputes arising out of this Contract or services to be provided pursuant to this Contract. Notwithstanding any such claim, dispute or legal action, the Consultant shall continue to perform services under this Contract in a timely manner, unless otherwise directed by the City.

28. Binding Agreement. The City and the Consultant each bind themselves, and their successors, assigns and legal representatives to the other party to this Contract and to the successors, assigns and legal representatives of such other party with respect to all covenants of this Contract.

29. Waiver. Any waiver of the terms and conditions of this Contract by either of the parties hereto shall not be construed to be a waiver of any other term or condition of this Contract.

30. Governing Laws. This Contract, its terms and conditions and any claims arising there from shall be governed by the laws of the State of Connecticut.

31. Notice. Except as otherwise specifically prohibited in this Contract, whenever under this Contract approvals, authorizations, determinations, notices, satisfactions or waivers are required or permitted, such items shall be effective and valid only when given in writing signed by a duly authorized officer of the City's Using Agency or the Consultant, and delivered in hand or sent by mail, postage prepaid, to the party to whom it is directed, which until changed by written notice, are as follows:

Consultant: Waterbury Bridge to Success Partnership, Inc.
83 Prospect Street
Waterbury, CT 06702

City: City of Waterbury
Board of Education
235 Grand Street
Waterbury, CT 06702

32. City Code of Ordinances, Ethics and Conflict of Interest Code, Provisions.
The Person (the term "Person" shall herein be as defined in Section 38 of the City's Code of Ordinances) supplying the documents, data, studies, reports, specifications, deliverables, etc. under this Contract shall comply with all applicable Federal, State and Municipal statutes, regulations, charters, ordinances, rules, etc. whether or not they are expressly stated in this Contract, including but not limited to the following:

32.1. It shall be a material breach of this Contract, and, except as may be permitted by

regulations or rulings of the City of Waterbury Board of Ethics it shall be a violation of the City's Code of Ordinances, for any Public Official, City Employee or Member of a Board or Commission who is participating directly or indirectly in the procurement process as set forth in the City's Code of Ordinances, including those participating in exempt transactions, to become or be the employee of any person contracting with the governmental body by whom the Official, Employee, or Board or Commission member is employed or is a member.

32.2. It shall be a material breach of this Contract, and it shall be a violation of the City's Code of Ordinances for any Person to offer, give, or agree to give any current or former Public Official, Employee or Member of a Board or Commission, or for such current or former Public Official, Employee or Member of a Board or Commission to solicit, demand, accept or agree to accept from another Person, a gratuity or an offer of employment in connection with any: decision; approval; disapproval; recommendation; preparation of any part of a program requirement or a requisition; influencing the content of any specification or procurement standard; or rendering of advice, investigation, auditing, or in any other advisory capacity in any proceeding or application, request for ruling, determination, claim or controversy, or other particular matter, pertaining to any program requirement or a Contract or Purchase Order, or to any solicitation or proposal therefore.

32.3. It shall be a material breach of this Contract and it shall be a violation of the City's Code of Ordinances for any payment, Gratuity, or offer of employment to be made as an inducement for the award of a subcontract or order, by or on behalf of a subcontractor, the prime Consultant or higher tier subcontractor or any Person associated therewith, under a Contract or Purchase Order to the City.

32.4. The value of anything transferred or received in violation of the City's Charter, Code of Ordinances, and/or regulations promulgated there under, by any Person subject to said Charter and/or Ordinances may be recovered by the City.

32.5. Upon a showing that a subcontractor made a kickback to the City, a prime Consultant or a higher tier subcontractor in connection with the award of a subcontract or order there under, it shall be conclusively presumed that the amount thereof was included in the price of the subcontract or order and ultimately borne by the City and will be recoverable hereunder from the recipient. In addition, some value may also be recovered from the subcontractor making such kickbacks. Recovery from one offending party shall not preclude recovery from other offending parties.

32.6. It shall be a material breach of this Contract and it shall be a violation of the City's Code of Ordinances for a Person to be retained, or to retain a Person, to solicit or secure a contract with the City upon an agreement or understanding for a commission, percentage, brokerage, or contingent fee; and every Person, before being awarded a City contract, shall deliver to the City, on a City authored form, a representation that such Person has not retained anyone in violation of this subsection 32.6, the failure to deliver said form being a material breach of this Contract and a violation of the City's

Code of Ordinances. Note, however, this subsection 32.6 shall not apply to full-time Employees who, as a condition of their employment, may be entitled to bonuses or other fees in accordance with their employment relationship.

32.7. The Person hereby expressly represents that he/she/it has complied with those sections of the City's Code of Ordinances requiring that said Person has **(i)** delivered to the City an affidavit, on a City authored form, stating that the Person and its affiliates have no delinquent taxes or other financial obligations owned to the City; **(ii)** filed the City authored financial disclosure statement form as set forth in the City's Code of Ordinances regarding disclosure of financial interests; **(iii)** delivered to the City a written acknowledgement, on a City authored form, evidencing receipt of a copy of the "Ethics and Conflict of Interest" ordinance for the City of Waterbury and hereby expressly represents that said Person is in full compliance with the entirety of said Code of Ordinances; and **(iv)** filed a current list of all taxable personal and real property as required by the State of Connecticut General Statutes. Any violation of this subsection 32.7 shall be deemed a material breach of this Contract and shall be a violation of the City's Code of Ordinances.

32.8. The definitions set forth in the City's Code of Ordinances shall be the primary source for interpretation of the forgoing subsections 32.1-32.7.

32.9. The Consultant is hereby charged with the requirement that it shall have knowledge of, and shall fully comply with, all relevant provisions of the City's Charter and all relevant provisions of the City's Code of Ordinances, including without limitation Chapters 93, titled "Discriminatory Practices", Chapter 38 titled "Centralized Procurement System", and Chapter 39 titled "Ethics and Conflict of Interest", of said Code as may be amended from time to time.

32.10. The Consultant hereby acknowledges receipt of a copy of the Chapters 38 and 39 of City's Ordinance regarding Procurement, Ethics, and Conflicts of Interest and has familiarized itself with said Code and hereby agrees to adhere to said Code. The text of Chapters 38 and 39 of said Code may be obtained from the Office of the City Clerk of the City and on the internet at the City Clerk's web site: *http://www.waterburyct.org/content/458/539/default.aspx* [click link titled "The City of Waterbury Code of Ordinances Passed 8/24/2009". For Chapter 38, click on "TITLE III: ADMINISTRATION", then click on "CHAPTER 38: CENTRALIZED PROCUREMENT SYSTEM". For Chapter 39, click on "TITLE III: ADMINISTRATION", then click on "CHAPTER 39: ETHICS AND CONFLICTS OF INTEREST"].

32.11. The Consultant is hereby charged with the requirement that it shall have knowledge of, and shall fully comply with, the City's Ordinance Sections 34.15 through 34.99 entitled, "Ordinance Concerning the Hiring of Waterbury Residents on Certain Publicly-Funded Construction Projects" and the State of Connecticut Legislature's Special Act No. 01-1.

32.12. Every Person who conducts business with, contracts, with or provides commodities or services to the City, is charged with notice of the extent of the powers and authority, and the limitations thereon, of the Public Officials and Employees of the City, as set forth in the charter of the City, the Code of Ordinances and any Regulations or Policies pertaining thereto. In particular, and without implying any limitation as to its applicability, it applies to all Persons who participate in the procedures pertaining to the Centralized Procurement System as set forth in Chapter 38, and the Ethics and Conflict of Interest provisions set forth in Chapter 39 of the Code of Ordinances.

32.13. INTEREST OF CITY OFFICIALS. No member of the governing body of the City, and no other officer, employee, or agent of the City who exercises any functions or responsibilities in connection with the carrying out of the Project to which this Contract pertains shall have any personal interest, direct or indirect, in this Contract.

32.14. PROHIBITION AGAINST CONTINGENCY FEES. The Consultant hereby represents that it has not retained anyone to solicit or secure a contract with the City upon an agreement or understanding for a commission, percentage, brokerage or contingency fee.

32.15. FREEDOM OF INFORMATION ACT NOTICE. Pursuant to State statute, in the event the total compensation payable to the Consultant set forth in Section 6 herein is greater than $2,500,000.00, the City is entitled to receive a copy of any and all Consultant records and files related to the performance of this Contract and those records and files are subject to the Freedom of Information Act ("the Act") and may be disclosed by the City pursuant to the Act.

(signature page follows)

IN WITNESS WHEREOF, the parties hereto execute this Contract on the dates signed below.

WITNESSES:

CITY OF WATERBURY

_____

By:_____
Paul K. Pernerewski, Jr., Mayor

_____

Date:_____

WITNESSES:

WATERBURY BRIDGE TO SUCCESS PARTNERSHIP, INC.

By: Althea M. Brooks

Its: Exec Director

9/22/2026
Date

Althea M. Brooks

ATTACHMENT A

1.1.1 Sole source letter, dated August 26, 2026, consisting of 1 page, attached hereto;

1.1.2 Consultant's Cost Schedule, entitled "Boost Community Schools Budget SY 26-27," consisting of 1 page, attached hereto;

1.1.3 Consultant's Proposal, entitled "Scope of Work – Sole Source Community Schools Initiative," consisting of 7 pages, attached hereto;

1.1.4 Annual Statement of Financial Interests; Disclosure and Affidavit Re: Outstanding Obligations to the City; Debarment Certification; Corporate Resolution, Non-Collusive affidavit, as provided and executed by Consultant, incorporated herein by reference;

1.1.5 Certificates of Insurance, incorporated herein by reference;

1.1.6 Licenses, incorporated herein by reference;

1.1.7 All applicable Federal, State and local statutes, regulations charter and ordnances, incorporated herein by reference

KEVIN McCAFFERY
DIRECTOR OF PURCHASING

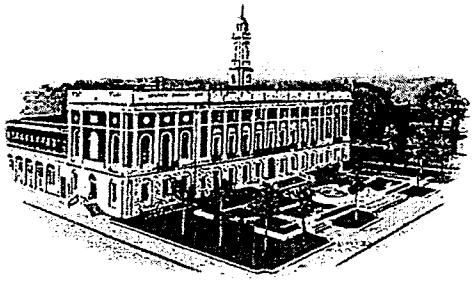

OFFICE OF THE DIRECTOR OF PURCHASING

THE CITY OF WATERBURY

CONNECTICUT

To: Anthony F. Brooks, Assistant Superintendent of Schools

From: Kevin McCaffery, Director of Purchasing

Subject: Sole Source for BOOST Community School Initiative with Waterbury Bridge To Success Partnership

Date: August 26, 2026

After review of your memo dated August 24, 2026 along with the Bridge To Success literature provided, it is clear that after a decade of use by Waterbury Public Schools, Bridge To Success is integral to the school system. Therefore, in my opinion this is a sole source procurement per §38.026 SOLE SOURCE PROCUREMENT (B)(4).

Scope of Work
Sole Source Community Schools Initiative
2026-2027

1. Purpose

This Scope of Work outlines the objectives, deliverables, and responsibilities for implementing a Community Schools strategy through a sole source agreement with Waterbury Bridge to Success (herein "BTS") Partnership, Inc. The Boost Community Schools Initiative aims to integrate academic, health, social, and community resources to improve student outcomes, support student success and strengthen family and caregiver engagement.

2. Organization Mission & Vision:

Established in 2010, Waterbury Bridge to Success (BTS) is the state's first cradle to career initiative. It is a cross-sector partnership committed to dismantling the policies, practices and beliefs that have historically disenfranchised all stakeholders with the intent to co-create sustainable equitable systems that support youth, families, and communities from cradle to career. BTS believes in collaborative action that invites institutions, the community, and individual stakeholders to rejuvenate and reimagine old and new pathways to self-determination and actualization for children, youth, and families. BTS has unique expertise, established relationships, and a proven track record in implementing the Community Schools model within the target district. Their sole source designation ensures continuity, efficiency, and alignment with existing partnerships and systems.

OUR CAPACITY:

As a backbone organization guided by a collective impact approach, BTS hosts the Early Start Connecticut Early Childhood Local Governance Partnership and Collaborative Action Networks (CANs) for Day 43 Maternal Health Initiative, Raise the Rate /College and Career Pathways, Transforming Community Initiatives addressing mental health, transportation and housing and two Think Tanks (TT) – Let Youth Lead and Parents of Waterbury - composed of a broad representation of stakeholders who have content expertise, knowledge as well as influence in the community and have an understanding on how to leverage their resources to move transformative systemic work forward. Each CAN and TT meets to analyze barriers to youth, families, and community success and to co-create solutions to strengthen outcomes within the Waterbury community. We focus on improving

83 Prospect Street | Waterbury, Connecticut | 06702
www.waterburybridgetosuccess.org | @waterburybts_ | 203.754.0040

outcomes and indicators, leveraging existing resources, and striving to engage, empower and inform the Waterbury community.

***BOOST Community Schools Initiative*:**

BOOST, established in 2016 in partnership with Waterbury Public Schools, serves as a "bridge" between the community, providers, and schools. As the backbone organization managing the City's cradle to career initiative, BTS convenes parents, providers, practitioners, residents & businesses around equitable, culturally responsive& accessible programming to support youth & their families with their social, academic/vocational, emotional, and physical needs. Our goal is to address barriers to student success – chronic absenteeism, math and reading scores, social/emotional/physical health and graduation and post-secondary rates for students. As such, BOOST focuses on the whole child, centering educational equity and incorporates in and out of school programs to support and empower students, families, and their communities that individualized to each school community and its needs, goals and objectives.

- ***Boost Community Schools Mission:***

Transform participating schools into **community-powered hubs** where academics, health, and social supports work together to ensure every student thrives and every family is empowered.

Strategic Goals

a) **Elevate Student Success** – Boost academic performance, attendance, and graduation rates.

b) **Strengthen Family Engagement** – Increase parent participation in school life and decision-making.

c) **Expand Access to Services** – Provide seamless health, mental health, and social supports.

d) **Build Community Resilience** – Address systemic barriers through strong partnerships.

83 Prospect Street | Waterbury, Connecticut | 06702
www.waterburybridgetosuccess.org | @waterburybts_ | 203.754.0040

Scope of Work
Sole Source Community Schools Initiative
2026-2027

3. Sole Source Justification

Waterbury Bridge to Success Partnership, Inc's unique qualifications, established trust with stakeholders, and prior successful implementation of the Community Schools model for the past 10 years as the only entity and grantee in Waterbury to implement the Full-Service Community Schools Model makes BTS the only viable choice for ensuring program continuity and effectiveness.

Why Sole Source?

The selected provider is **uniquely qualified**:

- Deep, long-standing relationships with students, families, and community partners.
- Proven track record of **measurable improvements** in attendance, achievement, and engagement.
- Existing infrastructure that currently operates year-round and allows for **immediate and ongoing implementation** without costly delays.

4. Objectives

- Establish, maintain and sustain a **Community Schools framework** in the identified and designated schools.
- Coordinate wraparound services to address academic, social-emotional, health and basic needs of the students, educators, families and caregivers in each school community.
- Build strong school–family–community partnerships.
- Improve student and family attendance, engagement, and achievement.

5. Scope of Services

The provider will fulfill the following activities:

83 Prospect Street | Waterbury, Connecticut | 06702
www.waterburybridgetosuccess.org | @waterburybts_ | 203.754.0040

Scope of Work
Sole Source Community Schools Initiative
2026-2027

a) **Leadership & Coordination**

- Assign a **Community School Coordinator** to each participating school.
- Facilitate a site-based leadership team including school staff, families, and community partners.

b) **Needs Assessment & Asset Mapping**

- Conduct a comprehensive needs assessment for each school.
- Map existing community assets and identify service gaps.

c) **Program Implementation**

- Develop and execute an annual Community School Action Plan for each school.
- Coordinate academic enrichment, health services, family engagement programs, and relevant and aligned before, during and after-school activities.

d) Partnership Development

- Formalize partnerships with local agencies, nonprofits, and service providers.
- Leverage resources to expand student and family support services.

e) Monitoring & Evaluation

- Track key performance indicators (attendance, academic progress, family participation, programming and service delivery).
- Provide quarterly progress reports and an annual impact summary.

Key Activities

- Deploy 6 **full-time Community School Coordinators** in each school including one identified to support family, caregivers and community residents in the implementation of a whole school, whole child, whole community approach.

Scope of Work
Sole Source Community Schools Initiative
2026-2027

- Conduct **needs assessments** through student, educator and parent survey collection within the first 90 days of the start of school.
- Implement comprehensive, focused and coordinated **academic enrichment (before, during and after school) including** social emotional, and behavioral **health services**, and **family engagement and capacity building workshops and events.**
- Formalize partnerships with local agencies, nonprofits, and businesses to support the strategic vision, school and district improvement plans and priorities.
- Track and report progress quarterly, including evaluation of all services and programs rendered and a comprehensive annual report within 45 days of the close of the school year.

Deliverables

- Needs assessment, asset mapping and evaluative reports.
- Annual Community School Action Plans for each identified school developed in conjunction with each principal, Asst. Superintendent, site coordinators and research, data and analytics team.
- Quarterly and annual performance reports.
- Partnership agreements and leveraged resource summaries for partners and service impact implemented within each school and community.

***Community Schools Implementation/Programmatic/Direct Service Staff*:** To ensure success, metrics are achieved, and the partnership is engaging in continuous improvement for attaining optimal success, the positions required are as follows:

1. *BOOST Site Coordinators* – Boost Coordinator are school based. The primary purpose of the position is to provide direct, on-site support to school administration, BOOST providers and service recipients/program participants. Coordinators would report directly

83 Prospect Street | Waterbury, Connecticut | 06702
www.waterburybridgetosuccess.org | @waterburybts_ | 203.754.0040

to the Director of Community Schools. Additionally, they will serve as point-contact for service recipients, program participants and community members in need of information regarding specific programming, services and/or the Community Schools Initiative. The following are additional responsibilities associated with the coordinator's role:

- Works in conjunction with the School Leadership as a member of the building staff/team
- Coordinate all school-based Team Meetings to discuss the results of all relevant evaluation tools and school- based data (i.e., attendance, behavior) and identify potential recommendations to improve or maintain desired outcomes.
- Coordinate regularly with fellow Liaisons to discuss strategy and support mutual efforts
- Maintain regular communication with school administration, teachers, and other school staff to provide on-going support and exchange of program/service information
- Remain knowledgeable about current and pending partnerships, programs and services offered at CS so to connect students, families, and residents with available resources
- Coordinate with Director of Community Impact & marketing to support promotion of programming and services via regular communications to student/parent/community listservs and social media
- Coordinate regularly with fellow Coordinators to discuss strategy and support mutual efforts
- Assist with Program & Service Evaluations by distributing and collecting routine pre/post surveys (when applicable) and sharing findings with Data Coordinator

Timeline

- **Months 1–2:** Assess needs and identify leadership teams (July 2026 – Aug. 2026).
- **Months 3–4:** Develop action plans, formalize partnerships (Sept. 2026 – Oct. 2026)
- **Months 5–12:** Implement programs, monitor, and report (Nov. 2026 – June 2027).

83 Prospect Street | Waterbury, Connecticut | 06702
www.waterburybridgetosuccess.org | @waterburybts_ | 203.754.0040

Scope of Work
Sole Source Community Schools Initiative
2026-2027

7. Organizational & District Roles & Responsibilities

- **Waterbury Bridge to Success Partnership, Inc.:** Lead all planning, coordination, data collection, assessment, reporting and implementation activities stated herein; maintain communication with stakeholders.
- **District:** Provide access to school facilities, data, and staff; support partnership engagement.

9. Payment Terms

Payments will be made contingent upon the submission of deliverables and progress reports in accordance with the following quarterly schedule:

- October 15, 2026
- January 15, 2027
- April 15, 2027
- July 15, 2027

Funding & Sustainability

Grant funds will support staffing, program delivery, and evaluation. The provider will secure additional **funds and identify in-kind contributions** to sustain the initiative beyond the grant period.

83 Prospect Street | Waterbury, Connecticut | 06702
www.waterburybridgetosuccess.org | @waterburybts_ | 203.754.0040

Waterbury Board of Education

THE CITY OF WATERBURY 236 Grand Street | Waterbury, CT 06702 203-574-8009

Elizabeth C. Brown
President

October 8, 2026

Honorable Board of Aldermen
c/o City Clerk
City of Waterbury
235 Grand Street
Waterbury, CT 06702

Ladies and Gentlemen:

We request your review and approval, subject to the Board of Education's anticipated approval at its rescheduled regular meeting of October 8, 2026, of a Facilities Use Agreement, at no cost, with the University of Connecticut for space/facilities/equipment for the Waterbury Robotics Institute.

Respectfully,

Carrie A. Swain, Clerk
Waterbury Board of Education

WATERBURY
PUBLIC SCHOOLS

Michael Merati
Supervisor of Career & Technical Education
(203) 573-5029
mmerati@waterbury.k12.ct.us

To: Board of Education

From: Michael Merati, Supervisor of Career & Technical Education, Academic Office

Date: September 22, 2026

Re: Board of Education Approval Request / UConn Robotics Facility Use Agreement - Executive Summary

The Academic Office/Education Department respectfully requests your approval of the above-referenced agreement to establish a partnership with UConn Waterbury. Under this agreement, Waterbury Public Schools students can access the UConn Waterbury Robotics Institute to practice and collaborate for upcoming competitions.

The agreement, which is attached for your review and consideration, is effective on January 1, 2027, after being signed by the Mayor, and expires on June 30, 2032. There are no costs associated with this agreement.

Lastly, please be advised that the Education Department will have a representative present at your upcoming meeting to answer any questions you may have regarding this matter.

Respectfully Submitted,

Michael Merati
Supervisor of Career & Technical Education
236 Grand Street, Room 164
Attachment Cc: Kristen Nelson
File: CRT26-345

UCONN
UNIVERSITY OF CONNECTICUT

FACILITIES USE AGREEMENT

ORDER FORM

This Facilities Use Agreement (the "Agreement") is entered into by and between the University of Connecticut, a constituent unit of the State of Connecticut System of Higher Education ("the University") and the undersigned entity (the "Contractor"), and sets forth the terms and conditions on which the University will permit the Contractor to use certain space, facilities, and/or equipment owned by the University for Contractor's event indicated below (the "Event"). The Agreement consists of this Order Form and the attached General Terms and Conditions, which are hereby incorporated by reference as if fully set forth herein.

1) Event Name: [Waterbury Robotics Institute]

2) Location and Description of the Space*: [36 N. Main St, Waterbury, CT 06702 NOL 223]

3) Date(s) and Time(s) of use of the Space: [01/01/2027 – 06/30/2032]
Additional time(s) for set-up: [3:00pm-8:00pm Monday – Friday]
Additional time(s) for break-down: Saturdays and Sundays may be agreed upon, in writing, by the parties at their discretion.

4) Permitted use of the Space: [Classroom/Multipurpose]

5) Maximum number of Attendees: [94]

6) Description of use of Equipment (if any): [Utilizing robotics field to test robots, practices, Competitions]

7) Description of use of Services (if any): [NA]

8) Catering Services (if any): [NA]

9) Total Use Fee*: [NA]
Deposit Amount & Due Date(s): [_____]
Balance Amount & Due Date(s): [_____]

Remittance Instructions: Payment should be sent to:
[NA]
[ ]
[ ]

10) Term of this Agreement: [01/01/2027 – 06/30/2032]

** The Space location and the Use Fee assigned above are based on the information provided by the Contractor as of the date hereof. The University reserves the right to modify the Space location and/or Usage Fee based upon changes to the nature of the Contractor's proposed use of the Space identified after the date hereof.*

[Signature Page Follows]

FACILITIES USE AGREEMENT

ORDER FORM

By signing below, the Contractor agrees that its use of the Space for the Event will be subject to, and the Contractor shall abide by, all the terms and conditions set forth in this Agreement.

CONTRACTOR: City of Waterbury, (name), a Connecticut (state), Municipality (type)

By:_____

Name: Paul K. Pernerewski, Jr.

Title: Mayor, City of Waterbury

Date:-_____

Contractor Address (for notices only):

City Hall, 235 Grand Street (Address)

Waterbury, CT 06702 (Address)

203-574-6731 (Phone)

NA (Email)

203-574-8340 (Fax)

Attn:_____(Contact)

APPROVED AND ACCEPTED:

UNIVERSITY OF CONNECTICUT

By:_____

Name: Fumiko Hoeft

Title: Campus Dean & Chief Administrative Officer

Date: 09/23/2026

University Address (for notices only):

99 E Main Street (Address)

Waterbury, Ct 06702 (Address)

203-236-9820 (Phone)

fumiko.hoeft@uconn.edu (E-Mail)

_____ (Fax)

Attn:_____(Contact)

FACILITIES USE AGREEMENT

GENERAL TERMS AND CONDITIONS (January 1, 2026)

1. **Reservation of Space.** The University will reserve the Contractor's use of the space, facilities, and/or equipment (collectively, the "Space") indicated in the Order Form during the period of time indicated in the Order Form (the "Term") following execution of the Order Form by both parties (the "Effective Date") and the University's receipt of the deposit (if applicable). The University shall not be responsible for providing, for use of the Contractor, any Space not described on the Order Form. Contractor shall only use the Space for the sole purpose of the Event set forth in the Order Form and in strict compliance with the terms and conditions of the Agreement.

2. **Payment Terms – N/A**

   a. The Use Fee contained on the Order Form is the minimum cost of the Space, based on the University's evaluation of information provided by the Contractor and does not include any additional labor or equipment. As set forth below, the University reserves the right to add, change, alter, or delete any rule, policy or procedure pertaining to the rental of, usage of, or fees charged for the facilities and/or equipment.

   b. The deposit indicated on the Order Form shall be credited against the total Use Fee.

   c. Deposits and payments are non-refundable except where the University is unable to deliver possession of the Space through no fault of the Contractor.

   d. If the Contractor requires services, staff, equipment, and/or material in excess of those specified on the Order Form, the Contractor agrees to pay the University without demand any sum which may be due for any additional service, custodial overtime services, technical assistance, security services and equipment or material furnished or loaned by the University.

      If the Contractor should decide not to utilize the Space or any portion thereof, the University shall not be obligated to reduce the Use Fee.

3. **Contractor Responsibilities.**

   a. The Contractor shall not include the name of University and/or any of its institutional or athletic insignia or logos in any written materials, advertising or promotion without the prior written consent of the University other than as the location for the Event. The name of the University of Connecticut is not to be associated with any group that is not a bona-fide organization of the University.

   b. Contractor hereby warrants that it owns all rights, title and interest to, or is otherwise fully authorized to perform and display publicly, and to record, any and all parts of the event(s) covered by this Agreement, including without limitation all musical works, dramatic works, literary works, pictorial and graphic works and chorographical works. Contractor shall have the sole obligation to obtain all permits, licenses and authorizations necessary from the holder of any copyright or other proprietary right of any and all parts of the event(s) covered by this Agreement, and shall immediately upon the request of the University, deliver written proof of such to the University.

   c. The University reserves all commercial broadcasting, television, recording and filming rights for its own benefit. The University will consider releasing these rights under a mutually beneficial agreement with the Contractor. Bona fide news coverage shall remain exclusive of such agreement. The Contractor shall not permit the vending or distribution of any merchandise and/or service at the Space except where specifically agreed upon as a part of this Agreement.

   d. The Contractor may not assign any part or right of this Agreement or sublet the University or any part thereof to any other party without the prior written consent of University. The University will not be responsible for any agreement(s) made by the Contractor to Event participants or any other party unless such agreements are expressly made part of this Agreement.

   e. The Contractor agrees to furnish the University Contact with a copy of any contract between the Contractor and other parties for review prior to final approval for the use of University facilities.

f. The Contractor shall comply with all applicable rules, policies and procedures promulgated by the University governing the use of the University's property and equipment. Specific system and University policies and procedures will be made available to the Contractor upon request. The Contractor shall at all times comply with and observe all federal and state laws, local laws, ordinances, and regulations which are in effect during the period of this Agreement which in any manner affect its conduct or its use of the Space. The University shall not be required to observe or comply with any rules, regulations, or policies of the Contractor that are not specifically stated and agreed to as part of this Agreement.

g. In the event of weather-related or other closing announcements, please call the relevant Campus's Weather Information Line. A list of regional campus numbers can be found at the following website: http://alert.uconn.edu/. Information is also provided to local radio and television stations; however, the notifications are provided by the media as a courtesy and can be subject to inaccuracies. It is the responsibility of the Contractor to contact its attendees in the event of any cancellation. Please note that if the Event is cancelled due to inclement weather, every effort will be made to reschedule. In the event the University is unable to reschedule the Event, the Contractor's deposit will be refunded.

h. The Contractor shall see that all refuse and waste will be deposited in proper receptacles each day of the Event.

i. The Contractor shall utilize only the parking areas designated for all automotive parking of Event participants, parents, guests and spectators and agrees to instruct all Event participants, parents, guests and spectators to comply with this requirement.

4. Security.

a. The Contractor agrees that it shall be responsible for the cost of any security services so provided by the University. The official representative of the University on site during the Term shall have full responsibility for the operation of the Space and the areas immediately adjacent thereto and shall act for and on behalf of the University in the management, supervision and control of the Space.

b. The Contractor shall be responsible for any and all loss of, or damage or injury to, any property owned by the University resulting from the negligent and/or intentional acts of its officers, employees, agents or attendees.

c. The Contractor shall be responsible for the conduct of those in attendance at the Event and shall, at the Contractor's expense, provide for the necessary personnel, as determined by the University, to provide adequate and appropriate supervision of these attendees in accordance with and adherence to all of University policies and procedures which include but are not limited to the use of alcoholic beverages, consumption of food and the prohibition of smoking in all University facilities.

d. Should there be a conflict during the presentation of the Event and the Contractor agrees that the official representative of the University will have complete supervision, direction and operational control.

e. The Contractor shall complete a University accident report for any incident requiring administration of first aid at the Event. Said accident reports shall be provided to the University's Public Safety Division within twenty-four (24) hours of any incident.

f. The University shall revoke the privilege of any participant to use any University facility if, in the sole opinion of the University, the participant displays behaviors that are injurious or potentially injurious to themselves, others or property of the University.

g. The Contractor shall not over-subscribe the Event in such a way as to exceed the legal fire capacity, of any of the facilities. If requested, the Contractor shall provide ticket manifests to verify that no over-subscriptions have occurred.

5. Equipment.

a. It is the responsibility of the Contractor to provide the University with all necessary information with regard to set-up, audio/visual, and other specific information relating to the use of the facilities 30 business days prior to the event. Failure of the Contractor to provide the necessary information will relieve the University from any obligation to provide these services in the manner desired by the Contractor.

b. Equipment provided to or rented by the Contractor as part of this Agreement is for use only in the facilities herein contracted and under the supervision, and operation where appropriate, of University personnel. Under no circumstances

shall any equipment be moved from the facilities and/or removed from campus without the express written approval of the University.

c. The Contractor shall see that any equipment provided by the University pursuant to this Agreement shall be used appropriately and returned in good working order to its proper location following use each day.

d. The Contractor agrees that equipment not specified as part of this Agreement shall not be used by the Contractor or Event participants.

e. Contractor agrees that all electrical connections must be made by University personnel and shall not install or operate any equipment, fixture or device, or operate or permit to be operated any engine, motor or other machinery, or use gas, electricity or flammable substances except with prior written approval of the University, under such conditions and restrictions as University may specify.

f. The Contractor agrees that no equipment, device or fixture may be used which, in the opinion of University, endangers the structural integrity of University facilities.

g. No candles are allowed in the facility and the hanging of decorations with tape or nails, to any woodwork, is prohibited.

h. Any equipment or effects of the Contractor remaining on the premises for more than 48 hours after the expiration of this contract without prior written permission of University shall be deemed abandoned and disposed of by University at its sole discretion.

i. The Contractor shall use only its own mobile device or pay telephones to conduct any business while using the facilities, unless there is an emergency.

6. Food Service / State Sales Tax – N/A

a. The University presently has a contract for the provision of food service with a food service vendor, pursuant to which the food service vendor provides catering services at the University. Requests for catering services shall be made though the University's food service vendor. Food orders must be placed a minimum of two (2) weeks prior to the Event. The Contractor shall provide an estimate of the number of expected attendees to the University's food service vendor at the time the service request is placed. The Contractor shall provide the University's food service vendor a guaranteed guest count no fewer than forty-eight (48) hours prior to the Event.

b. If applicable, the Contractor shall pay, at a minimum, the per person cost for the number of guests designated in guaranteed guest count provided to the University's Event Management Office, as well as the per person cost for any guests served in excess of the guaranteed count. Prices for catering services may be obtained from the University's food service vendor. The University's food service vendor shall prepare and submit an invoice for the catering service to the Contractor, which invoice shall provide for payment by the Contractor directly to the food service vendor.

c. In all cases, all information pertaining to changes in food menus, guaranteed guest counts or any other related food service item, must be communicated directly to the University's food service vendor. The Contractor agrees that neither the University nor the University's food service vendor shall be responsible for changes in services required or the number of attendees for which the Contractor is charged if such changes are not communicated directly to the University's food service vendor within the time frames specified in this Section V.

d. The Contractor shall cancel catering orders, by directly notifying the University's food service vendor, a minimum of forty-eight (48) hours (excluding weekends) in advance of the Event. Should the Contractor fail to do so, it shall be responsible for the full cost of the catering service requested, which cost shall be based on the guaranteed guest count provided in accordance with subsection 1 of this Section. Cancellations that are necessitated by inclement weather must be made by 9:00 a.m. eastern standard time on the day of the Event.

e. Under the Connecticut General Statutes, all sales of food and/or beverages for events held on campus are subject to the Connecticut state sales tax in effect at the time the Event occurs, unless the Contractor provides one of the following approved certifications for tax exemption for the program:

f. The organization is not reimbursed, in whole or in part, by donation or otherwise, for its payment for the meal by those consuming the meals, and the Contractor has provided an approved CERT-112 or CERT-123 from the Connecticut State Department of Revenue Services listing the University as the retailer. Such exemptions take a minimum of six (6) weeks

to process through the Connecticut State Department of Revenue Services. Request forms are available from the Connecticut State Department of Revenue Services either at their office or website, http://www.ct.gov/drs.

g. The Contractor is a nonprofit organization and is collecting a donation or leveling a charge for admission as a fundraiser and has supplied a completed CERT-119 or CERT-134 indicating that the Event is one (1) of the five (5) fundraisers or social events covered by the exemption the organization has for that calendar year, under the SN 98(11) Exemption from the Connecticut State Department of Revenue Services, and listing the University as the retailer. Under no circumstances shall more than five (5) CERT-119 or CERT-134 forms be accepted from any one contractor in a given calendar year.

h. In all cases, the Contractor shall submit the appropriate documentation to the University when the Agreement is executed or, in cases where a CERT-112 or CERT-123 is being requested, no later than two (2) weeks prior to the Event. If a CERT-112 or CERT-123 is to be utilized, the Contractor shall submit the request to the Connecticut State Department of Revenue Services no later than eight (8) weeks prior to the Event.

i. In all cases where the appropriate documentation for tax exemption is not provided within the specified time, the Contractor will be charged all appropriate Connecticut state sales tax.

7. Specific Terms And Conditions Applicable To Any Program Involving Minors.

a. For the purposes of this Section, "Event Participants" are defined as all those who are in attendance as a result of the Contractor's operation of the Event including, but not limited to, Event attendees ("Attendees"), Contractor's staff and volunteers, service subcontractors, exhibitors, speakers and their guests ("Event Staff").

b. The Contractor shall comply with Connecticut General Statutes §§ 17a-101 through 17a-103a, inclusive, which currently set forth Connecticut's mandatory reporting laws concerning known or suspected abuse or neglect of a minor. The Contractor shall ensure that all of its Event Staff who will supervise or otherwise come into contact with minor Event Participants are fully aware of, and have been sufficiently trained to comply with, their reporting obligations pursuant to sections 17a-101 through 17a-103a, as may be amended from time to time.

c. Contractor shall only allow Event Staff who have successfully completed a background screening to have direct contact with minor Attendees. Criminal background screening must meet the standards set forth in the University's Protection of Minors and Reporting of Child Abuse and Neglect Policy. Contractor shall be responsible for verifying the completion of said background screenings and shall make such verification available to the University upon request.

d. The Contractor shall implement and enforce program rules and policies for the Event that are designed to safeguard minors.

e. The Contractor shall provide adequate adult supervision of minor Attendees, including establishing and adhering to supervisory ratios consistent with the requirements set forth in section 19-13-B27a(n) of the Connecticut Agencies Regulations. The Contractor shall establish procedures to properly account for the whereabouts of minor Attendees (i.e., sign-in/sign-out procedures, etc.) for the duration of the Event. The Contractor is solely responsible for ensuring, and shall ensure, that all minor Attendees are properly supervised and accounted for at all times. The Contractor acknowledges and understands that the University will not provide or be responsible for the supervision of any minor Attendees or other Event Participants.

f. The Contractor shall procure a waiver of liability from each Attendee acknowledging that the Event is not run by the University and that the University shall be held harmless from any liability arising out of operation of the Event by the Contractor, signed by the Attendee's parent (guardian) if under the age of eighteen (18).

g. Contractor's failure, including the failure of any of Contractor's Event Staff, to comply with this Section may result in immediate termination of this Agreement. In addition, Contractor may be disqualified from entering into further contracts with the University.

8. Specific Terms and Conditions Applicable to Particular Venues.

a. <u>If theater facilities are reserved</u>:

i. The University shall provide essential stage equipment, lighting and sound, technicians, house management, and custodial services as it deems necessary for the Event, as well as any additional services mutually agreed upon by

the University and the Contractor. The cost of such services shall be borne by the Contractor and are reflected in the fee for use specified in Section III of this Agreement.

ii. The Contractor shall provide ushers, ticket sellers, and ticket collection personnel as deemed necessary by the University's Event Manager. These services may either be arranged through the University's Event Manager or provided by the Contractor. Personnel provided by the Contractor for ushering, ticket selling and ticket taking shall be under the general direction of the University's house management staff and shall arrive at the Event venue for a general training session regarding policies and procedures governing these activities one (1) hour prior to the doors opening for the Event. The Contractor acknowledges and agrees that the failure of such personnel to arrive for this training session on time will delay the opening of the doors for the Event.

iii. Any additional rehearsal and/or dressing room facilities must be specifically included in Section II of this Agreement and the arrangements for set-up or special services in these areas must be made through the University's Event Manager. The cost of such services shall be borne by the Contractor and are reflected in the fee for use specified in Section II of this Agreement.

b. If a gymnasium or other sports facility is reserved:

i. All participants, parents, guests and spectators associated with the Event shall be limited to use of the lobby, venue and spectator stands associated with the venue(s) specified in this Agreement.

ii. If the Space will be used for any athletic competition, sporting event, or other physically demanding activity, the Contractor shall, at its sole cost and expense, ensure that a qualified and certified athletic trainer is present on site for the duration of the Event. Contractor is solely responsible for the acts or omissions of such trainer(s). All trainer(s) must be NATA BOC Certified.

iii. If locker rooms and showers are used, they shall be limited to the "student" locker facilities, unless otherwise specified. The Contractor shall supply or have participants supply their own locks for the lockers and agrees that all lockers shall be cleaned out of all clothing, equipment and supplies after each use, and that all locks shall be removed.

iv. The Contractor shall not permit street shoes to be worn on gym courts or pool decks.

v. The Contractor shall not permit gum chewing on gym courts or in pool areas.

vi. If the Space includes a University pool, Contractor shall provide, at its sole expense, a minimum of one (1) Red Cross certified lifeguard for each thirty (30) participants engaged in swimming activities. Contractor shall provide the University with a copy of the Red Cross certification held by each lifeguard providing life-guarding services vii. Contractor shall bear the entire expense for any and all officials, referees and timekeepers it requires for the Event.

9. Contractor Insurance Requirements.

Commercial General Liability: The University acknowledges that the Contractor is a self-insured municipality. Insurance certificates will be provided for evidence of coverage as a self-insured entity. Contractor shall provide the University a certificate of insurance, evidencing its self-insured status, thirty (30) days prior to the Event, which states that the Contractor is insured for the period of time covered by this Agreement with minimum Commercial General Liability coverage established at: $1,000,000 combined single limit per occurrence for bodily injury, personal injury and property damage coverage. Coverage shall include Premises and Operations, Independent Contractors, Products and Completed Operations, Fire Legal Liability, Contractual Liability and Broad Form Property Damage coverage. If a general aggregate is used, the general aggregate limit shall apply separately to the project or the general aggregate limit shall be twice the occurrence limit. The University of Connecticut and its Board of Trustees and their agents, officers and employees shall be named as Additional Insured. Said certificate of insurance shall indicate the specific dates covered by this Agreement and reference the Event set forth in Section II of this Agreement. The coverage shall contain no special limitations on the scope of protection afforded to the State or the University.

i. If alcoholic beverages are served, but not sold, then host liquor liability coverage should be included within the Commercial General Liability coverage. If alcoholic beverages are sold, then a separate Liquor Liability policy ($1,000,000 limit) is required.

ii. If an event is catered, then the caterer is required to have insurance coverage in the same amount. A Liquor Liability policy is required of the entity that is either serving or providing the alcohol.

b. Automobile Liability: $1,000,000 combined single limit per accident for bodily injury. Coverage extends to owned, hired and non-owned automobiles. If the Contractor does not own a vehicle used in the execution of the Agreement, then only hired and non-owned coverage is required. *[If a vehicle is not used in the execution of the Agreement then automobile coverage is not required.]*

c. Workers' Compensation and Employers Liability: *[If any employees of Contractor are involved in the use of facilities]* Statutory coverage in compliance with the Compensation laws of the State of Connecticut. Coverage shall include Employer's Liability with minimum limits of $100,000 each accident, $500,000 Policy Disease Limit, $100,000 each employee. d. Additional Provisions:

i. The Contractor shall assume any and all deductibles in the described insurance policies.

ii. The Contractor's insurer shall have no right of recovery or subrogation against the State or the University.

iii. Any failure to comply with the reporting provisions of the policy shall not affect coverage provided to the State or the University.

iv. Each required insurance policy shall not be suspended, voided, cancelled or reduced except after 30 days prior written notice by certified mail return receipt, has been given to the University.

v. All coverage is to be written on an "Occurrence" policy form. N/A

vi. The insurance companies providing coverage must have an A-, VII or better rating in the current edition of Best's Key Rating Guide and be licensed to do business in the State of Connecticut.

vii. Contractor shall provide the University with a self-insured certificate of insurance thirty (30) days prior to the event, which states that the contractor is insured for the period of time covered by this Agreement and reference the event and event dates.

viii. If Contractor claims to be a nonprofit agency, it must provide a copy of the appropriate official state or federal certification of that status, thirty (30) days prior to the Event. Failure to provide such certification will result in appropriate changes in Event pricing or cancellation of the reservation. Any documentation and/or certification provided for substantiation that an organization is a nonprofit agency under Connecticut state law shall only constitute verification of eligibility for nonprofit facility use rates, and shall not cover any exemption for Connecticut state sales tax for food purchases related to the Event.

10. University Insurance Requirements.

a. The University shall agree to maintain in force at all times during the contract the following minimum coverages and shall name the City of Waterbury and the Waterbury Board of Education as an Additional Insured on a primary and non-contributory basis to all policies, except Workers Compensation. Insurance shall be written with Carriers approved in the State of Connecticut and with a minimum AM Best's rating of "A-" VIII.

If any policy is written on a "Claims Made" basis, the policy must be continually renewed for a minimum of two (2) years from the completion date of this contract. If the policy is replaced and/or the retroactive date is changed, then the expiring policy must be endorsed to extend the reporting period for claims for the policy in effect during the contract for two (2)years from the completion date.

Original, competed Certificates of Insurances must be presented to the City of Waterbury and the Waterbury Board of Education prior to contract issuance. The University agrees to provide replacement/renewal certificates at least thirty days prior to the expiration date of the policies. Should any of the above –described policies be cancelled, limits reduce or coverage altered, thirty (30) days written notice must be given to the City of Waterbury and the Waterbury Board of Education.

b. The following policies with stated limits shall be maintained, in full force and effect, at all times during which the services are to be performed by the University:

General Liability Insurance:
$1,000,000 Each Occurrence
$2,000,000 General Aggregate
$2,000,000 Products/Completed Operations Aggregate

Excess/Umbrella Liability:
$1,000,000 Each Occurrence
$1,000,000 Aggregate

Professional Liability/E&O:
$1,000,000 Each Wrongful Act
$1,000,000 Aggregate

11. General Provisions.

a. Required State Terms**:** The terms and conditions located at: https://uconncontracts.media.uconn.edu/wpcontent/uploads/sites/458/2022/07/Revenue-Contract-State-Terms-Conditions-revised-01.01.2026.pdf are hereby incorporated by reference in their entirety into this Agreement as if fully set forth herein.

b. Required City Terms:

Prohibition Against Gratuities and Kickbacks (§39.042 of City's Code of Ordinances)

No person shall offer, give, or agree to give any current or former public official, employee or member of a board or commission, or for such current or former public official, employee or member of a board or commission to solicit, demand, accept or agree to accept from another person a gratuity or an offer of employment in connection with any: decision; approval; disapproval; recommendation; preparation of any part of a program requirement or a requisition; influencing the content of any specification or procurement standard; or rendering of advice, investigation, auditing, or in any other advisory capacity in any proceeding or application, request for ruling, determination, claim or controversy, or other particular matter pertaining to any program requirement or a contract or purchase order, or to any solicitation or proposal, therefore.

No person shall make any payment, gratuity, or offer of employment as an inducement for the award of a subcontract or order, by or on behalf of a subcontractor, the prime contractor or higher tier subcontractor or any person associated therewith, under contract or purchase order to the City.

The value of anything transferred or received in violation of the provisions of this Chapter or regulations promulgated hereunder by any person subject to this Chapter may be recovered by the City.

Prohibition Against Contingency Fees (§39.47 of City's Code of Ordinances). The signatory to this Contract hereby represents that the University has not retained anyone to solicit or secure a contract with the City upon an agreement or understanding for a commission, percentage, brokerage or contingency fee.

Responsibility. Each party to this Agreement will be responsible for the negligent acts or omissions of its own employees, officers, or agents in the performance of this Agreement. Neither party will be considered the agent of the other party for the consequences of any negligent act or omission of any person, firms, or corporation not a party to this Agreement. If the conduct of both the parties results in such loss, the responsibility and obligations shall be allocated in proportion to each party's own negligence subject to the extent of any applicable negligence laws. Nothing herein shall be deemed to constitute a waiver by University of any privilege, protection, or immunity otherwise afforded to it under applicable Connecticut law. This provision shall survive termination of this Agreement.

c. Termination:

i. *By Contractor*. The Contractor may terminate this Agreement for any reason at any time upon delivery of written notice of such termination to the University. If the Contractor terminates this Agreement for reasons other than as a result of the University's breach of or failure to observe any provision of this Agreement, the University shall be entitled to retain for its own account, and shall not be obligated to return, any portion of the Usage Fee (including the deposit) previously paid by the Contractor.

ii. *By the University.* The University may terminate this Agreement for any reason at any time upon delivery of written notice of such termination to the Licensee. If the University terminates this Agreement for reasons other than as a result of the Licensee's breach of or failure to observe any provision of this Agreement, the University will return, within a reasonable period of time following such termination, to the Licensee any portion of the Usage Fee (including the Deposit) previously paid by the Licensee. The University shall be entitled to retain for its own account, and shall not be obligated to return, any portion of the Usage Fee (including the Deposit) previously paid by the Licensee if the University terminates this Agreement as a result of the Licensee's breach of or failure to observe any provision of this Agreement.

d. Force Majeure: If the performance of obligations under this Agreement are rendered impossible or hazardous or is otherwise prevented or impaired due to illness, accident, Act(s) of God, riots, strikes, labor difficulties, epidemics, earthquakes, and/or any other cause or event, similar or dissimilar, beyond the control of either party, then each party's obligations to the other under this Agreement shall be excused and neither party shall have any liability to the other under or in connection with this Agreement.

e. Acceptance of Agreement: If a signed original of this Agreement has not been received by University two weeks prior to event, University shall have the right to contract with other parties for use of the space without notice to Contractor.

d. Entire Agreement and Amendment: This Agreement is the entire agreement between the Contractor and the University and supersedes and rescinds all prior agreements relating to the subject matter hereof. This Agreement may be amended only in writing signed by both the Contractor and the University. The Contractor indicates it has read and freely signed this Agreement, which shall take effect as a sealed instrument. The Contractor further certifies that the terms of this Agreement are legally binding and its duly authorized representative has signed this agreement after having carefully read and understood the same.

OFFICE OF THE DIRECTOR OF FINANCE

THE CITY OF WATERBURY

CONNECTICUT

Date: October 8, 2026

To: Michael DiGiovancarlo,
President, Board of Aldermen

Members, Board of Aldermen
Mayor Paul K. Pernerewski, Jr.

From: Michael LeBlanc, Director of Finance MJL

Subject: $3,000,000 Bond Authorization for Milling & Repaving of Streets and Parking Lots

Following a scheduled Public Hearing, kindly give favorable consideration by approving the attached $3,000,000 Bond Authorization which will be used to issue bonds to finance capital costs related to road improvements and parking lot improvements as part of the City's 2027 Milling & Repaving Program.

A capital appropriation of $5,000,000 for this Program was included within the Fiscal 2027 Capital Budget approved on June 2, 2026 with $2,000,000 in funding coming from a Municipal-Grants-In-Aid State Grant and $3,000,000 from a bond to be authorized. The 2027 road milling & repaving program will be overseen by City Engineer, Roy Cavanaugh and his team of engineers. The process will begin with the issuance of a request for proposals in early January 2027. Program costs would include but not be limited to milling & repaving services, subbase repairs, catch basin repairs, ADA accessible sidewalk ramps, materials testing, inspection services, traffic protection, pavement markings, driveway aprons, and other improvements in connection with the Program.

The 2027 Milling & Repaving Program is proposed to be comparable in size to the current 2026 Program to again provide for inclusion of additional collector and arterial roads and to keep pace with rising costs that would otherwise reduce the size of the Program. Mayor Pernerewski is proposing to leverage the $5,000,000 approved in the 2027 Capital Budget to complement $5,500,000 in additional State Municipal Grant-in-Aid funding to provide for $10.5 million in total funding for the 2027 Milling & Repaving Program. Milling & Repaving is considered an eligible use of Municipal Grant-in-Aid funding. A transfer request to commit the 2027 Municipal Grant-in-Aid funding to the 2027 Milling & Repaving Program will be submitted to the Board of Aldermen for consideration at its November 16th meeting.

In accordance with provisions of City Charter, Chapter 10, Section 10-A-2(b), a "Public Hearing" must be held prior to final vote on the bond authorization. The hearing date and time must be published in the local newspaper with at least a seven day advance notice (refer to charter for specifics). I respectfully request that a public hearing on this matter be set for the evening of Monday, November 16th.

RESOLUTION OF THE BOARD OF ALDERMEN AUTHORIZING AN APPROPRIATION OF $3,000,000 FOR APPROVED CAPITAL EXPENSES UNDER THE CAPITAL BUDGET FOR THE MILLING AND PAVING OF STREETS AND PARKING LOTS IN THE CITY OF WATERBURY AND AUTHORIZING THE ISSUANCE OF THE CITY'S GENERAL OBLIGATION BONDS IN AN AMOUNT NOT TO EXCEED $3,000,000 TO FINANCE THE APPROPRIATION

RESOLVED:

Section 1. By the Board of Aldermen of the City of Waterbury (the "City"), that the sum of $3,000,000 be appropriated for the costs associated with the milling and paving of streets and parking lots in the City (the "Project") pursuant to the Mayor's capital budget resolution regarding the implementation of the capital budget of the City for the fiscal year ending June 30, 2027, which capital budget resolution authorized $3,000,000 for the Project and was approved by the Board of Aldermen on June 2, 2026. The Project includes, but is not limited to, milling, repaving, planning, design and construction, improvements, catch basin repairs, ADA sidewalk ramps, materials, testing and inspection services, police and flagger traffic protection, pavement markings, driveway aprons, loops, signs, engineering fees, other professional fees, demolition costs, hazardous materials and disposal costs, renovation costs and all alterations, repairs and improvements in connection therewith, including temporary and permanent financing costs. To meet said appropriation and in lieu of a tax therefor, bonds of the City shall be issued pursuant to the City Charter and Chapter 109 of the Connecticut General Statutes, as amended, or any other provision of law thereto enabling, in an amount not to exceed $3,000,000 or so much thereof as may be necessary exclusive of any grants or other sources of funds separately appropriated for the Project.

Section 2. The bonds may be sold in a single issue or may be consolidated with other authorized but unissued bonds of the City. The bonds shall be issued in fully registered form, be executed in the name and on behalf of the City by the facsimile or manual signatures of the Mayor and the Director of Finance, bear the City seal or a facsimile thereof, be certified and payable at a bank or trust company designated by the Mayor and the Director of Finance which bank or trust company may also be designated as the registrar and transfer agent, and be approved as to their legality by bond counsel to the City. The bonds may be issued in one or more series and in book entry form. The bonds shall be general obligations of the City and each of the bonds shall recite that every requirement of law relating to its issue has been duly complied with, that such bonds are within every debt and other limit prescribed by law, and that the full faith and credit of the City are pledged to the payment of the principal thereof and interest thereon. The aggregate principal amount of bonds to be issued, the annual installments of principal, redemption provisions, if any, the interest rate or rates, form and manner of sale, and other terms, details and particulars of such bonds shall be determined by the Mayor and the Director of Finance in accordance with the Connecticut General Statutes, as amended. The net proceeds of the sale of the bonds, after the payment of the costs of the issuance thereof, shall be applied to the payment of the principal of and interest on all temporary notes issued in anticipation thereof, and thereafter further applied to the purposes of the Project.

Section 3. The bonds may be sold by the Mayor and the Director of Finance in a negotiated underwriting and the Mayor and the Director of Finance are authorized to select the underwriter or underwriters and to enter into, execute and deliver on behalf of the City a contract of purchase for such bonds on such terms and conditions as they shall determine, or, in the alternative, the

bonds may be sold by public sale or sealed proposal as the Mayor and the Director of Finance deem to be in the best interests of the City.

Section 4. The Mayor and the Director of Finance are further authorized to enter into, execute and deliver, on behalf of the City, any agreements they deem reasonable or necessary to provide for and secure credit enhancement for the bonds. The Mayor and Director of Finance are further authorized to enter into and execute, on behalf of the City, any and all security agreements, letters of representation or other agreements, instruments or documents they deem necessary to provide for the sale, security, issuance and delivery of the bonds.

Section 5. The Mayor and the Director of Finance are authorized to appoint a certifying agent, paying agent, transfer agent, registrar, interest rate advisor, trustee and such other advisors and consultants as they may deem necessary or desirable, and to execute and deliver on behalf of the City any and all tax regulatory, continuing disclosure, letter of representation or other agreements they deem necessary to provide for the issuance of such bonds.

Section 6. While it is anticipated that the bonds will qualify as tax-exempt bonds, the Mayor and the Director of Finance are authorized, upon the advice of bond counsel, to issue all or any portion of the bonds as bonds the interest on which is includable in the gross income of the owners thereof for federal income tax purposes, and it is hereby found and determined that the issuance of any such bonds is in the public interest.

Section 7. The Mayor and the Director of Finance are authorized to issue temporary notes in anticipation of the receipt of the proceeds of the bonds and the receipt of any federal, state or other grants-in-aid for the Project. The temporary notes shall be executed in the name and on behalf of the City by the facsimile or manual signatures of the Mayor and the Director of Finance, bear the City seal or a facsimile thereof, be certified and payable at a bank or trust company designated by the Mayor and the Director of Finance which bank or trust company may also be designated as the registrar and transfer agent, and be approved as to their legality by bond counsel to the City. The temporary notes shall be issued with maturity dates in accordance with the Connecticut General Statutes, as amended and in such amounts and form, bear such interest rates and be subject to such terms as determined by the Mayor and the Director of Finance. The temporary notes may be sold by the Mayor and the Director of Finance in a negotiated underwriting and the Mayor and the Director of Finance are authorized to select the underwriter or underwriters and to enter into, execute and deliver on behalf of the City a contract of purchase for such notes on such terms and conditions as they shall determine, or, in the alternative, the temporary notes may be sold by public sale or sealed proposal as the Mayor and the Director of Finance deem to be in the best interests of the City. The temporary notes shall be general obligations of the City and each of the notes shall recite that every requirement of law relating to its issue has been duly complied with, that such notes are within every debt and other limit prescribed by law, and that the full faith and credit of the City are pledged to the payment of the principal thereof and interest thereon. The net interest cost on such temporary notes, including renewals thereof, and the expense of preparing, issuing, and marketing such notes, to the extent paid from the proceeds from the issuance of bonds or additional temporary notes, shall be included as a cost of the Project.

Section 8. The City hereby declares its official intent under Federal Income Tax Regulation Section 1.150-2 that the amounts appropriated under Section 1 hereof may be paid from temporary advances of available funds and that the City reasonably expects to reimburse any such advances from the proceeds of borrowings in an aggregate principal amount not in excess of the amount of borrowing authorized hereby. The Mayor and the Director of Finance are authorized to amend such declaration

of official intent and to bind the City pursuant to such representations and covenants as they deem necessary or advisable in order to maintain the continued exemption from federal income taxation of interest on the bonds or temporary notes authorized by this resolution if issued on a tax-exempt basis, including covenants to pay rebates of investment earnings to the United States in future years.

Section 9. The Mayor and the Director of Finance are hereby authorized, on behalf of the City, to enter into agreements or otherwise covenant for the benefit of bondholders to provide information on an annual or other periodic basis to nationally recognized municipal securities information repositories or state based information repositories (the "Repositories") and to provide notices to the Repositories of material events as enumerated in Securities and Exchange Commission Rule 15c2-12, as amended, as may be necessary, appropriate or desirable to effect the sale of the bonds or temporary notes authorized by this resolution.

Section 10. The Mayor and Director of Finance are authorized to apply for and accept any federal, state or other grants-in-aid for the Project. The Mayor, Director of Finance and other proper officers of the City are authorized to take all actions necessary and proper to carry out the Project and to issue the bonds or temporary notes to finance the appropriation for the Project.

OFFICE OF THE DIRECTOR OF FINANCE

THE CITY OF WATERBURY

CONNECTICUT

Date: October 8, 2026

To: Michael DiGiovancarlo,
President, Board of Aldermen

Members, Board of Aldermen
Mayor Paul K. Pernerewski, Jr.

From: Michael LeBlanc, Director of Finance MJL

Subject: $5,400,000 Bond Authorization for Replacement of Portable & Mobile Radios

Following a scheduled Public Hearing, kindly give favorable consideration by approving the attached Bond Authorization to finance the replacement of portable and mobile radios within the Police Department, Fire Department and Department of Public Works. A capital appropriation of $5,400,000 for this Program was included within the Fiscal 2027 Capital Budget approved on June 2, 2026.

The Police Department, Fire Department & Department of Public Works are seeking to replace and upgrade all portable radios and concurrently replace and upgrade several mobile radios and mutual aid mobile radio stacks. The current radios are reaching end-of-life and end-of-support status, which makes the timing of this upgrade critical in 2027. There have been documented performance deficiencies with the current radios and testing of the new model portable radio has shown significant improvements.

In an effort to reduce the bonding that would ultimately be issued to finance the city-wide replacement of portable and mobile radios, the Administration submitted a Congressional Direct Spending Project Funding Application through Senators Blumenthal and Murphy earlier this year within the DOJ-COPS category. The Application has been submitted to the Appropriations Committee for possible inclusion in a future Senate appropriations bill.

In accordance with provisions of City Charter, Chapter 10, Section 10-A-2(b), a "Public Hearing" must be held prior to final vote on the bond authorization. The hearing date and time must be published in the local newspaper with at least a seven-day advance notice (refer to charter for specifics). I respectfully request that a public hearing on this matter be set for the evening of Monday, November 16th.

RESOLUTION OF THE BOARD OF ALDERMEN AUTHORIZING AN APPROPRIATION OF $5,400,000 FOR APPROVED CAPITAL EXPENSES UNDER THE CAPITAL BUDGET FOR THE PURCHASE OF REPLACEMENT PORTABLE RADIOS AND MOBILE RADIOS FOR THE POLICE DEPARTMENT, FIRE DEPARTMENT AND DEPARTMENT OF PUBLIC WORKS AND AUTHORIZING THE ISSUANCE OF THE CITY'S GENERAL OBLIGATION BONDS IN AN AMOUNT NOT TO EXCEED $5,400,000 TO FINANCE THE APPROPRIATION

RESOLVED:

Section 1. By the Board of Aldermen of the City of Waterbury (the "City"), that the sum of $5,400,000 be appropriated for the purchase of replacement portable radios and mobile radios for the Police Department, Fire Department and Department of Public Works (the "Project") pursuant to the Mayor's capital budget resolution regarding the implementation of the capital budget of the City for the fiscal year ending June 30, 2027, which capital budget resolution authorized $5,400,000 for the Project and was approved by the Board of Aldermen on June 2, 2026. The Project includes costs for equipment, accessories, disposal, installation, configuration services, consultants, performance testing, training and support, and other costs related to the Project, including temporary and permanent financing costs. To meet said appropriation and in lieu of a tax therefor, bonds of the City shall be issued pursuant to the City Charter and Chapter 109 of the Connecticut General Statutes, as amended, or any other provision of law thereto enabling, in an amount not to exceed $5,400,000 or so much thereof as may be necessary after deducting grants or other sources of funds available for the Project.

Section 2. The bonds may be sold in a single issue or may be consolidated with other authorized but unissued bonds of the City. The bonds shall be issued in fully registered form, be executed in the name and on behalf of the City by the facsimile or manual signatures of the Mayor and the Director of Finance, bear the City seal or a facsimile thereof, be certified and payable at a bank or trust company designated by the Mayor and the Director of Finance which bank or trust company may also be designated as the registrar and transfer agent, and be approved as to their legality by bond counsel to the City. The bonds may be issued in one or more series and in book entry form. The bonds shall be general obligations of the City and each of the bonds shall recite that every requirement of law relating to its issue has been duly complied with, that such bonds are within every debt and other limit prescribed by law, and that the full faith and credit of the City are pledged to the payment of the principal thereof and interest thereon. The aggregate principal amount of bonds to be issued, the annual installments of principal, redemption provisions, if any, the interest rate or rates, form and manner of sale, and other terms, details and particulars of such bonds shall be determined by the Mayor and the Director of Finance in accordance with the Connecticut General Statutes, as amended. The net proceeds of the sale of the bonds, after the payment of the costs of the issuance thereof, shall be applied to the payment of the principal of and interest on all temporary notes issued in anticipation thereof, and thereafter further applied to the purposes of the Project.

Section 3. The bonds may be sold by the Mayor and the Director of Finance in a negotiated underwriting and the Mayor and the Director of Finance are authorized to select the underwriter or underwriters and to enter into, execute and deliver on behalf of the City a contract of purchase for such bonds on such terms and conditions as they shall determine, or, in the alternative, the bonds may be sold by public sale or sealed proposal as the Mayor and the Director of Finance

deem to be in the best interests of the City.

Section 4. The Mayor and the Director of Finance are further authorized to enter into, execute and deliver, on behalf of the City, any agreements they deem reasonable or necessary to provide for and secure credit enhancement for the bonds. The Mayor and Director of Finance are further authorized to enter into and execute, on behalf of the City, any and all security agreements, letters of representation or other agreements, instruments or documents they deem necessary to provide for the sale, security, issuance and delivery of the bonds.

Section 5. The Mayor and the Director of Finance are authorized to appoint a certifying agent, paying agent, transfer agent, registrar, interest rate advisor, trustee and such other advisors and consultants as they may deem necessary or desirable, and to execute and deliver on behalf of the City any and all tax regulatory, continuing disclosure, letter of representation or other agreements they deem necessary to provide for the issuance of such bonds.

Section 6. While it is anticipated that the bonds will qualify as tax-exempt bonds, the Mayor and the Director of Finance are authorized, upon the advice of bond counsel, to issue all or any portion of the bonds as bonds the interest on which is includable in the gross income of the owners thereof for federal income tax purposes, and it is hereby found and determined that the issuance of any such bonds is in the public interest.

Section 7. The Mayor and the Director of Finance are authorized to issue temporary notes in anticipation of the receipt of the proceeds of the bonds and the receipt of any federal, state or other grants-in-aid for the Project. The temporary notes shall be executed in the name and on behalf of the City by the facsimile or manual signatures of the Mayor and the Director of Finance, bear the City seal or a facsimile thereof, be certified and payable at a bank or trust company designated by the Mayor and the Director of Finance which bank or trust company may also be designated as the registrar and transfer agent, and be approved as to their legality by bond counsel to the City. The temporary notes shall be issued with maturity dates in accordance with the Connecticut General Statutes, as amended and in such amounts and form, bear such interest rates and be subject to such terms as determined by the Mayor and the Director of Finance. The temporary notes may be sold by the Mayor and the Director of Finance in a negotiated underwriting and the Mayor and the Director of Finance are authorized to select the underwriter or underwriters and to enter into, execute and deliver on behalf of the City a contract of purchase for such notes on such terms and conditions as they shall determine, or, in the alternative, the temporary notes may be sold by public sale or sealed proposal as the Mayor and the Director of Finance deem to be in the best interests of the City. The temporary notes shall be general obligations of the City and each of the notes shall recite that every requirement of law relating to its issue has been duly complied with, that such notes are within every debt and other limit prescribed by law, and that the full faith and credit of the City are pledged to the payment of the principal thereof and interest thereon. The net interest cost on such temporary notes, including renewals thereof, and the expense of preparing, issuing, and marketing such notes, to the extent paid from the proceeds from the issuance of bonds or additional temporary notes, shall be included as a cost of the Project.

Section 8. The City hereby declares its official intent under Federal Income Tax Regulation Section 1.150-2 that the amounts appropriated under Section 1 hereof may be paid from temporary advances of available funds and that the City reasonably expects to reimburse any such advances from the proceeds of borrowings in an aggregate principal amount not in excess of the amount of borrowing authorized hereby. The Mayor and the Director of Finance are authorized to amend such declaration of official intent and to bind the City pursuant to such representations and covenants as they deem

necessary or advisable in order to maintain the continued exemption from federal income taxation of interest on the bonds or temporary notes authorized by this resolution if issued on a tax-exempt basis, including covenants to pay rebates of investment earnings to the United States in future years.

Section 9. The Mayor and the Director of Finance are hereby authorized, on behalf of the City, to enter into agreements or otherwise covenant for the benefit of bondholders to provide information on an annual or other periodic basis to nationally recognized municipal securities information repositories or state based information repositories (the "Repositories") and to provide notices to the Repositories of material events as enumerated in Securities and Exchange Commission Rule 15c2-12, as amended, as may be necessary, appropriate or desirable to effect the sale of the bonds or temporary notes authorized by this resolution.

Section 10. The Mayor and Director of Finance are authorized to apply for and accept any federal, state or other grants-in-aid for the Project. The Mayor, Director of Finance and other proper officers of the City are authorized to take all actions necessary and proper to carry out the Project and to issue the bonds or temporary notes to finance the appropriation for the Project.



OFFICE OF THE DIRECTOR OF FINANCE
THE CITY OF WATERBURY
CONNECTICUT

Date: October 8, 2026

To: Mr. Michael DiGiovancarlo
President, Board of Aldermen

Members, Board of Aldermen
Mayor Paul K. Pernerewski, Jr.

From: Michael LeBlanc, Director of Finance & WPC Primary Representative MJL
Denis Cuevas, Business Manager, JACOBS

Re: Construction Contract for Trumpet Brook Sewer Relocation between The City of Waterbury and Coastline Construction Corp

Kindly give favorable consideration by approving the above referenced Construction Contract for Trumpet Brook Sewer Relocation between the City of Waterbury and Coastline Construction Corporation of Clinton, CT in the amount of $2,500,000 which includes an Owner Controlled Contingency in the amount of $113,000.

The scope of work involves the installing approximately 225 linear feet of 10-inch diameter ductile iron sanitary sewer main, 180 linear feet of 10-inch diameter PVC sanitary sewer main, 645 linear feet of 15-inch diameter PVC sanitary sewer main and nine new sanitary sewer manholes as indicated on the Contract Drawings. In addition, connecting new sanitary sewer main to existing manholes at each end of the project limits, reconnecting sewer laterals for properties within the project limits, replacing approximately 300 linear feet of 18-inch diameter RCP storm drain and two storm manholes as indicated in the Contract Drawings.

This contract was initiated under the Request for Proposal process (RFP No. 8665). Four firms, Coastline, Grasso, Baltazar and Ludlow, were called back for an in-person interview with the selection committee. The interviews were held on Thursday, September 17, 2026, in City Hall. All four firms provided a brief description of their company history, similar project experience, and proceeded to describe their approach to the project. Each firm presented a preliminary schedule of construction activities including mobilization, site preparation, excavation, sewer relocation, backfilling, and restoration. The Selection Committee recommended awarding the contract to Coastline Construction Corporation.

Substantially Complete all work and services required under this Contract within THREE HUNDRED SIXTY-FIVE (365) consecutive calendar days of the City's written Notice to Proceed and shall reach Final Completion of all work and services required under this Contract within FOUR HUNDRED FIFTY-FIVE (455) consecutive calendar days of the City's written Notice to Proceed

Coastline has more than 35 years of experience performing underground utility construction throughout Connecticut. The firm demonstrated extensive expertise in installing, repairing, and rehabilitating sewer systems utilizing both PVC and ductile iron piping in various municipal and commercial applications. The firm also demonstrated the resources and staffing necessary to manage multiple projects concurrently while maintaining the proposed construction schedule. Coastline demonstrated understanding of the project requirements, relevant experience, detailed project approach, well-developed construction schedule, and comprehensive safety program and ultimately the proposed lowest cost bid.

Please note further, that one "record copy" of the Agreement Documents (including Technical Specifications, General Conditions, Special Conditions and Drawings), the contract and all related attachments has been placed on file with the City's Clerk Office. Lastly, please be advised that Jacobs Engineering Group will have a representative present at your upcoming meeting to answer any questions you may have regarding this matter.

CONSTRUCTION CONTRACT
for

WATER POLLUTION CONTROL FACILITY

TRUMPET BROOK SEWER RELOCATION
between

The City of Waterbury, Connecticut
and
COASTLINE CONSTRUCTION CORP.

THIS CONTRACT, effective on the date signed by the Mayor, is by and between the CITY OF WATERBURY, City Hall, 235 Grand Street, Waterbury, Connecticut 06702 (the "City") and COASTLINE CONSTRUCTION CORP., located at 24 LONG HILL RD., CLINTON, CT 06413, a State of Connecticut duly registered domestic corporation (the "Contractor").

WHEREAS, the Contractor submitted a Proposal to the City in response to **Request for Proposal ("RFP") Number 8665** for **TRUMPET BROOK SEWER RELOCATION**; and,

WHEREAS, the City accepted the Contractor's Proposal for **RFP Number 8665**; and,

WHEREAS, the City desires to obtain the Contractor's services for **TRUMPET BROOK SEWER RELOCATION** pursuant to the terms set forth in this Contract (the "Project").

NOW THEREFORE, THE PARTIES AGREE AND COVENANT AS FOLLOWS:

1. Scope of Services. The Contractor shall furnish all of the labor, services, equipment, materials, supplies, transportation, and incidentals necessary to complete the Project as specified in this agreement (also referred to herein as "Contract") and such shall be completed in a satisfactory manner, as reasonably determined by the City. All labor, services, equipment, materials, supplies, transportation, and incidentals shall comply with **(i)** any and all applicable local, state and federal laws, statutes, ordinances, rules and regulations, including without limitation all notice requirements thereunder, and **(ii)** generally accepted professional standards.

1.1. The Project consists of **TRUMPET BROOK SEWER RELOCATION** as detailed and described in the Proposal Documents in **Attachment A** and are hereby made material provisions of this Contract. **Attachment A** shall consist of the following, which are

attached hereto, are acknowledged by the Contractor as having been received, or otherwise hereby incorporated by reference as noted below, and all are made a part hereof:

1.1.1 **RFP Number 8665** (acknowledged by the Contractor as having been received and incorporated by reference);

1.1.2 **RFP Number 8665** Addendum #1, dated July 30, 2026 and consisting of 12 pages (acknowledged by the Contractor as having been received and incorporated by reference);

1.1.3 Contractor's Proposal consisting of 31 pages, including Contractor's Price Proposal, dated August 6, 2026 and consisting of 3 pages submitted in response to **RFP Number 8665** (attached hereto);

1.1.4 Annual Statement of Financial Interests; Disclosure and Affidavit Re: Outstanding Obligations to the City; Debarment Certification; Corporate Resolution, Non-Collusive Affidavit (incorporated by reference);

1.1.5 Certificates of Insurance (attached hereto);

1.1.6 Performance Bond and Payment Bond (attached hereto);

1.1.7 Technical Specifications consisting of 210 pages (attached hereto);

1.1.8 Drawings prepared by Jacobs entitled "Trumpet Brook Sanitary Sewer Relocation," consisting of 18 sheets and dated May 2026 (attached hereto);

1.1.9 Special Conditions (Article 1 – Article 32) consisting of 20 pages (attached hereto);

1.1.10 General Conditions (Article 1 – Article 113) consisting of 36 pages (attached hereto);

1.1.11 State Wage Rate Documentation (attached hereto);

1.1.12 City of Waterbury Good Jobs Ordinance (attached hereto);

1.1.13 Any and all amendment(s) and Change Orders issued by the City after execution of Contract (incorporated by reference);

1.1.14 All applicable Federal, State and local statutes, regulations, charter and ordinances (incorporated by reference), and

1.1.15 All permits (including, but not limited to, City of Waterbury Building permit(s)) and licenses (incorporated by reference).

1.2. The entirety of **Attachment A** plus this executed instrument are together deemed the Contract Documents (hereinafter collectively referred to as "Contract Documents"). The City's record copy of the Contract Documents shall control and shall be effective and binding on the Contractor. In the event that any provision in the Contract Documents conflict with any other provision therein, the provision in the component part of the Contract Document first enumerated below shall govern over any other component part which follows it numerically.

1.2.1 Federal laws and regulations
1.2.2 State, and local laws, regulations, charter and ordinances
1.2.3 Contract Amendment(s) and Change Orders
1.2.4 Contract
1.2.5 Contractor's Price Proposal Form
1.2.6 Special Conditions
1.2.7 General Conditions
1.2.8 Technical Specifications
1.2.9 Drawings
1.2.10 **RFP Number 8665** documents not otherwise listed above in 1.2.1-1.2.9

2. Representations Regarding Qualification and Accreditation. The Contractor represents that its employees are licensed to perform the scope of work set forth in this Contract. The Contractor further represents that its employees have the requisite skill, expertise and knowledge necessary to perform the scope of work required under the terms of this Contract, including any supplementary work and the City relies upon Contractor's representations.

2.1. Representations regarding Personnel. The Contractor represents that it has, or will secure at its own expense, all personnel required to perform the services under this Contract. Such personnel shall not be employees of or have any contractual relationship with the City, unless use of City employees or of personnel having a Revcontractual relationship with the City is approved in writing. As set forth above, all the services required hereunder shall be performed by the Contractor or under its supervision and all personnel engaged in the work shall be fully qualified and shall be authorized or permitted under state or local law to perform such services.

2.2. Representations regarding Qualifications. The Consultant hereby represents that, to the extent required by Federal, State and Local statutes, regulations, codes, ordinances, and policies, that the Consultant and/or its employees be licensed, certified, registered, or otherwise qualified, the Consultant and all employees providing services under this Contract, are in full compliance with those statutes, regulations and

ordinances. Upon City request, the Consultant shall provide to the City a copy of the Consultant's licenses, certifications, registrations, etc.

3. Responsibilities of the Contractor. The Contractor agrees to properly implement the services required in the manner herein provided. The Contractor shall, in addition to any other responsibilities set forth in this Contract and the Schedules and Attachments hereto, perform the following coincident with the performance of this Contract:

3.1. Due Diligence Obligation. The Contractor acknowledges its responsibilities to examine and to be thoroughly familiar with the City's bid document, including, but not limited to the plans, specifications, drawings and any addenda thereto. The Contractor hereby warrants and represents that prior to the submission of its proposal during the bid process it reviewed or was afforded opportunity, by the City, to review all physical items, facilities, services and functions essential to the satisfactory performance of the services required ("Due Diligence") and thereby certifies that all such items facilities, services and functions are included in this Contract and thereby warrants that:

3.1.1 it conducted or had opportunity to conduct all due diligence prior to the submission of its bid and, accordingly, any additional costs, services or products resulting from the failure of the Contractor to complete Due Diligence prior to submission of its bid proposal shall be borne by the Contractor. Furthermore, the Contractor had the opportunity during the bid process to ask questions it saw fit and to review the responses from the City;

3.1.2 its failure or omission to make investigation and verification of data shall, in no way, be cause for future claim of ignorance of such data or conditions nor shall such failure to investigate and verify be the basis for any claim whatsoever, monetary or otherwise;

3.1.3 it is solely responsible for resolving any issues resulting from its failure to conduct due diligence and it shall assume any and all resulting costs it incurs during the Project;

3.1.4 it was responsible for specifying any changes and disclosing any associated new costs prior to submittal of its bid. In the event the Contractor failed to disclose any such new cost prior to the submittal of its bid, the Contractor hereby covenants that it shall remain solely responsible for, and shall absorb, those non-disclosed costs;

3.1.5 it has familiarized itself with the nature and extent of the Contract Documents, Project, locality, and with all local conditions and Federal, State and local laws, ordinances, rules and regulations that in any manner may affect cost, progress or performance of the Project;

3.1.6 it has given the City written notice of any conflict, error or discrepancy that the Contractor discovered in the City's bid documents and other documents for **RFP Number 8665** (collectively "Proposal Documents");

3.1.7. it agrees that the Proposal Documents are sufficient in scope and detail to indicate and convey understanding of all terms and conditions for performance of the Project;

3.1.8. it has studied carefully all reports of investigations and tests of subsurface and latent physical conditions at the site or otherwise affecting cost, progress or performance of the Scope of Services which were utilized in the preparation of the plans and specifications;

3.1.9 it has made or caused to be made examinations, investigations, measurements and tests and studies of any applicable reports and related data as it deems necessary for ensuring performance of the Scope of Services at the Contract Price within the Contract Time and in accordance with the other terms and conditions of the Contracts; and certifies no additional examinations, investigations, tests, reports or similar data are or will be required by Contractor for such purposes; and

3.1.10 The Contractor shall not take advantage of any obvious error or apparent discrepancy in the Contract. Notice of any error or discrepancy discovered shall be given immediately in writing to the City, who shall make such corrections and interpretations as it may deem necessary for the completion of the Project in a satisfactory and acceptable manner.

3.2. Safety. Contractor shall perform all work in a safe manner in full compliance with local, state and federal health and safety regulations. Contractor shall immediately correct any dangerous condition caused by or resulting from its work. If it fails to correct, or to act diligently to correct, any condition which the City reasonably believes to be a hazard to persons or property, then immediately upon oral or written notice to any supervisory or similar personnel of Contractor, City may, but shall not be required to, correct same at Contractor's expense. City shall confirm in writing any oral notice given within five (5) business days thereafter.

3.3. Storage. In the event the Project site has insufficient, inadequate, and/or improper storage space, it shall be the responsibility of the Contractor to secure, provide and maintain at the Contractor's sole cost and expense **(i)** adequate off-site storage space for equipment, materials, incidentals, etc., and **(ii)** all associated delivery and transportation services. In either event, the Contractor shall assume full responsibility for equipment, materials, incidentals, etc. until both title and risk of loss pass to the City pursuant to Section 8 of this Contract.

3.4. Working Hours. To the extent the Contractor is required to be on City property to render the Contractor's services hereunder, the Contractor shall coordinate its schedule so that work on and at the Project site is performed during the hours of 7:00 a.m. and 6:00 p.m. Monday through Friday and 9:00 a.m. to 6:00 p.m. on Saturday, Sunday and legal holidays unless more exactly specified elsewhere in this Contract or **Attachment A** or unless prior written permission is obtained from the City to work during other times. This provision shall not excuse the Contractor from timely performance under the Contract.

3.5. Cleaning Up. The Contractor shall at all times keep the Project site free from accumulation of waste materials or rubbish caused by Contractor's employees or subcontractors, and at the completion of the work shall remove all rubbish from and about the Project and all tools, scaffolding and surplus materials and shall leave the Project site "broom clean" or its equivalent, unless more exactly specified. In case of dispute, the City may remove the rubbish and charge the cost to the Contractor.

3.6. Publicity. Contractor agrees not to deliberately disclose the fact that the City has entered into or terminated this Contract or disclose any of the terms of the Contract or use the City's name in connection with any publicity, unless the City gives prior written consent to such use of the City's name in each instance.

3.7. Standard of Performance. All Contractor labor, materials, supplies, components, equipment, reports, plans, specifications, drawings, deliverables, incidentals, etc., required to be furnished or delivered under this Contract shall conform in all respects with the requirements set forth in this Contract and shall meet or exceed those standards generally recognized in the Contractor's craft and trade in the State of Connecticut. City specified manufacturer and/or brand name substitution desired by the Contractor shall be made only with the prior written consent of an authorized representative of the City's Using Agency.

3.7.1 In carrying out the Project, the Contractor must employ such methods or means as will not cause any interruption of or interference with the work of any other contractor, nor with the normal routine of the institution or agency operating at the Project site.

3.8. Contractor's Employees. The Contractor shall at all times enforce strict discipline and good order among its employees, and shall not employ on the work any unfit person or anyone not skilled in the work assigned. The Contractor shall not, without the prior written approval of the City's Using Agency, substitute, terminate, replace or otherwise remove any Contractor employee expressly named, identified or required in this Contract.

3.9. Subsurface/Unknown Site Conditions. If Project site conditions are encountered which are **(i)** subsurface or otherwise concealed physical conditions or

other conditions which differ materially from those indicated in the Contract Documents, or **(ii)** unknown conditions of an unusual nature which differ materially from those ordinarily found to exist and generally recognized as inherent or common in construction activities of the character provided for in this Contract, then prompt notice by the observing party shall be given to the other party to this Contract before Project site conditions may be disturbed. The Contractor shall thereafter wait for written instructions from the City before proceeding with regard to such conditions.

3.10. Surveys. All surveys required under this Contract shall be performed by a State of Connecticut duly licensed land surveyor. Unless expressly stated to the contrary in Section 1 of this Contract and **Attachment A**, the Contractor shall perform all layout work, all field measurements and all construction staking required, necessary or prudent for the satisfactory prosecution of the Contractor's obligations under this Contract.

3.11. Permits and Licenses. Unless expressly stated to the contrary in Section 1 of this Contract and **Attachment A**, the Contractor shall secure and obtain all permits and all licenses required, or necessary, or prudent for the performance of the Contractor's obligations under this Contract and for the City's occupancy, use, and operation of the Project.

3.12. Manufacturer's Directions. Where it is required in this Contract that materials, products, processes, equipment or the like be installed or applied in accord with manufacturer's directions, specifications or instructions, it shall be construed to mean that the said application or installation by the Contractor shall be in strict accord with printed instructions furnished by the manufacturer of the material concerned for use under conditions similar to those at the Project site. One (1) copy of such instructions shall be furnished to the City.

3.13. Review by the City. The Contractor shall permit the City and the City's duly authorized representatives and agents to review, at any time, all work performed under the terms of this Contract at any stage of the Project.

3.14. Records Maintenance. The Contractor shall maintain or cause to be maintained complete records documenting compliance with its obligations under the Connecticut General Statutes, the regulations of the Commission on Human Rights and Opportunities, and this Contract, including records of good-faith-efforts, subcontractor solicitations, bids received, awards, payments, documents relative to charges, costs, expenses fees, alleged breaches of contract, settlement of claims or other matters pertaining to the Contractor's demand for payment, workforce information, certifications, correspondence and filings with the Commission on Human Rights and Opportunities, for the period required by applicable law and regulations of the Commission on Human Rights and Opportunities.

4. Responsibilities of the City and City Reservation of Rights. Upon the City's receipt of Contractor's written request for specific information, the City will provide the Contractor with existing documents, data and other materials the City agrees are necessary and appropriate to the services to be performed by the Contractor hereunder and the City will endeavor to secure, where feasible and where the City agrees it is necessary and appropriate, materials or information from other sources requested by the Contractor for the purpose of carrying out the services under this Contract.

4.1. The City may, in its sole discretion, designate person(s) to act as the City's Project Engineer(s) and/or Manager(s) and the City may, in its sole discretion, define such person(s) authority and responsibilities.

4.2. The City reserves the right to **(i)** perform work related or unrelated to the Project with the City's own forces adjoining, adjacent to, or in the vicinity of, the Project site and/or **(ii)** let separate contracts related or unrelated to the Project for work and services adjoining, adjacent to, or in the vicinity of, the Project site. In such event, the Contractor shall afford all such parties reasonable opportunity for storage of materials and equipment and for the uninterrupted provision and delivery of such parties' work and/or services. The Contractor shall cooperate with such parties and in the case of a dispute, the decision of the City shall be complied with by all.

5. Contract Time. The Contractor shall Substantially Complete all work and services required under this Contract within **THREE HUNDRED SIXTY-FIVE (365)** consecutive calendar days of the City's written Notice to Proceed and shall reach Final Completion of all work and services required under this Contract within **FOUR HUNDRED FIFTY-FIVE (455)** consecutive calendar days of the City's written Notice to Proceed (hereinafter referred to as “Contract Time").

5.1. Within one (1) week of the City’s issuance of its written notice to proceed, and prior to the commencement of any work on the Project site, the Contractor shall submit for the City’s written approval a construction progress schedule. On a monthly basis, the Contractor shall deliver to the City a written status report setting forth an analysis and critique of the Contractor's compliance with said schedule.

5.2. Delay Damages

5.2.1 Time is and shall be of the essence for all Project Phase Completion Dates, Milestones, Substantial and Final Completion Date. The Contractor further agrees that the Project shall be prosecuted regularly, diligently and uninterruptedly and at such rate of progress as will ensure full completion thereof within the Contract time stated above. It is expressly understood and agreed, by and between the Contractor and City, that the Phase Completion Dates, Milestones, Substantial and Final Completion Date are reasonable for the completion of the Project.

5.2.1.1 The Contractor shall pay to the City the sum of the greater of **SEVEN HUNDRED FIFTY DOLLARS AND ZERO CENTS ($750.00)** per calendar day for each and every calendar day for which the Contractor is in default in completing the work beyond the Final Completion Date, Substantial Completion Date, Milestones and Phase Completion Dates, as set forth in Section 5, or the actual damages incurred by the City caused by the delay. The preceding sum is hereby agreed upon not as a penalty, but as delay damages for the delay that the City shall suffer due to such default.

5.2.1.2 The City shall have the right to recover all damages pursuant to any remedy at law or equity including but not limited to deducting the amount of any such damages from any monies due the Contractor under this Contract. The Contractor understands that if the entire Work or of any portion of the Work that the City has agreed to accept separately, if any, is not attained by the applicable completion dates as set forth in the entire Section 5, the City will suffer damages, which are difficult to specify accurately and ascertain. Delay damages based upon delay shall be assessed to compensate the City for all actual loss sustained by the delay, including, but not limited to, loss of use, increased cost of material or services to complete the project, loss of State funding, all other another actual expense, and all other damages allowed by law, including attorney's fees.

5.3 No Damage for Delay

5.3.1 In no event shall the Contractor be entitled to any compensation or recovery of any damages in connection with any Delay, including, without limitation, consequential damages, lost opportunity damages, attorney's fees or other, similar remuneration. The City's exercise of any of its rights or remedies under the Contract Documents, including without limitation, ordering changes in the Work, or directing suspension, rescheduling or correction of the Work, regardless of the extent or frequency of the City's exercise of these rights has been contemplated by the parties and shall not be construed as an exception.

5.3.2 DELAY CLAIMS DUE TO INABILITY TO PROCURE MATERIALS IN A TIMELY MANNER WILL NOT BE ACKNOWLEDGED OR ACCEPTED.

6. Compensation. The City shall compensate the Contractor for satisfactory provision of all of the goods and services set forth in this Contract as follows in this Section 6. No claims for additional compensation will be considered for conditions made known to the Contractor prior to bidding. No claims for additional compensation will be considered on account of failure of the Contractor to completely inform itself as required herein above.

6.1. Fee Schedule. Subject to retainage, limitations, etc. set forth below in this Section 6, the fee payable to the Contractor shall not exceed **TWO MILLION FIVE HUNDRED THOUSAND DOLLARS AND ZERO CENTS ($2,500,000.00)** (hereafter referred to as "Total Compensation") with the basis for payment being Contractor's Proposal set forth in **Attachment A's** "Contractor's Proposal, dated August 6, 2026", which is summarized below:

i. $ 2,387.000.00 ….(Bid Item No. 1 – Bid Item 18.0)

AND

ii. $ 113,000.00....(Owner Controlled Contingency Allowance, only to be used upon prior written approval of the City's WPC Primary Representative)

6.2. Retainage. At the City's sole discretion, it hereby reserves the right to withhold as retainage five percent (5.0 %) of any payment (or monetary sum otherwise required by law) owed to the Contractor to be withheld from payments to the Contractor otherwise payable to the Contractor until such time as the Contractor's work and services to be provided under this Contact are fully completed and accepted in writing by the City. The retainage does not does not include additional sums that the City may withhold due to the Contractor's failure to comply with provisions of this Contract.

6.2.1 On public works contracts valued at one million dollars or more or for projects for which a construction manager has entered into a public works contract providing for a guaranteed maximum price valued at one hundred fifty thousand dollars or more, C.G.S. § 46a-68e requires that the awarding agency "shall withhold two percent of the total contract price per month from any payment made to such contractor until such time as the contractor has submitted all compliance reports required by the Commission." The term "awarding agency" is defined by C.G.S. § 4a-60g as "a state agency or political subdivision of the state, including a municipality or quasi-public agency.

6.2.2 Contractor is hereby put on notice that CHRO's written approval is required prior to the City releasing withheld retainage per Section 6.2.1.

6.2.3 The two percent (2.0 %) provided in Section 6.2.1 is part of the five percent (5.0 %) retainage provided in Section 6.2, not in addition to such retainage.

6.3. Limitation of Payment. Compensation to the Contractor is limited to those fees set forth in Section 6.1. of this Contract and is further limited to work **(i)** performed in fact, **(ii)** conforming with this Contract, and **(iii)** accepted in writing by a duly authorized City employee. Such compensation shall be paid by the City upon its review and approval of the Contractor's invoices for payment and review of the Contractor's work.

6.3.1 Funding. In the event this Contract is funded, in whole or in part, by Federal and/or State monies, grants, loans, etc, all City payment(s) shall fully comply with all relevant Federal and State statutes and regulations. In the event this Contract is 100% funded by Federal and/or State monies, grants, loans, etc., the aggregate sum of all City payments shall not exceed the aggregate sum of such funding.

6.3.2 The Contractor and its affiliates are hereby provided with notice that the City reserves the right, in the City's sole discretion, to offset, withhold, or otherwise reduce City payment(s) to the Contractor, in an amount equaling the sum or sums of money the Contractor and/or its affiliates is/are, or become delinquent or in arrears on, regarding the Vendor's and/or its affiliates real and personal property taxes and other payment obligations to the City.

6.3.3 No Payment for Lost Profits. In no event shall the City be obligated to pay or otherwise compensate the Contractor for any lost or expected future profits.

6.4. Proposal Costs. All costs of the Contractor in preparing its bid for **RFP Number 8665** shall be solely borne by the Contractor and are not included in the compensation to be paid by the City to the Contractor under this Contract or any other agreement.

6.5. Payment for Services, Materials, Appliances, Employees. The Contractor shall be responsible to the City for the suitability of services, materials and equipment furnished to comply fully with the requirements set forth in this Contract. The Contractor shall promptly pay all employees as their pay falls due, shall pay promptly as they fall due all bills for subcontractors, materials, supplies and services going into the work, and all bills for insurance, bonds, Worker's Compensation coverage, Federal and State Unemployment Compensation, and Social Security charges applicable to this Project. Before final City payment is made, the Contractor shall furnish to the City a sworn, notarized, affidavit stating that all of the foregoing payment obligations have been fully completed. Additionally, during the Project, at the City's option, it may require partial waivers of lien and claim from the Contractor and all subcontractors and materialmen with each payment application.

6.6. Liens. Neither the City's final payment nor any part of the retained percentage, if any, shall become due until the Contractor shall deliver to the City a complete release of all liens arising out of this Contract, or receipts in full in lieu thereof, and in either case, an affidavit that so far as the Contractor has knowledge or information, the releases and receipts include all the labor and material for which a lien could be filed; but the Contractor may, if any subcontractor refuses to furnish a release or receipt in full, furnish a bond satisfactory to the City, to indemnify it against any lien. If any lien

remains unsatisfied after all payments are made, the Contractor shall refund to the City all moneys that the City may be compelled to pay in discharging such a lien, including all costs and a reasonable attorney's fee.

6.7. Contractor's Certificate of Completion. Upon the Contractor's **(i)** completion of all Project milestones, and **(ii)** Substantial Completion of the Project, and **(iii)** Final Completion of the Project, the Contractor shall, in each instance, file with the City a written, notarized affidavit setting forth the amount of Project work performed. The City reserves the right to verify or challenge by any reasonable means the accuracy of said affidavit.

6.8. Final Payment. All prior estimates and City payments, including those relating to extra or additional work, retainage(s), and holdback(s), shall be subject to correction by this final payment which is throughout this Contract called "Final Payment". No payment, final or partial, shall act as a release to the Contractor or its surety from any Contractor obligation(s) under this Contract.

6.9. Clean Water Fund Project Requirements. In the event this Contract is funded in whole or in part, is reliant upon, or falls within the jurisdiction of the Clean Water Fund and its statutes, regulations and rules, the Contractor shall:

6.9.1 submit Applications for Payment in accordance with the following:

The City must receive the Contractor's Application for Payment by the City's or its designee's, review and recommendation for payment, by the fifteenth calendar day of the month to receive payment within the next 50 days. If not received by the fifteenth calendar day of the month, payment can not be made until 50 days after the fifteenth calendar day of the subsequent month. The Contractor shall provide at the City's request, reasonable documentation to substantiate Contractor's Application for Payment.

6.9.2 Progress and Final Payments

The City will make progress payments on account of the Contract Price on the basis of the Contractor's Applications for Payment, monthly during construction as provided below. All progress payments will be on the basis of the progress of the Scope of Services as determined by the City, according to the schedule of values provided for in the Contract Documents, and approved by the City. Prior to Substantial Completion, progress payments will be limited to an amount equal to 95 percent of the value of the Scope of Services completed. Upon Substantial Completion, the City will pay the amount as specified in the Contract Documents.

7. Warranty of the Contractor. The Contractor warrants to the City that all materials, supplies, components, equipment, etc. furnished under this Contract shall be new and of good quality, except as otherwise expressly stated and permitted by the City elsewhere in this Contract. The Contractor warrants that none of its work shall be defective. The Contractor shall be liable to repair and install and/or replace without charge any service, component, equipment or part thereof which is defective or does not conform with this Contract within the greater of **(i) three hundred sixty-five (365)** calendar days after the City delivers its written notice of its acceptance of the Project and statement therein establishing the final completion date, or **(ii)** that time period or date expressly stated elsewhere in this Contract or **Attachment A**.

7.1. The Contractor further warrants that all materials, supplies, services, components, equipment, reports, plans, drawings, deliverables, incidentals, etc., shall be free from any and all defects caused by faulty design, faulty material or poor workmanship. The Contractor shall supply to the City copies of any written manufacturer's warranties and guarantees. The Contractor's foregoing warranty obligations are in addition to, and not a limitation of, all manufacturer's warranties and guarantees, and any other remedy stated in this contract or otherwise available to the City under applicable law.

8. Passing of Title and Risk of Loss.

8.1. City beneficial use of Project equipment, materials, site-work, etc. prior to the Contractor's final completion of the Project or prior to the City's final payment for the Project shall neither act to vest title in the City nor act to transfer risk of loss from the Contractor to the City. Said title and risk shall pass to the City upon the City's final payment for the Project.

8.2. Contractor and its insurer shall assume the risks of loss or damage to the equipment up to and including the date title passes, except that City shall be responsible for loss or damage caused by City's gross negligence.

8.3. After Project equipment, materials, etc. are delivered to the Project work-site and become operable or functional, the Contractor shall not thereafter remove any such equipment, materials, etc. from the Project work-site without securing the prior written consent of an authorized City Using Agency employee.

9. Indemnification.

9.1. The Contractor shall indemnify, defend, and hold harmless the City, City's Boards, and Board of Education, commissions, agents, officials and employees from and against all claims, suits, damages, losses, judgments, costs and expenses including attorney's fees arising out of or resulting from the delivery of the labor, services, equipment, materials, reports, plans, specifications, design, drawings, deliverables,

incidentals, etc. provided that any such claims, suits, damages, losses, judgments, costs or expenses **(i)** are attributable to bodily injury, sickness, disease or death, or to injury to or destruction of tangible property, including the loss of use resulting there from, **(ii)** are alleged to be caused in whole or in part by any willful, intentional, negligent, or reckless act or omission of the Contractor, its employees, any subcontractor or consultant, anyone directly or indirectly employed by any of them or anyone for whose acts any of them may be liable, regardless of whether or not it is caused in part by a party indemnified hereunder; **(iii)** enforcement action or any claim for breach of the Contractor 's duties hereunder or **(iv)** claim for intangible loss(es) including but not limited to business losses, lost profits or revenue, regardless of whether or not it is caused in part by a party indemnified hereunder.

9.2. In any and all claims against the City, Board of Education or any of City's boards, agents, employees or officers by the Contractor or any employee of the Contractor , any subcontractor or consultant, anyone directly or indirectly employed by any of them or anyone for whose acts any of them may be liable, the indemnification obligation under Paragraph 9 above, shall not be limited in any way by any limitation on the amount or type of damages, compensation or benefits payable by or for the Contractor or any subcontractor under Worker's Compensation Acts, disability benefit acts or other employee benefit acts.

9.3. The Contractor understands and agrees that any insurance required by this Contract, or otherwise provided by the Contractor, shall in no way limit the responsibility to indemnify, defend, keep and hold harmless the City, the Board of Education, any of City's boards, agents, employees as provided in this Contract.

9.4. The Contractor expressly understands and agrees that any performance bond or insurance protection required by this Contract, or otherwise provided by the Contractor, shall in no way limit the responsibility to indemnify, keep and save harmless and defend the City and the City's boards, agents, employees or officers as provided herein.

9.5. Royalties and Patents. The Contractor shall, for all time, secure to the City the free and undisputed right to the use of any and all patented articles and methods used in the work and shall defend at Contractor's own expense any and all suits for infringement or alleged infringement of such patents, and in the event of adverse award under patent suits, the Contractor shall pay such awards and hold the City harmless in connection with any patent suits that may arise as a result of installations made by the Contractor and as to any award made thereunder.

9.6. In the event this Contract and/or the Contractor's, or its subcontractor, work and services provisioned hereunder is/are subject to the provisions of any Federal or State statute or regulations, or the City Charter or City Ordinance, the Contractor shall indemnify, defend and hold harmless the City from any fine, penalty or other amounts

imposed on the City under said statutes, regulations, Charter or Ordinances, if caused by Contractor, or its subcontractor, omission or commission.

10. Contract Bonds. The Contractor shall furnish to the City, prior to the execution of this Contract by the City, both a performance bond and a payment bond, each bond written for a penal sum equaling the Section 6 "Total Compensation" amount in a form and with a surety acceptable to the City. The bonds shall continue in effect for the greater of **(i)** the warranty period set forth in Section 7 of this Contract, or **(ii)** three hundred sixty-five (365) calendar days after the City delivers its written notice of its acceptance of the Project.

11. Contractor's Insurance.

11.1. The Contractor shall not commence work under this Contract until all insurance required under this Section 11 has been obtained by the Contractor and such insurance has been approved by the City. The Contractor shall not allow any subcontractor to commence work on any subcontract until all insurance required of any such subcontractor has been so obtained and approved by the City. Insurance shall be provided by insurers, satisfactory to the City and authorized to do business in the State of Connecticut, an "A-" Best's Rating and at least a Class V3 or better financial size category as shown in the most current A.M. Best Company ratings.

11.2. At no additional cost to the City, the Contractor shall purchase and maintain the insurance coverages set forth below which shall protect the City from claims which may arise out of or result from the Contractor's obligation under this Contract, whether such obligations are the Contractor's or subcontractor or person or entity directly or indirectly employed by said Contractor or subcontractor, or by any person or entity for whose acts said Contractor or subcontractor may be liable.

11.3. Each insurance policy shall state that the insurance company shall agree to investigate and defend the insured against all claims for damages, even if groundless. If any insurance required herein is to be issued or renewed on a claims made form as opposed to an occurrence form, the retroactive date for coverage shall be no later than the commencement date of this Contract and shall provide that in the event of cancellation or non-renewal, the discovery period for insurance claims ("Tail Coverage") shall be available for at least 60 months.

11.4. The following policies with stated limits shall be maintained, in full force and effect, at all times during which the services are to be performed by the Contractor:

11.4.1 General Liability Insurance:
$1,000,000.00 each Occurrence
$2,000,000.00 General Aggregate
$2,000,000.00 Products/Completed Operations Aggregate

Providing coverage to protect the City for all damages arising out of bodily injuries, sickness to or death of all persons in any one accident or occurrence and for all damages arising out of destruction of property in any one accident or occurrence.

11.4.2 Automobile Liability Insurance:
$1,000,000.00 Combined Single Limit Each Accident
Any Auto, All Owned and Hired Autos
Providing coverage to protect the City with respect to claims for damage for bodily injury and or property damage arising out of ownership, maintenance, operation, use or loading and unloading of any auto including hired & non-owned autos.

11.4.3 Workers' Compensation: Statutory Limits within the State of Connecticut: Employer Liability (EL):
EL Each Accident **$1,000,000.00**
EL Disease Each Employee **$1,000,000.00**
EL Disease Policy Limit **$1,000,000.00**

Contractor shall comply with all State of Connecticut statutes as it relates to workers' compensation.

11.4.4 Excess/Umbrella Liability Insurance:
$1,000,000.00 each Occurrence
$1,000,000.00 Aggregate
Excess or Umbrella insurance coverage that follows form or sits over General Liability, Automobile Liability and Workers Compensation insurances.

11.4.5 Contractor's Pollution Liability Insurance:
$1,000,000.00 each Occurrence/Claim
$1,000,000.00 Aggregate
There will be no exclusion for Hazardous materials. Including Asbestos and Lead

11.5. Failure to Maintain Insurance: In the event the Contractor fails to maintain the minimum required coverage as set forth herein, the City may at its option purchase same, and offset the Contractor's invoices for the cost of said insurance.

11.6. Cancellation: Should any of the above referenced policies be cancelled, limits reduced, or coverage altered, the City of Waterbury and CH2M HILL ENGINEERS Inc., a subsidiary of Jacobs Engineering Group shall receive written notice of cancellation from the Contractor at least thirty (30) calendar days prior.

11.7. Certificates of Insurance: All Contractor's Insurance except Workers' Compensation shall be endorsed to add the City, the City of Waterbury Water Pollution Control Department, and CH2M HILL ENGINEERS Inc., a subsidiary of Jacobs Engineering Group as additional insured and provide waiver of subrogation on all policies. The insurance afforded the additional insured shall be primary and non-contributory insurance and the coverage and limits provided under the Contractor's policies shall not be reduced or prorated by the existence of any other insurance applicable to any loss the additional insured may have suffered. Prior to the execution of this Contract by the City, the Contractor shall furnish to the City, subject to City approval, certificate(s) of insurance and Additional Insured Endorsement and Waiver of Subrogation Endorsement verifying the above coverages, including the naming of the City of Waterbury, as follows: **"The City of Waterbury, the City of Waterbury Water Pollution Control Department, and CH2M HILL ENGINEERS Inc., a subsidiary of Jacobs Engineering Group are listed as Additional Insured on a primary and non-contributory basis on all policies except Workers' Compensation. All policies shall include a Waiver of Subrogation".** The City's Request for Proposal Number must be shown on the certificate of insurance to assure correct filing. The Contractor must supply replacement/renewal certificates at least thirty (30) days prior to the expiration of the policy(ies). No later than thirty (30) calendar days after Contractor receipt, the Contractor shall deliver to the City a copy of the Contractor's insurance policies and endorsements and riders.

11.8. No later than thirty (30) calendar days after Contractor receipt, the Contractor shall deliver to the City a copy of the Contractor's insurance policies and endorsements and riders.

11.9 If any policy is written on a "Claims Made" basis, the policy must be continually renewed for a minimum of two (2) years from the completion date of this contract. If the policy is replaced and/or the retroactive date is changed, then the expiring policy must be endorsed to extend the reporting period for claims for the policy in effect during the contract for two (2) years from the completion date.

11.10 Original, completed Certificates of Insurance must be presented to the City of Waterbury prior to contract issuance. Contractor agrees to provide replacement/renewal certificates at least thirty (30) calendar days prior to the expiration date of the policies. Should any of the above described policies be cancelled, limits reduced or coverage altered, thirty (30) calendar days written notice must be given to the City of Waterbury.

12. Conformance with Federal, State and Other Jurisdictional Requirements. By executing this Contract, the Contractor represents and warrants that, at all pertinent and relevant times to the Contract, it has been, is and will continue to be in full compliance with all applicable statutes, acts, ordinances, guidelines, resolutions, orders, judgments, decrees, injunctions, rules, and regulations of all government authorities applicable to performance by the Contractor of services hereunder, including those having jurisdiction over its registration

and licensing to perform services hereunder; including, but not limited to, the following: EQUAL EMPLOYMENT OPPORTUNUTY; COPELAND ANTI-KICKBACK ACT, as supplemented in the Department of Labor Regulations (29 CFR, Part 3); DAVIS BACON ACT as supplemented by Department of Labor Regulations (29 CFR Part 5); Section 103 and 107 of the Contract Work Hours and Safety Standards Act, as supplemented by the Department of Labor Regulations (29 CFR Part 5); the HOUSING and COMMUNITY DEVELOPMENT ACT of 1974, as amended; TITLE 31 and Section 12-430(7) of the State of Connecticut General Statutes. All applicable sections of the City Charter and Code of Ordinances are incorporated by reference made a part hereof.

12.1. Taxes-Federal, State and Local. The City is exempt from Federal Excise and Transportation, State and Local Sales and Use Taxes, including without limitation, taxes that would otherwise be imposed upon the Contractor for transactions required or necessitated hereunder between it and its subcontractors, suppliers, etc. The Contractor remains liable, however, for any applicable tax obligations it incurs. Moreover, the Contractor represents that the bid and pricing contained in this Contract do not include the amount payable for said taxes.

12.2. Labor and Wages-Federal and State. The Contractor and its subcontractors shall conform to Federal and State of Connecticut labor laws, and all other laws, ordinances, and legal requirements affecting the work in Connecticut.

12.2.1 The Contractor is aware of, and shall comply with, the provisions of Title 31, §53 of the Connecticut General Statutes, latest revision (the "Act"), concerning the payment of minimum wages for work on public facilities. The provisions of the Act are hereby incorporated by reference and made a part of this Contract. The Act provides that the Connecticut prevailing wage law applies to certain remodeling, refurbishing, alteration, repair and new construction. The wages paid on an hourly basis to any person performing the work of any mechanic, laborer or worker on the work herein contracted to be done and the amount of payment or contribution paid or payable on behalf of each such person to any employee welfare fund, as defined in Conn.Gen.Statute 31-53(i), shall be at a rate equal to the rate customary or prevailing for the same work in the same trade or occupation in the town in which such public works project is being constructed. Any contractor who is not obligated by agreement to make payment or contribution on behalf of such persons to any such employee welfare fund shall pay to each mechanic, laborer or worker as part of such person's wages the amount of payment or contribution for such person's classification on each pay day.

12.2.2 The Contractor is aware of, and shall comply with, the provisions of both the Federal Davis-Bacon Act and the Federal American Recovery and Reinvestment Act of 2009, the provisions of both acts hereby incorporated by reference and made a part of this Contract. The Federal Davis-Bacon Act

provides that Federal wage rate laws apply to certain federally funded contracts. The American Recovery and Reinvestment Act ("ARRA") provides that Federal wage rate laws apply to all ARRA funded contracts regardless of the contract's dollar value.

12.3. Compliance with Chapters 34, 38, and 39 of the Code of Ordinances of the City. By executing this Contract, the Contractor represents and warrants that, at all pertinent and relevant times to the Contract, it has been, is and will continue to be in full compliance with the provisions of Chapters 34, 38, and 39 of the Code of Ordinances of the City and well as any other relevant provisions of the Charter and the Code of Ordinances.

12.4. Compliance with CONN. GEN. STAT. § 4a-60g, as amended by Public Act 25-168, and as may be amended from time to time.

12.4.1 Definitions – For purposes of Section 12.4 and Section 13.3 of this Contract:

i. "Awarding agency" means a state agency or political subdivision of the state, including a municipality or quasi-public agency.

ii. "Minority business enterprise" means any small contractor (A) fifty-one per cent or more of the capital stock, if any, or assets of which are owned by a person or persons who (i) exercise operational authority over the daily affairs of the enterprise, (ii) have the power to direct the management and policies and receive the beneficial interest of the enterprise, (iii) possess managerial and technical competence and experience directly related to the principal business activities of the enterprise, and (iv) are members of a minority, as defined in subsection (a) of section 32-9n, or are individuals with a disability, or (B) which is a nonprofit corporation in which fifty-one per cent or more of the persons who exercise operational authority over the enterprise, (i) possess managerial and technical competence and experience directly related to the principal business activities of the enterprise, (ii) have the power to direct the management and policies of the enterprise, and (iii) are members of a minority, as defined in this subsection, or are individuals with a disability.

iii. "Public works contract" means any agreement (A) for construction, rehabilitation, conversion, extension, demolition or repair of changes or improvements in real property, and (B) that is financed in whole or in part by the state, including, but not limited to, matching expenditures, grants, loans, insurance or guarantees, where such funding equals one hundred fifty thousand dollars or more.

iv. "Small contractor" means (A) any contractor, subcontractor, manufacturer, service company or corporation that (i) maintains its principal place of business in the state, and (ii) is registered as a small business in the federal database maintained by the United States General Services Administration, as required to do business with the federal government, or (B) any nonprofit corporation that (i) maintains its principal place of business in the state, (ii) that had gross revenues not exceeding twenty million dollars in the most recently completed fiscal year prior to such application, and (iii) that is independent.

12.4.2 The Contractor and subcontractor shall comply with the specific requirements of the State of Connecticut Set Aside Program, CONN. GEN. STAT. § 4a-60g, **amended by Public Act 25-168, and as may be amended from time to time,** if the public works contact awarded to the Contactor is funded as provided in 12.4.3 below.

12.4.3 The Contactor shall be subject to the following set-aside requirements if the l public works contact, is funded in whole or in part by the State of Connecticut, and is in excess of ONE HUNDRED FIFTY THOUSAND DOLLARS ($150,000.00).

12.4.4 Set-Aside requirements – Any contractor awarded a public works contract, on the basis of competitive bidding procedures, shall comply with the following Set –Aside requirements: **N/A**

i. This contract is subject to state contract compliance requirements, including nondiscrimination statutes and spending allocation goals. There is anticipated to be $0 in state-funding for this project. State law requires project-specific goals be set for this project based on the project's needs and available Small Business Enterprises ("SBEs") and Minority Business Enterprises ("MBEs"). The SBE goal for this project is N/A%. The MBE goal for this project is N/A%. The selected contractor must demonstrate good faith effort to meet the spending allocation goals.

12.4.5 No Affiliated Subcontracting to Satisfy Goal. The Contractor shall not subcontract with an affiliated person or entity in violation of Conn. Gen. Stat. § 4a-60g. An affiliated contractor or subcontractor shall not be credited toward the City's spending-allocation goals where such credit is prohibited by law.

12.4.5.1 Changes in Subcontractors. The Contractor shall not replace, terminate, materially reduce the work of, or otherwise alter the participation of a small contractor or minority business entity identified for purposes of satisfying a spending allocation goal without providing the City with prior written notice and satisfying all requirements imposed by the Commission on Human Rights and Opportunities and applicable law. The Contractor shall document good-faith efforts to replace any subcontractor with another qualified certified

contractor where required by law or the Commission on Human Rights and Opportunities**.**

12.4.6 Failure of the Contractor or subcontractor to comply with the State of Connecticut Set-Aside program requirements, including, but not limited to, good faith efforts plan and compliance report submissions, shall be a material breach of this Contract. If required by the City, the Contractor shall provide the City with evidence of submission and disposition of all required State of Connecticut Set-Aside programs reports.

13. Discriminatory Practices. In performing this Contract, the Contractor shall not discriminate against any employee or applicant for employment, with respect to his or her hire, tenure, terms, conditions or privileges of employment, or any matter directly or indirectly related to employment, because of race, color, sex, age, religious creed, disability, national origin or ancestry, marital status, family status, prior psychiatric treatment, health care, military status or source of income or because of a handicap that is unrelated to the employee's or the applicant's ability to perform the duties of a particular job or position. Subcontracts with each subcontractor shall contain a provision requiring non-discrimination in employment as herein specified. This covenant is required pursuant to §93.04 of the Code of Ordinances of the City and any breach thereof may be regarded as a material breach of this Contract. Said provisions with subcontractors shall require conformity and compliance with all local, state and federal laws, rules and regulations and Executive orders pertaining to discrimination and equal opportunity requirements.

13.1. Discrimination Because of Certain Labor Matters. No person employed on the work covered by this Contract shall be discharged or in any way discriminated against because such person has filed any complaint or instituted or caused to be instituted any proceeding or has testified or is about to testify in any proceeding under or related to the labor standards applicable hereunder to its employer.

13.2. Equal Opportunity. In its execution of the performance of this Contract, the Contractor shall not discriminate and shall comply with applicable laws prohibiting discrimination on the grounds of race, color, religion, sex, national origin or citizenship status, age or handicap. The Contractor agrees to comply with all local, state and federal laws, rules and regulations and Executive orders pertaining to discrimination and equal opportunity requirements, and will require the same of all subcontractors

13.3. Affirmative Action/Nondiscrimination.

13.3.1. Pursuant to CONN. GEN. STAT. § 4a-60, as amended by Public Act 25-168, and as may be amended from time to time, the following are required for every Public Works Contract:

(b) Except as provided in section 10a-151i, every contract to which an awarding agency is a party shall contain the following provisions:

(1) The contractor agrees and warrants that in the performance of the contract such contractor will not discriminate or permit discrimination against any person or group of persons on the grounds of race, color, religious creed, age, marital status, national origin, ancestry, sex, sexual orientation, gender identity or expression, status as a veteran, status as a victim of domestic violence, intellectual disability, mental disability or physical disability, including, but not limited to, blindness, unless it is shown by such contractor that such disability prevents performance of the work involved, in any manner prohibited by the laws of the United States or of the state of Connecticut; and the contractor further agrees to take affirmative action to ensure that applicants with job-related qualifications are employed and that employees are treated when employed without regard to their race, color, religious creed, age, marital status, national origin, ancestry, sex, gender identity or expression, sexual orientation, status as a veteran, status as a victim of domestic violence, intellectual disability, mental disability or physical disability, including, but not limited to, blindness, unless it is shown by such contractor that such disability prevents performance of the work involved;
(2) The contractor agrees, in all solicitations or advertisements for employees placed by or on behalf of the contractor, to state that it is an "affirmative action-equal opportunity employer" in accordance with regulations adopted by the Commission on Human Rights and Opportunities;
(3) The contractor agrees to provide each labor union or representative of workers with which such contractor has a collective bargaining agreement or other contract or understanding and each vendor with which such contractor has a contract or understanding, a notice to be provided by the Commission on Human Rights and Opportunities advising the labor union or workers' representative of the contractor's commitments under this section, and to post copies of the notice in conspicuous places available to employees and applicants for employment;
(4) The contractor agrees to comply with each provision of this section and sections 46a-68e and 46a-68f and with each regulation or relevant order issued by said commission pursuant to sections 46a-56, 46a-68e, 46a-68f and 46a-86; and
(5) The contractor agrees to provide the Commission on Human Rights and Opportunities with such information requested by the commission, and permit access to pertinent books, records and accounts, concerning the employment practices and procedures of the contractor as relate to the provisions of this section and section 46a-56.

(c) If the contract is a public works contract, the contractor agrees and warrants that he or she will make good faith efforts to employ minority business enterprises as subcontractors and suppliers of materials on such public works project.

(d) Except as provided in section 10a-151i:
(1) Any contractor who has one or more contracts with an awarding agency or who is a party to a public works contract shall include a nondiscrimination affirmation provision certifying that the contractor understands the obligations of this section and will maintain a policy for the duration of the contract to assure that the contract will be performed in compliance with the nondiscrimination requirements of subsection (b) of this section. The authorized signatory of the contract shall demonstrate his or her understanding of this obligation by (A) initialing the nondiscrimination affirmation provision in the body of the contract, (B) providing an

affirmative response in the required online bid or response to a proposal question which asks if the contractor understands its obligations, or (C) signing the contract.

(e) Determination of the contractor's good faith efforts shall include, but shall not be limited to, the following factors: The contractor's employment and subcontracting policies, patterns and practices; the timing and value of bids; affirmative advertising, recruitment and training; technical assistance activities and such other reasonable activities or efforts as the Commission on Human Rights and Opportunities may prescribe that are designed to ensure the participation of minority business enterprises in public works projects.

(f) The contractor shall develop and maintain adequate documentation, in a manner prescribed by the Commission on Human Rights and Opportunities, of its good faith efforts.

(g) The contractor shall include the provisions of subsections (b) and (c) of this section in every subcontract or purchase order entered into in order to fulfill any obligation of a contract with the state, and in every subcontract entered into in order to fulfill any obligation of a public works contract, and such provisions shall be binding on a subcontractor, vendor or manufacturer, unless exempted by regulations or orders of the Commission on Human Rights and Opportunities.

13.3.2. Pursuant to CONN. GEN. STAT. § 4a-60a, as amended by Public Act 23-204, and as may be amended from time to time, the following are required for every Public Works Contract:

(a) Every contract to which an awarding agency is a party, every contract for a quasi-public agency project and every public works contract shall contain the following provisions:

(1) The contractor agrees and warrants that in the performance of the contract such contractor will not discriminate or permit discrimination against any person or group of persons on the grounds of sexual orientation, in any manner prohibited by the laws of the United States or of the state of Connecticut, and that employees are treated when employed without regard to their sexual orientation;

(2) The contractor agrees to provide each labor union or representative of workers with which such contractor has a collective bargaining agreement or other contract or understanding and each vendor with which such contractor has a contract or understanding, a notice to be provided by the Commission on Human Rights and Opportunities advising the labor union or workers' representative of the contractor's commitments under this section, and to post copies of the notice in conspicuous places available to employees and applicants for employment;

(3) The contractor agrees to comply with each provision of this section and with each regulation or relevant order issued by said commission pursuant to section 46a-56;

(4) The contractor agrees to provide the Commission on Human Rights and Opportunities with such information requested by the commission, and permit access to pertinent books, records and accounts, concerning the employment practices and procedures of the contractor which relate to the provisions of this section and section 46a-56; and

(5) Nondiscrimination affirmation provision. The Contractor understands the obligations of this section 13.3 and will maintain a policy for the duration of the Contract to assure that the Contract will be performed in conformance with the nondiscrimination requirements of this section 13.3. The authorized signatory of the Contract shall demonstrate his or her understanding of this obligation by either (A) initialing the nondiscrimination affirmation provision in the body of the Contract, [or] (B) providing an affirmative response in the required online bid or response to a proposal question which asks if the Contractor understands its obligations, or (C) signing the Contract.

14. Good Jobs Ordinance

14.1. Conformance With An Ordinance Concerning The Hiring Of Waterbury Residents On Certain Publicly-Funded Construction Projects.

14.1.1 The Contractors and its Subcontractors shall comply with the specific requirements of "An Ordinance Concerning the Hiring of Waterbury Residents on Certain Publicly-Funded Construction Projects" (the "Good Jobs Ordinance"), as may be amended from time to time and as set forth in Chapter 34 of the Code of Ordinances of the City. While the principal provisions of the ordinance are summarized as set forth in paragraphs C-H below, the Contractor does hereby acknowledge that it has reviewed a copy of the Good Jobs Ordinance and that it has read the Ordinance and that Contractor is familiar with the obligations imposed on the Contractor and each Subcontractor by the Good Jobs Ordinance.

14.1.2 Failure of the Contractor or its Subcontractors to comply with the Good Jobs Ordinance shall be a material breach of this Agreement.

14.1.3 This paragraph shall apply to a Covered Project, as that term is defined in the Good Jobs Ordinance, in the City with a value of $500,000.00 or greater and only to the extent permitted by federal and state law.

14.1.4 Definitions. For purposes of this paragraph:

i. "Administrator" shall be defined as it is in the Good Jobs Ordinance.

ii. "Apprentice" shall be defined as it is in the Good Jobs Ordinance.

iii. "Basic Skilled Worker" shall be defined as it is in the Good Jobs Ordinance.

iv. "Contractor" shall be defined as it is in the Good Jobs Ordinance.

v. "Covered Project" shall be defined as it is in the Good Jobs Ordinance.

vi. "Hiring Goal" shall be defined as it is in the Good Jobs Ordinance.

vii. "Resident" shall be defined as it is in the Good Jobs Ordinance.

viii. "Subcontractor" shall be defined as it is in the Good Jobs Ordinance and shall include the Contractor's direct subcontractor providing construction work and all lower tiered (level) providers of construction work.

14.1.5 Hiring Goals. If this Agreement requires the Contractor to perform work on a Covered Project, the Contractor and each Subcontractor shall have as its hiring goals:

i. at least thirty percent (30%) of its total worker hours performed by City Residents, and

ii. at least twenty-five percent (25%) of construction trade jobs shall go to Apprentices and/or Basic Skilled Workers, and

iii. at least seventy percent (70%) of all "new hires" (as that term is defined in the Good Jobs Ordinance) shall be "economically disadvantaged" individuals (as that term is defined in the Good Jobs Ordinance), and

iv. a minimum of five percent (5%) of the construction workforce labor hours will be local resident, minority artisans, and

v. a minimum of five percent (5%) of the construction workforce labor hours will be women, and

vi. a minimum of ten percent (10%) of the total work hours shall be allocated for minorities, or

vii. as may otherwise be required by any superseding Federal or State employment discrimination prohibition laws.

14.1.6 Good Faith Efforts. The Contractor and each Subcontractor shall engage in Good Faith Efforts to comply with the Hiring Goals. For the purposes of this paragraph, the term "Good Faith Efforts" shall have the same meaning as it does in the Good Jobs Ordinance.

The Contractor and each Subcontractor shall individually implement Good Faith efforts to satisfy the Hiring Goals.

14.1.7 Action Plan and Pre-Construction Meeting. Not later than fourteen (14) business days prior to the scheduled commencement date for construction, the Contractor shall submit a written plan-of-action to the City and to the Administrator of the Good Jobs Ordinance defining how the Contractor, and each Subcontractor, shall implement Good Faith Efforts to fulfill the Hiring Goals. Each plan-of-action shall include the anticipated number of job positions required for the Work. Not later than five (5) business day prior to the commencement date of construction, the Contractor must attend a mandatory "pre-construction" meeting with the City to review all plans-of-action and other relevant materials. No construction work shall proceed absent this pre-construction meeting.

14.1.8 Other Contractor Obligations. In addition to the foregoing, the Contractor shall ensure that all Subcontractor contracts and agreements expressly set forth and state as binding obligations therein, subject to appropriate party name change, the above Hiring Goals and Good Faith Efforts. The Contractor shall be accountable for, and liable to the City for, Contractor and each Subcontractor compliance with Hiring Goals and Good Faith efforts.

i. The Contractor shall meet with the Administrator no less than four (4) weeks prior to the commencement of construction on a Covered Project and provide the Administrator with the number of job positions to be created by the project by trade and the qualifications by job tile.

ii. The Contractor shall be required to produce Contractor and Subcontractor documentation that may be required under the provisions of the Good Jobs Ordinance or that the City or the Administrator

reasonably believes will assist the City or the Administrator with their evaluation of Hiring Goals and Good Faith Efforts.

iii. The Contractor shall deliver weekly certified payroll records to the City within five (5) working days of the end of each payroll period. Moreover, the Contractor shall require each Subcontractor to create weekly certified payroll records.

iv. The Contractor's and each Subcontractor's payroll records shall include the person-hours, the residential address, race, gender, hiring date, and apprentice (job) classification of all personnel employed under this Agreement and all Contracts and Sub-Contracts thereunder. The Contractor and each Subcontractor shall mark their respective final payroll period records as being final and be signed by an authorized officer or employee.

14.2 Liquidated Damages Applicable To Section 14.1

14.2.1 If the City finds that the Contractor, or a Subcontractor, has failed to achieve Hiring Goals during any five (5) day work period (Monday through Friday), the City shall:

i. issue a written notice to the Contractor specifying the matters constituting such failure and the time period within which Good Faith Efforts documentation must be delivered to the City for its evaluation.

ii. if the Good Faith documentation is not provided or, if provided, it fails to demonstrate compliance with Good Faith Efforts, the Contractor shall, for each failure by the Contractor or a Subcontractor to achieve the Hiring Goals during a full five day work period, pay to the City one thousand dollars ($1,000.00) as liquidated damages.

14.2.2 If the City finds that the Contractor, or a Subcontractor, has failed to deliver weekly certified payroll records to the City within five (5) working days of the end of each payroll period the Contractor shall, as liquidated damages pay one thousand dollars ($1,000.00) to the City for each week of ongoing violation.

14.2.3 The City shall provide the Contractor with an invoice identifying all sums due the City, as liquidated damages, as a result of the Contractor or a Subcontractor's failure to comply with the Good Jobs Ordinance as set forth above.

14.2.4 No portion of any invoice submitted by a Contractor that is subject to

liquidated damages shall be paid by the City until such time as all liquidated damages relating to that invoice have been paid to the City.

14.2.5 The foregoing liquidated damages provisions shall be expressly set forth, subject to appropriate party name adjustments, as material provisions in all Contracts that the Contractor has with Subcontractors and the Contractor is obligated hereunder to enforce compliance in such Contracts with Subcontractors.

14.2.6 Any payment of liquidated damages hereunder shall not preclude a later claim, nor any later finding of a breach, or any payment of additional damages related to such later claim.

15. Housing and Urban Development Section 3 Clause. In the event this Contract is funded, in whole or in part, through Housing and Urban Development assistance, 24 C.F.R. §135.38 may apply and the Contractor shall then be required to comply with the following (referred to as the "Section 3 clause"):

15.1. The work to be performed under this Contract is subject to the requirements of Section 3 of the Housing and Urban Development Act of 1968, as amended, 12 U.S.C. § 1701u (Section 3). The purpose of Section 3 is to ensure that employment and other economic opportunities generated by HUD assistance or HUD-assisted Projects covered by Section 3, shall, to the greatest extent feasible, be directed to low and very low-income persons, particularly persons who are recipients of HUD assistance for housing.

15.2. The parties to this Contract agree to comply with HUD's regulations in 24 C.F.R. part 135, which implement Section 3. As evidenced by their execution of this Contract, the parties to this Contract certify that they are under no contractual or other impediment that would prevent them from complying with the part 135 regulations.

15.3. The Contractor agrees to send to each labor organization or representative of workers with which the Contractor has a collective bargaining agreement or other understanding, if any, a notice advising the labor organization or workers' representative of the Contractor's commitments under this Section 3 clause, and will post copies of the notice in conspicuous places at the work site where both employees and applicants for training and employment positions can see the notice. The notice shall describe the Section 3 preference, shall set forth minimum number and job titles subject to hire, availability of apprenticeship and training positions, the qualifications for each; and the name and location of the person(s) taking applications for each of the positions; and the anticipated date the work shall begin.

15.4. The Contractor agrees to include this Section 3 clause in every subcontract subject to compliance with regulations in 24 C.F.R. part 135, and agrees to take

appropriate action, as provided in an applicable provision of the subcontract or in this Section 3 clause, upon a finding that the subcontractor is in violation of the regulations in 24 C.F.R. part 135. The Contractor will not subcontract with any subcontractor where the contractor has notice or knowledge that the subcontractor has been found in violation of the regulations in 24 C.F.R. part 135.

15.5. The Contractor will certify that any vacant employment positions, including training positions, that are filled **(i)** after the Contractor is selected but before the Contract is executed, and **(ii)** with persons other than those to whom the regulations of 24 C.F.R. part 135 require employment opportunities to be directed, were not filled to circumvent the Contractor's obligations under 24 C.F.R. part 135.

15.6. Noncompliance with HUD's regulations in 24 C.F.R. part 135 may result in sanctions, termination of this contract for default, and debarment or suspension from future HUD assisted contracts.

15.7. With respect to work performed in connection with Section 3 covered Indian housing assistance, section 7(b) of the Indian Self-Determination and Education Assistance Act (25 U.S.C. § 450e) also applies to the work to be performed under this Contract. Section 7(b) requires that to the greatest extent feasible **(i)** preference and opportunities for training and employment shall be given to Indians, and **(ii)** preference in the award of contracts and subcontracts shall be given to Indian organizations and Indian-owned Economic Enterprises. Parties to this Contract that are subject to the provisions of Section 3 and section 7(b) agree to comply with Section 3 to the maximum extent feasible, but not in derogation of compliance with section 7(b).

16. Termination.

16.1. Termination of Contract for Cause. If, through any cause, the Contractor shall fail to fulfill in a timely and proper manner its obligations under this Contract, or if the Contractor shall violate any of the covenants, agreements, or stipulations of this Contract, the City shall thereupon have the right to terminate this Contract by either **(i)** giving written notice to the Contractor of a date certain by which Contractor shall, to the written satisfaction of the City, cure after which and without further action by any party, such termination shall automatically become effective and binding, or **(ii)** giving written notice to the Contractor specifying the effective date of such termination at least five (5) business days before the effective date of such termination. Notwithstanding the above, upon determination by a court of competent jurisdiction that the termination of the agreement pursuant to this **Section 16.1** was wrongful, such termination will be deemed converted to a termination for convenience pursuant to **Section 16.2** and the Contractor's remedy for wrongful termination shall be limited to the recovery of the payments permitted for termination for convenience pursuant to **Article 16.2**.

16.1.1 In the event of a termination, all finished or unfinished documents, data, studies, reports, plans, specifications, drawings, supplies, services, etc. prepared by the Contractor under this Contract shall, at the option of the City, become the City's property, and the Contractor shall be entitled to receive just and equitable compensation for any satisfactory work completed for such.

16.1.2 Notwithstanding the above, the Contractor shall not be relieved of liability to the City for damages sustained by the City by virtue of any breach of this Contract by the Contractor, and the City may withhold any payments to the Contractor for the purpose of setoff until such time as the exact amount of damages due the City from the Contractor is determined.

16.2. Termination for Convenience of the City. The City may terminate this Contract at any time for the convenience of the City, by a notice in writing from the City to the Contractor. If this Contract is terminated by the City as provided herein, the Contractor will be paid an amount which bears the same ratio to the total compensation as the services actually performed bear to the total services of the Contractor covered by this Contract, less payments of compensation previously made.

16.3. Termination for Non-Appropriation or Lack of Funding. The Contractor acknowledges that the City is a municipal corporation and that this Contract is subject to the appropriation and disbursement of funds by the City sufficient for this Contract for each budget year in which this Contract is in effect. The Contractor therefore agrees that the City shall have the right to terminate this Contract in whole or in part without penalty to the City in the event that sufficient funds to provide for City payment(s) under this Contract is not appropriated, not authorized, or not made available, or such funding has been reduced. In the event this Contract is subject, in whole or in part, to the appropriation and disbursement of Federal and/or State funds and those Federal and/or State funds are not appropriated or are not disbursed to the City, the Contractor hereby agrees that the City shall have the right to terminate this Contract in whole or in part without penalty to the City.

16.3.1 Effects of Non-Appropriation. If funds to enable the City to effect continued payment under this Contract are not appropriated, authorized or otherwise made available by law, the City shall have the right to terminate this Contract without penalty at the end of the last period for which funds have been appropriated, authorized or otherwise made available by law by giving written notice of termination to the Contractor.

16.3.2 Effects of Reduced Levels of Funding. If funding is reduced by law, or funds to pay the Contractor for the agreed to level of the products, services and functions to be provided by the Contractor under this Contract are not appropriated, authorized or otherwise made available by law, the City may, upon seven (7) business days written notice to the Contractor, reduce the level

of the products, services or functions in such manner and for such periods of time as the City may elect. The charges payable under this Contract shall be equitably adjusted to reflect such reduced level of products, services or functions and the parties shall be afforded the rights set forth in this Contract.

16.3.3 No Payment for Lost Profits. In no event shall the City be obligated to pay or otherwise compensate the Contractor for any lost or expected future profits.

16.4. Rights Upon Termination.

16.4.1 Termination for Cause. In the event the City terminates this Contract for cause, the Contractor shall relinquish to the City any applicable interest, title and ownership including, but not limited to, perpetual use of any proprietary rights in and to the products and deliverables delivered to, in possession of and properly invoiced and paid for by (except to the extent such invoiced amount is disputed) the City. With regard to third party products, the Contractor shall transfer all licenses which it is permitted to transfer in accordance with the applicable third party license. The City shall have no financial obligation to compensate the Contractor for such terminated products unless payment is otherwise approved by the City prior to such termination. The Contractor shall be liable for costs incurred by the City, including but not limited to reasonable attorney fees and all court awarded fees and costs incurred in terminating this Contract in whole or in part.

16.4.2 Termination for Lack of Funding or Convenience. In the event of termination by the City for lack of funding or convenience, the City shall pay the Contractor for all labor, services, equipment, materials, reports, plans, specifications, drawings, deliverables, incidentals, etc.(including any holdbacks) installed and delivered to the City as of the Termination Date and the Contractor shall relinquish to the City any applicable interest, title and ownership including, but not limited to perpetual use of any proprietary rights in and to said labor, services, equipment, materials, reports, plans, specifications, drawings, deliverables, incidentals, etc. delivered to, in possession of and paid for by the City (except to the extent any invoiced amount is disputed). The Contractor shall be required to exercise commercially reasonable efforts to mitigate damages.

16.4.3 Assumption of Subcontracts. In the event of termination, the City shall have the right to assume, at its option, any and all subcontracts for products, services and functions provided exclusively under this Contract.

16.4.4 Delivery of Documents. In the event of termination, **(i)** the Contractor shall promptly deliver to the City, in a manner reasonably specified by the City,

all documents and other tangible items furnished by, or owned, leased, or licensed by, the City, and **(ii)** the City shall pay the Contractor for all services performed and deliverables completed and accepted (pro-rated for deliverables partially completed) prior to the effective date of the termination (except to the extent any invoice amount is disputed).

17. Force Majeure. Contractor shall not be held responsible for delays nor be subject to liquidated damages when such delays are caused by conditions beyond its control, including without limitation:

17.1. Acts of God, fire, explosion, epidemic, cyclone, flood, war, strikes, revolution, civil commotion, or acts of public enemies; and

17.2. Change of law, order, proclamation, regulation, ordinance, or governmental requirement.

Upon cessation of work for reason of force majeure delays, Contractor shall use its best efforts to meet the schedule set forth in Section 5 of this Contract.

18. Subcontracting. The Contractor shall not, without the prior written approval of the City's Using Agency, subcontract, in whole or in part, any of the Contractor's services. Any subcontractor so approved shall be required to secure and maintain insurance coverage equal to or better than that required of the Contractor and shall name the City as an additional insured party and said subcontractors shall deliver to the City a certificate of insurance evidencing such coverages. All subcontractors shall comply with all federal, state and local, laws, regulations and ordinances but such requirement shall not relieve the Contractor from its requirement that all services provided hereunder shall comply with all Federal, State and local, laws, regulations and ordinances.

18.1. The Contractor shall be as fully responsible to the City for the acts and omissions of its subcontractors, and of persons either directly or indirectly employed by them, as it is for the acts and omissions of persons directly employed by the Contractor.

18.2. The Contractor is responsible for and shall control activities of its subcontractors, and the subcontractors shall consult and cooperate with one another and other contractors working on the Project site. Each subcontractor shall furnish all necessary information to other subcontractors and shall lay out and install its own work so as to avoid any delays or interferences with the work of another. Any cost for changes, cutting and/or repairing, made necessary by failure to observe the above requirements shall be borne by the Contractor or subcontractor responsible for such failure or neglect.

18.3. The Contractor shall not, without the prior written approval of the City's Using Agency, substitute, terminate, replace or otherwise remove a subcontractor.

19. Assignability. The Contractor shall not assign any interest in this Contract, and shall not transfer any interest in the same (whether by assignment or novation) without the prior written approval of the City; provided, however, that claims for money due or to become due the Contractor from the City under this Contract may be assigned to a bank, trust, company, or other financial institution, or to a Trustee in Bankruptcy, without such approval. Notice of any such assignment or transfer shall be furnished promptly to the City.

20. Audit. The City reserves the right to audit the Contractor's books of account in relation to this Contract any time during the period of this Contract or at any time during the twelve month period immediately following the closing or termination of this Contract. In the event the City elects to make such an audit, the Contractor shall immediately make available to the City all records pertaining to this Contract, including, but not limited to, payroll records, bank statements and canceled checks.

21. Interest of City Officials. No member of the governing bodies of the City, and no other officer, employee, or agent of the City who exercises any functions or responsibilities in connection with the carrying out of the Project to which this Contract pertains, shall have any personal interest, direct or indirect, in this Contract.

22. Interest of Contractor. The Contractor covenants that it presently has no interest and shall not acquire any interest, direct or indirect, in the Project or any parcel of land therein or any other interest which would conflict in any manner or degree with the performance of its services hereunder. The Contractor further covenants that in the performance of this Contract no person having any such interest shall be employed.

23. Entire Contract. This Contract shall constitute the complete and exclusive statement of the contract between the parties as it relates to this transaction and supersedes all previous agreements and understandings, whether written or oral, relating to such subject matter. Any amendment to this Contract must be in writing and agreed to and executed by the City and the Contractor, and must comply with the City's Charter and Code of Ordinances.

24. Independent Contractor Relationship. The relationship between the City and the Contractor is that of client and independent contractor. No agent, employee, or servant of the Contractor shall be deemed to be an employee, agent or servant of the City. The Contractor shall be solely and entirely responsible for its acts and the acts of its agents, employees, servants and subcontractors during the performance of this Contract.

25. Severability. Whenever possible, each provision of this Contract shall be interpreted in such a manner as to be effective and valid under applicable law. If any provision of this Contract, however, is held to be prohibited or invalid under applicable law, such provision shall be deemed restated to reflect the original intentions of the parties, as nearly as possible in accordance with applicable law, and if capable of substantial performance, the remaining provisions of this Contract shall be enforced as if this Contract was entered into without an

invalid provision. If the ruling and/or controlling principle of law or equity leading to the ruling is subsequently overruled, modified or amended by legislation, judicial or administrative action, then the provision(s) in question as originally set forth in this Contract shall be deemed valid and enforceable to the maximum extent permitted by the new controlling principal of law or equity.

26. Survival. Any provisions of this Contract that impose continuing obligations on the parties shall survive the expiration or termination of this Contract for any reason.

27. Changes in the Project: Change Orders.

27.1. Requests for Change Orders. The City reserves the right on its own volition, or based upon a proposal for a Change Order submitted in written form with a thorough explanation by the Contractor, to request from time to time any changes to the requirements and specifications of this Contract and the products to be provided and the functions and services to be performed by the Contractor under this Contract. Such changes must be authorized by the City. The City will not approve of any change orders, deletions, additions, or additional work items to the Scope of Services or any change in the terms and conditions of this Contract except by means of a City authorized amended Scope of Services, applicable and restricted to those items set forth in §1, above, or Change Order issued as set forth in this section, except in the event of an emergency endangering life or property.

27.2. Procedures.

27.2.1 The Contractor's Response to a Change Request.

i. Within thirty (30) calendar days after receipt of a request by the City for any such change or such other period of time as the Parties may mutually agree to in writing, the Contractor shall submit to the City a proposal describing any changes in Contract Milestones or Contract completion dates, products, functions, timing of delivery, assignment of personnel, and the like, and any associated price adjustment. The Contractor's proposal shall describe, in detail, the basis for the proposed price adjustment, including the charges for any products required to implement the change request.

ii. To the extent that additional cost or cost savings result from a change in required products, the Contractor shall obtain any additional products and provide them to the City at a negotiated price acceptable to the City and the Contractor. Similarly, if the change request is expected to result in a reduction in products required to perform the services, the Contractor's charges shall be reduced by the cost savings resulting from the products eliminated by the change request**.**

27.2.2 City's Acceptance of Change Request. If the City accepts the Contractor's proposal, the City shall issue a change order referencing the Contractor's proposal and both parties shall sign the change order. The Contractor shall not implement any change request until the City has issued a valid, properly executed, change order.

27.2.3 City's Rejection of Change Request. If the City does not accept the Contractor's proposal, the City may within two weeks of such non-acceptance: **(i)** withdraw its change request; or, **(ii)** modify its change request, in which case the procedures set forth above shall apply to the Contractor's response to the modified change request.

27.3. City Discretion. The City may, in its sole discretion, approve the proposed Change Order and shall forward same for additional signatures under the following conditions: **(i)** If it conforms to provisions of applicable laws, and **(ii)** if it is consistent with this Contract, and **(iii)** if the time of performance of this Contract will not be unreasonably delayed, **(iv)** the Final Completion date is not changed, **(v)** if the Change Order requires a change to the Final Completion date, such change has been authorized by an approved, executed, written Amendment to this Contract, and **(vii)** if the Change Order requires an increase in the price of the Contract, the City **(1)** has sufficient funds, and **(2)** if a budget transfer is required to cover the cost of the proposed Change Order, such transfer has secured the written approval of the Board of Aldermen and other required regulatory agencies.

27.4. Change Orders Governed by the Provisions of this Contract. All work performed under a Change Order is governed by the provisions of this Contract.

28. Conflicts or Disputes. This Contract represents the concurrence between the City and the Contractor and governs all disputes between them. In the instance of a conflict or dispute over issues not specifically referenced within the Contract, the following documents shall be used as historical documents, without regard to the order of precedence, to resolve such conflicts or disputes, as follows: **(i)** the City's **RFP Number 8665**, and **(ii)** the Contractor's response to **RFP Number 8665**. Said historical documents are attached hereto as part of **Attachment A.**

28.1. Procedure. This procedure supersedes all statements to the contrary occurring either in proposals or other prior agreements, oral or written, and all other communications between the parties relating to this subject.

28.2. Presumption. This Contract or any section thereof shall not be construed against any party due to the fact that the Contract or any section thereof was drafted by such party.

29. Disputes; Legal Proceedings; Waiver of Trial by Jury and Continued Performance. The Contractor agrees that its waives a trial by jury as to any and all claims, causes of action or disputes arising out of this Contract or services to be provided pursuant to this Contract. Notwithstanding any such claim, dispute or legal action, the Contractor shall continue to perform services under this Contract in a timely manner, unless otherwise directed by the City.

30. Binding Contract. The City and the Contractor each bind themselves, and their successors, assigns and legal representatives to the other party to this Contract and to the successors, assigns and legal representatives of such other party with respect to all covenants of this Contract.

31. Waiver. Any waiver of the terms and conditions of this Contract by either of the parties hereto shall not be construed to be a waiver of any other term or condition of this Contract.

32. Governing Laws. This Contract, its terms and conditions and any claims arising there from shall be governed by the laws of the State of Connecticut.

33. Notice. Except as otherwise specifically prohibited in this Contract, whenever under this Contract approvals, authorizations, determinations, notices, satisfactions or waivers are required or permitted, such items shall be effective and valid only when given in writing signed by a duly authorized officer of the City or the Contractor, and delivered in hand or sent by mail, postage prepaid, to the party to whom it is directed, which until changed by written notice, are as follows:

Contractor: COASTLINE CONSTRUCTION CORP.
24 LONG HILL RD.
CLINTON, CT 06413

City: City of Waterbury
Water Pollution Control Department
210 Municipal Road
Waterbury, CT 06708

With copy to: Jacobs Engineering Group, Inc.
210 Municipal Road
Waterbury, CT 06708

And:

City of Waterbury

Office of the Corporation Counsel
City Hall Municipal Building - 3rd Floor
235 Grand Street
Waterbury, CT 06702

34. City Code of Ordinances, Ethics and Conflict of Interest Code, Provisions.
The Person (the term "Person" shall herein be as defined in Section 38 of the City's Code of Ordinances) supplying the labor, services, equipment, materials, reports, plans, specifications, drawings, deliverables, incidentals, etc. under this Contract shall comply with all applicable Federal, State and Municipal statutes, regulations, charters, ordinances, rules, etc, whether or not they are expressly stated in this Contract, including but not limited to the following:

34.1. It shall be a material breach of this Contract, and, except as may be permitted by regulations or rulings of the City of Waterbury Board of Ethics it shall be a violation of the City's Code of Ordinances, for any Public Official, City Employee or Member of a Board or Commission who is participating directly or indirectly in the procurement process as set forth in the City's Code of Ordinances, including those participating in exempt transactions, to become or be the employee of any person contracting with the governmental body by whom the Official, Employee, or Board or Commission member is employed or is a member.

34.2. It shall be a material breach of this Contract, and it shall be a violation of the City's Code of Ordinances for any Person to offer, give, or agree to give any current or former Public Official, Employee or Member of a Board or Commission, or for such current or former Public Official, Employee or Member of a Board or Commission to solicit, demand, accept or agree to accept from another Person, a gratuity or an offer of employment in connection with any: decision; approval; disapproval; recommendation; preparation of any part of a program requirement or a requisition; influencing the content of any specification or procurement standard; or rendering of advice, investigation, auditing, or in any other advisory capacity in any proceeding or application, request for ruling, determination, claim or controversy, or other particular matter, pertaining to any program requirement or a Contract or Purchase Order, or to any solicitation or proposal therefore.

34.3. It shall be a material breach of this Contract and it shall be a violation of the City's Code of Ordinances for any payment, Gratuity, or offer of employment to be made as an inducement for the award of a subcontract or order, by or on behalf of a subcontractor, the prime Contractor or higher tier subcontractor or any Person associated therewith, under a Contract or Purchase Order to the City.

34.4. The value of anything transferred or received in violation of the City's Charter, Code of Ordinances, and/or regulations promulgated there under, by any Person subject to said Charter and/or Ordinances may be recovered by the City.

34.5. Upon a showing that a subcontractor made a kickback to the City, a prime Contractor or a higher tier subcontractor in connection with the award of a subcontract or order there under, it shall be conclusively presumed that the amount thereof was included in the price of the subcontract or order and ultimately borne by the City and will be recoverable hereunder from the recipient. In addition, said value may also be recovered from the subcontractor making such kickbacks. Recovery from one offending party shall not preclude recovery from other offending parties.

34.6. It shall be a material breach of this Contract and it shall be a violation of the City's Code of Ordinances for a Person to be retained, or to retain a Person, to solicit or secure a contract with the City upon an agreement or understanding for a commission, percentage, brokerage, or contingent fee; and every Person, before being awarded a City Contract, shall deliver to the City, on a City authored form, a representation that such Person has not retained anyone in violation of this subsection 34.6, the failure to deliver said form being a material breach of this Contract and a violation of the City's Code of Ordinances. Note, however, this subsection 34.6 shall not apply to full-time Employees who, as a condition of their employment, may be entitled to bonuses or other fees in accordance with their employment relationship.

34.7. The Person hereby expressly represents that he/she/it has complied with those sections of the City's Code of Ordinances requiring that said Person has **(i)** delivered to the City an affidavit, on a City authored form, stating that the Person and its affiliates have no delinquent taxes or other financial obligations owned to the City; **(ii)** filed the City authored financial disclosure statement form as set forth in the City's Code of Ordinances regarding disclosure of financial interests; **(iii)** delivered to the City a written acknowledgement, on a City authored form, evidencing receipt of a copy of the "Ethics and Conflict of Interest" ordinance for the City of Waterbury and hereby expressly represents that said Person is in full compliance with the entirety of said Code of Ordinances; and **(iv)** filed a current list of all taxable personal and real property as required by the State of Connecticut General Statutes. Any violation of this subsection 34.7 shall be deemed a material breach of this Contract and shall be a violation of the City's Code of Ordinances.

34.8. The definitions set forth in the City's Code of Ordinances shall be the primary source for interpretation of the forgoing subsections 34.1-34.7.

34.9. The Contractor is hereby charged with the requirement that it shall have knowledge of, and shall fully comply with, all relevant provisions of the City's Charter and all relevant provisions of the City's Code of Ordinances, including without limitation Chapters 93, titled "Discriminatory Practices", Chapter 38 titled "Centralized Procurement System", and Chapter 39 titled "Ethics and Conflict of Interest", of said Code as may be amended from time to time.

34.10 The Contractor hereby acknowledges receipt of a copy of the Chapters 38 and 39 of City's Ordinance regarding Procurement, Ethics, and Conflicts of Interest and has familiarized itself with said Code and hereby agrees to adhere to said Code. The text of Chapters 38 and 39 of said Code may be obtained from the Office of the City Clerk of the City and on the internet at the City Clerk's web site: *http://www.waterburyct.org/content/458/539/default.aspx* [click link titled "The City of Waterbury Code of Ordinances *Passed 8/24/2009*". For Chapter 38, click on "TITLE III: ADMINISTRATION", then click on "CHAPTER 38: CENTRALIZED PROCUREMENT SYSTEM". For Chapter 39, click on "TITLE III: ADMINISTRATION", then click on "CHAPTER 39: ETHICS AND CONFLICTS OF INTEREST"].

34.11. The Contractor is hereby charged with the requirement that it shall have knowledge of, and shall fully comply with, the City's Ordinance Sections 34.15 through 34.99 entitled, "Ordinance Concerning the Hiring of Waterbury Residents on Certain Publicly-Funded Construction Projects," and the State of Connecticut Legislature's Special Act No. 01-1.

34.12. Every Person who conducts business with, contracts, with or provides commodities or services to the City, is charged with notice of the extent of the powers and authority, and the limitations thereon, of the Public Officials and Employees of the City, as set forth in the charter of the City, the Code of Ordinances and any Regulations or Policies pertaining thereto. In particular, and without implying any limitation as to its applicability, it applies to all Persons who participate in the procedures pertaining to the Centralized Procurement System as set forth in Chapter 38, and the Ethics and Conflict of Interest provisions set forth in Chapter 39 of the Code of Ordinances.

34.13. INTEREST OF CITY OFFICIALS. No member of the governing body of the City, and no other officer, employee, or agent of the City who exercises any functions or responsibilities in connection with the carrying out of the project, to which this agreement pertains, shall have any personal interest, direct or indirect, in this agreement.

34.14. PROHIBITION AGAINST CONTINGENCY FEES. The Contractor hereby represents that it has not retained anyone to solicit or secure a contract with the City upon an agreement or understanding for a commission, percentage, brokerage or contingency fee.

34.15. FREEDOM OF INFORMATION ACT NOTICE. Pursuant to State statute, in the event the total compensation payable to the Contractor set forth in Section 6 of this Contract is greater than $2,500,000.00, the City is entitled to receive a copy of any and all Contractor records and files related to the performance of this Contract and those records and files are subject to the Freedom of Information Act ("the Act") and may be disclosed by the City pursuant to the Act.

35. Definitions. Whenever the following, words, terms, etc. appear in this Contract, the intent and meaning shall be as follows:

35.1 Additional Work: Work required by the City that involves a substantial addition to, deduction from or modification of the Contract Documents.

35.2 Bid or Proposal: The form on which the bidder is to submit a bid for the Work contemplated.

35.3 Bidder or Proposer: A person, partnership, corporation or other business organization submitting a bid or proposal on the form for the Work contemplated.

35.4 City: The City of Waterbury, acting directly or through specifically authorized personnel.

35.5 Construction Supervisor: An employee of the City of Waterbury, or other City duly authorized person.

35.6 Contract Time: The number of days as stated in the Contract to: (i) achieve Substantial Completion (ii) Final Completion and any other identified Project Milestone.

35.7 Equal: The recognized equivalent in substance and function; considering quality, workmanship, economy of operation, durability and suitability for purposes intended, and not constituting a change in the Work specified. Whenever the words "equal" or "equals" or words of like import are used, it shall be understood they mean "equal" in the opinion of the City.

35.8 Final Completion: The time at which the Project has progressed to the point where, in the opinion of the City, the Project is complete such that it is ready for final payment as evidenced by the City's, or its duly authorized City representative's, written recommendation of final payment. The terms "finally complete" and "finally completed" as applied to the Project refer to Final Completion and includes, but it not limited to, documentation being provided by the Contractor as provided in General Conditions Article 109.

35.9 Notice to Proceed: A letter from the City which shall state the date of execution of the Contract and specifically advise the Contractor to begin work on the Contract.

35.10 General Conditions and/or Special Conditions: An extension to the terms, conditions, and provisions set forth in this document as additional, material, provisions of this Contract.

35.11 Plans: All drawings or reproductions of drawings pertaining to the construction of the work contemplated and its appurtenances.

35.12 Project Engineer or Manager: **CH2M HILL ENGINEERS Inc., a subsidiary of Jacobs Engineering Group (hereinafter "Jacobs Engineering Group")**

35.13 Shop Drawings: Drawings, diagrams, schedules, performance charts, brochures and other materials prepared by the Contractor or subcontractors, manufacturers or distributors which illustrate some portion of the work.

35.14 Specifications or Technical Specifications: The description, provisions and other requirements pertaining to the materials, methods and manner of performing the Project.

35.15 Subcontractor: A person, partnership, corporation or other business organization supplying labor and/or materials for work at the site of the Project to and under agreement with the Contractor.

35.16 Substantial Completion: The time at which, in the opinion of the Project Engineer, the Work (or a specified part thereof) is sufficiently complete, in accordance with the Contract Documents, so that the Work (or a specified part thereof) can be utilized for the purposes for which it is intended. The terms "substantially complete" and "substantially completed" as applied to all or part of the Work mean Substantial Completion thereof.

35.17 Substitution: A replacement of specified material, device or equipment which is sufficiently different in substance, function, quality or workmanship to become the subject of a Change Order.

35.18 Work: All plant, labor, materials, services, supplies, equipment and other facilities and items necessary for, or incidental to, the completion of the terms of the Contract.

35.19 Using Agency: **Water Pollution Control Department.**

[Signature page follows]

IN WITNESS WHEREOF, the parties hereto execute this Contract on the dates signed below.

WITNESSES:

Sign:_____
Print name:

Sign:_____
Print name:

CITY OF WATERBURY

By:_____
Paul K. Pernerewski, Jr.
Mayor

Date: _____

WITNESSES:

Sign:_____
Print name:

Sign:_____
Print name:

COASTLINE CONSTRUCTION CORP.

By:_____
Print name:
Its _____

Date: _____

ATTACHMENT A

Attachment A shall consist of the following, which are attached hereto, are acknowledged by the Contractor as having been received, or otherwise hereby incorporated by reference as noted below, and all are made a part hereof:

1.1.1 **RFP Number 8665** (acknowledged by the Contractor as having been received and incorporated by reference);

1.1.2 **RFP Number 8665** Addendum #1, dated July 30, 2026 and consisting of 12 pages (acknowledged by the Contractor as having been received and incorporated by reference);

1.1.3 Contractor's Proposal consisting of 31 pages, including Contractor's Price Proposal, dated August 6, 2026 and consisting of 3 pages submitted in response to **RFP Number 8665** (attached hereto);

1.1.4 Annual Statement of Financial Interests; Disclosure and Affidavit Re: Outstanding Obligations to the City; Debarment Certification; Corporate Resolution, Non-Collusive Affidavit (incorporated by reference);

1.1.5 Certificates of Insurance (attached hereto);

1.1.6 Performance Bond and Payment Bond (attached hereto);

1.1.7 Technical Specifications consisting of 210 pages (attached hereto);

1.1.8 Drawings prepared by Jacobs entitled "Trumpet Brook Sanitary Sewer Relocation," consisting of 18 sheets and dated May 2026 (attached hereto);

1.1.9 Special Conditions (Article 1 – Article 32) consisting of 20 pages (attached hereto);

1.1.10 General Conditions (Article 1 – Article 113) consisting of 36 pages (attached hereto);

1.1.11 State Wage Rate Documentation (attached hereto);

1.1.12 City of Waterbury Good Jobs Ordinance (attached hereto);

1.1.13 Any and all amendment(s) and Change Orders issued by the City after execution of Contract (incorporated by reference);

1.1.14 All applicable Federal, State and local statutes, regulations, charter and ordinances (incorporated by reference), and

1.1.15 All permits (including, but not limited to, City of Waterbury Building permit(s)) and licenses (incorporated by reference).

THE CITY OF WATERBURY
CONNECTICUT

MEMORANDUM

Date: 09/29/2026

From: **Delinquent Tax Office**

To: **Denis Cuevas**
Water Department

Subject: **Tax Clearance Verification**

As of the date of this letter, the records of the Tax Collector's Office indicate that the following ***is not*** delinquent in the payment of property taxes, water charges, or parking tickets.

Coastline Construction Corp
Louis Sr. & Jr and Robert Campanaro
PO Box 910
Clinton, CT 06413

If you have any questions or require additional information regarding this matter, please do not hesitate to call our office at (203) 574-6810.

Respectfully,

Heidi Barbieri. CCMC
Deputy Tax Collector
City of Waterbury

HB/wf

ATTACHMENT A

MAUREEN McCAULEY
ASSISTANT DIRECTOR OF PURCHASING



OFFICE OF THE DIRECTOR OF PURCHASING
THE CITY OF WATERBURY
CONNECTICUT

ADDENDUM #1

July 30, 2026

RFP 8665 Trumpet Brook Sewer Relocation

Please Be Advised:
1. All Proposers are hereby notified that this Addendum No. 1 shall be part of the Contract Documents for the above referenced **RFP #8665**.
2. This Addendum amends or supplements the RFP Documents. All provisions which are not so amended or supplemented remain in full force and effect.
3. Each Proposer shall be responsible for determining that it has received all Addenda issued and shall acknowledge receipt of all Addenda on the Addendum Acknowledgment Form (see Attachment C). Failure to do so may subject the Proposer to disqualification.

The Contract Documents are hereby amended as follows:

1) Add the following new subsection to Specification 31 23 23.15B Trench Backfill:

2.06 BACKFILL ABOVE PIPE ZONE

A. Backfill above the crushed stone pipe zone material, but below the select pavement sub-base material, may be excavated material from the site provided it is geotechnically suitable. It shall be of such a nature and character that it can be compacted to the specified densities in a reasonable amount of time. Backfill material shall also meet the following requirements:
   1. Backfill material shall be free from rocks greater than 6-inch diameter, from roots, stumps and other organic matter, ashes, cinders, trash, debris, and other deleterious materials.
   2. Backfill material shall not contain more than 25 percent by weight of silt and clay.
   3. Excavated material that does not meet these requirements will not be deemed suitable for backfill, will be disposed of off-site, and imported material meeting the requirements will be provided.
   4. All costs for providing backfill above the pipe zone, whether using suitable excavated material from the project site or imported material, including disposal of surplus excavated material off-site, will be deemed included in the existing unit price bid for

235 GRAND STREET • WATERBURY, CONNECTICUT 06702 • PHONE: (203) 574-6749 • FAX: (203) 597-3437

the applicable pipe item in accordance with Specification 01 29 00 (Payment Procedures).

2) In Section 31 23 23.15B Trench Backfill, Delete Paragraph 3.07 A.1 and Replace with the following:

1. Process excavated material to meet requirements of Item 2.06 A.

3) All references to 15-inch Diameter PVC C900 (DR 25) pipe in the Contract Documents are hereby changed to 16-inch Diameter PVC C905 (DR 25). Bid Items 3.4 and 3.5 shall be based on providing 16-inch Diameter PVC C905 (DR 25).

4) Add the following sentence at the end of Specification 31 23 23.15, Paragraph 3.08.C.1:

Frequency of compaction testing may be lessened by Engineer if Contractor's compaction methods demonstrate a pattern of consistently meeting required compaction levels.

In Specification 31 23 23.15, Paragraph 3.07.B.2, Delete '92 percent' and Replace with '95 percent'.

Please refer to the questions and answers below.

Question: Please confirm that it is the Cities intent for the contractor to backfill the trench with the excavated soil. There is no gravel replacement item.
Answer: All pipe bedding and pipe zone material (up to 12" above the top of the pipe) shall be crushed stone per the TYPICAL GRAVITY SEWER TRENCH DETAIL on Drawing C-009 and per the TYPICAL GRAVITY SEWER CONNECTIONS detail on Drawing C-010. Backfill above the crushed stone pipe zone material may be excavated material provided it is geotechnically suitable. The following specification sections have been modified to clarify the requirements related to the backfill of geotechnically suitable excavated material.

Add the following new subsection to Specification 31 23 23.15B Trench Backfill:
2.06 BACKFILL ABOVE PIPE ZONE

A. Backfill above the crushed stone pipe zone material, but below the select pavement sub-base material, may be excavated material from the site provided it is geotechnically suitable. It shall be of such a nature and character that it can be compacted to the specified densities in a reasonable amount of time. Backfill material shall also meet the following requirements:
    5. Backfill material shall be free from rocks greater than 6-inch diameter, from roots, stumps and other organic matter, ashes, cinders, trash, debris, and other deleterious materials.
    6. Backfill material shall not contain more than 25 percent by weight of silt and clay.

7. Excavated material that does not meet these requirements will not be deemed suitable for backfill, will be disposed of off-site, and imported material meeting the requirements will be provided.
8. All costs for providing backfill above the pipe zone, whether using suitable excavated material from the project site or imported material, including disposal of surplus excavated material off-site, will be deemed included in the existing unit price bid for the applicable pipe item in accordance with Specification 01 29 00 (Payment Procedures).

In Section 31 23 23.15B Trench Backfill, Delete Paragraph 3.07 A.1 and Replace with the following:

2. Process excavated material to meet requirements of Item 2.06 A.

Question: Please provide us with the actual boring logs for the project. / At the Prebid there was mentioned that soil borings were performed. Can these be provided?
Answer: Boring logs are attached and will be included in the Conformed Contract Documents.

Question: Please clarify that the contractor will be allowed to work in the winter based on availability of hot mix and recycled hot mix asphalt.
Answer: Refer to Notes 1 and 2 on Sheet C-007. Performing work that requires paving beyond the November 15th cut-off date will require approval by the City. A winter settlement period of at least three months is required prior to cold planning and overlay pavement.

Question: We have just been informed by one of our pipe manufactures that 15" PVC C900 DR25 is not made. Please advise all bidders of what pipe size / pipe material you wish to use instead.
Answer: All references to 15-inch Diameter PVC C900 (DR 25) pipe in the Contract Documents are hereby changed to 16-inch Diameter PVC C905 (DR 25). Bid Items 3.4 and 3.5 shall be based on providing 16-inch Diameter PVC C905 (DR 25).

Question: Is there State Funding involved and any MBE/DBE/SBE goals to meet?
Answer: The project is not being funded by CWSRF financing. However, Contractor's attention is directed to the Chapter 34 City Policy regarding Hiring of Waterbury Residents on Certain Publicly-Funded Construction Projects. Also refer to the sample construction contract that the awarded bidder will be expected to enter into with the City of Waterbury, which is included in the Specifications.

Question: What is the anticipated Notice of Award date and when will the contractor be expected to begin construction?
Answer: Refer to the Legals sections of the contract specifications, including but not limited to Section H of the Request for Proposal.

Question: Please confirm that the old sewer to be abandoned in place does not require any crushing, backfilling, or flowable fill.
Answer: The existing sanitary sewer shall be abandoned in-place as follows: For existing sewer manholes along the existing 10-inch sanitary sewer located between SMH 4A and SMH-11, Contractor shall remove and dispose of the top five (5) feet of the existing structure, including the existing frame and cover and upper portion of the structure, fill the remaining structure with concrete flowable fill (max 150 psi compressive strength at 28 days), and backfill with gravel up to the pavement sub-base material. Provide watertight plugs in the inlet and outlet of each existing manhole to be abandoned prior to filling the structure with concrete flowable fill.

Question: Will there be bypass pumping of existing sanitary sewer flows required?
Answer: Refer to Sheet G-002 General Note No. 11. The Contractor shall be responsible for maintaining existing flows in existing sanitary sewers, sewer service laterals and storm drainage systems. The Contractor shall provide a submittal for review by the Engineer detailing proposed methods for maintaining existing flows.

Question: How often does the road need to be temporary asphalt patched? Every day, or is once or twice per week acceptable?
Answer: Refer to Sheet C-007 Note 1. 2-inch thick temporary trench repair pavement shall be provided at the end of each work week.

Question: The specifications state that excavation can't continue once the asphalt plants are closed. Certain plants produce hot mix asphalt through the winter, and there are also several smaller companies that produce Winter Asphalt. Assuming that product is available, can the contractor use this as temporary patch to allow work to continue through the winter?
Answer: Excavation work may proceed provided asphalt plants are open. However, please refer to Notes 1 and 2 on Sheet C-007. Performing work that requires paving beyond the November 15th cut-off date will require approval by the City. A winter settlement period of at least three months is required prior to cold planning and pavement overlay.

Question: The plans and specifications are written such that the it assumes the material for the 20' deep excavation is suitable for reuse as backfill into the trench. In the event that the material is unsuitable:
1. Will the contractor be paid for suitable offsite material that needs to be imported?
2. Will the contractor be paid for unsuitable trench material that needs to be hauled and disposed of off-site?
Answer: Refer to answer to similar Question 1 above. All costs for providing backfill above the pipe zone, whether using suitable excavated material from the project site or imported material, including disposal of surplus excavated material off-site, will be deemed included in the existing

unit price bid for the applicable pipe item in accordance with Specification 01 29 00 (Payment Procedures).

Question: Please clarify the soil compaction test specification in section 31 23 23.15 - 8 section 3.08C. This section calls for 2 tests at every 2 vf of backfill. There is no length interval given such as every 500 lf or once per week. So, the way the spec. is written the contractor would be required to have a full-time compaction technician on site which is not the norm.
Answer: Frequency of compaction testing may be lessened by Engineer if Contractor's compaction methods demonstrate a pattern of consistently meeting required compaction levels.

Add the following sentence at the end of Specification 31 23 23.15, Paragraph 3.08.C.1:

Frequency of compaction testing may be lessened by Engineer if Contractor's compaction methods demonstrate a pattern of consistently meeting required compaction levels.

In Specification 31 23 23.15, Paragraph 3.07.B.2, Delete '92 percent' and Replace with '95 percent'.

Question: The proposal requirements section lists out 7 points which questions for each, is there a pre-made form we are to fill out, or simply just answer all of these questions on our own letterhead?
Answer: Prospective bidders should provide the required information in Section I (Proposal Requirements and Required Format) of the Request for Proposal on the firm's letterhead.

Question: Are 5 copies of the bid documents really necessary?
Answer: Please provide 5 copies of response, including all filled-in attachments, NOT 5 copies of all of the RFP documents issued.

Question: Specs say to complete and return attachment A, can we leave out the company resolution as this is not to be filled out until time of contract signing?
Answer: Correct.

Question: Can you provide a list of the contractors at the mandatory pre-bid meeting?
Answer: Please see attached.

NOTE: Each Proposal over $50,000.00 submitted shall be accompanied by a Proposal Security (a Certified Check or Bid Bond) in the amount of ten (10) percent of the Total Proposal Price.

Thank you.
Maureen McCauley
Assistant Director of Purchasing – City of Waterbury

LOG OF TEST BORING

Jacobs

PROJECT	Trumpet Brook	BORING NO.	B-1
LOCATION	Waterbury, CT		SHEET 1 OF 1
OWNER	City of Waterbury		
JOB NUMBER	D7088EN		

INSPECTOR	J. Cutone	CONTRACTOR	Soiltesting Inc.	DRILLER	Mike Kennedy	ELEVATION	379.5
METHOD OF DRILLING		GROUNDWATER READINGS		DRILL RIG	D-50 Diedrich	DATUM	NAVD 88
0.0	Hollow Stem Auger	DATE/TIME	DEPTH(ft) REMARKS	SPT HAMMER	140 lb Safety	GRID	N
15.7	Terminated	06-19-2025 / 0800	7.2 Upon Completion (In Augers)			COORD	E
						DATE START	6/19/25
						DATE END	6/19/25

ELEV. (ft)	DEPTH (ft)	SAMPLE DATA	N-VALUE	SAMPLE NO.	DEPTH INTERVAL (ft)	PEN/REC (in)/(in)	PID (ppm)	LAYER NAME	SOIL AND ROCK DESCRIPTION	NOTES
									0.5 6" ASPHALT	
		18 24 18 17	42	S-1	0.5 - 2.5	24/18		FILL	S-1A (Top 6"): Dry, brown, fine to coarse SAND, some fine Gravel, little Silt. S-1B (Bot 12"): Dry, brown, fine to coarse SAND and fine to coarse GRAVEL, trace Silt. [Laboratory Testing Performed (S-1A)- Particle Size Analysis (Sieve Only): Gravel = 32.0%, Sand = 53.5%, Silt and Clay = 14.5%]	
		16 22 12 8	34	S-2	2.5 - 4.5	24/16			S-2: Dry, dense, brown, fine to coarse SAND, some Silt, trace Gravel. [Laboratory Testing Performed- Particle Size Analysis (Sieve Only): Gravel = 7.2%, Sand = 58.8%, Silt and Clay = 34.0%]	
375	5	4 3 2 8	5	S-3	5 - 7	24/9			S-3A (Top 3"): Dry, brown, fine to coarse SAND, some Silt, trace Gravel. S-3B (Bottom 6"): Dry, light brown, fine to coarse SAND, some fine to medium Gravel, trace Silt.	
		12 5 9 8	14	S-4	7 - 9	24/15		7	S-4: Wet, medium dense, brown, fine SAND and SILT, trace Gravel. [Laboratory Testing Performed- Particle Size Analysis (Sieve Only): Gravel = 0.5%, Sand = 54.4%, Silt and Clay = 45.1%]	1 2
370	10	100/2"	100/2"	S-5	9 - 9.2	2/2		SAND	S-5: Wet, very dense, brown, fine SAND, some Silt, trace Gravel.	
365	15	100/8"	100/8"	S-6	15 - 15.7	8/8		15.7	S-6: Wet, very dense, brown, fine SAND, some Silt, trace Gravel. Bottom of Borehole at 15.7 feet.	3 4
360	20									
355	25									
350	30									
345	35									

Page 1: 0-35 feet. Each subsequent page displays 40 feet.

NOTES

1. Hard drilling 9 to 13 ft, probable cobbles.
2. Groundwater at approximately 7 ft deep based on sample moisture content.
3. Rock fragments in spoon tip
4. Upon completion, hole backfilled with soil cuttings, cold patch at surface.

LOG OF TEST BORING

Jacobs

PROJECT	Trumpet Brook	BORING NO.	B-2
LOCATION	Waterbury, CT		SHEET 1 OF 1
OWNER	City of Waterbury		
JOB NUMBER	D7088EN		

INSPECTOR	J. Cutone	CONTRACTOR	Soiltesting Inc.	DRILLER	Mike Kennedy	ELEVATION	386.0
METHOD OF DRILLING		GROUNDWATER READINGS		DRILL RIG	D-50 Diedrich	DATUM	NAVD 88
0.0	Hollow Stem Auger	DATE/TIME	DEPTH(ft) REMARKS	SPT HAMMER	140 lb Safety	GRID N	
22.0	Terminated	06-19-2025 / 1000	11.2 Upon Completion (In Augers)			COORD E	
						DATE START	6/19/25
						DATE END	6/19/25

ELEV. (ft)	DEPTH (ft)	SAMPLE DATA	N-VALUE	SAMPLE NO.	DEPTH INTERVAL (ft)	PEN/REC (in)/(in)	PID (ppm)	LAYER NAME	SOIL AND ROCK DESCRIPTION	NOTES
								0.6	7" ASPHALT	
385		35 35 39 40	74	S-1	0.6 - 2.6	24/22		FILL	S-1: Dry, very dense, light brown, fine to coarse SAND, some Silt, trace Gravel. [Laboratory Testing Performed- Particle Size Analysis (Sieve Only): Gravel = 9.0%, Sand = 65.3%, Silt & Clay = 25.7%]	
		10 26 31 71	57	S-2	2.6 - 4.6	24/22		4	S-2: Dry, very dense, brown, fine to coarse SAND and fine to coarse GRAVEL, trace Silt.	
	5	7 15 24 24	39	S-3	4.6 - 6.6	24/21			S-3: Dry, dense, brown, fine to coarse SAND, some fine to coarse Gravel, trace Silt.	1
380		22 20 42 35	62	S-4	6.6 - 8.6	24/22			S-4: Dry, very dense, brown, fine to coarse GRAVEL, some fine to coarse Sand, trace Silt.	
		16 26 21 22	47	S-5	8.6 - 10.6	24/16			S-5: Dry, dense, brown, fine to coarse SAND, some fine to coarse GRAVEL, little Silt. [Laboratory Testing Performed- Particle Size Analysis (Sieve Only): Gravel = 30.5%, Sand = 51.5%, Silt & Clay = 18.0%]	
	10									
375		21 33 46 57	79	S-6	10.6 - 12.6	24/18		SAND AND GRAVEL	S-6: Wet, very dense, brown, fine to coarse SAND, and fine Gravel, little Silt.	2
	15	15 37 40 47	77	S-7	15 - 17	24/17			S-7: Wet, very dense, brown, fine to coarse SAND and fine to coarse GRAVEL, little Silt.	
370										
	20	21 36 50 70	86	S-8	20 - 22	24/23			S-8: Wet, very dense, brown, fine to coarse SAND, little fine Gravel, little Silt.	3
365								22	Bottom of Borehole at 22 feet.	4
	25									
360										
	30									
355										
	35									

Page 1: 0-35 feet. Each subsequent page displays 40 feet.

NOTES

1. Hard drilling from 4 to 6 ft, probable cobbles.
2. Groundwater at approximately 10 ft deep based on sample moisture content.
3. Hard drilling 20' to 25' through dense soil.
4. Upon completion, hole backfilled with soil cuttings, cold patch at surface.

LOG OF TEST BORING

Jacobs	PROJECT	Trumpet Brook	BORING NO.	B-3			
	LOCATION	Waterbury, CT		SHEET 1 OF 1			
	OWNER	City of Waterbury					
	JOB NUMBER	D7088EN					
INSPECTOR J. Cutone	CONTRACTOR	Soiltesting Inc.	DRILLER	Mike Kennedy	ELEVATION	384.0	
METHOD OF DRILLING	GROUNDWATER READINGS		DRILL RIG	D-50 Diedrich	DATUM	NAVD 88	
0.0 Hollow Stem Auger	DATE/TIME	DEPTH(ft) REMARKS	SPT HAMMER	140 lb Safety	GRID	N	
22.0 Terminated	06-20-2025 / 0900	11.6 Upon Completion (In Augers)			COORD	E	
					DATE START	6/20/25	
					DATE END	6/20/25	

ELEV. (ft)	DEPTH (ft)	SAMPLE DATA	N-VALUE	SAMPLE NO.	DEPTH INTERVAL (ft)	PEN/REC (in)/(in)	PID (ppm)	LAYER NAME	SOIL AND ROCK DESCRIPTION	NOTES
								0.5	6" ASPHALT	
		40 44 43 36	87	S-1	0.5 - 2.5	24/15		FILL	S-1: Dry, very dense, brownish gray, fine to coarse GRAVEL and fine to coarse Sand, trace Silt. [Laboratory Testing Performed- Particle Size Analysis (Sieve Only): Gravel = 50.2%, Sand = 40.0%, Silt & Clay = 9.8%]	
								3		
380		15 16 24 27	40	S-2	3 - 5	24/18			S-2: Dry, dense, brown, fine to coarse SAND, little fine to coarse Gravel, little Silt.	
	5	20 41 26 31	67	S-3	5 - 7	24/14			S-3: Dry, very dense, brown, fine to coarse SAND, little fine to coarse Gravel, little Silt.	
		27 29 39 44	68	S-4	7 - 9	24/18			S-4: Moist, very dense, brown, fine to coarse SAND, little fine to coarse Gravel, little Silt.	
375										
	10	36 100/4"	100/4"	S-5	10 - 10.8	11/4		SAND AND GRAVEL	S-5: Wet, very dense, brown, fine to coarse SAND, some fine to coarse Gravel, little Silt.	1 2
370										
	15	42 64 59 49	123	S-6	15 - 17	24/20			S-6: Wet, very dense, brown, fine to coarse SAND, some fine to coarse Gravel, some Silt. [Laboratory Testing Performed - Particle Size Analysis (Sieve Only): Gravel = 30.4%, Sand = 46.1%, Silt & Clay = 23.5%]	
365										
	20	19 25 26 27	51	S-7	20 - 22	24/24			S-7: Wet, very dense, brownish gray, fine SAND, some Silt, little fine to coarse Gravel.	3
								22	Bottom of Borehole at 22 feet.	
360										
	25									
355										
	30									
350										
	35									

Page 1: 0-35 feet. Each subsequent page displays 40 feet.

NOTES

1. Hard drilling, probable cobbles.
2. Groundwater at approximately 10 ft deep based on sample moisture content.
3. Upon completion, hole backfilled with soil cuttings, cold patch at surface.

LOG OF TEST BORING

Jacobs

PROJECT	Trumpet Brook	BORING NO.	B-4
LOCATION	Waterbury, CT		SHEET 1 OF 1
OWNER	City of Waterbury		
JOB NUMBER	D7088EN		

INSPECTOR	J. Cutone	CONTRACTOR	Soiltesting Inc.	DRILLER	Mike Kennedy	ELEVATION	379.0
METHOD OF DRILLING		GROUNDWATER READINGS		DRILL RIG	D-50 Diedrich	DATUM	NAVD 88
0.0	Hollow Stem Auger	DATE/TIME	DEPTH(ft) REMARKS	SPT HAMMER	140 lb Safety	GRID N	
22.0	Terminated	06-19-2025 / 1400	15.2 Upon Completion (In Augers)			COORD E	
						DATE START	6/19/25
						DATE END	6/19/25

ELEV. (ft)	DEPTH (ft)	SAMPLE DATA	N-VALUE	SAMPLE NO.	DEPTH INTERVAL (ft)	PEN/REC (in)/(in)	PID (ppm)	LAYER NAME	SOIL AND ROCK DESCRIPTION	NOTES
								1	8" ASPHALT 4" Crushed Stone below Asphalt	
		16 20 26 23	46	S-1	1 - 3	24/23		FILL	S-1: Dry, dense, brownish gray, fine to coarse SAND, some fine GRAVEL, some Silt. [Laboratory Testing Performed - Particle Size Analysis (Sieve Only): Gravel = 22.9%, Sand = 54.8%, Silt & Clay = 22.3%]	
375		19 20 18 11	38	S-2	3 - 5	24/13			S-2: Dry, dense, brown, fine to coarse SAND, some fine Gravel, trace Silt.	
	5	8 11 12 12	23	S-3	5 - 7	24/24		5	S-3: Dry, medium dense, brown, fine to coarse SAND, some Silt, little fine Gravel.	
		13 15 19 26	34	S-4	7 - 9	24/22			S-4: Dry, dense, brown, fine to coarse SAND, little Silt, little fine Gravel.	
370	10	10 15 17 19	32	S-5	10 - 12	24/23		SAND	S-5: Similar to S-4.	
365		7 14 18 24	32	S-6	15 - 17	24/24			S-6: Wet, dense, brown, fine SAND and SILT, trace Gravel. [Laboratory Testing Performed - Particle Size Analysis (Sieve Only): Gravel = 8.5%, Sand = 50.8%, Silt & Clay = 40.7%]	1
360	20	24 29 27 30	56	S-7	20 - 22	24/22			S-7: Wet, very dense, brown, fine to medium SAND, some Silt, little fine Gravel.	2
								22	Bottom of Borehole at 22 feet.	
355	25									
350	30									
345	35									

Page 1: 0-35 feet. Each subsequent page displays 40 feet.

NOTES

1. Groundwater at approximately 15 ft deep based on sample moisture content.
2. Upon completion, hole backfilled with soil cuttings, cold patch at surface.

LOG OF TEST BORING

Jacobs

PROJECT	Trumpet Brook	BORING NO.	B-5
LOCATION	Waterbury, CT		SHEET 1 OF 1
OWNER	City of Waterbury		
JOB NUMBER	D7088EN		

INSPECTOR	J. Cutone	CONTRACTOR	Soiltesting Inc.	DRILLER	Mike Kennedy	ELEVATION	354.0
METHOD OF DRILLING		GROUNDWATER READINGS		DRILL RIG	D-50 Diedrich	DATUM	NAVD 88
0.0	Hollow Stem Auger	DATE/TIME	DEPTH(ft) REMARKS	SPT HAMMER	140 lb Safety	GRID N	
15.0	Terminated	06-20-2025 / 1200	15.0 Upon Completion (In Augers)			COORD E	
						DATE START	6/20/25
						DATE END	6/20/25

ELEV. (ft)	DEPTH (ft)	SAMPLE DATA	N-VALUE	SAMPLE NO.	DEPTH INTERVAL (ft)	PEN/REC (in)/(in)	PID (ppm)	LAYER NAME	SOIL AND ROCK DESCRIPTION	NOTES
								0.6	7" ASPHALT	
		18 13 9 10	22	S-1	1 - 3	24/20		FILL	S-1: Dry, medium dense, brown, fine to coarse SAND, some Silt, some fine Gravel. [Laboratory Testing Performed - Particle Size Analysis (Sieve Only): Gravel = 20.5%, Sand = 54.3%, Silt & Clay = 25.2%]	
350		100/12"	100/12"	S-2	3 - 4	12/6		4	S-2: Dry, very dense, gray, fine to coarse GRAVEL and fine to coarse SAND, trace Silt. [Laboratory Testing Performed - Particle Size Analysis (Sieve Only): Gravel = 45.4%, Sand = 45.3%, Silt & Clay = 9.3%]	
	5	30 12 18 25	30	S-3	5 - 7	24/14		SAND AND GRAVEL	S-3: Dry, medium dense, brown, fine to coarse SAND, little fine Gravel, little Silt.	
345		28 41 27 30	68	S-4	7 - 9	24/16			S-4: Dry, very dense, brown, fine to coarse SAND, little fine Gravel, little Silt.	
	10	10 26 28 50/1"	54	S-5	10 - 11.6	19/19			S-5: Dry, very dense, brown, fine to coarse SAND, some fine to coarse Gravel, little Silt.	1
		21 30 31 32	61	S-6	13 - 15	24/24			S-6: Moist, very dense. brown, fine to coarse SAND, some fine to coarse Gravel, little Silt.	2
340		▼ 15						15	Bottom of Borehole at 15 feet.	3
335	20									
330	25									
325	30									
320	35									

Page 1: 0-35 feet. Each subsequent page displays 40 feet.

NOTES

1. 1.5' thick boulder from 11.5' to 13', hard drilling.
2. Groundwater at approximately 15 ft deep based on sample moisture content.
3. Upon completion, hole backfilled with soil cuttings.

REQUEST FOR PROPOSAL # 8665
Trumpet Brook Sewer Relocation
Pre-Bid Information Session and Walk-Through
July 22, 2026 – 10:00 AM

THE CITY OF WATERBURY, CONNECTICUT
WATER POLLUTION CONTROL

Name	Company Name and Address	Phone Number	E-Mail Address
Keith Sullivan	Dayton Const Co, Inc	203-996-9920	Keith@Dayton-Construction.com
Jaime Lessne	Gerber Construction Inc 1 Nutmeg Dr Ellington CT 06029	860-875-6684	evan@gerber.build
Bob CAMPANARO	COASTLINE CONST COR P.	860-669-5058	BOB@COASTLINE CONSTRUCTION CORP .COM
Rick Domina	EJ Prescott	860-875 9711	Rick.Domina@EJPrescott.com
Joseph Michelangelo	Grasso Companies	203-767-4876	JM@grassoconstruction.com

Name	Company Name and Address	Phone Number	E-Mail Address
Cody Murray	Colonna Masonry Concrete + Asphalt LLC	617-890-9456	Cody@colonnaconcrete.com
Chris Ward	Sunset Vally Construction	203 240 5357	chris@~~sunsetvalley~~SVconstruction.com
Joe Underkofler	Ludlow Construction	413 583 2522	pfragoso@ludlowconstruction.com
Chase Anderson	Genovesi Construction	860-933-1183	canderson@genovesiconstruction.com
Mark Granger	Baltazar Contractors	413-583-6160 6140	DBaltazar@BaltazarContractors.com
Andy PALKER PALKER EXC	PALKER EXC	860-309-6678	PALKEREXC@YAHOO.COM
Andy PALKER Guy MANCHESTER	PALKER EXCAVATING J.V. W.W. MANCHESTER CONST. BRUSH	860-3096678	PALKEREXC @YAHOO.COM

ORIGINAL

COASTLINE CONSTRUCTION CORP.

P.O. Box 910
Clinton, Ct 06413
Phone: (860) 669-5058 Fax: (860) 669-7004
www.coastlineconstructioncorp.com

RFP 8665 Trumpet Brook Sewer Relocation

Price Proposal Form (00 41 00-1 – 3)	Pages 1-3
Attachment A w/ Listed Documentation	Pages 4-15
Attachment C	Page 16
Bid Bond	Page 17-18
Proposer Information Requested by City	Pages 19-30

REQUEST FOR PROPOSAL RFP 8665
TRUMPET BROOK SEWER RELOCATION
SECTION 00 41 00
PRICE PROPOSAL FORM

ITEM		TYPE OF COST	EST. QTY	UNIT PRICE	EXTENDED COST
1.0	Mobilization / Demolition	LUMP SUM	1	62,689.00	62,689.00
2.0	General Requirements	LUMP SUM	1	50,000.00	50,000.00
3.1	10-inch Diameter C900 (DR 25) PVC Sanitary Sewer, Less than or equal to 12-feet deep	LF	130	600.00	78,000.00
3.2	10-inch Diameter C900 (DR 25) PVC Sanitary Sewer, Greater than 12-feet deep	LF	80	610.00	48,800.00
3.3	10-inch Diameter Epoxy-Lined DI Sanitary Sewer, Greater than 12-feet deep	LF	225	684.00	153,900.00
3.4	15-inch Diameter PVC C900 (DR 25) PVC Sanitary Sewer, Less than or equal to 12-feet deep	LF	50	620.00	31,000.00
3.5	15-inch Diameter PVC C900 (DR 25) PVC Sanitary Sewer, Greater than 12-feet deep	LF	635	640.00	406,400.00
4.0	6-inch Diameter Sanitary Sewer Services	LF	500	280.00	140,000.00
5.0	Sanitary Sewer Service Chimneys	VF	200	552.00	110,400.00
6.1	4-foot Diameter Sanitary Sewer Manholes	VF	150	1,400.00	210,000.00
6.2	5-foot Diameter Sanitary Sewer Manholes	VF	35	1,600.00	56,000.00
7.1	18-inch Diameter RCP Drain Pipe	LF	300	345.00	103,500.00
7.2	12-inch Diameter RCP Drain Pipe	LF	50	320.00	16,000.00
8.0	Storm Drain Manholes	VF	25	1,775.00	44,375.00

9.0	Exploratory Excavation	CY	25	500.00	12,500.00
10.0	Rock Excavation	CY	25	800.00	20,000.00
11.0	Excavation of Unsuitable Material Below Grade	CY	25	500.00	12,500.00
12.1	Temporary HPB (2-inch depth)	TON	104	700.00	72,800.00
12.2	HBP – Permanent Class 4 (6-inch depth, Bunker Hill Ave Only)	TON	160	600.00	96,000.00
12.3	HBP – Class 1 (4-inch depth)	TON	172	160.00	27,520.00
12.4	HBP – Overlay, Class 1 (2-inch depth)	TON	704	154.00	108,416.00
12.5	HBP – Hand Method for Driveways (2-inch depth)	TON	50	580.00	29,000.00
13.0	Bituminous Excavation by Cold Planing	SY	6050	4.00	24,200.00
14.0	Maintenance and Protection of Traffic	LUMP SUM	1	15,000.00	15,000.00
15.0	Uniformed Police	ALLOWANCE	1	$300,000	300,000.00
16.0	Certified Traffic Control Flag Persons	HR	1000	78.00	78,000.00
17.0	Utility Support and Coordination	LS	1	30,000.00	30,000.00
18.0	Electric Utility Fees	ALLOWANCE	1	$50,000	50,000.00
TOTAL PRICE PROPOSAL ITEMS 1.0 – 18.0 (in numbers)		Two million three hundred eighty seven thousand dollars and no cents			
TOTAL PRICE PROPOSAL ITEMS 1.0 – 18.0 (in words)		**$ 2,387,000.00**			

In the event of mathematically incorrect calculations of individual items or totals, the mathematically correct amount using the estimated quantities and unit prices (in words) shall govern in determining the TOTAL PRICE PROPOSAL.

The undersigned also agrees that the quantities indicated are for Proposal comparison purposes only and are not represented to be actual quantities for completion of the Work.

The undersigned hereby certifies under the penalties of perjury that this Proposal is in all respects bona fide, fair and made without collusion or fraud with any other person. As used in this section, the work "person" shall mean any natural person, joint venture, partnership, corporation, or other business or legal entity.

06-1346534
Social Security Number
or Federal Identification Number

Signature of Individual or
Corporate Name: Coastline Construction Corp

Corporate Officer
(if applicable) Robert T. Campanaro

Notice of acceptance should be mailed, telegraphed or delivered to the (undersigned Proposer at the following address):

Robert T. Campanaro
(Name)

By: Vice President
(Title)

PO Box 910
(Business Address)

Clinton, Ct 06413
(City, State, Zip Code)

Date Aug. 6, 2026

Note: If the Proposer is a corporation, indicate State of incorporation under signature, and affix corporate seal; if a partnership, give full names and residential addresses, if different from business address.

The following documents are attached to and made a condition of the Proposal:

a. Request for Proposal - Section 00 11 17
b. Price Proposal Form - Section 00 41 00
c. Technical Specifications - Divisions 00 through 50, inclusive

END OF SECTION

ATTACHMENT A DOCUMENT

- ANNUAL STATEMENT OF FINANCIAL INTEREST
- DEBARMENT CERTIFICATE
- DISCLOSURE AFFIDAVIT
- CORPORATE RESOLUTION
- LIMITED LIABILITY COMPANY RESOLUTION

CITY OF WATERBURY
ANNUAL STATEMENT OF FINANCIAL INTERESTS (Calendar Year 202 6)
Persons or Entities Conducting Business with the City

I. Outstanding Purchase Orders of Contracts with the City

A. Contracts

No Contracts with the City [X]

(Service or Commodity Covered by Contract)

(Term of Contract)

(Service or Commodity Covered by Contract)

(Term of Contract)

(Service or Commodity Covered by Contract)

(Term of Contract)

CITY OF WATERBURY
ANNUAL STATEMENT OF FINANCIAL INTERESTS (Calendar Year 2026)
Persons or Entities Conducting Business with the City

B. Purchase Order(s).

No Purchase Order(s) with the City [X]

(Service or Commodity Covered by Purchase Order)

(Date of Purchase Order)

(Service or Commodity Covered by Purchase Order)

(Date of Purchase Order)

(Service or Commodity Covered by Purchase Order)

(Date of Purchase Order)

CITY OF WATERBURY
ANNUAL STATEMENT OF FINANCIAL INTERESTS (Calendar Year 202 6)
Persons or Entities Conducting Business with the City

II. Financial Interest Disclosure

(Public Officials, Employees or Board and Commission Members with interest in Person or Entity Conducting Business with the City)

No Officials, Employees or Board and Commission Members with Financial Interest [X]

(Name of Official)

(Position with City)

(Nature of Business Interest)
(e.g. Owner, Director etc...)

Interest Held By:
Self ☐ Spouse ☐ Joint ☐ Child ☐

(Name of Official)

(Position with City)

(Nature of Business Interest)
(e.g. Owner, Director etc...)

Interest Held By:
Self ☐ Spouse ☐ Joint ☐ Child ☐

1. I certify that this Annual Statement of Financial Interests is a complete and accurate statement of those matter required to be disclosed by me pursuant to §39.061 of the Code of Ordinances.

2. I understand that if I fail to file an Annual Statement (or amendment thereto) or an inaccurate Statement I will be in violation with Chapter 39 of the Code of Ordinance and, thereby, subject to the remedies set forth in §§38.71 and 39.101 of said Code.

3. I understand that I must file with the City Clerk, within fifteen (15) days following any reportable occurrence, any amendments to the Annual Statement.

I have read and agree to the above certification.

Coastline Construction Corp
(Name of Company, if applicable)

Signature of Individual (or Authorized Signatory)

Aug 6, 2026
Date

Robert T. Campanaro, Vice President
Print or Type Name and Title (if applicable)

DELIVERED | By Mail ☐ Hand-Delivered ☒

City of Waterbury Certification
Regarding
Debarment, Suspension, Ineligibility and Exclusion

If the transaction is Federally funded, in whole or in part (including pass through grants to state and/or municipal government), this certification is required by the regulations implementing one or more Presidential Executive Orders. If this transaction is funded by the State of Connecticut, in whole or in part, this certification is required in accordance with one or more State of Connecticut general statutes.

1. By signing and submitting the attached proposal and/or this document, the prospective lower tier participant, vendor, or contractor is providing the certification set out below.
2. The certification in this clause is a material representation of fact upon which reliance was placed when this transaction was entered into. If it is later determined that the prospective lower tier participant, vendor, or contractor knowingly rendered an erroneous certification, in addition to other remedies available to the Federal , State, or City government, the department or agency with which this transaction originated may pursue available remedies, including suspension and/or debarment.
3. The prospective lower tier participant, vendor or contractor shall provide immediate written notice to the person to which the attached proposal and/or this document is submitted if at any time the prospective lower tier participant, vendor or contractor learns that its certification was erroneous when submitted or has become erroneous by reason of changed circumstances.
4. The terms "covered transaction", "debarred", "suspended", "ineligible", "lower tier covered transaction", "participant", "person", "primary covered transaction", "principal", "proposal", and "voluntarily excluded", as used herein, have the meanings set out in the Definitions and Coverage sections of rules implementing Executive Order 12549 and/or State of Connecticut statutes and regulations. You may contact the person to which this proposal and/or this document is submitted for assistance in obtaining a copy of the foregoing.
5. The prospective lower tier participant, vendor or contractor agrees by submitting the attached proposal and/or this document that, should the proposed covered transaction be entered into, it shall not knowingly enter into any covered transaction with a person who is debarred, suspended, declared ineligible, or voluntarily excluded from participation in this covered transaction unless authorized by the department or agency with which this transaction originated.
6. The prospective lower tier participant, vendor or contractor further agrees by submitting the attached proposal and/or this document that it will include the clause titled "Certification Regarding Debarment, Suspension, Ineligibility, and Voluntary Exclusion-Lower Tier Covered Transactions", without modification, in all covered transaction and in all solicitations for covered transactions.
7. A participant in a covered transaction may rely upon the certification of a prospective participant in a covered transaction that it is not debarred, suspended, ineligible, or voluntarily excluded from the covered transaction, unless it knows that the certification is erroneous. A participant may decide the method and frequency by which it determines the eligibility of its principals. Each participant may but is not required to, check the Non-procurement List.
8. Nothing contained in the foregoing shall be construed to require establishment of a system of records in order to render in good faith the certification required herein. The knowledge and information of a participant is not required to exceed that which is normally possessed by a prudent person in the ordinary course of business dealings.
9. Except for transactions authorized under paragraph 5 herein, if a participant in a covered transaction knowingly enters into a lower tier covered transaction with a person who is suspended, debarred, ineligible, or voluntarily excluded from participation in this transaction, in addition to other remedies available to the Federal, State or Municipal government, the department or agency with which this transaction originated may pursue available remedies, including suspension and/or debarment.

Certification

(1) The prospective recipient of monies hereby certifies, by submission of its attached proposal and/or by execution of this document, that neither it nor its principles are presently debarred, suspended, proposed for debarment, declared ineligible, disqualified, or voluntarily excluded from bidding or participation in the proposed transaction by any Federal, State, or Municipal department or agency or by the statutes, regulations or ordinances of the foregoing departments and agencies.

(2) Where the prospective recipient of monies is unable to certify to any of the statements in this certification, such prospective participant shall attach a written explanation hereto.

Full Legal Name and address of Recipient, Vendor, or Contractor: Coastline Construction Corp
PO Box 910
Clinton, Ct 06413

Print Name and Title of Authorized Representative: Robert T. Campanaro, Vice President

Signature of Authorized Representative:

Date: Aug. 6, 2026

CITY OF WATERBURY
DISCLOSURE AND CERTIFICATION AFFIDAVIT REGARDING OUTSTANDING OBLIGATIONS TO THE CITY OF WATERBURY

For the purposes of this Disclosure of Outstanding Financial Obligations, the following definitions apply:

(a) "Contract" means any Public Contract as defined below.

(b) "Person" means one (1) or more individuals, partnerships, corporations, associations, or joint ventures.

(c) "Public Contract" means any agreement or formal commitment entered into by the city to expend funds in return for work, labor, services, supplies, equipment, materials or any combination of the foregoing, or any lease, lease by way of concession, concession agreement, permit, or per agreement whereby the city leases, grants or demises property belonging to the city, or otherwise grants a right of privilege to occupy or to use said property of the city.

(d) "City" means any official agency, board, authority, department office, or other subdivision of the City of Waterbury.

State of Connecticut

SS.: Clinton

County of Middlesex

Robert T. Campanaro, being first duly sworn, deposes and says that:

1. I am the ***owner, partner, officer, representative, agent or*** Vice President of Coastline Construction Corp (Contractor's Name), the Contractor that has submitted the attached agreement.

2. I am fully informed respecting the preparation and contents of the attached Agreement and of all pertinent circumstances respecting such Agreement;

3. That as a person desiring to contract with the City (check all that apply):

____ The Contractor and each owner, partner, officer, representative, agent or affiliate of the Contractor has filed a list of taxable personal property with the City of Waterbury for the most recent grand list, as required by Conn. Gen. Stat. §12-42.

__X__ Neither the Contractor nor any owner, partner, officer, representative, agent or affiliate of the Contractor are required to file a list of taxable personal property with the City of Waterbury for the most recent grand list, as required by Conn. Gen. Stat. §12-42.

__X__ Neither the Contractor nor any owner, partner, officer, representative, agent or affiliate of the Contractor either directly or through a lease agreement, owes back taxes to the City of Waterbury

CITY OF WATERBURY
DISCLOSURE AND CERTIFICATION AFFIDAVIT REGARDING OUTSTANDING OBLIGATIONS TO THE CITY OF WATERBURY

X Neither the Contractor nor any owner, partner, officer, representative, agent or affiliate of the Contractor either directly or through a lease agreement, has any other outstanding obligations to the City of Waterbury

4. The following list is a list of the names of all persons affiliated with the business of the Contractor, if none state none. Use additional sheet if necessary (Must be on company letterhead and notarized):

Name NONE	Title	Affiliated Company (if none state NONE)	Service or Material	DOB
1				
2				
3				
4				

5. That as a person desiring to contract with the City:

(a) The Contractor or an owner, partner, officer, representative, agent or affiliate of the Contractor provides, or has provided, services or materials to the City within one (1) year prior to the date of this disclosure, if none, state none. Use additional sheet if necessary (Must be on company letterhead and notarized):

Name NONE	Title	Affiliated Company (if none state NONE)	Service or Material	DOB
1				
2				
3				
4				

(b) The Contractor possesses an ownership interest in the following business organizations, if none, state none. Use additional sheet if necessary (Must be on company letterhead and notarized) :

Organization Name	Address	Type of Ownership
1 NONE		
2		
3		
4		

(c) The following persons possess an ownership interest in the Contractor. If the Contractor is a corporation, list all of the officers of the corporation and the names of each stockholder whose shares exceed twenty-five

CITY OF WATERBURY
DISCLOSURE AND CERTIFICATION AFFIDAVIT REGARDING OUTSTANDING OBLIGATIONS TO THE CITY OF WATERBURY

(25) percent of the outstanding stock, if none, state none. Use additional sheet if necessary (Must be on company letterhead and notarized):

Name	Title	DOB	Stock %
1 Louis J. Campanaro Sr	President		33 1/3%
2 Robert T. Campanaro	Vice President		33 1/3%
3 Louis J. Campanaro Jr	Secretary/Treasurer		33 1/3%
4			

(d) Of the following of the affiliates, individuals or business entities identified in this affidavit, list each that owns, owned, or within one (1) year prior to the date of this disclosure has owned, taxable property situated in the City of Waterbury, if none state none. Use additional sheet if necessary (Must be on company letterhead and notarized):

Name NONE	Title	Affiliated Company (if none state NONE)	Address	DOB
1				
2				
3				
4				

(e) If the Contractor conducts business under a trade name, the following additional information is required: the place where such entity is incorporated or is registered to conduct such business; and the address of its principal place of business, if none, state none:

TRADE NAME NONE	PLACE OF INCORPORATION/REGISTRY	PRINCIPAL PLACE OF BUSINESS
1		
2		
3		
4		

I hereby certify that the statements set forth above are true and complete, and I understand that any incorrect information or omission of information from this affidavit may result in the immediate termination of the Contractor's agreement with the City of Waterbury.

For Partnership/Sole Proprietor

In presence of:

Witness

Name of Partnership/Business

CITY OF WATERBURY
DISCLOSURE AND CERTIFICATION AFFIDAVIT REGARDING OUTSTANDING OBLIGATIONS TO THE CITY OF WATERBURY

By: _____
Name of General Partner/ Sole Proprietor

_____
Address of Business

State of _____)

) SS

County of _____)

_____ being duly sworn,

Deposes and says that he/she is _____ of _____ and that he/she answers to the foregoing questions and all statements therein are true and correct.

Subscribed and sworn to before me this _____ day of _____ 2026.

_____
(Notary Public)

My Commission Expires: _____

For Corporation

_____
Witness

Coastline Construction Corp
Name of Corporate Signatory

PO Box 910, Clinton, Ct 06413
Address of Business

Affix
Corporate
Seal

By: _____
Name of Authorized Corporate Officer
Robert T. Campanaro

Its: Vice President
Title

CITY OF WATERBURY
DISCLOSURE AND CERTIFICATION AFFIDAVIT REGARDING OUTSTANDING OBLIGATIONS TO THE CITY OF WATERBURY

State of Connecticut)

) SS Clinton

County of Middlesex)

Robert T. Campanaro being duly sworn,

deposes and says that he/she is Vice President of Coastline Construction Corp and that he/she answers to the foregoing questions and all statements therein are true and correct.

Subscribed and sworn to before me this 6th day of August 2026.

Rebecca Howard

Rebecca Howard(Notary Public)

My Commission Expires: September 30, 2028

REBECCA HOWARD NOTARY PUBLIC MY COMM. EXP. 09/30/2028 CONNECTICUT

COASTLINE CONSTRUCTION CORP.

P.O. Box 910
Clinton, Ct 06413
Phone: (860) 669-5058 Fax: (860) 669-7004
www.coastlineconstructioncorp.com

CORPORATE RESOLUTION

I, Louis J. Campanaro, Jr., hereby certify that I am the duly elected and acting Secretary of Coastline Construction Corp., a corporation organized and existing under the laws of the State of Connecticut, do hereby certify that the following facts are true and were taken from the records of said corporation.

The following resolution was adopted at a meeting of the corporation duly held on the 31st day of July, 2026.

"It is hereby resolved that Robert T. Campanaro or Louis J. Campanaro Sr. is authorized to make, execute and approve, on behalf of this corporation, any and all contracts or amendments thereof".

And I do further certify that the above resolution has not been in any way altered, amended, repealed and is now in full force and effect.

IN WITNESS WHEREOF, I hereunto set my hand and affix the corporate seal of said Coastline Construction Corp this 31st day of July, 2026.

Louis J. Campanaro Jr
Secretary/Treasurer
Coastline Construction Corp.

FILL IN AND RETURN WITH YOUR SUBMISSION

ATTACHMENT C

KEVIN MC CAFFERY
DIRECTOR OF PURCHASING
235 GRAND STREET, ROOM 103
WATERBURY, CT 06702

The undersigned declares that the only persons or parties interested in this Proposal as principals are as stated; that the Proposal is made without any collusion with other persons, firms, or corporations; that Proposer has carefully examined the entire Request for Proposal; that Proposer has informed itself fully in regard to all conditions pertaining to the Work and the place where it is to be performed; and that with this representation, the undersigned makes this Proposal. These prices shall cover all expenses incurred in performing the Work required under the Contract Documents, of which this Proposal and Form are a part.

The undersigned agrees and covenants that the Contract Time shall commence on delivery of the City of Waterbury's written notice to proceed, which shall occur after contract execution by both parties.

The undersigned acknowledges receipt of addenda numbered: (insert date)

1 07/30/2026 4 _____

2 _____ 5 _____

3 _____ 6 _____

All Work for this Project shall be performed at the Proposal Prices as described in the Proposal Documents.

The undersigned hereby certifies under the penalties of perjury that this Proposal is in all respects bona fide, fair and made without collusion or fraud with any other person. As used in this section, the work "person" shall mean any natural person, joint venture, partnership, corporation, or other business or legal entity.

06-1346534
Social Security Number
or Federal Identification Number

Coastline Construction Corp
Signature of Individual or Corporate Name

Corporate Officer (if applicable) Robert T. Campanaro
Vice President

City notice of acceptance should be mailed, telegraphed or delivered to the undersigned Proposer at the following address:

Name Robert T. Campanaro
By: Vice President
(Title)
Business Address: 145 E Main St, PO Box 910
(City, State, Zip Code)
Clinton, Ct 06413

Phone: 860-669-5058
Email: bob@coastlineconstructioncorp.com
Date: August 6, 2026

Note: If the Proposer is a corporation, indicate State of incorporation under signature, and affix corporate seal; if a partnership, give full names and residential addresses, if different from business address.

Document A310™ – 2010

Conforms with The American Institute of Architects AIA Document 310

Bond Number: 43233-TRA-26-14

Bid Bond

CONTRACTOR:
(Name, legal status and address)
Coastline Construction Corp.
145 East Main Street
Clinton, CT 06413

SURETY:
(Name, legal status and principal place of business)
Travelers Casualty and Surety Company of America
One Tower Square
Hartford, CT 06183-6014
State of Inc: Connecticut

OWNER:
(Name, legal status and address)
City of Waterbury
235 Grand Street
Waterbury, CT 06702

This document has important legal consequences. Consultation with an attorney is encouraged with respect to its completion or modification.

Any singular reference to Contractor, Surety, Owner or other party shall be considered plural where applicable.

BOND AMOUNT: Ten Percent of Amount Bid (10%)

PROJECT:
(Name, location or address, and Project number, if any)
RFP No. 8665 Trumpet Brook Sewer Relocation

The Contractor and Surety are bound to the Owner in the amount set forth above, for the payment of which the Contractor and Surety bind themselves, their heirs, executors, administrators, successors and assigns, jointly and severally, as provided herein. The conditions of this Bond are such that if the Owner accepts the bid of the Contractor within the time specified in the bid documents, or within such time period as may be agreed to by the Owner and Contractor, and the Contractor either (1) enters into a contract with the Owner in accordance with the terms of such bid, and gives such bond or bonds as may be specified in the bidding or Contract Documents, with a surety admitted in the jurisdiction of the Project and otherwise acceptable to the Owner, for the faithful performance of such Contract and for the prompt payment of labor and material furnished in the prosecution thereof; or (2) pays to the Owner the difference, not to exceed the amount of this Bond, between the amount specified in said bid and such larger amount for which the Owner may in good faith contract with another party to perform the work covered by said bid, then this obligation shall be null and void, otherwise to remain in full force and effect. The Surety hereby waives any notice of an agreement between the Owner and Contractor to extend the time in which the Owner may accept the bid. Waiver of notice by the Surety shall not apply to any extension exceeding sixty (60) days in the aggregate beyond the time for acceptance of bids specified in the bid documents, and the Owner and Contractor shall obtain the Surety's consent for an extension beyond sixty (60) days.

If this Bond is issued in connection with a subcontractor's bid to a Contractor, the term Contractor in this Bond shall be deemed to be Subcontractor and the term Owner shall be deemed to be Contractor.

When this Bond has been furnished to comply with a statutory or other legal requirement in the location of the Project, any provision in this Bond conflicting with said statutory or legal requirement shall be deemed deleted herefrom and provisions conforming to such statutory or other legal requirement shall be deemed incorporated herein. When so furnished, the intent is that this Bond shall be construed as a statutory bond and not as a common law bond.

Signed and sealed this 6th day of August , 2026

Amie Hale
(Witness) Amie Hale

Coastline Construction Corp.
(Principal) *(Seal)*

(Title) Robert T. Campanaro Vice President

Michael Tedone
(Witness) Michael Tedone

Travelers Casualty and Surety Company of America
(Surety) *(Seal)*

(Title) Joanne Czlapinski, Attorney-in-Fact

TRAVELERS

Travelers Casualty and Surety Company of America
Travelers Casualty and Surety Company
St. Paul Fire and Marine Insurance Company
Farmington Casualty Company

POWER OF ATTORNEY

Travelers Casualty and Surety Company of America, Travelers Casualty and Surety Company, St. Paul Fire and Marine Insurance Company, and Farmington Casualty Company are corporations duly organized under the laws of the State of Connecticut (herein collectively called the "Companies"), and the Companies do hereby make, constitute and appoint Joanne Czlapinski of Hartford , Connecticut , their true and lawful Attorney(s)-in-Fact to sign, execute, seal and acknowledge any and all bonds, recognizances, conditional undertakings and other writings obligatory in the nature thereof on behalf of the Companies in their business of guaranteeing the fidelity of persons, guaranteeing the performance of contracts and executing or guaranteeing bonds and undertakings required or permitted in any actions or proceedings allowed by law.

IN WITNESS WHEREOF, the Companies have caused this instrument to be signed, and their corporate seals to be hereto affixed, this **13th** day of **May, 2026.**

SEAL SEAL SEAL SEAL

State of Connecticut

By: _____
Bryce Grissom, Senior Vice President

City of Hartford ss.

On this the **13th** day of **May, 2026**, before me personally appeared **Bryce Grissom**, who acknowledged himself to be the Senior Vice President, Surety, Bond & Specialty Insurance, of each of the Companies, and that he, as such, being authorized so to do, executed the foregoing instrument for the purposes therein contained by signing on behalf of said Companies by himself as a duly authorized officer.

IN WITNESS WHEREOF, I hereunto set my hand and official seal.

My Commission expires the **31st** day of **March, 2031**

NOTARY PUBLIC

_____
Marie E. Sorensen, Notary Public

This Power of Attorney is granted under and by the authority of the following resolutions adopted by the Boards of Directors of each of the Companies, which resolutions are now in full force and effect, reading as follows:

RESOLVED, that the Chairman, the President, any Vice Chairman, any Executive Vice President, any Senior Vice President, any Vice President, any Second Vice President, the Treasurer, any Assistant Treasurer, the Corporate Secretary or any Assistant Secretary may appoint Attorneys-in-Fact and Agents to act for and on behalf of the Company and may give such appointee such authority as his or her certificate of authority may prescribe to sign with the Company's name and seal with the Company's seal bonds, recognizances, contracts of indemnity, and other writings obligatory in the nature of a bond, recognizance, or conditional undertaking, and any of said officers or the Board of Directors at any time may remove any such appointee and revoke the power given him or her; and it is

FURTHER RESOLVED, that the Chairman, the President, any Vice Chairman, any Executive Vice President, any Senior Vice President or any Vice President may delegate all or any part of the foregoing authority to one or more officers or employees of this Company, provided that each such delegation is in writing and a copy thereof is filed in the office of the Secretary; and it is

FURTHER RESOLVED, that any bond, recognizance, contract of indemnity, or writing obligatory in the nature of a bond, recognizance, or conditional undertaking shall be valid and binding upon the Company when (a) signed by the President, any Vice Chairman, any Executive Vice President, any Senior Vice President or any Vice President, any Second Vice President, the Treasurer, any Assistant Treasurer, the Corporate Secretary or any Assistant Secretary and duly attested and sealed with the Company's seal by a Secretary or Assistant Secretary; or (b) duly executed (under seal, if required) by one or more Attorneys-in-Fact and Agents pursuant to the power prescribed in his or her certificate or their certificates of authority or by one or more Company officers pursuant to a written delegation of authority; and it is

FURTHER RESOLVED, that the signature of each of the following officers: President, any Executive Vice President, any Senior Vice President, any Vice President, any Assistant Vice President, any Secretary, any Assistant Secretary, and the seal of the Company may be affixed by facsimile to any Power of Attorney or to any certificate relating thereto appointing Resident Vice Presidents, Resident Assistant Secretaries or Attorneys-in-Fact for purposes only of executing and attesting bonds and undertakings and other writings obligatory in the nature thereof, and any such Power of Attorney or certificate bearing such facsimile signature or facsimile seal shall be valid and binding upon the Company and any such power so executed and certified by such facsimile signature and facsimile seal shall be valid and binding on the Company in the future with respect to any bond or understanding to which it is attached.

I, **Kevin E. Hughes**, the undersigned, Assistant Secretary of each of the Companies, do hereby certify that the above and foregoing is a true and correct copy of the Power of Attorney executed by said Companies, which remains in full force and effect.

Dated this 6th day of August , 2026 .

SEAL SEAL SEAL SEAL

_____
Kevin E. Hughes, Assistant Secretary

To verify the authenticity of this Power of Attorney, please call us at 1-800-421-3880.
Please refer to the above-named Attorney(s)-in-Fact and the details of the bond to which this Power of Attorney is attached.

P.O. Box 910
Clinton, Ct 06413
Phone: (860) 669-5058 Fax: (860) 669-7004
www.coastlineconstructioncorp.com

PROPOSER INFORMATION

1a. Coastline Construction Corp
1b. 145 East Main Street, Clinton, Ct 06413, Mailing Address: PO Box 910, Clinton Ct 06413
1c. 07/07/1992
1d. Corporation, State of Connecticut
1e. 34 years
1f. Louis J. Campanaro, Sr, President
Robert T. Campanaro, Vice President
Louis J. Campanaro, Jr, Secretary/Treasurer

2a. Philosophy Statement:
At Coastline Construction Corp., our philosophy is rooted in integrity, accountability, and quality craftsmanship. We believe that every project—regardless of size or complexity—deserves careful planning, skilled execution, and clear communication. Our commitment is to deliver work that not only meets specifications, but exceeds expectations in durability, safety, and long-term value. We take pride in building strong relationships with our clients, subcontractors, and communities by operating with transparency and professionalism at every stage of a project. By combining experience, attention to detail, and a solutions-driven mindset, we strive to complete projects efficiently while maintaining the highest standards of workmanship

Business Focus:
Coastline Construction Corp. specializes in site development and infrastructure construction, with a strong emphasis on public works and municipal projects. Our core services include sitework, excavation, roadway construction, utility installation, and surface restoration.

2b. See Ongoing Projects & Completed Projects attached to our bid (projects highlighted in yellow are sewer related, which includes the requested project information and contact information)

We have had NO contracts or purchase orders within the last three (3) years with the City of Waterbury.

2c. Please see attached list of Personnel including Resumes for Key Personnel.

2d. N/A

3. Statement of Qualifications and Work Plan

a. Qualifications:
Coastline Construction Corp. has more than 35 years of experience performing heavy civil and underground utility construction throughout Connecticut. Since its founding in 1992, the company has successfully installed, repaired, and rehabilitated sanitary sewer systems utilizing both PVC and ductile iron pipe in a variety of municipal and commercial applications. Our experience includes new sewer installations, sewer relocations, utility replacements, manhole installation, service connections, bypass pumping, and restoration. Coastline has the personnel, equipment, and technical expertise necessary to complete complex sanitary sewer projects safely, efficiently, and in accordance with project specifications and industry standards.

COASTLINE CONSTRUCTION CORP.

P.O. Box 910
Clinton, Ct 06413
Phone: (860) 669-5058 Fax: (860) 669-7004
www.coastlineconstructioncorp.com

Coastline Construction has an established record of successfully completing projects for municipalities, public utilities, and public agencies throughout Connecticut. The company has extensive experience working under municipal contract requirements, including projects for the Metropolitan District (MDC) and other municipalities. Our team understands the unique requirements of municipal construction, including maintaining public access, coordinating with utility companies, minimizing disruptions to residents and businesses, complying with prevailing wage requirements, and delivering projects on schedule while maintaining the highest quality standards.

b. Work Plan:
Coastline Construction Corp. understands that the purpose of this project is to permanently relocate approximately 1,400 linear feet of sanitary sewer from its existing alignment adjacent to and crossing Trumpet Brook to a new alignment within the public roadway. Our approach focuses on maintaining public safety, protecting the environment, minimizing impacts to residents, and completing the work efficiently while maintaining continuous sewer service. Prior to construction, Coastline will coordinate with the City of Waterbury, Jacobs Engineering, utility companies, emergency services, and affected residents to establish project schedules, traffic control requirements, and utility coordination. Existing utilities will be verified through utility mark-outs and subsurface investigations where necessary to minimize conflicts during excavation. Construction will proceed in logical phases beginning with erosion and sedimentation controls, traffic control installation, and mobilization. Excavation will be performed using appropriate trench protection systems that comply with OSHA requirements. Dewatering systems will be implemented as required to maintain dry, stable trench conditions while preventing sediment-laden water from entering nearby drainage systems or Trumpet Brook. The proposed sewer will be installed in accordance with the contract documents using approved pipe materials and bedding requirements. Pipe installation will include continuous grade verification using laser controls to ensure proper alignment and flow characteristics. Manholes and appurtenances will be installed concurrently to minimize disruption and expedite completion of each work area.
Connections to the existing sanitary sewer system will be carefully coordinated to minimize service interruptions. Temporary bypass pumping will be utilized whenever required to maintain continuous wastewater service during tie-ins. Bypass operations will be planned with redundancy and monitored continuously throughout critical connection activities.

1. Submittal period and traffic plan
2. Material procurement
3. Survey layout
4. Pavement saw cutting
5. Begin sanitary sewer replacement at existing SMH#11; Bunker Hill Rd
6. Proceed with sanitary sewer replacement to SMH#4 and replace sanitary sewer services as the main line advances
7. Install SMH#4A
8. Abandon existing manholes on Bunker Hill Road as required
9. Replace 18" RCP storm manholes and pipe as required
10. Continue sanitary sewer from SMH#4 to existing SMH#1. Replace sanitary sewer services as the main line advances on Ardsley Road
11. Support existing 15" RCP and 42" RCP on a daily basis
12. The existing 8" clay sewer will be removed in the same trench as the new 10" PVC sewer is installed.

COASTLINE CONSTRUCTION CORP.

P.O. Box 910
Clinton, Ct 06413
Phone: (860) 669-5058 Fax: (860) 669-7004
www.coastlineconstructioncorp.com

13. Core new opening in existing SMH#1 and redirect existing flow into new 10" PVC. Plug existing 8" clay sewer outlet in SMH#1
14. Saw cut roadway
15. Install permanent trench repair
16. Perform mill and overly after settlement period
17. Replace line striping and install pavement markings

c. Services Expected of the City:
Administer the construction contract, review progress, process change orders, and manage overall project coordination. Review submittals, respond to Requests for Information (RFIs), issue clarifications, and interpret the contract documents. Provide periodic or full-time inspection (as specified) to verify that work is performed in accordance with the plans, specifications, and applicable standards. Review and approve monthly payment applications, certified payrolls, prevailing wage documentation, and closeout documents.

4. Cost Schedule:
Coastline Construction Corp.'s proposed pricing for this RFP is as set forth in Lines 1 through 18 of the Proposal Form. The following information is provided in support of our proposal:

1. Complete list of current personnel and job classification
2. All work will be completed within the contract calendar days specified in the RFP. All employees will be compensated at rates that meet or exceed the applicable prevailing wage requirements
3. Operating Engineers are represented by Local 478.
4. Laborers are represented by LiUNA Local 230
5. The mill and overlay work will be performed by a qualified subcontractor (ie; J. Metcalf Paving LLC or A&J Construction)
6. Detailed labor, material, equipment, and subcontractor cost breakdowns will be provided upon the City of Waterbury's request if Coastline Construction Corp. is determined to be the apparent low bidder

5. Answers to Failure to Complete Work, Default and Litigation.
a. No
b. No
c. No
d. No
e. No
f. No
g. No

6. No exceptions or alternatives.

7. No additional data to be provided.

Coastline Construction Corp.- Completed Projects (Past 15 Years)

Start Date	Complete Date	Project / Contract Description	Sub or Prime	Original Contract Amount	Final Contract Amount	Owner's Project No.	Location of Actual Work Performed Town, State	Project Contact Information Full Name, Address and Phone # of Owner	Owner's E-Mail Address
10/9/2010	1/4/2012	EAST BROADWAY INTERCEPTOR REPLACEMENT	P	$3,179,000	$3,699,501	#06-051-65	MILFORD, CT	CITY OF MILFORD, C/O WESTCOTT AND MAPES, 142 TEMPLE STREET, NEW HAVEN, CT 06510, C/O K. MARK DAVIS,P.E., PHONE #203-848-4085	mdavis@westcottandmapes.com
10/31/2011	12/19/2012	INDIAN RIVER INTERCEPTOR REPLACEMENT	P	$3,196,937	$3,196,937	#04-080-10	MILFORD, CT	CITY OF MILFORD, C/O WESTCOTT AND MAPES, 142 TEMPLE STREET, NEW HAVEN, CT 06510, C/O K. MARK DAVIS,P.E., PHONE #203-848-4085	mdavis@westcottandmapes.com
11/1/2011	8/31/2013	FARMINGTON AVENUE SEWER SEPATION PROJECT 7.2	P	$3,137,150	$3,137,150	#2011-24	WEST HARTFORD, CT	MDC, 555 MAIN STREET, HARTFORD, CT 06103 ,C/O ADAM THOMPSON , PHONE #860-278-7850	athompson@themdc.com
6/1/2013	1/12/2015	RETREAT AVENUE COMBINED SEWER AND WATER MAIN IMPROVEMENT PROJECT **	P	$8,497,000	$9,568,452	2011-71A	HARTFORD, CT	MDC, 555 MAIN STREET, HARTFORD, CT 06103 ,C/O JASON WATERBURY, PHONE #860-278-7851 JOHN REGAN, CDM SMITH, 860-278-7851	jwaterbury@themdc.com reganjt@cdmsmith.com
4/27/2015	10/26/2015	RETREAT AVENUE COMBINED SEWER REPLACEMENT PROJECT **	P	$1,727,000	$1,842,382	2014B-48	HARTFORD, CT	MDC, 555 MAIN STREET, HARTFORD, CT 06103 ,C/O JEFF PASSARDI, PHONE #860-278-7852	jpassardi@themdc.com
10/6/2015	4/4/2017	NAUGATUCK AVENUE DRAINAGE IMPROVEMENTS	P	$2,107,729	$3,029,249	83-262	MILFORD, CT	CITY OF MILFORD, 70 WEST RIVER STREET, MILFORD, CT 06460, GREGORY PIDLUSKI Ph#203-783-3261 JOHN SCHMITZ, BL COMPANIES 203-630-1406	gpidluski@ci.milford.ct.us jschmitz@blcompanies.com
5/13/2016	11/8/2016	REPLACEMENT OF BRIDGE NO. 06784 ROUTE 85 OVER CABIN BROOK	P	$997,000	$1,138,159	28-199	COLCHESTER, CT	CT DOT, 171 SALEM TURNPIKE, NORWICH, CT 06360, C/O JOEL DILLIS, PHONE #860-608-8397 JUSTINE ZIOBRON, BL COMPANIES	joel.dillis@ct.gov jziobron@blcompanies.com
4/1/2017	11/25/2017	EAST PUTNAM AVENUE & SHERWOOD PLACE DRAINAGE SYSTEM IMPROVEMENTS **	P	$2,881,000	$2,811,687	09-017	GREENWICH, CT	TOWN OF GREENWICH, 101 FIELD POINT ROAD, GREENWICH, CT 06830, C/O GABRIELLA CIRCOSTA-COHEE, PHONE #203-861-3151	gcohee@greenwichct.org
5/1/2017	2/5/2020	OLD GREENWICH COMMON FORCE MAIN REPLACEMENT SEGMENTS 9B, 10 & 11 **	P	$3,727,000	$5,571,154	16-6049	GREENWICH, CT	TOWN OF GREENWICH, 101 FIELD POINT ROAD , GREENWICH, CT 06830, C/O RICHARD FEMINELLA, P.E. , PHONE #203-662-7831	rfeminella@greenwichct.org
1/19/2019	10/28/2020	TYLERVILLE WATER MAIN EXTENSION PROJECT **	P	$6,127,000	$6,326,987	NA	HADDAM, CT	TOWN OF HADDAM, 30 FIELD PARK DRIVE, HADDAM, CT, 006438, C/O ROBERT COLANTONIO, PHONE #203-867-6427 ROBERT TEDESHI 860-513-1473 DAVE PEELING, 860-664-6007	colantor@wseinc.com tedeschir@wsinc.com dpeeling@ctwater.com
1/31/2020	12/26/2020	GLENWOOD ROAD WATER MAIN INSTALLATION	P	$1,829,800	$2,271,999	NA	CLINTON, CT	CT WATER, 93 WEST MAIN STREETt, CLINTON, CT 06413, C/O ADAM COST, PHONE #860-664-6156	adam.cost@ctwater.com
6/1/2020	7/21/2022	SAYBROOKE & BONNER STREET AREA WATER MAIN REPLACEMENT	P	$4,127,000	$4,544,159	2018B-17	HARTFORD, CT	MDC, 555 MAIN STREET, HARTFORD, CT 06103 ,C/O THOMAS ROBBINS, PHONE #860-278-7850	trobbins@themdc.com
9/13/2021	11/10/2022	NEW PARK AVENUE WATER MAIN REPLACEMENT	P	$1,727,000	$2,094,262	2021B-08	WEST HARTFORD, CT	MDC, 555 MAIN STREET, HARTFORD, CT 06103 ,C/O THOMAS ROBBINS, PHONE #860-278-7850	trobbins@themdc.com

9/7/2023	5/30/2024	OAK RIDGE DRIVE WATER MAIN REPLACEMENT & EAST STREET INTERCONNECTION PROJECT	P	$762,000	$732,602	2023-005	MIDDLETOWN, CT	CITY OF MIDDLETOWN, 245 DEKOVEN DRIVE, MIDDLETOWN, CT 06457, BRIAN ROBILLARD PHONE #860-344-3465	brian.robillard@middletownct.gov
6/7/2022	7/31/2025	PAVING & SURFACE RESTORATION	P	$7,927,000	$7,598,686	2021B-18	MDC MEMBER TOWNS, CT	MDC, 555 MAIN STREET, HARTFORD, CT 06103 DINSEH PATEL PHONE #860-513-3478	dpatel@themdc.com
	9/27/2024	2022B-31 - CFQ#3	P		$4,996,958	2022B-31	MDC MEMBER TOWNS, CT	MDC, 555 MAIN STREET, HARTFORD, CT 06103 ,C/O JEFF PASSARDI, PHONE #860-278-7850	jpassardi@themdc.com
	8/7/2025	2022B-31 - CFQ#9 TOWER AVENUE AREA	P		$6,419,270	2022B-31	HARTFORD, CT	MDC, 555 MAIN STREET, HARTFORD, CT 06103 JEFF PASSARDI, PHONE #860-278-7850	jpassardi@themdc.com
	5/3/2024	2022B-31 - CFQ#12 WOODSTOCK ST & BRANFORD ST	P		$1,568,108	2022B-31	HARTFORD, Ct	MDC, 555 MAIN STREET, HARTFORD, CT 06103 JEFF PASSARDI, PHONE #860-278-7850	jpassardi@themdc.com

Coastline Construction Corp. - Ongoing Projects

Start Date	Complete Date	Project / Contract Description	Sub or Prime	Original Contract Amount		Owner's Project No.	Location of Actual Work Performed Town, State	Project Contact Information Full Name, Address and Phone # of Owner	Description of Work	Completion Status
1/1/2023	12/31/2025	SEWER REPAIR & RELATED CONSTRUCTION SERVICES (3 YEAR CONTRACT)	P			2022B-31	MDC MEMBER TOWNS, CT	MDC, 555 MAIN STREET, HARTFORD, CT 06103 JEFF PASSARDI PHONE #860-278-7850 jpassardi@themdc.com	Project Awarded to 3 Bidders - then individual CFQ projects go to the lowest bidder of the 3 (we have been awarded CFQ#3, CFQ#9, CFQ#12, CFQ#13, within the three year contract)	
	9/28/2026	2022B-31 CFQ#13 WESTLAND ST & GARDEN ST SEWER SEPARATION & SEWER REHABILITATION	p	$17,986,028		2022B-31 CFQ#13	HARTFORD, CT	MDC, 555 MAIN STREET, HARTFORD, CT 06103 MIKE TRICK - PHONE #860-278-7850 EXT.3739 mtrick@themdc.com	Installation of 2,010 LF of 12" DI water main, installation of 1,700 of 12" restrained joint DI water main, install 20 LF of 10" restrained joint DI water main, install 350 LF of 8" restrained joint DI water main, install 20 LF of 6" DI water main, install 1,400 LF of water services smaller than 4", (90) water meter pits, (90) curb stops, (15) 12" gate valves, (15) 8" gate valves, (11) hydrant assemblies, (13) chlorination inlets, (7) 4" blowoff assemblies, turf restoration, temporary trench restoration and permanent trench restoration	93%
Approx. 9/3/2025	Approx. Completion 8/30/2028	PAVING & SURFACE RESTORATION	P	$6,727,000		2025B-33	MDC MEMBER TOWNS, CT	MDC, 555 MAIN STREET, HARTFORD, CT 06103 ,C/O DINSEH PATEL, PHONE #860-513-3478 dpatel@themdc.com	Work consists of all labor, equipment and associated costs necessary to provide for excavation, saw cutting jack hammering of bituminous and concrete material, raising manholes and water gate boxes, setting or resetting of curbing, placing bituminous asphalt, placing concrete and reinforcing steel, joint sealing and installing expansion joints, grass restoration	26%
6/2/2026	6/1/2029 approx.	SEWER REPAIR & RELATED CONSTRUCTION SERVICES (3 YEAR CONTRACT)	P	$16,370,000		2025B-40	MDC MEMBER TOWNS, CT	MDC, 555 MAIN STREET, HARTFORD, CT 06103 JEFF PASSARDI PHONE #860-278-7850 jpassardi@themdc.com	Project Awarded to 3 Bidders - then individual CFQ projects are bid by the 3 awarded contractors - we currently have not been awarded a CFQ	0%
6/10/2026	3/14/2027 approx.	WATER MAIN INTERCONNECTION	P	$927,000		N/A	BERLIN, CT	TOWN OF BERLIN, WATER CONTROL COMMISSION, 240 KENSINGTON RD, BERLIN, CT 06037	installation of 2300 LF of 12" DI water main and a pressure reducing/meter vault	2%

Robert T. Campanaro, P.E. , L.S.
Vice President, Superintendent

In 1978, Bob earned a Bachelor of Science Degree in Civil Engineering from the University of Connecticut. His emphasis of study was placed in Soil Mechanics, Environmental Engineering and Structural Design. He gained substantial background in biology, limnology and organic chemistry. During the course of this degree, he had special opportunity of independent study to analyze the structural stability of two earth dams in Connecticut with his Professor. In 1979, Bob earned a Master of Science Degree in Civil Engineering, also from the University of Connecticut, with the emphasis of study being in Soil Mechanics, Sanitary and Environmental Engineering.

During the summers of his education, Bob worked with various organizations. In the summers of 1973-1975, he worked as a heavy equipment operator for Campanaro Construction Company. In the summers of 1976-1978 he worked for Radcliffe Engineering P.C., a Consulting Civil Engineering and Land Surveying firm. Bob worked in the field covering all aspects of surveying and construction layouts and performed various surveying, structural and soils design calculations. In the summer of 1979, he worked with Scalzo-Mangino-Yannone & Associates, a Consulting Engineering, Architectural and Surveying firm, where he was given the opportunity to work on all aspects of Civil Engineering projects as well as presenting said projects at public and private meetings.

In 1980, Bob began his employment at Campanaro Construction Company as a construction cost estimator and bidder, as well as preparing developmental plans and coastal site plans which he would then present to local regulatory agencies. His experience furthered to direct contract supervision and administration of projects such as sewer and water mains, pumping stations built in place and pre-engineered precast stations. He has also supervised and administrated projects dealing with sheeting, reinforced concrete, steel sheeted cofferdams, pipejacking, blasting and dewatering, as well as river crossings with inverted siphons or gravity flow, flood control projects and total roadway reconstruction. At this time Bob is the Vice President of Coastline Construction Corp. and holds a Connecticut Professional Engineer and Land Surveyors License No. 13655.

Bob has acted as project manager, Superintendent and health and safety officer on several projects with contaminated soil and or ground water including the completed DOT 163-182 Windham, CT, DOT 58-285 Groton, CT, DOT 173-288/289 Bridgeport, CT, DOT 02-123/124 Ansonia, CT, MDC 2003-45A Edgewood Street, 2011-24 Farmington Avenue 7.2, 2011-71A Retreat Avenue and 2014B-48 Retreat Avenue.

Bob has worked on and supervised projects such as deep sewer and utility installation, live sanitary sewer replacement with sanitary sewer bypass pump systems, CIPP lining projects, total road reconstruction, river crossings, sheeting, reinforced concrete, steel sheeted cofferdams, dewatering, blasting, pump stations and HDPE fused sanitary forced main pipe projects. Bob has 46 years of experience in construction and has been in a supervisory capacity for 43 years.

Construction License' s:
Plumbing & Piping Limited Contractor #PLM.0285614-P7
Professional Engineer & Land Surveyor #PEL.0013655
Subsurface Sewage Installer #006115
OSHA 10 Certified, OSHA Competent Person

HAZWOPER Trained
Confined Space Supervisor
First Aid and CPR trained

Louis J. Campanaro, Jr.
Secretary / Treasurer / Superintendent

Lou, Jr. attended the Morgan High School in Clinton, Connecticut. During summer vacations and on many weekends, he worked for Campanaro Construction Company.

Lou, Jr. learned the construction industry from the bottom, up. He worked his way up starting as a laborer, then a service mechanic, heavy equipment operator and in June 1990 he completed a Connecticut certified apprentice program for heavy equipment operators. In 1998 Louis moved into management as a project foreman and superintendent depending upon the project.

Lou, Jr. has worked on and supervised projects such as deep sewer and utility installation, live sanitary sewer replacement with sanitary sewer bypass pump systems, CIPP lining projects, total road reconstruction, river crossings, sheeting, reinforced concrete, steel sheeted cofferdams, dewatering, blasting, pump stations and HDPE fused sanitary forced main pipe projects.

Physically installed many thousands of feet of conduit in varying sizes for CL&P, Frontier, North East Utilities, United Illuminating and Verizon.

Lou, Jr. has been working in the construction industry for 38 years and 26 years in a Supervisory capacity.

Construction License's:
OSHA 10 Certified
OSHA Competent Person
Confined Space Trained
First Aid and CPR Certified

Michael J. Cote
General Manager / Project Manager

Michael graduated from the Old Saybrook Senior High School in Old Saybrook, Connecticut in June of 2000. He is in the process of obtaining an Associates Degree at the Gateway Community College with special interest in Computer Science, Engineering and Computer Estimating.

Michael has been employed by Coastline Construction Corp. since April, 2004. He has been onsite full time on such projects as large diameter live sanitary sewer replacement, water main installation, total road reconstruction, in water cofferdam construction, sheeting, reinforced concrete, dewatering and blasting.

Michael is presently a General Manager, Project Manager and Estimator for Coastline Construction Corp.

Michael has been working in the construction industry for 22 years and has been in a supervisory capacity for 12 years.

Construction License's:
OSHA 10 Certified
OSHA Competent Person
HAZWOPER Trained
Confined Space Supervisor
AHA First Aid / CPR / AED Certified

Nicholas Campanaro
Superintendent / Foreman

Nicholas graduated from The Morgan School in Clinton, Connecticut in June of 2010. He then attended the University of Hartford studying the Civil Engineering Program from 2010-2011. Nicholas then attended the Central Connecticut State University Construction Management Program from 2011-2014.

Nicholas has been employed by Coastline Construction Corp. since June, 2010. He has been onsite on such projects as large diameter live sanitary sewer replacement, water main installation, total road reconstruction, in water cofferdam construction, sheeting, reinforced concrete, dewatering and blasting. Telecommunications installation such as the Verizon 5G network.

Nicholas is presently a Superintendent for Coastline Construction Corp.

Nicholas has been working in the construction industry for 16 years and has been in a supervisory capacity for 7 years. Nicholas also has a Class A Commercial Driver's License.

Construction License's:
OSHA 10 Certified
OSHA Competent Person
P6 Plumbing & Piping Limited Journeyperson PLM.0289640-P6
AHA First Aid / CPR / AED Certified

Mackenzie Campanaro
Safety Compliance Officer / Asst. Project Manager

Mackenzie graduated from The Morgan School in Clinton, Connecticut in 2017.

Mackenzie has been employed by Coastline Construction Corp. since February 2024. She has been onsite on such projects as water main installation and water services and sanitary sewer installation as well as paving restoration and concrete sidewalks

Mackenzie is presently the Safety Compliance Officer and Assistant Project Manager

Mackenzie has been working in the construction industry for 2 years.

Construction Licenses:
OSHA 10 Certified
Construction Confined Space Competent Person Trained
Excavation Competent Person Trained
AHA First Aid / CPR / AED Certified

List of Employees w/ Classifications	
Employee	**Classification**
Amie Hale	Administrative Assistant
Andrew Rodrigues	Foreman / Laborer
Benjamin Bouchard	Equipment Operator / CDL Driver
Brian M Law	Equipment Operator
Brian R. Schenck	Foreman / Equipment Operator
Collin Burgher	CDL Driver
David Ruffin	Laborer
Dennis Forbes	CDL Driver
George Christie	Mechanic/Equipment Operator / CDL Driver
Jeffrey Hayes	Equipment Operator / CDL Driver
Jose Montes-Martinez	Laborer
Jose Romero Gualan	Equipment Operator
Joseph P. Lee	Laborer / CDL Driver
Louis J. Campanaro III	Equipment Operator
Louis J. Campanaro Jr.	Secretary/Treasurer
Louis J. Campanaro Sr.	President
Mackenzie Campanaro	Safety Officer
Michael Cote	General Manager
Nelson Duarte	Laborer
Nicholas Campanaro	Superintendent/Foreman/Equipment Operator
Randall Philbrick	Opertor
Rebecca Howard	Office Manager
Robert T Campanaro	Vice President
Samuel A. Schenck	Laborer

CERTIFICATE OF LIABILITY INSURANCE

DATE (MM/DD/YYYY): 10/7/2026

THIS CERTIFICATE IS ISSUED AS A MATTER OF INFORMATION ONLY AND CONFERS NO RIGHTS UPON THE CERTIFICATE HOLDER. THIS CERTIFICATE DOES NOT AFFIRMATIVELY OR NEGATIVELY AMEND, EXTEND OR ALTER THE COVERAGE AFFORDED BY THE POLICIES BELOW. THIS CERTIFICATE OF INSURANCE DOES NOT CONSTITUTE A CONTRACT BETWEEN THE ISSUING INSURER(S), AUTHORIZED REPRESENTATIVE OR PRODUCER, AND THE CERTIFICATE HOLDER.

IMPORTANT: If the certificate holder is an ADDITIONAL INSURED, the policy(ies) must have ADDITIONAL INSURED provisions or be endorsed. If SUBROGATION IS WAIVED, subject to the terms and conditions of the policy, certain policies may require an endorsement. A statement on this certificate does not confer rights to the certificate holder in lieu of such endorsement(s).

PRODUCER
IMA, Inc. – Connecticut
35 Thorpe Avenue
Wallingford CT 06492

CONTACT NAME: Mary Slater
PHONE (A/C, No, Ext): | **FAX (A/C, No):**
E-MAIL ADDRESS: mary.slater@imacorp.com

INSURER(S) AFFORDING COVERAGE	NAIC #
INSURER A : Selective Insurance Company of America	12572
INSURER B :	
INSURER C :	
INSURER D :	
INSURER E :	
INSURER F :	

INSURED COASCON-05
Coastline Construction Corp.
145 East Main Street
P.O. Box 910
Clinton CT 06413

COVERAGES **CERTIFICATE NUMBER:** 2069485673 **REVISION NUMBER:**

THIS IS TO CERTIFY THAT THE POLICIES OF INSURANCE LISTED BELOW HAVE BEEN ISSUED TO THE INSURED NAMED ABOVE FOR THE POLICY PERIOD INDICATED. NOTWITHSTANDING ANY REQUIREMENT, TERM OR CONDITION OF ANY CONTRACT OR OTHER DOCUMENT WITH RESPECT TO WHICH THIS CERTIFICATE MAY BE ISSUED OR MAY PERTAIN, THE INSURANCE AFFORDED BY THE POLICIES DESCRIBED HEREIN IS SUBJECT TO ALL THE TERMS, EXCLUSIONS AND CONDITIONS OF SUCH POLICIES. LIMITS SHOWN MAY HAVE BEEN REDUCED BY PAID CLAIMS.

INSR LTR	TYPE OF INSURANCE	ADDL INSD	SUBR WVD	POLICY NUMBER	POLICY EFF (MM/DD/YYYY)	POLICY EXP (MM/DD/YYYY)	LIMITS	
A	X **COMMERCIAL GENERAL LIABILITY** [ ] CLAIMS-MADE [X] OCCUR GEN'L AGGREGATE LIMIT APPLIES PER: [ ] POLICY [X] PRO-JECT [ ] LOC [ ] OTHER:	Y	Y	S 2572416	11/9/2025	11/9/2026	EACH OCCURRENCE DAMAGE TO RENTED PREMISES (Ea occurrence) MED EXP (Any one person) PERSONAL & ADV INJURY GENERAL AGGREGATE PRODUCTS - COMP/OP AGG	$ 1,000,000 $ 500,000 $ 15,000 $ 1,000,000 $ 2,000,000 $ 2,000,000
A	**AUTOMOBILE LIABILITY** X ANY AUTO [ ] OWNED AUTOS ONLY [ ] SCHEDULED AUTOS X HIRED AUTOS ONLY X NON-OWNED AUTOS ONLY	Y	Y	S 2572416	11/9/2025	11/9/2026	COMBINED SINGLE LIMIT (Ea accident) BODILY INJURY (Per person) BODILY INJURY (Per accident) PROPERTY DAMAGE (Per accident)	$ 1,000,000 $ $ $
A	X **UMBRELLA LIAB** X OCCUR **EXCESS LIAB** [ ] CLAIMS-MADE [ ] DED X RETENTION $ 0	Y	Y	S 2572416	11/9/2025	11/9/2026	EACH OCCURRENCE AGGREGATE	$ 5,000,000 $ 5,000,000
A	**WORKERS COMPENSATION AND EMPLOYERS' LIABILITY** Y / N ANYPROPRIETOR/PARTNER/EXECUTIVE OFFICER/MEMBER EXCLUDED? [ ] **(Mandatory in NH)** If yes, describe under DESCRIPTION OF OPERATIONS below	N / A	Y	WC 9099452	11/9/2025	11/9/2026	X PER STATUTE [ ] OTH-ER E.L. EACH ACCIDENT E.L. DISEASE - EA EMPLOYEE E.L. DISEASE - POLICY LIMIT	 $ 1,000,000 $ 1,000,000 $ 1,000,000

DESCRIPTION OF OPERATIONS / LOCATIONS / VEHICLES (ACORD 101, Additional Remarks Schedule, may be attached if more space is required)
Project: RFP No. 8665 Trumpet Brook Sewer Relocation, Waterbury, Ct

The City Waterbury and CH2M HILL ENGINEERS Inc., a subsidiary of Jacobs Engineering Group is listed as an Additional Insured on a primary and non-contributory basis on all policies except Workers Compensation. if required by written contract or agreement, subject to the policy terms and conditions. A Waiver of Subrogation is provided in favor of the Certificate Holder and all other parties required by the contract on the Policies, if required by written contract or agreement, subject to the policy terms and conditions.

CERTIFICATE HOLDER

City of Waterbury
235 Grand Street
Waterbury CT 06702

CANCELLATION

SHOULD ANY OF THE ABOVE DESCRIBED POLICIES BE CANCELLED BEFORE THE EXPIRATION DATE THEREOF, NOTICE WILL BE DELIVERED IN ACCORDANCE WITH THE POLICY PROVISIONS.

AUTHORIZED REPRESENTATIVE
Brenda Vinsant

© 1988-2015 ACORD CORPORATION. All rights reserved.

SPECIFICATIONS

SECTION 01 11 00
SUMMARY OF WORK

PART 1 GENERAL

1.01 LOCATION OF WORK

A. The Work will be accomplished within the Bunker Hill neighborhood in the City of Waterbury, CT as indicated in the Drawings.

B. Project Address: Ardsley Road between Trumpet Brook Road and Bunker Hill Avenue, Bunker Hill Avenue between Ardsley Road and Oakville Avenue; Waterbury, CT 06706.

1.02 WORK COVERED BY THE CONTRACT DOCUMENTS

A. The Work to be done under this Contract and in accordance with these Specifications consists of furnishing all equipment, superintendence, labor, skill, material and all other items necessary for the installation of new sanitary sewer system components and connection to the existing sanitary sewer system within the project limits as shown in the Contract Plans.

B. The required construction work includes, but is not limited to, the major tasks listed below. The listing of major tasks in this section is not intended to address the necessary construction sequencing of the individual tasks, which must be carefully coordinated to allow continuous and effective operation of the existing sanitary sewer system throughout the construction period.

C. The work of the project is defined by the Contract Documents and includes but is not limited to the following:

1. Installation of approximately 225 linear feet of 10-inch diameter ductile iron sanitary sewer main, 180 linear feet of 10-inch diameter PVC sanitary sewer main, 645 linear feet of 15-inch diameter PVC sanitary sewer main and nine new sanitary sewer manholes as indicated on the Contract Drawings.
2. Connection of new sanitary sewer main to existing manholes at each end of the project limits as indicated on the Contract Drawings.
3. Reconnection of sewer laterals for properties within the project limits as indicated on the Contract Drawings.
4. Replacement of approximately 300 linear feet of 18-inch diameter RCP storm drain and two storm manholes as indicated in the Contract Drawings
5. Restoration of the project area as indicated in the Contract Documents

D. Maintenance of Operation: Refer to Section 01 50 00, Temporary Facilities and Controls.

©COPYRIGHT 2026 JACOBS

E. Existing Work:

1. Remove or alter existing work in such a manner as to prevent injury or damage to any portion of the existing work which remains.
2. Repair or replace portions of existing work which have been altered during construction operations to match existing or adjoining work, as approved by the Engineer. At the completion of operations, existing work must be in a condition equal to or better than that which existed before new work started.

1.03 IMPLIED AND NORMALLY REQUIRED WORK

A. It is the intent of these Contract Documents to provide the Owner with complete operable facilities/systems, subsystems and other items of work.

B. Any part or item of Work which is reasonably implied or normally required to make each installation satisfactorily and completely operable is deemed to be included in the Work and the Contract Amount.

C. All miscellaneous appurtenances and other items of Work incidental to meeting the intent of these Specifications shall be included in the Work and the Contract Amount even though these appurtenances may not be specifically called for in these Contract Documents.

1.04 LOCATION OF EXITING UNDERGROUND UTILITIES

A. Obtain excavation permits prior to start of excavation and comply with all applicable requirements for locating and marking underground utilities. Contact local utility locating service prior to excavating, to mark utilities. (Call Before You Dig service of CT) verify existing utility locations indicated on contract drawings within area of work.

B. Identify and mark all other utilities not managed and located by the local utility companies.

C. Scan the construction site with Ground Penetrating Radar (GPR), electromagnetic, or sonic equipment, and mark the surface of the ground or paved surface where existing underground utilities are discovered. Verify the elevations of existing piping, utilities, and any type of underground or encased obstruction not indicated, or specified to be removed, that is indicated or discovered during scanning, in locations to be traversed by piping, ducts, and other work to be conducted or installed.

©COPYRIGHT 2026 JACOBS

1.05 SURVEYS AND LAYOUT

A. All Work under this Contract shall be constructed in accordance with the lines and grades shown on the Drawings or as directed by the Engineer. Elevation of existing ground and appurtenances are believed to be reasonably correct but are not guaranteed to be absolute and therefore are presented only as an approximation. Any error or apparent discrepancy in the data shown or omissions of data required for accurately accomplishing the stake out survey shall be referred immediately to the Engineer for interpretation or correction.

B. All survey work for construction control purposes shall be made by the Contractor at his expense. The Contractor shall provide a Licensed Surveyor as Chief of Party, competently qualified men, all necessary instruments, stakes, and other material to perform the work as necessary.

C. Contractor shall establish all baselines for the location of the principal component parts of the work together with a suitable number of benchmarks and batter boards adjacent to the work. Based upon the information provided by the Contract Drawings, the Contractor shall develop and make all detail surveys necessary for construction, including slope stakes, batter boards, stakes for all working points, lines and elevations.

D. Contractor shall have the responsibility to carefully preserve the benchmarks, reference points and stakes, and in the case of destruction thereof by the Contractor or resulting from his negligence, the Contractor shall be charged with the expense and damage resulting therefrom and shall be responsible for any mistakes that may be caused by the unnecessary loss or disturbance of such bench marks, reference points and stakes.

E. Existing or new control points, property markers and monuments that will be or are destroyed during the normal causes of construction shall be reestablished by the Contractor and all reference ties recorded therefore shall be furnished to the Engineer. All computations necessary to establish the exact position of the work shall be made and preserved by the Contractor.

F. The Engineer may check all or any portion of the Work and the Contractor shall afford all necessary assistance to the Engineer in carrying out such checks. Any necessary corrections to the work shall be immediately made by the Contractor. Such checking by the Engineer shall not relieve the Contractor of any responsibilities for the accuracy or completeness of his work.

G. At completion of the work, the Contractor shall furnish Record Drawings indicating the final layout of all structures, roads, all structures, existing benchmarks, etc. The Record Drawings shall indicate all critical elevations of piping, structures, finish grades, etc.

©COPYRIGHT 2026 JACOBS

1.06 SUBSURFACE DATA

A. Subsurface data are offered in good faith solely for placing the Bidder in receipt of all information available to the Owner and Engineer and in no event is to be considered as part of the Contract Documents. In making this data available, the Owner makes no guarantee, either expressed or implied, as to their accuracy or to the accuracy of any interpretation thereof.

B. The Bidder must interpret such subsurface data according to his own judgment and acknowledge that he is not relying upon the same as accurately describing the subsurface conditions, which may be found to exist.

C. The Bidder further acknowledges that he assumes all risks contingent upon the nature of the sub-surface conditions to be actually encountered in performing the work covered by the Contract, even though such actual conditions may result in the Bidder performing more or less work than he originally anticipated.

1.07 CONTRACTOR'S USE OF SITE

A. The Contractor shall confine construction operations within the Contract limits shown on the Drawings and/or property lines and/or fence lines. Storage of equipment and materials, or erection and use of sheds outside of the Contract limits, if such areas are the property of the Owner, shall be used only with the Jacobs approval.

B. Coordinate use of premises under direction of Engineer/Owner with property owners.

C. Do not block access roads.

D. Provide site safety and security for Project Site.

E. Obtain and pay for use of additional storage or work areas required, if necessary.

PART 2 PRODUCTS (NOT USED)

PART 3 EXECUTION (NOT USED)

END OF SECTION

©COPYRIGHT 2026 JACOBS

SECTION 01 26 00
CONTRACT MODIFICATION PROCEDURES

PART 1 GENERAL

1.01 PROPOSAL REQUESTS

A. Owner may, in anticipation of ordering an addition, deletion, or revision to the Work, request Contractor to prepare a detailed proposal of cost and times to perform contemplated change.

B. Proposal request will include reference number for tracking purposes and detailed description of and reason for proposed change, and such additional information as appropriate and as may be required for Contractor to accurately estimate cost and time impact on Project.

C. Proposal request is for information only; Contractor is neither authorized to execute proposed change nor to stop Work in progress as result of such request.

D. Contractor's written proposal shall be transmitted to Engineer promptly, but not later than 14 days after Contractor's receipt of Owner's written request. Proposal shall remain firm for a maximum period of 45 days after receipt by Engineer.

E. Owner's request for proposal or Contractor's failure to submit such proposal within the required time period will not justify a Claim for an adjustment in Contract Price or Contract Times (or Milestones).

1.02 CLAIMS

A. Include, at a minimum:

1. Specific references including (i) Drawing numbers, (ii) Specification section and article/paragraph number, and (iii) Submittal type, Submittal number, date reviewed, Engineer's comment, as applicable, with appropriate attachments.
2. Stipulated facts and pertinent documents, including photographs and statements.
3. Interpretations relied upon.
4. Description of (i) nature and extent of Claim, (ii) who or what caused the situation, (iii) impact to the Work and work of others, and (iv) discussion of claimant's justification for requesting a change to price or times or both.

©COPYRIGHT 2025 JACOBS

5. Estimated adjustment in price claimant believes it is entitled to with full documentation and justification.
6. Requested Change in Contract Times: Include at least (i) Progress Schedule documentation showing logic diagram for request, (ii) documentation that float times available for Work have been used, and (iii) revised activity logic with durations including sub-network logic revisions, duration changes, and other interrelated schedule impacts, as appropriate.
7. Documentation as may be necessary as set forth below for Work Change Directive, and as Engineer may otherwise require.

1.03 WORK CHANGE DIRECTIVES

A. Procedures:

1. Engineer will:
   a. Initiate, including a description of the Work involved and any attachments.
   b. Affix signature, demonstrating Engineer's recommendation.
   c. Transmit five copies to Owner for authorization.
2. Owner will:
   a. Affix signature, demonstrating approval of the changes involved.
   b. Return four copies to Engineer, who will retain one copy, send one copy to the Resident Project Representative or other field representative, and forward two copies to Contractor.
3. Upon completion of Work covered by the Work Change Directive or when final Contract Times and Contract Price are determined, Contractor shall submit documentation for inclusion in a Change Order.
4. Contractor's documentation shall include but not be limited to:
   a. Appropriately detailed records of Work performed to enable determination of value of the Work.
   b. Full information required to substantiate resulting change in Contract Times and Contract Price for Work. On request of Engineer, provide additional data necessary to support documentation.
   c. Support data for Work performed on a unit price or Cost of the Work basis with additional information such as:
      1) Dates Work was performed, and by whom.
      2) Time records, wage rates paid, and equipment rental rates.
      3) Invoices and receipts for materials, equipment, and subcontracts, all similarly documented.

B. Effective Date of Work Change Directive: Date of signature by Owner, unless otherwise indicated thereon.

©COPYRIGHT 2025 JACOBS

1.04 CHANGE ORDERS

A. Procedure:

1. Engineer will prepare six copies of proposed Change Order and transmit such with Engineer's written recommendation and request to Contractor for signature.
2. Contractor shall, upon receipt, either: (i) promptly sign copies, retaining one for its file, and return remaining five copies to Engineer for Owner's signature, or (ii) return unsigned five copies with written justification for not executing Change Order.
3. Engineer will, upon receipt of Contractor signed copies, promptly forward Engineer's written recommendation and partially executed five copies for Owner's signature, or if Contractor fails to execute the Change Order, Engineer will promptly so notify Owner and transmit Contractor's justification to Owner.
4. Upon receipt of Contractor-executed Change Order, Owner will promptly either:
    a. Execute Change Order, retaining one copy for its file and returning four copies to Engineer; or
    b. Return to Engineer unsigned copies with written justification for not executing Change Order.
5. Upon receipt of Owner-executed Change Order, Engineer will transmit two copies to Contractor, one copy to Resident Project Representative or other field representative, and retain one copy, or if Owner fails to execute the Change Order, Engineer will promptly so notify Contractor and transmit Owner's justification to Contractor.
6. Upon receipt of Owner-executed Change Order, Contractor shall:
    a. Perform Work covered by Change Order.
    b. Revise Schedule of Values to adjust Contract Price and submit with next Application for Payment.
    c. Revise Progress Schedule to reflect changes in Contract Times, if any, and to adjust times for other items of Work affected by change.
    d. Enter changes in Project record documents after completion of change related Work.

B. In signing a Change Order, Owner and Contractor acknowledge and agree that:

1. Stipulated compensation (Contract Price or Contract Times, or both) set forth includes payment for (i) the Cost of the Work covered by the Change Order, (ii) Contractor's fee for overhead and profit (15% on labor and material costs and 5% on costs incurred by a subcontractor), (iii) interruption of Progress Schedule, (iv) delay and impact, including

©COPYRIGHT 2025 JACOBS

cumulative impact, on other Work under the Contract Documents, and (v) extended overheads.

2. Change Order constitutes full mutual accord and satisfaction for the change to the Work.
3. Unless otherwise stated in the Change Order, all requirements of the original Contract Documents apply to the Work covered by the Change Order.

1.05 COST OF THE WORK

A. In determining the supplemental costs allowed in Paragraph 13.01.B.5 of the General Conditions for rental equipment and machinery, the following will apply.

B. Rental of construction equipment and machinery and the parts thereof having a replacement value in excess of $1,000, whether owned by Contractor or rented or leased from others, shall meet the following requirements:

1. Full rental costs for leased equipment shall not exceed rates listed in the Rental Rate Blue Book published by Equipment Watch, as adjusted to the regional area of the Project. Owned equipment costs shall not exceed the single shift rates established in the Cost Reference Guide (CRG) published by Equipment Watch. The most recent published edition in effect at commencement of actual equipment use shall be used.
2. Rates shall apply to equipment in good working condition. Equipment not in good condition, or larger than required, may be rejected by Engineer or accepted at reduced rates.
3. Leased Equipment: For equipment leased or rented in arm’s length transactions from outside vendors, maximum rates shall be determined by the following actual usage/Payment Category:
   a. Less than 8 hours: Hourly rate.
   b. 8 or more hours but less than 7 days: Daily rate.
   c. 7 or more days but less than 30 days: Weekly rate.
   d. 30 days or more: Monthly rate.
4. Arm’s length rental and lease transactions are those in which the firm involved in the rental or lease of equipment is not associated with, owned by, have common management, directorship, facilities and/or stockholders with the firm renting the equipment.
5. Financial arrangements associated with rental and lease transactions that provide Contractor remuneration or discounts not visible to the Owner must be disclosed and integrated with charged rates.

©COPYRIGHT 2025 JACOBS

6. Leased Equipment in Use: Actual equipment use time documented by Engineer shall be the basis that equipment was on and utilized at the Project Site. In addition to the leasing rate above, equipment operational costs shall be paid at the estimated hourly operating cost rate set forth in the Rental Rate Blue Book if not already included in the lease rate. Hours of operation shall be based upon actual equipment usage to the nearest quarter hour, as recorded by Engineer.
7. Leased Equipment, When Idle (Standby): Idle or standby equipment is equipment onsite or in transit to and from the Work Site and necessary to perform the Work under the modification, but not in actual use. Idle equipment time, as documented by Engineer, shall be paid at the leasing rate determined above, excluding operational costs.
8. Owned and Other Equipment in Use: Equipment rates for owned equipment or equipment provided in other than arm's length transaction shall not exceed the single shift total hourly costs rate developed in accordance with the CRG and as modified herein for multiple shifts. This total hourly rate will be paid for each hour the equipment actually performs work. Hours of operation shall be based upon actual equipment usage as recorded by Engineer. This rate shall represent payment in full for Contractor's direct costs.
9. Owned and Other Equipment, When Idle (Standby): Equipment necessary to be onsite to perform the Work on single shift operations, but not utilized, shall be paid for at the ownership hourly expense rate developed in accordance with the CRG, provided its presence and necessity onsite has been documented by Engineer. Payment for idle time of portions of a normal workday, in conjunction with original contract Work, will not be allowed. In no event shall idle time claimed in a day for a particular piece of equipment exceed the normal Work or shift schedule established for the Project. It is agreed that this rate shall represent payment in full for Contractor's direct costs. When Engineer determines that the equipment is not needed to continuously remain at the Work Site, payment will be limited to actual hours in use.
10. Owned and Other Equipment, Multiple Shifts: For multiple shift operations, the CRG single shift total hourly costs rate shall apply to the operating equipment during the first shift. For subsequent shifts, up to two in a 24-hour day, operating rate shall be the sum of the total hourly CRG operating cost and 60 percent of the CRG ownership and overhaul expense. Payment for idle or standby time for second and third shifts shall be 20 percent of the CRG ownership and overhaul expense.
11. When necessary to obtain owned equipment from sources beyond the Project limits, the actual cost to transfer equipment to the Site and return it to its original location will be allowed as an additional item of expense. Move-in and move-out allowances will not be made for equipment brought to the Project if the equipment is also used on original Contract or related Work.

©COPYRIGHT 2025 JACOBS

12. If the move-out destination is not to the original location, payment for move-out will not exceed payment for move-in.
13. If move is made by common carrier, the allowance will be the amount paid for the freight. If equipment is hauled with Contractor's own forces, rental will be allowed for the hauling unit plus the hauling unit operator's wage. If equipment is transferred under its own power, the rental will be 75 percent of the appropriate total hourly costs for the equipment, without attachments, plus the equipment operator's wage.
14. Charges for time utilized in servicing equipment to ready it for use prior to moving and similar charges will not be allowed.
15. When a breakdown occurs on any piece of owned equipment, payment shall cease for that equipment and any other owned equipment idled by the breakdown.
16. If any part of the Work is shut down by Owner, standby time will be paid during nonoperating hours if diversion of equipment to other Work is not practicable. Engineer reserves the right to cease standby time payment when an extended shutdown is anticipated.
17. If a rate has not been established in the CRG for owned equipment, Contractor may:
    a. If approved by Engineer, use the rate of the most similar model found, considering such characteristics as manufacturer, capacity, horsepower, age, and fuel type, or
    b. Request Equipment Watch to furnish a written response for a rate on the equipment, which shall be presented to Engineer for approval; or
    c. Request Engineer to establish a rate.

1.06 FIELD ORDER

A. Engineer will issue Field Orders, with three copies to Contractor.

B. Effective date of the Field Order shall be the date of signature by Engineer, unless otherwise indicated thereon.

C. Contractor shall acknowledge receipt by signing and returning one copy to Engineer.

D. Field Orders will be incorporated into subsequent Change Orders, as a no-cost change to the Contract.

PART 2 PRODUCTS (NOT USED)

PART 3 EXECUTION (NOT USED)

END OF SECTION

©COPYRIGHT 2025 JACOBS

SECTION 01 29 00
PAYMENT PROCEDURES

PART 1 GENERAL

1.01 SUBMITTALS

A. Informational Submittals:

1. Schedule of Values: Submit on a form acceptable to the Engineer.
2. Application for Payment.
3. Final Application for Payment.

1.02 ALLOWANCES

A. Consult with Engineer in selection of products or services. Obtain proposals from suppliers and installers and offer recommendations.

B. Submit, with application for payment, invoice showing date of purchase, from whom the purchase was made, the date of delivery of the product or service, and the price, including delivery to the Site and applicable taxes.

1.03 SCHEDULE OF VALUES

A. Prepare a separate Schedule of Values for each schedule of the Work under the Contract.

B. Upon request of Engineer, provide documentation to support the accuracy of the Schedule of Values.

C. Unit Price Work: Reflect unit price quantity and price breakdown from confirmed Bid Form.

D. Lump Sum Work:

1. Reflect specified allowances and alternates, as applicable.
2. List bonds and insurance premiums, mobilization, demobilization, preliminary and detailed progress schedule preparation, equipment testing, facility startup, and contract closeout separately.
3. Mobilization includes, at minimum, items identified in Section 01 50 00, Temporary Facilities and Controls.
4. Break down by Division 2 through 49 with appropriate subdivision of each Specification and or section by subproject.

©COPYRIGHT 2026 JACOBS

E. An unbalanced or front-end loaded schedule will not be acceptable.

F. Summation of the complete Schedule of Values representing all the Work shall equal the Contract Price.

G. Submit Schedule of Values in a spreadsheet format compatible with latest version of Microsoft Excel.

1.04 APPLICATION FOR PAYMENT

A. Transmittal Summary Form: Attach one summary form with each detailed Application for Payment for each schedule and include Request for Payment of Materials and Equipment on Hand as applicable. Execute certification by authorized officer of Contractor.

B. Use detailed Application for Payment Form suitable to Engineer.

C. Provide separate form for each schedule as applicable.

D. Include accepted Schedule of Values for each schedule or portion of lump sum Work and the unit price breakdown for the Work to be paid on a unit priced basis.

E. Include separate line item for each Change Order and Work Change Directive executed prior to date of submission. Provide further breakdown of such as requested by Engineer.

F. Preparation:

1. Round values to nearest dollar.
2. Submit Application for Payment, including a transmittal summary form and detailed Application for Payment form(s) for each schedule as applicable, a listing of materials on hand for each schedule as applicable, and such supporting data as may be requested by Engineer.

1.05 MEASUREMENT—GENERAL

A. Units of measure shown on Bid Form shall be as follows, unless specified otherwise.

©COPYRIGHT 2026 JACOBS

Item	Method of Measurement
LS	Lump Sum
AC	Acre—Field Measure by Engineer
CY	Cubic Yard—Field Measure by Engineer within limits specified or shown
CY-VM	Cubic Yard—Measured in Vehicle by Volume
EA	Each—Field Count by Engineer
GAL	Gallon—Field Measure by Engineer
HR	Hour
LB	Pound(s)—Weight Measure by Scale
LF	Linear Foot—Field Measure by Engineer
VF	Vertical Foot—Field Measure by Engineer
SF	Square Foot
SY	Square Yard
TON	Ton—Weight Measure by Scale (2,000 pounds)

1.06 PAYMENT

A. Payment for all Lump Sum Work shown or specified in Contract Documents is included in the Contract Price. Payment will be based on a percentage complete basis for each line item of the accepted Schedule of Values.

B. Payment for Lump Sum Work covers all Work specified or shown within the project limits or Specification sections. Limits of Work are as described herein, and/or as shown on the Drawings.

C. Payment for unit price items covers all the labor, materials, and services necessary to furnish and install the following items:

©COPYRIGHT 2026 JACOBS

Item	Description
1	MOBILIZATION AND DEMOBILIZATION Method of Measurement: Mobilization, demobilization and related expense shall be measured on a lump sum basis. This Item is meant for non-recurrent expenses related to establishment and close out of the Work. Basis of Payment: Mobilization, demobilization and related expense shall be paid for on a lump sum basis. This price and payment shall be full compensation for all costs associated with initiating and completing the Contract, exclusive of the cost of materials. Payment shall include compensation for all expenses related to moving plant and equipment onto and away from the jobsite, performance and payment bonds and other securities required, insurances, necessary permits and fees, pre-construction surveys, site preparation and the general costs associated with initiating the Work on site to assure that it is proceeding in a continuous manner. No additional payment shall be made for interim mobilization or demobilization associated with shutdown of Work by Contractor or Owner. a. Payments shall be made in two installments. 70% upon successful mobilization to the site. 30% upon successful demobilization from the site. The first installment shall coincide with the first month payment requisition. The second installment shall be made when the Contractor has completed all construction activity, including final cleanup, punch list Items, and satisfactory submission of As-Built documentation. b. Insurance and bond premiums and permit fees shall be paid in full at the time the cost is incurred. c. The cost for this Item shall not exceed five percent (5%) of the Total Bid Price, excluding this Item itself and Item 2.

©COPYRIGHT 2026 JACOBS

Item	Description
2	GENERAL REQUIREMENTS Method of Measurement: General requirements shall be measured on a lump sum basis. This Item is meant for costs related to administration and proper supervision of the Contract that may be one-time expenses or recurrent over the term of the Work. Basis of Payment: General requirements shall be paid for on a lump sum basis. This price and payment shall be full compensation for furnishing construction schedules including baseline and periodic updates, project superintendent, project manager, field office wages, dumpsters, security, fencing, utility charges, permits and fees, stormwater pollution prevention plan, progress photographs, testing and laboratory analysis, traffic control and flaggers, pest control, dust control, snow removal within work zone, initial inspection of existing structures, ongoing maintenance of as-built documents, equipment maintenance, project coordination, surveying, survey controls, staking out of easements, project closeout costs, coordination with utilities, preparation and submission of required submittals, waste management plan implementation, contract required documentation, and all temporary facilities, labor, equipment and materials required for or incidental to the Work for which separate payment is not provided under other Items. a. Payment shall be made as determined by the Owner on a percent complete basis in accordance with the accepted Schedule of Values. b. The cost for this Item shall not exceed ten percent (10%) excluding this Item itself and Item 1.

©COPYRIGHT 2026 JACOBS

3	GRAVITY SANITARY SEWER (Items 3a through 3e) Item 3.1 – 10” PVC Sanitary Sewer (0-12’ Deep) Item 3.2 – 10” PVC Sanitary Sewer (Greater than 12’ Deep) Item 3.3 – 10” Epoxy-Lined DI Sanitary Sewer (Greater than 12’ Deep) Item 3.4 – 15” PVC Sanitary Sewer (0-12’ Deep) Item 3.5 – 15” PVC Sanitary Sewer (Greater than 12’ Deep) Method of Measurement: The lengths of sewers to be paid for under the appropriate subdivision of this item shall be measured by the linear foot along the horizontal projection of the centerline of the completed sewer from the center of manhole to the center of manhole. Depth of pipe will be measured from the top of existing grade at the pipe alignment centerline prior to excavation, to the invert of the pipe. 85% of linear foot cost of the pipe shall be paid upon installation of the pipe. 15% of the linear foot cost shall be reserved for payment after satisfactory pressure testing, mandrel deflection testing, and CCTV inspection and final written approval by the Owner. All reductions in payment will be made prior to normal retainage. Basis of Payment: Under the Unit Prices for this item, the Contractor shall furnish all labor, materials, tools, equipment, and incidentals required for construction of PVC and DI gravity sewers complete. The unit prices shall also include wye, tee, or tee/wye branches of the same material as the sewer, or approved equal (one for each individual building, property, easement, right-of-way, and/or existing service in use, abutting the gravity sewer). The unit price shall include: all labor and materials required to make CCTV inspection of existing sewers as necessary to determine existing service connections; saw cutting the roadway for trenches; removal and disposal of pavement; clearing and grubbing; stripping and stockpiling; excavation; excavation support; geotechnical instrumentation and monitoring; dewatering; protection, support or temporary removal and replacement of existing utilities and structures in general; protection, support, temporary removal and replacement and/or repair of any utility lines broken and/or conflicting with construction for which separate payment is not provided under other items in the Bid; pipe; tee/wye branches; fittings; epoxy lining for DI sewers; polyethylene pipe encasement; installing and jointing pipe and fittings; connections to existing structures, including coring or otherwise enlarging the openings into manholes, removing bricks to accommodate new pipe, installing rubber boots or otherwise sealing pipe connections, rebuilding inverts and making other modifications as directed by the Engineer; and all required transition couplings; crushed

©COPYRIGHT 2026 JACOBS

Item	Description
	stone bedding; backfill; compaction; maintain existing sewer flows and services during construction; provide and operate all temporary by-pass flow equipment; removal and disposal of all existing sewer pipes and all appurtenances within proposed trench limits and as shown on Contract Documents; Utility Marker Tape; filter fabric; leakage and mandrel testing and CCTV inspection of the completed sewer; compacted gravel base on backfilled trenches under paved areas; landscaping restoration including loam and seed, wetlands protection and restoration; erosion controls as specified in the Contract Documents; removal and disposal of excess material from the job not specifically paid for elsewhere; replacing sidewalk damaged by construction activities to existing conditions; restoring any wheel chair ramps damaged by construction activities to cement concrete ADA compliant wheel chair ramps; restoration of all other features to match existing conditions; clean up and all other appurtenant materials and work incidental thereto and not specifically included for payment under other items.

©COPYRIGHT 2026 JACOBS

4	6” SANITARY SEWER SERVICES Method of Measurement: The length of sewer services to be paid for under this item will be on the basis of length of service pipe installed. Length will be measured along the horizontal projection of the centerline of the new service pipe, from the centerline of the sewer main to either a) the closest connection to the existing sewer service (when connecting to an existing service); or b) to the capped end of the new service pipe (when there is no existing sewer service). Basis of Payment: Under the unit price bid, the Contractor shall furnish all labor, materials, tools, equipment, and incidentals required for the construction of 6-inch sanitary sewer service connections from the sewer main in the street to the existing sanitary sewer service, as shown on the Contract Drawings or as directed by the Engineer. The unit price shall include: saw cutting the roadway for trenches; removal and disposal of pavement; clearing and grubbing; stripping and stockpiling; excavation; excavation support; geotechnical instrumentation and monitoring; dewatering; protection, support or temporary removal and replacement of existing utilities and structures in general; protection, support, temporary removal and replacement and/or repair of any utility lines broken and/or conflicting with construction for which separate payment is not provided under other items in the Bid; pipe; fittings; installing and jointing pipe and fittings; connecting pipe to tee/wye-branch or sewer chimney riser on gravity sewer main; connecting to existing services; providing wooden stakes at capped ends of new service where no existing service exists; transition couplings as required to connect to existing services; crushed stone bedding; backfill; compaction; maintain existing sewer flows and services during construction; provide and operate all temporary by-pass flow equipment; removal and disposal of all existing sewer services and all appurtenances within proposed trench limits and as shown on Contract Documents; Utility Marker Tape; filter fabric; compacted gravel base on backfilled trenches under paved areas; removal and replacement of private property required to install the service; landscaping restoration including loam and seed, wetlands protection and restoration; erosion controls as specified in the Contract Documents; removal and disposal of excess material from the job not specifically paid for elsewhere; replacing sidewalk damaged by construction activities to existing conditions; restoring any wheel chair ramps damaged by construction activities to cement concrete ADA compliant wheel chair ramps; restoration of all other features to match existing conditions; clean up and all other appurtenant materials and work incidental thereto and not specifically included for payment under other items.

©COPYRIGHT 2026 JACOBS

Item	Description
5	SANITARY SEWER SERVICE CHIMNEYS Method of Measurement: Payment for chimneys will be by the vertical foot from the invert of the sewer main to the top of the wye branch. The Contractor will not be paid for chimneys installed where the mainline crown is less than 12-feet deep unless shown specifically on the Contract Drawings or requested by the Engineer. Basis of Payment: Under the unit price bid, the Contractor shall furnish all labor, materials, tools, equipment, and incidentals required for furnishing, installing and testing chimneys as shown on the Drawings, as directed by the Engineer and as herein specified. Item shall include, but is not limited to: locating existing utilities; protection of utilities; repair and/or relocation of any utility lines broken and/or conflicting with construction for which separate payment is not provided under other items in the Bid; maintenance of existing flows and by-pass flow handling; excavation; excavation support; dewatering; disposal of excess excavated material pipe; vertical riser pipe; fittings; chimney structure; and all other appurtenant materials and work incidental thereto and not specifically included for payment under other items.

©COPYRIGHT 2026 JACOBS

Item	Description
6	SANITARY SEWER MANHOLES (Items 6a through 6b) Item 6.1 – 4’ Diameter Manhole Item 6.2 – 5’ Diameter Manhole Method of Measurement: Payment for sewer manholes under the appropriate subdivision of this item shall be measured by the vertical foot from the invert of the manhole at its center to the top of the manhole frame. 85% of vertical foot cost of the manhole shall be paid upon installation of the manhole. 15% of the vertical foot cost shall be reserved for payment after satisfactory leakage testing and final written approval by the Owner. All reductions in payment will be made prior to normal retainage. Basis of Payment: Under the unit price bid, the Contractor shall furnish all labor, materials, tools, equipment, and incidentals required for the Contractor to furnish and install manholes of reinforced precast concrete sections, complete, including concrete bases, riser sections, cones or top slabs, brick invert, frames and covers, flexible manhole sleeves, and brick under frames. The unit price shall include: all excavation; excavation support; geotechnical instrumentation and monitoring; dewatering; protection, support or temporary removal and replacement of existing utilities and structures in general; protection, support, temporary removal and replacement and/or repair of any utility lines broken and/or conflicting with construction for which separate payment is not provided under other items in the Bid; maintenance of all existing flows; remove and dispose of all existing manholes where called for; crushed stone bedding; backfill; compaction; connecting proposed sewer piping; reconnecting any existing pipes; internal drop manhole pipe and fittings, support straps and appurtenances; furnishing and installing damp proofing; testing for leakage; clean up; raising manhole frames to final finish grade; erosion controls as specified in the Contract Documents; removal and disposal of excess material from the job not specifically paid for elsewhere; replacing sidewalk damaged by construction activities to existing conditions; restoring any wheel chair ramps damaged by construction activities to cement concrete ADA compliant wheel chair ramps; restoration of all other features to match existing conditions; clean up and all other appurtenant materials and work incidental thereto and not specifically included for payment under other items.

©COPYRIGHT 2026 JACOBS

Item	Description
7	RCP Drain Pipe (Items 7a through 7b) Item 7.1 – 18” RCP Drain Pipe Item 7.2 – 12” RCP Drain Pipe Method of Measurement: Payment for drain pipe will be by the linear foot of storm drain installed as measured along the horizontal projection of the centerline of pipe. Basis of Payment: Under the unit price bid for this item, the Contractor shall furnish all labor, materials, tools, equipment, and incidentals required to furnish and install RCP storm drains as shown on the Contract Documents or approved by the Engineer. The unit price shall include: all labor and materials required to make connections to existing structures, including coring or otherwise enlarging the openings into catch basins and manholes, removing bricks to accommodate new pipe, installing rubber boots or otherwise sealing pipe connections, rebuilding inverts and making other modifications as directed by the Engineer; all required transition couplings, saw cutting the roadway for trenches, excavation, backfill, compaction, and excavation support; handling existing flows; remove and disposal of all existing pipes, manholes, utilities, or other structures within the proposed alignment as required; repair and/or relocation of any utility lines broken and/or conflicting with construction; filling abandoned pipes with controlled density fill; furnishing and placing backfill and bedding material, filter fabric, testing, furnishing and placing the compacted gravel base on backfilled trenches under paved areas, removing and resetting curbing if necessary, landscaping restoration including loam and seed, dewatering, removing and disposing excess material from the job, clean up and all other appurtenant materials and work incidental thereto and not specifically included for payment under other items .

©COPYRIGHT 2026 JACOBS

Item	Description
8	STORM DRAIN MANHOLES Method of Measurement: Payment for drain manholes will be measured by the vertical foot from the invert of the manhole at its center to the top of the manhole frame. Basis of Payment: Under the unit price bid, the Contractor shall furnish all labor, materials, tools, equipment, and incidentals required for the Contractor to furnish and install manholes of reinforced precast concrete sections, complete, including concrete bases, riser sections, cones or top slabs, brick invert, frames and covers, flexible manhole sleeves, and brick under frames. The unit price shall include: all excavation; excavation support; geotechnical instrumentation and monitoring; dewatering; protection, support or temporary removal and replacement of existing utilities and structures in general; protection, support, temporary removal and replacement and/or repair of any utility lines broken and/or conflicting with construction for which separate payment is not provided under other items in the Bid; maintenance of all existing flows; remove and dispose of all existing manholes where called for; crushed stone bedding; backfill; compaction; connecting proposed drain piping; reconnecting any existing pipes; furnishing and installing damp proofing; testing for leakage; clean up; raising manhole frames to final finish grade; erosion controls as specified in the Contract Documents; removal and disposal of excess material from the job not specifically paid for elsewhere; replacing sidewalk damaged by construction activities to existing conditions; restoring any wheel chair ramps damaged by construction activities to cement concrete ADA compliant wheel chair ramps; restoration of all other features to match existing conditions; clean up and all other appurtenant materials and work incidental thereto and not specifically included for payment under other items.

©COPYRIGHT 2026 JACOBS

Item	Description
9	EXPLORATORY EXCAVATION Method of Measurement: Payment will be based on the actual cubic yards of material excavated, as approved by the Engineer prior to excavation. Basis of Payment: Under the unit price bid, the Contractor shall furnish all labor, materials, tools, equipment, and incidentals required for the Contractor to excavate and backfill as shown on Contract Documents and as directed by the Engineer to locate pipe, utilities, possible obstructions, and other subsurface features. Included under the unit price is payment for: excavation; backfill; dewatering; compaction; excavation support; restoration of all other features to match existing conditions; clean up and all other appurtenant materials and work incidental thereto and not specifically included for payment under other items.

©COPYRIGHT 2026 JACOBS

Item	Description
10	ROCK EXCAVATION Method of Measurement: payment for rock excavation will be on the basis of cubic yards of rock excavated as measured by the Engineer. Depth of rock in pipe trenches will be measured from the rock surface to 6-inches below the invert of the pipe and the maximum width shall be determined as outlined in the Typical Gravity Sewer Trench Detail and Notes, included in the Contract Drawings. Any rock excavated to a depth or width greater than the above shall be backfilled with gravel borrow at the Contractor's expense. The pay limit for rock removal outside manholes will be one foot outside the widest dimension of the structure, two feet outside of concrete work for which forms are required, except footings, or the maximum trench width, whichever is greater. Any rock excavated to a depth or width greater than that as shown on the Drawings, as directed by the Engineer or herein specified shall not be paid for and shall be backfilled with gravel at the Contractor's expense Basis of Payment: Under the unit price bid, the Contractor shall furnish all labor, materials, tools, equipment, and incidentals required for the Contractor to excavate, remove, dispose of rock from trenches and excavated areas, and replacement with suitable gravel material. Ledge and rock measured in place less than 1 cubic yard will not be measured for payment under this Item and will be considered earth excavation. Only ledge and rock that cannot be excavated with earth excavation equipment, in the opinion of the Engineer, shall be considered for measurement for payment under this Item. Excavated rock which has not been disposed of will not be included for payment. This item also includes pre-rock removal surveys in accordance with the Specifications and/or state and local ordinances and rules.

©COPYRIGHT 2026 JACOBS

Item	Description
11	EXCAVATION OF UNSUITABLE MATERIAL BELOW GRADE Method of Measurement: Payment will be on the basis of cubic yards of unsuitable material excavated, transported, disposed of, and replaced as measured by the Engineer. The depth of unsuitable material in pipe trenches shall be measured from 6 inches below the invert of the pipe to the depth of replacement below that level. The width of unsuitable material shall be the allowable trench width as outlined in the Typical Gravity Sewer Trench Detail and Notes included in the Contract Drawings. The depth of unsuitable material in structure excavations shall be measured from 12 inches below the bottom of the structure slab to the depth of replacement below that level. The width of unsuitable material in structure excavations will be one foot outside the widest dimension of the structure. Basis of Payment: Under the unit price bid, the Contractor shall furnish all labor, materials, tools, equipment, and incidentals required for the Contractor to remove peat or other unsuitable material below the grade of structures, pipe or manholes as approved by the Engineer. Included under the unit price is payment for: loading, transport, and disposal of unsuitable material away from the job; furnish, place, and compact approved gravel borrow material in the place of material removed; excavation; excavation support; dewatering; compaction; and all other appurtenant materials and work incidental thereto and not specifically included for payment under other items.

©COPYRIGHT 2026 JACOBS

Item	Description
12	HOT BITUMINOUS PAVEMENT (HBP) (Items 12a through 12d) Item 12.1 – HBP – Temporary Pavement (2” depth) Item 12.2 – HBP – Permanent Class 4 (6” depth, Bunker Hill Ave Only) Item 12.3 – HBP – Permanent Class 1 (4” depth) Item 12.4 – HBP – Overlay Class 1 (2” depth) Item 12.5 – HBP – Hand Method for Driveways (2” depth) Method of Measurement: Hot bituminous pavement paid for under the appropriate subdivision of this Item shall be by the ton of the various types of pavement delivered and installed less the quantity placed beyond specified thickness or outside payment limits. Payment limits will be as shown on the Drawings. The Contractor shall submit to the Engineer weight slips for hot bituminous pavement delivered and placed. The Engineer will measure pavement placed within the specified payment limits and multiply the area by the specified thickness and by a coefficient of 0.058 tons per square yard per inch of thickness to obtain the tonnage of hot bituminous pavement. Payment will be made based on the number of tons obtained using the measured in place method or the weight slips, whichever is less. Pavement placed to adjust for settlement shall be at the Contractor’s expense. Basis of Payment: Under the unit price bid, the Contractor shall furnish all labor, materials, tools, equipment, and incidentals required for the Contractor to furnish and install hot bituminous pavement as shown on the Drawings, as directed by the Engineer and as herein specified. Item shall include, but is not limited to: pavement materials; saw cutting and preparing the edges of the existing pavement as required to accept new pavement; removal and disposal of existing and temporary pavement; tack coat; placement; compaction; installation of temporary and permanent pavement markings; adjusting valve boxes, frames and covers, frames and grates, and other castings and structures not provided in other items in the Bid; and all work necessary for the installation of hot bituminous pavement.

©COPYRIGHT 2026 JACOBS

Item	Description
13	BITUMINOUS EXCAVATION BY COLD PLANING Method of Measurement: Payment shall be based on the actual square yards of asphalt pavement cold planed, to the depth indicated and within the payment limits shown on the Contract Drawings or as directed by the Engineer. Basis of Payment: Under the unit price bid for this item, the Contractor shall furnish all labor, materials, tools, equipment, and incidentals required to cold plane existing bituminous concrete pavement to the depth and payment limits indicated, as shown on the Contract Documents or as directed by the Engineer. The work includes, but is not limited to the following; removing, hauling, stockpiling, and disposal of cold planed bituminous concrete material; sweeping after the cold planning operation; removal of bituminous concrete from around existing structures and castings; providing transitions at the limits of the cold planning as directed by the Engineer; providing and maintaining temporary bituminous concrete aprons at transitions and castings until final paving; maintaining the cold planed surface until final paving; and all incidental work not included for payment elsewhere required to cold plane existing bituminous concrete pavement and subsequently maintain the surface until final paving, not included for payment elsewhere.

©COPYRIGHT 2026 JACOBS

Item	Description
14	MAINTENANCE AND PROTECTION OF TRAFFIC Method of Measurement: Payment for Traffic Management will be on a percent of the Lump Sum bid calculated by dividing the elapsed time to date by the contractual construction duration limit as approved by the Engineer. Basis of Payment: Under the unit price bid for this item, the Contractor shall furnish all labor, materials, tools, equipment, and incidentals required to provide, maintain, relocate, and remove Traffic Management and Control to areas directly or indirectly influenced by construction within the limits of work or outside the limits of work; along truck routes inside or outside the limits of work; as delineated in the approved Traffic Management Plan, by the MUTCD, ADA, and CTDOT standards; and as further directed by the Owner and Engineer. The work further includes, but is not limited to; obtaining permits; coordination with the City of Waterbury Department of Public Works, Police Department, Fire Department, School Department, and Traffic and Parking Department; coordination with private property owners within the limits of work; preparing, submitting, reviewing, implementing, and revising traffic management and control plans; furnishing, installing, and maintaining traffic management devices based on approved traffic management and control plans including temporary traffic signals and signal programming, precast concrete barriers, reflectorized drums, lane delineators, portable barricades, temporary crosswalks, and cones; coordinating mobilization and demobilization of variable message boards (VMBs to be provided by the City); temporary pavement markings; removal of temporary and existing pavement markings; furnishing, installing, pinning, maintaining, and removing steel road plates; ordering and coordinating police details and/or flaggers; furnishing and installing temporary construction fencing; maintaining roadways and sidewalks inside or outside the limits of work; establishing and dismantling detours; covering existing traffic signs; obtaining, posting and maintaining “No Parking” signs; meeting with police details daily; coordinating police detail locations; and all incidental work, whether listed here or not, required to provide maintenance and protection of traffic and pedestrians.

©COPYRIGHT 2026 JACOBS

Item	Description
15	UNIFORMED POLICE Method of Measurement: Uniformed police details will be paid for on the basis of actual expenses/invoices billed to the Contractor by the Police Department in the normal course of providing supervision for traffic control during construction operations. Uniformed police and police car fees, when required by the Chief of Police, shall be paid for under the allowance item included in the Bid. The amount of the allowance in the Bid is approximate, and the actual amount to be paid may be more or less, but shall match the actual amount paid to the Police Department as authorized by the Engineer. Basis of Payment: If the uniformed police expenses are greater than the stated allowance amount, the Contractor shall be reimbursed the difference in the actual costs as billed. Any unexpended amount of the allowance shall remain with the owner as a credit on the total base bid. No mark-up for uniformed police shall be allowed. Only documented police invoice amounts shall be reimbursed to the Contractor. No payment will be allowed for police details ordered but not utilized due to the Contractor's cancellation of work activities without appropriate advance notification to the Police Department in accordance with the requirements of the Police Department. No payment will be allowed for uniformed police required due to the Contractor's failure to furnish and maintain traffic control measures including but not limited to project signage, barriers, and warning devices in accordance with the Contract Documents and the Contractor's Traffic Control Plan, as approved by the Engineer. Uniformed police requirements will be determined by the local or state authority having jurisdiction in the public right-of-way.

©COPYRIGHT 2026 JACOBS

Item	Description
16	CERTIFIED TRAFFIC CONTROL FLAG PERSONS Method of Measurement: Payment shall be based on the actual number of man-hours for which certified traffic control flag persons are provided at the site. At the end of each month, Contractor shall provide the Engineer with documentation regarding the number of man-hours Basis of Payment: Under the unit price bid for this item, the Contractor shall furnish all labor, materials, tools, equipment, and incidentals required to provide certified traffic control flag persons. The use of certified traffic control flag persons, in lieu of uniformed police for traffic control, shall be subject to approval by the local or state authority having jurisdiction in the public right-of-way.
17	UTILITY SUPPORT AND COORDINATION Method of Measurement: Payment for Utility Support and Coordination shall be on a percent of the lump sum amount complete, as determined by the Contractor's approved Schedule of Values for this item. Basis of Payment: Under the lump sum price bid for this item, the Contractor shall furnish all labor, materials, tools, equipment and incidentals required to maintain continuity of storm drains, sanitary sewers, gas, telephone, electric, telecommunications, cable TV, and all privately owned utilities. The work includes all service, trunk, supply, transmission and main lines impacted by the Work. The Contractor shall also furnish all labor, materials, tools, equipment and incidentals to coordinate and/or temporarily support all utilities exposed during the excavation for the installation of the Work; equipment and incidentals to coordinate and/or temporarily support all utilities poles required to facilitate the excavation and for the installation of the Work; submission of all utility coordination and support work plans and shop drawings; coordinate the protection of and protect all overhead utilities; and perform all coordination with the utility companies for the relocation, protection, support, and other work required to facilitate the completion of the project. This Item further includes utility location (Dig Safe); coordination of construction with existing utility owners and operators; providing access for utility owners and operators to their respective utilities; and communicating with affected homeowners and residents.

©COPYRIGHT 2026 JACOBS

Item	Description
18	ELECTRIC UTILITY FEES Method of Measurement: Electric utility fees related to the project shall be paid for under the allowance item included in the Bid. The amount of the allowance in the Bid is approximate, and the actual amount to be paid may be more or less, but shall match the actual amount paid to the electric utility as authorized by the Owner and Engineer. Basis of Payment: This items includes construction-related fees paid to the electric utility, including administrative fees, fees for supporting and protecting existing utility poles and overhead wires, and any electric utility relocation work that may be necessary for which payment is not provided elsewhere in the Bid.

1.07 NONPAYMENT FOR REJECTED OR UNUSED PRODUCTS

A. Payment will not be made for following:

1. Loading, hauling, and disposing of rejected material.
2. Quantities of material wasted or disposed of in manner not called for under Contract Documents.
3. Rejected loads of material, including material rejected after it has been placed by reason of failure of Contractor to conform to provisions of Contract Documents.
4. Material not unloaded from transporting vehicle.
5. Defective Work not accepted by Owner.
6. Material remaining on hand after completion of Work.
7. Materials or equipment not stored properly.

1.08 PARTIAL PAYMENT FOR STORED MATERIALS AND EQUIPMENT

A. Partial Payment: No partial payments will be made for materials and equipment delivered and/or stored on site unless Shop Drawings of said delivered equipment are approved and acceptable to Engineer.

B. Final Payment: Will be made only for products incorporated in Work; remaining products, for which partial payments have been made, shall revert to Contractor unless otherwise agreed, and partial payments made for those items will be deducted from final payment.

©COPYRIGHT 2026 JACOBS

PART 2 PRODUCTS (NOT USED)

PART 3 EXECUTION (NOT USED)

END OF SECTION

©COPYRIGHT 2026 JACOBS

SECTION 01 31 13
PROJECT COORDINATION

PART 1 GENERAL

1.01 RELATED WORK AT SITE

A. General:

1. Other work that is either directly or indirectly related to scheduled performance of the Work under these Contract Documents, listed henceforth, is anticipated to be performed within the project limits as described in Section 01 11 00.
2. Coordinate the Work of these Contract Documents with work of others as specified in General Conditions and Special Conditions.
3. Include sequencing constraints specified herein as a part of progress schedule.

1.02 WORK SEQUENCING

A. As indicated in the Drawings

1.03 FACILITY OPERATIONS

A. Continuous operation of Owner's facilities is of critical importance. Schedule and conduct activities to enable existing facilities to operate continuously, unless otherwise specified.

B. Perform Work continuously during critical connections and changeovers, and as required to prevent interruption of Owner's operations.

C. When necessary, plan, design, and provide various temporary services, utilities, connections, temporary piping and heating, access, and similar items to maintain continuous operations of Owner's facility.

D. Do not close lines, open or close valves, or take other action which would affect the operation of existing systems, except as specifically required by the Contract Documents and after authorization by Owner and Engineer. Such authorization will be considered within 48 hours after receipt of Contractor's written request.

E. Do not proceed with Work affecting a facility's operation without obtaining Owner's and Engineer's advance approval of the need for and duration of such Work.

©COPYRIGHT 2025 JACOBS

1.04 CONSTRUCTION PHOTOGRAPHS

A. General:

1. Photographically document all phases of the Project including preconstruction, construction progress, and post-construction.
2. Photography shall be by a professional commercial photographer, experienced in shooting interior/exterior construction photos, in daylight conditions, and in good and inclement weather.
3. Engineer shall have right to select subject matter and vantage point from which photographs are to be taken.

B. Preconstruction and Post-construction:

1. After Effective Date of the Agreement and before Work at Site is started, and again upon issuance of Substantial Completion, take a minimum of 24 photographs of Site and property adjacent to perimeter of Site.
2. Format: Digital, 8 megabyte .JPEG.

C. Construction Progress Photos:

1. Photographically demonstrate progress of construction, showing every aspect of Site and adjacent properties as well as interior and exterior of new or impacted structures.
2. Monthly: Take 12 photographs using format as stated in paragraph Preconstruction and Post-construction above.

D. Documentation:

1. Color Prints:
   a. Minimum Size: 5 inches by 7 inches.
   b. Finish: Glossy.
   c. Label Each Print:
      1) Project name.
      2) Date and time photo was taken.
      3) Photographer’s name.
      4) Caption (maximum 30 characters).
      5) Location and area designation.
      6) Number of sets, two.
   d. Assemble in bound albums in clear plastic sleeves that facilitate viewing both front and back of each photograph.
   e. Assemble negatives in their corresponding album in clear plastic sleeves made for the purpose.

©COPYRIGHT 2025 JACOBS

1.05 REFERENCE POINTS AND SURVEYS

A. Location and elevation of benchmarks are shown on Drawings.

B. Contractor's Responsibilities:

1. Provide additional survey and layout required to lay out the Work.
2. Check and establish exact location of existing facilities prior to construction of new facilities and any connections thereto.
3. In the event of discrepancy in data or staking provided by Owner, request clarification before proceeding with Work.
4. Maintain complete accurate log of survey work as it progresses as a Record Document.
5. On request of Engineer, submit documentation.
6. Provide competent employee(s), tools, stakes, and other equipment and materials as Engineer may require to:
   a. Check layout, survey, and measurement work performed by others.
   b. Measure quantities for payment purposes.

PART 2 PRODUCTS (NOT USED)

PART 3 EXECUTION

3.01 SALVAGE OF MATERIALS: NOT USED

A. The only salvaged equipment identified for this Project shall be the 25-foot high light pole at the existing front entrance gate and associated light fixture. Pole shall be turned over to Jacobs and the light fixture shall be reinstalled on the new gate entrance pole. All other materials removed by the Contractor through the demolition process shall become property of the Contractor as stated in Specification Section 02 41 00, Demolition.

END OF SECTION

©COPYRIGHT 2025 JACOBS

SECTION 01 31 19
PROJECT MEETINGS

PART 1 GENERAL

1.01 GENERAL

A. Engineer will schedule physical arrangements for meetings throughout progress of the Work, prepare meeting agenda with regular participant input and distribute with written notice of each meeting, preside at meetings, record minutes to include significant proceedings and decisions, and reproduce and distribute copies of minutes within 5 days after each meeting to participants and parties affected by meeting decisions.

1.02 PRECONSTRUCTION CONFERENCE

A. Contractor shall be prepared to discuss the following subjects, as a minimum:

1. Required schedules.
2. Status of bonds and insurance.
3. Sequencing of critical path work items.
4. Progress payment procedures.
5. Project changes and clarification procedures.
6. Use of Site, access, office and storage areas.
7. Maintenance of operation.
8. Major product delivery and priorities.
9. Contractor’s safety plan and representative.

B. Attendees will include:

1. Owner’s representatives.
2. Contractor’s superintendent.
3. Subcontractors’ representatives whom Engineer may request to attend.
4. Engineer’s representatives.
5. Others as appropriate.

1.03 PRELIMINARY SCHEDULES REVIEW MEETING

A. As set forth in General Conditions.

©COPYRIGHT 2025 JACOBS

1.04 PROGRESS MEETINGS

A. Engineer will schedule regular progress meetings at Site, conducted bi-monthly to review the Work progress, progress schedule, Schedule of Submittals, Application for Payment, contract modifications, and other matters needing discussion and resolution.

B. Attendees will include:

1. Owner's representative(s), as appropriate.
2. Contractor.
3. Engineer's representative(s).
4. Others as appropriate.

1.05 PREINSTALLATION MEETINGS

A. When required in individual Specification sections, convene at Site prior to commencing the Work of that section.

B. Require attendance of entities directly affecting, or affected by, the Work of that section.

C. Notify Engineer 7 days in advance of meeting date.

D. Provide suggested agenda to Engineer to include reviewing conditions of installation, preparation and installation or application procedures, and coordination with related Work and work of others.

1.06 OTHER MEETINGS

A. In accordance with Contract Documents and as may be required by Owner and Engineer.

PART 2 PRODUCTS (NOT USED)

PART 3 EXECUTION (NOT USED)

END OF SECTION

©COPYRIGHT 2025 JACOBS

SECTION 01 32 00
CONSTRUCTION PROGRESS DOCUMENTATION

PART 1 GENERAL

1.01 SUBMITTALS

A. Informational Submittals:

1. Preliminary Progress Schedule: Submit within time specified in Paragraph 2.03 of the General Conditions.
2. Detailed Progress Schedule:
   a. Submit initial Detailed Progress Schedule within 10 days after Effective Date of the Agreement.
   b. Submit an Updated Progress Schedule at each update, in accordance with Article Detailed Progress Schedule.
3. Submit with Each Progress Schedule Submission:
   a. Contractor's certification that Progress Schedule submission is actual schedule being used for execution of the Work.
   b. Electronic file compatible with latest version of Project Planner (P6) by Primavera Systems, Inc., unless otherwise approved by Engineer. Also provide PDF copies.
   c. Progress Schedule: Four legible copies.
   d. Narrative Progress Report: Same number of copies as specified for Progress Schedule.
   e. Progress Quantity Chart(s).
4. Prior to final payment, submit a final Updated Progress Schedule.

1.02 SCHEDULE COORDINATION (NOT USED)

1.03 PRELIMINARY PROGRESS SCHEDULE

A. In addition to basic requirements outlined in General Conditions, show a detailed schedule, beginning with Notice to Proceed, for minimum duration of 90 days, and a summary of balance of Project through Final Completion.

B. Show activities including, but not limited to the following (as applicable):

1. Notice to Proceed.
2. Permits.
3. Submittals, with review time. Contractor may use Schedule of Submittals specified in Section 01 33 00, Submittal Procedures.
4. Early procurement activities for long lead equipment and materials.
5. Initial Site work.
6. Earthwork.

©COPYRIGHT 2025 JACOBS

7. Specified Work sequences and construction constraints.
8. Contract Milestone and Completion Dates.
9. Owner-furnished products delivery dates or ranges of dates.
10. Major structural, mechanical, equipment, electrical, architectural, and instrumentation and control Work.
11. System startup summary.
12. Project close-out summary.
13. Demobilization summary.

C. Update Preliminary Progress Schedule monthly as part of progress payment process. Failure to do so may result in the Owner withholding all or part of the monthly progress payment until the Preliminary Progress Schedule is updated in a manner acceptable to Engineer.

D. Format: In accordance with Article Progress Schedule.

1.04 DETAILED PROGRESS SCHEDULE

A. In addition to requirements of General Conditions, submit Detailed Progress Schedule beginning with Notice to Proceed and continuing through Final Completion.

B. Show the duration and sequences of activities required for complete performance of the Work reflecting means and methods chosen by Contractor.

C. When accepted by Engineer, Detailed Progress Schedule will replace Preliminary Progress Schedule and become Baseline Schedule. Subsequent revisions will be considered as Updated Progress Schedules.

D. Format: In accordance with Article Progress Schedule.

E. Update monthly to reflect actual progress and occurrences to date, including weather delays.

1.05 PROGRESS SCHEDULE—BAR CHART

A. General: Comprehensive bar chart schedule, generally as outlined in Associated General Contractors of America (AGC) 580, “Construction Project Planning and Scheduling Guidelines.” If a conflict occurs between the AGC publication and this specification, this specification shall govern.

©COPYRIGHT 2025 JACOBS

B. Format:

1. Unless otherwise approved, white paper, 11-inch by 17-inch sheet size.
2. Title Block: Show name of Project and Owner, date submitted, revision or update number, and name of scheduler.
3. Identify horizontally, across the top of the schedule, the time frame by year, month, and day.
4. Identify each activity with a unique number and a brief description of the Work associated with that activity.
5. Legend: Describe standard and special symbols used.

C. Contents: Identify, in chronological order, those activities reasonably required to complete the Work, including as applicable, but not limited to:

1. Obtaining permits, submittals for early product procurement, and long lead time items.
2. Mobilization and other preliminary activities.
3. Initial Site work.
4. Specified Work sequences, constraints, and Milestones, including Substantial Completion date(s).
5. Subcontract Work.
6. Major equipment design, fabrication, factory testing, and delivery dates.
7. Delivery dates for Owner-furnished products, as specified in Section 01 11 00, Summary of Work.
8. Sitework.
9. Concrete Work.
10. Structural steel Work.
11. Architectural features Work.
12. Conveying systems Work.
13. Equipment Work.
14. Mechanical Work.
15. Electrical Work.
16. Instrumentation and control Work.
17. Interfaces with Owner-furnished equipment.
18. Other important Work for each major facility.
19. Equipment and system startup and test activities.
20. Project closeout and cleanup.
21. Demobilization.

1.06 PROGRESS SCHEDULE—CRITICAL PATH NETWORK

A. General: Comprehensive computer-generated schedule using CPM, generally as outlined in Associated General Contractors of America (AGC) 580, “Construction Project Planning and Scheduling Guidelines.” If a conflict

©COPYRIGHT 2025 JACOBS

occurs between the AGC publication and this specification, this specification shall govern.

B. Contents:

1. Schedule shall begin with the date of Notice to Proceed and conclude with the date of Final Completion.
2. Identify Work calendar basis using days as a unit of measure.
3. Show complete interdependence and sequence of construction and Project-related activities reasonably required to complete the Work.
4. Identify the Work of separate stages and other logically grouped activities, and clearly identify critical path of activities.
5. Reflect sequences of the Work, restraints, delivery windows, review times, Contract Times and Project Milestones set forth in the Agreement and Section 01 31 13, Project Coordination.
6. Include as applicable, at a minimum:
    a. Obtaining permits, submittals for early product procurement, and long lead time items.
    b. Mobilization and other preliminary activities.
    c. Initial Site work.
    d. Specified Work sequences, constraints, and Milestones, including Substantial Completion date(s) Subcontract Work.
    e. Major equipment design, fabrication, factory testing, and delivery dates.
    f. Delivery dates for Owner-furnished products, as specified in Section 01 11 00, Summary of Work.
    g. Sitework.
    h. Concrete Work.
    i. Structural steel Work.
    j. Architectural features Work.
    k. Conveying systems Work.
    l. Equipment Work.
    m. Mechanical Work.
    n. Electrical Work.
    o. Instrumentation and control Work.
    p. Interfaces with Owner-furnished equipment.
    q. Other important Work for each major facility.
    r. Equipment and system startup and test activities.
    s. Project closeout and cleanup.
    t. Demobilization.
7. No activity duration, exclusive of those for Submittals review and product fabrication/delivery, shall be less than 1 day nor more than 30 days, unless otherwise approved.

©COPYRIGHT 2025 JACOBS

8. Activity duration for Submittal review shall not be less than review time specified unless clearly identified and prior written acceptance has been obtained from Engineer.

C. Network Graphical Display:

1. Plot or print on paper not greater than 30 inches by 42 inches or smaller than 22 inches by 34 inches, unless otherwise approved.
2. Title Block: Show name of Project, Owner, date submitted, revision or update number, and the name of the scheduler. Updated schedules shall indicate data date.
3. Identify horizontally across top of schedule the time frame by year, month, and day.
4. Identify each activity with a unique number and a brief description of the Work associated with that activity.
5. Indicate the critical path.
6. Show, at a minimum, the controlling relationships between activities.
7. Plot activities on a time-scaled basis, with the length of each activity proportional to the current estimate of the duration.
8. Plot activities on an early start basis unless otherwise requested by Engineer.
9. Provide a legend to describe standard and special symbols used.

D. Schedule Report:

1. On 8-1/2-inch by 11-inch white paper, unless otherwise approved.
2. List information for each activity in tabular format, including at a minimum:
   a. Activity Identification Number.
   b. Activity Description.
   c. Original Duration.
   d. Remaining Duration.
   e. Early Start Date (Actual start on Updated Progress Schedules).
   f. Early Finish Date (Actual finish on Updated Progress Schedules).
   g. Late Start Date.
   h. Late Finish Date.
   i. Total Float.
3. Sort reports, in ascending order, as listed below:
   a. Activity number sequence with predecessor and successor activity.

E. Cost-Loading (NOT USED)

©COPYRIGHT 2025 JACOBS

1.07 PROGRESS QUANTITY CHARTS (NOT USED)

1.08 PROGRESS OF THE WORK

A. Updated Progress Schedule shall reflect:

1. Progress of Work to within 5 working days prior to submission.
2. Approved changes in Work scope and activities modified since submission.
3. Delays in Submittals or resubmittals, deliveries, or Work.
4. Adjusted or modified sequences of Work.
5. Other identifiable changes.
6. Revised projections of progress and completion.
7. Report of changed logic.

B. Produce detailed subschedules during Project, upon request of Owner or Engineer, to further define critical portions of the Work such as facility shutdowns.

C. If an activity is not completed by its latest scheduled completion date and this failure is anticipated to extend Contract Times (or Milestones), submit, within 7 days of such failure, a written statement as to how nonperformance will be corrected to return Project to acceptable current Progress Schedule. Actions by Contractor to complete the Work within Contract Times (or Milestones) will not be justification for adjustment to Contract Price or Contract Times.

D. Owner may order Contractor to increase plant, equipment, labor force, or working hours if Contractor fails to:

1. Complete a Milestone activity by its completion date.
2. Satisfactorily execute Work as necessary to prevent delay to overall completion of Project, at no additional cost to Owner.

1.09 NARRATIVE PROGRESS REPORT

A. Format:

1. Organize same as Progress Schedule.
2. Identify, on a cover letter, reporting period, date submitted, and name of author of report.

©COPYRIGHT 2025 JACOBS

B. Contents:

1. Number of days worked over the period, work force on hand, construction equipment on hand (including utility vehicles such as pickup trucks, maintenance vehicles, stake trucks).
2. General progress of Work, including a listing of activities started and completed over the reporting period, mobilization/demobilization of subcontractors, and major milestones achieved.
3. Contractor's plan for management of Site (for example, lay down and staging areas, construction traffic), use of construction equipment, buildup of trade labor, and identification of potential Contract changes.
4. Identification of new activities and sequences as a result of executed Contract changes.
5. Documentation of weather conditions over the reporting period, and any resulting impacts to the Work.
6. Description of actual or potential delays, including related causes, and the steps taken or anticipated to mitigate their impact.
7. Changes to activity logic.
8. Changes to the critical path.
9. Identification of, and accompanying reason for, any activities added or deleted since the last report.
10. Steps taken to recover the schedule from Contractor-caused delays.

1.10 SCHEDULE ACCEPTANCE

A. Engineer's acceptance will demonstrate agreement that:

1. Proposed schedule is accepted with respect to:
   a. Contract Times, including Final Completion and all intermediate Milestones, are within the specified times.
   b. Specified Work sequences and constraints are shown as specified.
   c. Specified Owner-furnished Equipment or Material arrival dates, or range of dates, are included.
   d. Access restrictions are accurately reflected.
   e. Startup and testing times are as specified.
   f. Submittal review times are as specified.
   g. Startup testing duration is as specified and timing is acceptable.
2. In all other respects, Engineer's acceptance of Contractor's schedule indicates that, in Engineer's judgment, schedule represents reasonable plan for constructing Project in accordance with the Contract Documents. Engineer's review will not make any change in Contract requirements. Lack of comment on any aspect of schedule that is not in accordance with the Contract Documents will not thereby indicate acceptance of that change, unless Contractor has explicitly called the nonconformance to Engineer's attention in submittal. Schedule remains

©COPYRIGHT 2025 JACOBS

Contractor's responsibility and Contractor retains responsibility for performing all activities, for activity durations, and for activity sequences required to construct Project in accordance with the Contract Documents.

B. Unacceptable Preliminary Progress Schedule:

1. Make requested corrections; resubmit within 10 days.
2. Until acceptable to Engineer as Baseline Progress Schedule, continue review and revision process, including updating schedule on a monthly basis to reflect actual progress and occurrences to date.

C. Unacceptable Detailed Progress Schedule:

1. Make requested corrections; resubmit within 10 days.
2. Until acceptable to Engineer as Baseline Progress Schedule, continue review and revision process.

D. Narrative Report: All changes to activity duration and sequences, including addition or deletion of activities subsequent to Engineer's acceptance of Baseline Progress Schedule, shall be delineated in Narrative Report current with proposed Updated Progress Schedule.

1.11 ADJUSTMENT OF CONTRACT TIMES

A. Reference General Conditions and Section 01 26 00, Contract Modification Procedures.

B. Evaluation and reconciliation of Adjustments of Contract Times shall be based on the Updated Progress Schedule at the time of proposed adjustment or claimed delay.

C. Schedule Contingency:

1. Contingency, when used in the context of the Progress Schedule, is time between Contractor's proposed Completion Time and Contract Completion Time.
2. Contingency included in Progress Schedule is a Project resource available to both Contractor and Owner to meet Contract Milestones and Contract Times. Use of Schedule contingency shall be shared to the proportionate benefit of both parties.
3. Use of schedule contingency suppression techniques such as preferential sequencing and extended activity times is prohibited.

D. Float:

©COPYRIGHT 2025 JACOBS

1. Float time is a Project resource available to both parties to meet contract Milestones and Contract Times.
2. Use of float suppression techniques such as preferential sequencing or logic, special lead/lag logic restraints, and extended activity times are prohibited, and use of float time disclosed or implied by use of alternate float-suppression techniques shall be shared to proportionate benefit of Owner and Contractor.

E. Claims Based on Contract Times:

1. Where Engineer has not yet rendered formal decision on Contractor's Claim for adjustment of Contract Times, and parties are unable to agree as to amount of adjustment to be reflected in Progress Schedule, reflect an interim adjustment in the Progress Schedule as acceptable to Engineer.
2. It is understood and agreed that such interim acceptance will not be binding on either Contractor or Owner, and will be made only for the purpose of continuing to schedule Work until such time as formal decision has been rendered as to an adjustment, if any, of the Contract Times.
3. Revise Progress Schedule prepared thereafter in accordance with Engineer's formal decision.

PART 2 PRODUCTS (NOT USED)

PART 3 EXECUTION (NOT USED)

END OF SECTION

©COPYRIGHT 2025 JACOBS

SECTION 01 33 00
SUBMITTAL PROCEDURES

PART 1 GENERAL

1.01 DEFINITIONS

A. Action Submittal: Written and graphic information submitted by Contractor that requires Engineer's approval.

B. Deferred Submittal: Information submitted by Contractor for portions of design that are to be submitted to permitting agency for approval prior to installation of that portion of the Work, along with Engineer's review documentation that submittal has been found to be in general conformance with Project's design.

C. Informational Submittal: Information submitted by Contractor that requires Engineer's review and determination that submitted information is in accordance with the Conditions of the Contract.

1.02 PROCEDURES

A. Direct submittals to Engineer at the following, unless specified otherwise.

1. Electronic Submittals: Email address and ftp site will be provided at Preconstruction Meeting.
2. Hard Copy: Quantity Two
   Jacobs
   Attention: Stephen Kasle, Resident Engineer
   210 Municipal Road
   Waterbury, CT 06708

B. Electronic Submittals: Submittals shall, unless specifically accepted, be made in electronic format.

1. Each submittal shall be an electronic file in Adobe Acrobat portable document format (PDF). Use the latest version available at time of execution of the Contract.
2. Add general information to each PDF file, including title, subject, author, and keywords.
3. PDF files shall be set up to print legibly at 8-1/2-inch by 11-inch, 11-inch by 17-inch, or 22-inch by 36 inch. No other paper sizes will be accepted.
4. Submit new electronic files for each resubmittal.

©COPYRIGHT 2025 JACOBS

5. Include a copy of the Contractor's standard transmittal of submittal form.
6. Provide Engineer with authorization to reproduce and distribute each file as many times as necessary for Project documentation.
7. Detailed procedures for handling electronic submittals will be discussed at the preconstruction conference.

C. Transmittal of Submittal:

1. Contractor shall:
   a. Review each submittal and check for compliance with Contract Documents.
   b. Stamp each submittal with uniform approval stamp before submitting to Engineer.
      1) Stamp to include Project name, submittal number, Specification number, Contractor's reviewer name, date of Contractor's approval, and statement certifying submittal has been reviewed, checked, and approved for compliance with Contract Documents.
      2) Engineer will not review submittals that do not bear Contractor's approval stamp and will return them without action.
2. Complete, sign, and transmit with each submittal package, one Contractor's standard transmittal of submittal form.
3. Identify each submittal with the following:
   a. Numbering and Tracking System:
      1) Sequentially number each submittal.
      2) Resubmission of submittal shall have original number with sequential alphabetic suffix.
   b. Specification section and paragraph to which submittal applies.
   c. Project title and Engineer's project number.
   d. Date of transmittal.
   e. Names of Contractor, subcontractor or supplier, and manufacturer as appropriate.
4. Identify and describe each deviation or variation from Contract Documents.

D. Format:

1. Do not base shop drawings on reproductions of Contract Documents.
2. Package submittal information by individual specification section. Do not combine different specification sections together in submittal package, unless otherwise directed in specification.

©COPYRIGHT 2025 JACOBS

3. Present in a clear and thorough manner and in sufficient detail to show kind, size, arrangement, and function of components, materials, and devices, and compliance with Contract Documents.
4. Index with labeled tab dividers in orderly manner.

E. Timeliness: Schedule and submit in accordance Schedule of Submittals, and requirements of individual specification sections.

F. Processing Time:

1. Time for review shall commence on Engineer's receipt of submittal.
2. Engineer will act upon Contractor's submittal and transmit response to Contractor not later than 21 days after receipt, unless otherwise specified.
3. Resubmittals will be subject to same review time.
4. No adjustment of Contract Times or Price will be allowed as a result of delays in progress of Work caused by rejection and subsequent resubmittals.

G. Resubmittals: Clearly identify each correction or change made.

H. Incomplete Submittals:

1. Engineer will return entire submittal for Contractor's revision if preliminary review deems it incomplete.
2. When any of the following are missing, submittal will be deemed incomplete:
   a. Contractor's review stamp; completed and signed.
   b. Transmittal of Contractor's Submittal; completed and signed.
   c. Insufficient number of copies.

I. Submittals not required by Contract Documents:

1. Will not be reviewed and will be returned stamped "Not Subject to Review."
2. Engineer will keep one copy and return submittal to Contractor.

1.03 ACTION SUBMITTALS

A. Prepare and submit Action Submittals required by individual specification sections.

B. Shop Drawings:

1. Copies: One electronic and two hard copies.

©COPYRIGHT 2025 JACOBS

2. Identify and Indicate:
   a. Applicable Contract Drawing and Detail number, products, units and assemblies, and system or equipment identification or tag numbers.
   b. Equipment and Component Title: Identical to title shown on Drawings.
   c. Critical field dimensions and relationships to other critical features of Work. Note dimensions established by field measurement.
   d. Project-specific information drawn accurately to scale.
3. Manufacturer's standard schematic drawings and diagrams as follows:
   a. Modify to delete information that is not applicable to the Work.
   b. Supplement standard information to provide information specifically applicable to the Work.
4. Product Data: Provide as specified in individual specifications.
5. Deferred Submittal:
   a. Contractor-design drawings and product data related to permanent construction.
      1) Written and graphic information.
      2) Drawings.
      3) Cut sheets.
      4) Data sheets.
      5) Action item submittals requested in individual specification section.
   b. Prior to installation of indicated structural or nonstructural element, equipment, or component or its anchorage, submit required supporting data and drawings for review and acceptance by Engineer. Documentation of review and approval provided on Engineer's comment form, along with completed submittal, shall be filed with permitting agency by Contractor and approved by permitting agency prior to installation.

C. Samples:

1. Copies: Two, unless otherwise specified in individual specifications.
2. Preparation: Mount, display, or package Samples in manner specified to facilitate review of quality. Attach label on unexposed side that includes the following:
   a. Manufacturer name.
   b. Model number.
   c. Material.
   d. Sample source.
3. Manufacturer's Color Chart: Units or sections of units showing full range of colors, textures, and patterns available.

©COPYRIGHT 2025 JACOBS

4. Full-size Samples:
   a. Size as indicated in individual specification section.
   b. Prepared from same materials to be used for the Work.
   c. Cured and finished in manner specified.
   d. Physically identical with product proposed for use.

D. Action Submittal Dispositions: Engineer will review, comment, stamp, and distribute as noted:

1. Approved:
   a. Contractor may incorporate product(s) or implement Work covered by submittal.
   b. Distribution: Electronic.
2. Approved as Noted:
   a. Contractor may incorporate product(s) or implement Work covered by submittal, in accordance with Engineer's notations.
   b. Distribution: Electronic.
3. Partial Approval, Resubmit as Noted:
   a. Make corrections or obtain missing portions, and resubmit.
   b. Except for portions indicated, Contractor may begin to incorporate product(s) or implement Work covered by submittal, in accordance with Engineer's notations.
   c. Distribution: Electronic.
4. Revise and Resubmit:
   a. Contractor may not incorporate product(s) or implement Work covered by submittal.
   b. Distribution: Electronic.

1.04 INFORMATIONAL SUBMITTALS

A. General:

1. Copies: One electronic and two hard copies, unless otherwise indicated in individual specification section.
2. Refer to individual specification sections for specific submittal requirements.
3. Engineer will review each submittal. If submittal meets conditions of the Contract, Engineer will forward copy to appropriate parties. If Engineer determines submittal does not meet conditions of the Contract and is therefore considered unacceptable, Engineer will retain one copy and return remaining copy with review comments to Contractor, and require that submittal be corrected and resubmitted.

©COPYRIGHT 2025 JACOBS

B. Certificates:

1. General:
   a. Provide notarized statement that includes signature of entity responsible for preparing certification.
   b. Signed by officer or other individual authorized to sign documents on behalf of that entity.
2. Welding: In accordance with individual specification sections.
3. Installer: Prepare written statements on manufacturer's letterhead certifying installer complies with requirements as specified in individual specification section.
4. Material Test: Prepared by qualified testing agency, on testing agency's standard form, indicating and interpreting test results of material for compliance with requirements.
5. Certificates of Successful Testing or Inspection: Submit when testing or inspection is required by Laws and Regulations or governing agency or specified in individual specification sections.
6. Manufacturer's Certificate of Compliance: In accordance with Section 01 43 33, Manufacturers' Field Services.
7. Manufacturer's Certificate of Proper Installation: In accordance with Section 01 43 33, Manufacturers' Field Services.

C. Closeout Submittals: In accordance with Section 01 77 00, Closeout Procedures.

D. Contractor-design Data (related to temporary construction):

1. Written and graphic information.
2. List of assumptions.
3. List of performance and design criteria.
4. Summary of loads or load diagram, if applicable.
5. Calculations.
6. List of applicable codes and regulations.
7. Name and version of software.
8. Information requested in individual specification section.

E. Deferred Submittals:

1. Contractor-design data related to permanent construction:
   a. List of assumptions.
   b. List of performance and design criteria.
   c. Summary of loads or load diagram, if applicable.
   d. Calculations.
   e. List of applicable codes and regulations.
   f. Name and version of design software.

©COPYRIGHT 2025 JACOBS

g. Factory test results.
h. Informational submittals requested in individual specification section.

2. Prior to installation of indicated structural or nonstructural element, equipment, or component or its anchorage, submit calculations and test results of Contractor-designed components for review by Engineer. Documentation of review and indication of compliance with general design intent and project criteria provided on Engineer's comment form as meets conditions of the Contract, along with completed submittal, shall be filed with permitting agency by Contractor and approved by permitting agency prior to installation.

F. Manufacturer's Instructions: Written or published information that documents manufacturer's recommendations, guidelines, and procedures in accordance with individual specification section.

G. Operation and Maintenance Data: As required in Section 01 78 23, Operation and Maintenance Data.

H. Payment:

1. Application for Payment: In accordance with Section 01 29 00, Payment Procedures.
2. Schedule of Values: In accordance with Section 01 29 00, Payment Procedures.

I. Special Guarantee: Supplier's written guarantee as required in individual specification sections.

J. Statement of Qualification: Evidence of qualification, certification, or registration as required in Contract Documents to verify qualifications of professional land surveyor, engineer, materials testing laboratory, specialty subcontractor, trade, specialist, consultant, installer, and other professionals.

K. Submittals Required by Laws, Regulations, and Governing Agencies:

1. Promptly submit promptly notifications, reports, certifications, payrolls, and otherwise as may be required, directly to the applicable federal, state, or local governing agency or their representative.
2. Transmit to Engineer for Owner's records one copy of correspondence and transmittals (to include enclosures and attachments) between Contractor and governing agency.

©COPYRIGHT 2025 JACOBS

L. Test, Evaluation, and Inspection Reports:

1. General: Shall contain signature of person responsible for test or report.
2. Factory:
   a. Identification of product and specification section, type of inspection or test with referenced standard or code.
   b. Date of test, Project title and number, and name and signature of authorized person.
   c. Test results.
   d. If test or inspection deems material or equipment not in compliance with Contract Documents, identify corrective action necessary to bring into compliance.
   e. Provide interpretation of test results, when requested by Engineer.
   f. Other items as identified in individual specification sections.
3. Field:
   a. As a minimum, include the following:
      1) Project title and number.
      2) Date and time.
      3) Record of temperature and weather conditions.
      4) Identification of product and specification section.
      5) Type and location of test, sample, or inspection, including referenced standard or code.
      6) Date issued, testing laboratory name, address, and telephone number, and name and signature of laboratory inspector.
      7) If test or inspection deems material or equipment not in compliance with Contract Documents, identify corrective action necessary to bring into compliance.
      8) Provide interpretation of test results, when requested by Engineer.
      9) Other items as identified in individual specification sections.

M. Training Data: Not Used

PART 2 PRODUCTS (NOT USED)

PART 3 EXECUTION (NOT USED)

END OF SECTION

©COPYRIGHT 2025 JACOBS

SECTION 01 42 13
ABBREVIATIONS AND ACRONYMS

PART 1 GENERAL

1.01 REFERENCE TO STANDARDS AND SPECIFICATIONS OF TECHNICAL SOCIETIES

A. Reference to standards and specifications of technical societies and reporting and resolving discrepancies associated therewith shall be as provided in Article 12 of the General Conditions, and as may otherwise be required herein and in the individual Specification sections.

B. Work specified by reference to published standard or specification of government agency, technical association, trade association, professional society or institute, testing agency, or other organization shall meet requirements or surpass minimum standards of quality for materials and workmanship established by designated standard or specification.

C. Where so specified, products or workmanship shall also meet or exceed additional prescriptive or performance requirements included within Contract Documents to establish a higher or more stringent standard of quality than required by referenced standard.

D. Where two or more standards are specified to establish quality, product and workmanship shall meet or exceed requirements of most stringent.

E. Where both a standard and a brand name are specified for a product in Contract Documents, proprietary product named shall meet or exceed requirements of specified reference standard.

F. Copies of standards and specifications of technical societies:

1. Copies of applicable referenced standards have not been bound in these Contract Documents.
2. Where copies of standards are needed by Contractor, obtain a copy or copies directly from publication source and maintain in an orderly manner at the Site as Work Site records, available to Contractor’s personnel, subcontractors, Owner, and Engineer.

©COPYRIGHT 2025 JACOBS

1.02 ABBREVIATIONS

A. Abbreviations for trade organizations and government agencies: Following is a list of construction industry organizations and government agencies to which references may be made in the Contract Documents, with abbreviations used.

1.	AA	Aluminum Association
2.	AABC	Associated Air Balance Council
3.	AAMA	American Architectural Manufacturers Association
4.	AASHTO	American Association of State Highway and Transportation Officials
5.	ABMA	American Bearing Manufacturers' Association
6.	ACI	American Concrete Institute
7.	AEIC	Association of Edison Illuminating Companies
8.	AGA	American Gas Association
9.	AGMA	American Gear Manufacturers' Association
10.	AI	Asphalt Institute
11.	AISC	American Institute of Steel Construction
12.	AISI	American Iron and Steel Institute
13.	AITC	American Institute of Timber Construction
14.	ALS	American Lumber Standards
15.	AMCA	Air Movement and Control Association
16.	ANSI	American National Standards Institute
17.	APA	APA – The Engineered Wood Association
18.	API	American Petroleum Institute
19.	APWA	American Public Works Association
20.	AHRI	Air-Conditioning, Heating, and Refrigeration Institute
21.	ASA	Acoustical Society of America
22.	ASABE	American Society of Agricultural and Biological Engineers
23.	ASCE	American Society of Civil Engineers
24.	ASHRAE	American Society of Heating, Refrigerating and Air-Conditioning Engineers, Inc.
25.	ASME	American Society of Mechanical Engineers
26.	ASNT	American Society for Nondestructive Testing
27.	ASSE	American Society of Sanitary Engineering
28.	ASTM	ASTM International
29.	AWI	Architectural Woodwork Institute
30.	AWPA	American Wood Preservers' Association
31.	AWPI	American Wood Preservers' Institute
32.	AWS	American Welding Society
33.	AWWA	American Water Works Association

©COPYRIGHT 2025 JACOBS

34.	BHMA	Builders Hardware Manufacturers' Association
35.	CBM	Certified Ballast Manufacturer
36.	CDA	Copper Development Association
37.	CGA	Compressed Gas Association
38.	CISPI	Cast Iron Soil Pipe Institute
39.	CMAA	Crane Manufacturers' Association of America
40.	CRSI	Concrete Reinforcing Steel Institute
41.	CS	Commercial Standard
42.	CSA	Canadian Standards Association
43.	CSI	Construction Specifications Institute
44.	DIN	Deutsches Institut für Normung e.V.
45.	DIPRA	Ductile Iron Pipe Research Association
46.	EIA	Electronic Industries Alliance
47.	EJCDC	Engineers Joint Contract Documents' Committee
48.	ETL	Electrical Test Laboratories
49.	FAA	Federal Aviation Administration
50.	FCC	Federal Communications Commission
51.	FDA	Food and Drug Administration
52.	FEMA	Federal Emergency Management Agency
53.	FIPS	Federal Information Processing Standards
54.	FM	FM Global
55.	Fed. Spec.	Federal Specifications (FAA Specifications)
56.	FS	Federal Specifications and Standards (Technical Specifications)
57.	GA	Gypsum Association
58.	GANA	Glass Association of North America
59.	HI	Hydraulic Institute
60.	HMI	Hoist Manufacturers' Institute
61.	IBC	International Building Code
62.	ICBO	International Conference of Building Officials
63.	ICC	International Code Council
64.	ICEA	Insulated Cable Engineers' Association
65.	IFC	International Fire Code
66.	IEEE	Institute of Electrical and Electronics Engineers, Inc.
67.	IESNA	Illuminating Engineering Society of North America
68.	IFI	Industrial Fasteners Institute
69.	IGMA	Insulating Glass Manufacturer's Alliance
70.	IMC	International Mechanical Code
71.	INDA	Association of the Nonwoven Fabrics Industry
72.	IPC	International Plumbing Code
73.	ISA	International Society of Automation

©COPYRIGHT 2025 JACOBS

74.	ISO	International Organization for Standardization
75.	ITL	Independent Testing Laboratory
76.	JIC	Joint Industry Conferences of Hydraulic Manufacturers
77.	MIA	Marble Institute of America
78.	MIL	Military Specifications
79.	MMA	Monorail Manufacturers' Association
80.	MSS	Manufacturer's Standardization Society
81.	NAAMM	National Association of Architectural Metal Manufacturers
82.	NACE	NACE International
83.	NBGQA	National Building Granite Quarries Association
84.	NEBB	National Environmental Balancing Bureau
85.	NEC	National Electrical Code
86.	NECA	National Electrical Contractor's Association
87.	NEMA	National Electrical Manufacturers' Association
88.	NESC	National Electrical Safety Code
89.	NETA	InterNational Electrical Testing Association
90.	NFPA	National Fire Protection Association
91.	NHLA	National Hardwood Lumber Association
92.	NICET	National Institute for Certification in Engineering Technologies
93.	NIST	National Institute of Standards and Technology
94.	NRCA	National Roofing Contractors Association
95.	NRTL	Nationally Recognized Testing Laboratories
96.	NSF	NSF International
97.	NSPE	National Society of Professional Engineers
98.	NTMA	National Terrazzo and Mosaic Association
99.	NWWDA	National Wood Window and Door Association
100.	OSHA	Occupational Safety and Health Act (both Federal and State)
101.	PCI	Precast/Prestressed Concrete Institute
102.	PEI	Porcelain Enamel Institute
103.	PPI	Plastic Pipe Institute
104.	PS	Product Standards Section-U.S. Department of Commerce
105.	RMA	Rubber Manufacturers' Association
106.	RUS	Rural Utilities Service
107.	SAE	SAE International
108.	SDI	Steel Deck Institute
109.	SDI	Steel Door Institute
110.	SJI	Steel Joist Institute
111.	SMACNA	Sheet Metal and Air Conditioning Contractors National Association

©COPYRIGHT 2025 JACOBS

112.	SPI	Society of the Plastics Industry
113.	SSPC	The Society for Protective Coatings
114.	STI/SPFA	Steel Tank Institute/Steel Plate Fabricators Association
115.	SWI	Steel Window Institute
116.	TEMA	Tubular Exchanger Manufacturers' Association
117.	TCA	Tile Council of North America
118.	TIA	Telecommunications Industry Association
119.	UBC	Uniform Building Code
120.	UFC	Uniform Fire Code
121.	UL	Underwriters Laboratories Inc.
122.	UMC	Uniform Mechanical Code
123.	USBR	U.S. Bureau of Reclamation
124.	WCLIB	West Coast Lumber Inspection Bureau
125.	WI	Wood Institute
126.	WWPA	Western Wood Products Association

PART 2 PRODUCTS (NOT USED)

PART 3 EXECUTION (NOT USED)

END OF SECTION

©COPYRIGHT 2025 JACOBS

SECTION 01 45 16.13
CONTRACTOR QUALITY CONTROL

PART 1 GENERAL

1.01 REFERENCES

A. The following is a list of standards which may be referenced in this section:

1. ASTM International (ASTM):
   a. D3740, Evaluation of Agencies Engaged in the Testing and/or Inspection of Soil and Rock as Used in Engineering Design and Construction.
   b. E329, Use in the Evaluation of Testing and Inspection Agencies as Used in Construction.

1.02 DEFINITIONS

A. Contractor Quality Control (CQC): The means by which Contractor ensures that the construction, to include that performed by subcontractors and suppliers, complies with the requirements of the Contract.

1.03 SUBMITTALS

A. Informational Submittals:

1. CQC Plan: Submit, not later than 30 days after receipt of Notice to Proceed.
2. CQC Report: Submit, weekly, an original and one copy in report form.

1.04 OWNER'S QUALITY ASSURANCE

A. All Work is subject to Owner's quality assurance inspection and testing at all locations and at all reasonable times before acceptance to ensure strict compliance with the terms of the Contract Documents.

B. Owner's quality assurance inspections and tests are for the sole benefit of Owner and do not:

1. Relieve Contractor of responsibility for providing adequate quality control measures;
2. Relieve Contractor of responsibility for damage to or loss of the material before acceptance;
3. Constitute or imply acceptance; or

©COPYRIGHT 2025 JACOBS

4. Affect the continuing rights of Owner after acceptance of the completed Work.

C. The presence or absence of a quality assurance inspector does not relieve Contractor from any Contract requirement.

D. Promptly furnish all facilities, labor, and material reasonably needed for performing such safe and convenient inspections and tests as may be required by Engineer.

E. Owner may charge Contractor for any additional cost of inspection or test when Work is not ready at the time specified by Contractor for inspection or test, or when prior rejection makes re-inspection or retest necessary. Quality assurance inspections and tests will be performed in a manner that will not unnecessarily delay the Work.

PART 2 PRODUCTS (NOT USED)

PART 3 EXECUTION

3.01 GENERAL

A. Maintain an adequate inspection system and perform such inspections as will ensure that the Work conforms to the Contract Documents.

B. Maintain complete inspection records and make them available at all times to Owner and Engineer.

C. The quality control system shall consist of plans, procedures, and organization necessary to produce an end product that complies with the Contract Documents. The system shall cover all construction and demolition operations, both onsite and offsite, including Work by subcontractors, fabricators, suppliers and purchasing agents, and shall be keyed to the proposed construction sequence.

3.02 COORDINATION MEETING

A. After the Preconstruction Conference, but before start of construction, and prior to acceptance of the CQC Plan, schedule a meeting with Engineer and Owner to discuss the quality control system.

B. Develop a mutual understanding of the system details, including the forms for recording the CQC operations, control activities, testing, administration of the system for both onsite and offsite Work, and the interrelationship of Contractor’s management and control with the Owner’s Quality Assurance.

©COPYRIGHT 2025 JACOBS

C. There may be occasions when subsequent conferences may be called by either party to reconfirm mutual understandings and/or address deficiencies in the CQC system or procedures that may require corrective action by Contractor.

3.03 QUALITY CONTROL ORGANIZATION

A. CQC System Manager:

1. Designate an individual within Contractor's organization who will be responsible for overall management of CQC and have the authority to act in CQC matters for the Contractor.
2. CQC System Manager may not perform other duties on the Project.
3. CQC System Manager shall be an experienced construction person, with a minimum of 3 years construction experience on similar type Work.
4. CQC System Manager shall report to the Contractor's project manager or someone higher in the organization. Project manager in this context shall mean the individual with responsibility for the overall quality and production management of the Project.
5. CQC System Manager shall be onsite during construction; periods of absence may not exceed 2 weeks at any one time.
6. Identify an alternate for CQC System Manager to serve with full authority during the System Manager's absence. The requirements for the alternate will be the same as for designated CQC System Manager.

B. CQC Staff:

1. Designate a CQC staff, available at the Site at all times during progress, with complete authority to take any action necessary to ensure compliance with the Contract. CQC staff members shall be subject to acceptance by Engineer.
2. CQC staff shall take direction from CQC System Manager in matters pertaining to QC.
3. CQC staff must be of sufficient size to ensure adequate QC coverage of Work phases, work shifts, and work crews involved in the construction. These personnel may perform other duties, but must be fully qualified by experience and technical training to perform their assigned QC responsibilities and must be allowed sufficient time to carry out these responsibilities.
4. The actual strength of the CQC staff may vary during any specific Work period to cover the needs of the Project. Add additional staff when necessary for a proper CQC organization.

©COPYRIGHT 2025 JACOBS

C. Organizational Changes: Obtain Engineer's acceptance before replacing any member of the CQC staff. Requests for changes shall include name, qualifications, duties, and responsibilities of the proposed replacement.

3.04 QUALITY CONTROL PHASING

A. CQC shall include at least three phases of control to be conducted by CQC System Manager for all definable features of Work, as follows:

1. Preparatory Phase:
   a. Notify Owner at least 48 hours in advance of beginning any of the required action of the preparatory phase.
   b. This phase shall include a meeting conducted by the CQC System Manager and attended by the superintendent, other CQC personnel (as applicable), and the foreman responsible for the definable feature. The CQC System Manager shall instruct applicable CQC staff as to the acceptable level of workmanship required in order to meet Contract requirements.
   c. Document the results of the preparatory phase meeting by separate minutes prepared by the CQC System Manager and attached to the QC report.
   d. Perform prior to beginning Work on each definable feature of Work:
      1) Review applicable Contract Specifications.
      2) Review applicable Contract Drawings.
      3) Verify that all materials and/or equipment have been tested, submitted, and approved.
      4) Verify that provisions have been made to provide required control inspection and testing.
      5) Examine the Work area to verify that all required preliminary Work has been completed and is in compliance with the Contract.
      6) Perform a physical examination of required materials, equipment, and sample Work to verify that they are on hand, conform to approved Shop Drawing or submitted data, and are properly stored.
      7) Review the appropriate activity hazard analysis to verify safety requirements are met.
      8) Review procedures for constructing the Work, including repetitive deficiencies.
      9) Document construction tolerances and workmanship standards for that phase of the Work.
      10) Check to verify that the plan for the Work to be performed, if so required, has been accepted by Engineer.

©COPYRIGHT 2025 JACOBS

2. Initial Phase:
   a. Accomplish at the beginning of a definable feature of Work:
      1) Notify Owner at least 48 hours in advance of beginning the initial phase.
      2) Perform prior to beginning Work on each definable feature of Work:
         a) Review minutes of the preparatory meeting.
         b) Check preliminary Work to verify compliance with Contract requirements.
         c) Verify required control inspection and testing.
         d) Establish level of workmanship and verify that it meets minimum acceptable workmanship standards. Comparison with sample panels is appropriate.
         e) Resolve all differences.
         f) Check safety to include compliance with and upgrading of the safety plan and activity hazard analysis. Review the activity analysis with each worker.
      3) Separate minutes of this phase shall be prepared by the CQC System Manager and attached to the QC report. Exact location of initial phase shall be indicated for future reference and comparison with follow-up phases.
      4) The initial phase should be repeated for each new crew to work onsite, or any time acceptable specified quality standards are not being met.
3. Follow-up Phase:
   a. Perform daily checks to verify continuing compliance with Contract requirements, including control testing, until completion of the particular feature of Work.
   b. Daily checks shall be made a matter of record in the CQC documentation and shall document specific results of inspections for all features of Work for the day or shift.
   c. Conduct final follow-up checks and correct all deficiencies prior to the start of additional features of Work that will be affected by the deficient Work. Constructing upon or concealing nonconforming Work will not be allowed.
4. Additional Preparatory and Initial Phases: Additional preparatory and initial phases may be conducted on the same definable features of Work as determined by Owner if the quality of ongoing Work is unacceptable; or if there are changes in the applicable QC staff or in the onsite production supervision or work crew; or if work on a definable feature is resumed after a substantial period of inactivity, or if other problems develop.

©COPYRIGHT 2025 JACOBS

3.05 CONTRACTOR QUALITY CONTROL PLAN

A. General:

1. Plan shall identify personnel, procedures, control, instructions, test, records, and forms to be used.
2. An interim plan for the first 30 days of operation will be considered.
3. Construction will be permitted to begin only after acceptance of the CQC Plan or acceptance of an interim plan applicable to the particular feature of Work to be started.
4. Work outside of the features of Work included in an accepted interim plan will not be permitted to begin until acceptance of a CQC Plan or another interim plan containing the additional features of Work to be started.

B. Content:

1. Plan shall cover the intended CQC organization for the entire Contract and shall include the following, as a minimum:
   a. Organization: Description of the quality control organization, including a chart showing lines of authority and acknowledgment that the CQC staff will implement the three-phase control system (see Paragraph QC Phasing) for all aspects of the Work specified.
   b. CQC Staff: The name, qualifications (in resume format), duties, responsibilities, and authorities of each person assigned a QC function.
   c. Letters of Authority: A copy of a letter to the CQC System Manager signed by an authorized official of the firm, describing the responsibilities and delegating sufficient authorities to adequately perform the functions of the CQC System Manager, including authority to stop Work which is not in compliance with the Contract. The CQC System Manager shall issue letters of direction to all other various quality control representatives outlining duties, authorities and responsibilities. Copies of these letters will also be furnished to Owner.
   d. Submittals: Procedures for scheduling, reviewing, certifying, and managing submittals, including those of subcontractors, offsite fabricators, suppliers and purchasing agents.
   e. Testing: Control, verification and acceptance testing procedures for each specific test to include the test name, frequency, specification paragraph containing the test requirements, the personnel and laboratory responsible for each type of test, and an estimate of the number of tests required.

©COPYRIGHT 2025 JACOBS

f. Procedures for tracking preparatory, initial, and follow-up control phases and control, verification, and acceptance tests, including documentation.
g. Procedures for tracking deficiencies from identification through acceptable corrective action. These procedures will establish verification that identified deficiencies have been corrected.
h. Reporting procedures, including proposed reporting formats; include a copy of the CQC report form.

C. Acceptance of Plans: Acceptance of the Contractor's basic and addendum CQC plans is required prior to the start of construction. Acceptance is conditional and will be predicated on satisfactory performance during the construction. Owner reserves the right to require Contractor to make changes in the CQC plan and operations including removal of personnel, as necessary, to obtain the quality specified.

D. Notification of Changes: After acceptance of the CQC plan, Contractor shall notify Engineer, in writing, a minimum of 7 calendar days prior to any proposed change. Proposed changes are subject to acceptance by Engineer.

3.06 CONTRACTOR QUALITY CONTROL REPORT

A. As a minimum, prepare a CQC report for every 7 calendar days. Account for all days throughout the life of the Contract. Reports shall be signed and dated by CQC System Manager. Include copies of test reports and copies of reports prepared by QC staff.

B. Maintain current records of quality control operations, activities, and tests performed, including the Work of subcontractors and suppliers.

C. Records shall be on an acceptable form and shall be a complete description of inspections, the results of inspections, daily activities, tests, and other items, including but not limited to the following:

1. Contractor/subcontractor and their areas of responsibility.
2. Operating plant/equipment with hours worked, idle, or down for repair.
3. Work performed today, giving location, description, and by whom. When a network schedule is used, identify each phase of Work performed each day by activity number.
4. Test and/or control activities performed with results and references to specifications/plan requirements. The control phase should be identified (Preparatory, Initial, Follow-up). List deficiencies noted along with corrective action.
5. Material received with statement as to its acceptability and storage.

©COPYRIGHT 2025 JACOBS

6. Identify submittals reviewed, with Contract reference, by whom, and action taken.
7. Offsite surveillance activities, including actions taken.
8. Job safety evaluations stating what was checked, results, and instructions or corrective actions.
9. List instructions given/received and conflicts in Drawings and/or Specifications.
10. Contractor's verification statement.
11. Indicate a description of trades working on the Project; the number of personnel working; weather conditions encountered; and any delays encountered.
12. These records shall cover both conforming and deficient features and shall include a statement that equipment and materials incorporated in file work and workmanship comply with the Contract.

3.07 SUBMITTAL QUALITY CONTROL

A. Submittals shall be as specified in Section 01 33 00, Submittal Procedures. The CQC organization shall be responsible for certifying that all submittals are in compliance with the Contract requirements. Owner will furnish copies of test report forms upon request by Contractor. Contractor may use other forms as approved.

3.08 TESTING QUALITY CONTROL

A. Testing Procedure:

1. Perform tests specified or required to verify that control measures are adequate to provide a product which conforms to Contract requirements. Procure services of a licensed testing laboratory. Perform the following activities and record the following data:
    a. Verify testing procedures comply with contract requirements.
    b. Verify facilities and testing equipment are available and comply with testing standards.
    c. Check test instrument calibration data against certified standards.
    d. Verify recording forms and test identification control number system, including all of the test documentation requirements, have been prepared.
    e. Documentation:
        1) Record results of all tests taken, both passing and failing, on the CQC report for the date taken.
        2) Include specification paragraph reference, location where tests were taken, and the sequential control number identifying the test.

©COPYRIGHT 2025 JACOBS

3) Actual test reports may be submitted later, if approved by Engineer, with a reference to the test number and date taken.
4) Provide directly to Engineer an information copy of tests performed by an offsite or commercial test facility. Test results shall be signed by an engineer registered in the state where the tests are performed.
5) Failure to submit timely test reports, as stated, may result in nonpayment for related Work performed and disapproval of the test facility for this Contract.

B. Testing Laboratories: Laboratory facilities, including personnel and equipment, utilized for testing soils, concrete, asphalt and steel shall meet criteria detailed in ASTM D3740 and ASTM E329, and be accredited by the American Association of Laboratory Accreditation (AALA), National Institute of Standards and Technology (NIST), National Voluntary Laboratory Accreditation Program (NVLAP), the American Association of State Highway and Transportation Officials (AASHTO), or other approved national accreditation authority. Personnel performing concrete testing shall be certified by the American Concrete Institute (ACI).

3.09 COMPLETION INSPECTION

A. CQC System Manager shall conduct an inspection of the Work at the completion of all Work or any milestone established by a completion time stated in the Contract.

B. Punchlist:

1. CQC System Manager shall develop a punchlist of items which do not conform to the Contract requirements.
2. Include punchlist in the CQC report, indicating the estimated date by which the deficiencies will be corrected.
3. CQC System Manager or staff shall make a second inspection to ascertain that all deficiencies have been corrected and so notify the Owner.
4. These inspections and any deficiency corrections required will be accomplished within the time stated for completion of the entire Work or any particular increment thereof if the Project is divided into increments by separate completion dates.

END OF SECTION

©COPYRIGHT 2025 JACOBS

SECTION 01 50 00
TEMPORARY FACILITIES AND CONTROLS

PART 1 GENERAL

1.01 REFERENCES

A. The following is a list of standards which may be referenced in this section:

1. American Association of Nurserymen (AAN): American Standards for Nursery Stock.
2. Federal Emergency Management Agency (FEMA).
3. National Fire Prevention Association (NFPA): 241, Standard for Safeguarding Construction, Alteration, and Demolition Operations.
4. Telecommunications Industry Association (TIA); Electronic Industries Alliance (EIA): 568B, Commercial Building Telecommunications Cabling Standard.
5. U.S. Department of Agriculture (USDA): Urban Hydrology for Small Watersheds.
6. U.S. Weather Bureau: Rainfall-Frequency Atlas of the U.S. for Durations from 30 Minutes to 24 Hours and Return Periods from 1 to 100 Years.

1.02 SUBMITTALS

A. Informational Submittals:

1. Copies of permits and approvals for construction as required by Laws and Regulations and governing agencies.
2. Temporary Utility Submittals:
   a. Sanitary
3. Temporary Construction Submittals:
   a. Parking area plans.
   b. Contractor’s storage area.
   c. Fencing and protective barrier locations and details.
   d. Staging area location plan.
   e. Plan for maintenance of sanitary sewer facilities.

©COPYRIGHT 2026 JACOBS

1.03 MOBILIZATION

A. Mobilization includes, but is not limited to, these principal items:

1. Obtaining required permits.
2. Moving Contractor's equipment required for initial operations onto Site.
3. Installing temporary construction power, wiring, and lighting facilities as necessary.
4. Providing onsite sanitary facilities and potable water facilities as specified and as required by Laws and Regulations, and governing agencies.
5. Arranging for and erection of Contractor's work and storage yard.
6. Posting OSHA required notices and establishing safety programs and procedures.
7. Having Contractor's superintendent at Site full time.

B. Use area designated for Contractor's temporary facilities as shown on Drawings.

1.04 PROTECTION OF WORK AND PROPERTY

A. Comply with Owner's safety rules while on Owner's property.

B. Keep Owner informed of serious onsite accidents and related claims.

C. Use of Explosives: No blasting or use of explosives will be allowed onsite.

PART 2 PRODUCTS

2.01 PROJECT SIGN – NOT USED

PART 3 EXECUTION

3.01 TEMPORARY UTILITIES

A. Power: Provide a generator to power electric tools as necessary for the Work in accordance with applicable safety requirements.

B. Lighting: Provide temporary lighting to meet applicable safety requirements to allow erection, application, or installation of materials and equipment, and observation or inspection of the Work.

C. Water: No construction or potable water is available at Site. Make arrangements for and bear costs of providing water required for construction purposes and for drinking by construction personnel during construction.

©COPYRIGHT 2026 JACOBS

D. Sanitary and Personnel Facilities: Provide and maintain facilities for Contractor's employees, Subcontractors, and other onsite employers' employees. Service, clean, and maintain facilities and enclosures.

E. Fire Protection: Furnish and maintain on Site adequate firefighting equipment capable of extinguishing incipient fires. Comply with applicable parts of NFPA 241.

3.02 PROTECTION OF WORK AND PROPERTY

A. General:

1. Perform Work within right-of-way and easements in a systematic manner that minimizes inconvenience to property owners and the public.
2. No residence or business shall be cut off from vehicular traffic for a period exceeding 1 hour, unless special arrangements have been made.
3. Maintain in continuous service existing oil and gas pipelines, underground power, telephone or communication cable, water mains, irrigation lines, sewers, poles and overhead power, and other utilities encountered along line of the Work, unless other arrangements satisfactory to owners of said utilities have been made.
4. Where completion of the Work requires temporary or permanent removal or relocation of existing utility, coordinate activities with owner of said utility and perform work to their satisfaction.
5. Protect, shore, brace, support, and maintain underground pipes, conduits, drains, and other underground utility construction uncovered or otherwise affected by construction operations.
6. Keep fire hydrants and water control valves free from obstruction and available for use at all times.
7. In areas where Contractor's operations are adjacent to or near a utility, such as gas, telephone, television, electric power, water, sewer, or irrigation system, and such operations may cause damage or inconvenience, suspend operations until arrangements necessary for protection have been made by Contractor.
8. Notify property owners and utility offices that may be affected by construction operation at least 2 days in advance: Before exposing a utility, obtain utility owner's permission. Should service of utility be interrupted due to Contractor's operation, notify proper authority immediately. Cooperate with said authority in restoring service as promptly as possible and bear costs incurred.
9. Do not impair operation of existing sewer system. Prevent construction material, pavement, concrete, earth, volatile and corrosive wastes, and

©COPYRIGHT 2026 JACOBS

other debris from entering sewers, pump stations, or other sewer structures.

10. Maintain original Site drainage wherever possible.

B. Site Security: Not Used

C. Signs and Equipment:

1. Conform to requirements of manual published by the State Department of Transportation.
2. Provide at obstructions, such as material piles and equipment.
3. Use to alert general public of construction hazards, which would include surface irregularities, unramped walkways, grade changes, and trenches or excavations in roadways and in other public access areas.

D. Trees and Plantings:

1. Protect from damage and preserve trees, shrubs, and other plants outside limits of the Work and within limits of the Work, which are designated on Drawings to remain undisturbed.
    a. Where practical, tunnel beneath trees when on or near line of trench.
    b. Employ hand excavation as necessary to prevent tree injury.
    c. Do not stockpile materials or permit traffic within drip lines of trees.
    d. Provide and maintain temporary barricades around trees.
    e. Water vegetation as necessary to maintain health.
    f. Cover temporarily exposed roots with wet burlap, and keep burlap moist until soil is replaced around roots.
    g. No trees, except those specifically shown on Drawings to be removed, shall be removed without written approval of Engineer.
    h. Dispose of removed trees in a legal manner off the Site.
2. Balling and burlapping of trees indicated for replacement shall conform to recommended specifications set forth in the American Standards for Nursery Stock, published by American Association of Nurserymen. Balls shall be firm and intact and made-balls will not be accepted. Handle ball and burlap trees by ball and not by top.
3. In event of damage to bark, trunks, limbs, or roots of plants that are not designated for removal, treat damage by corrective pruning, bark tracing, application of a heavy coating of tree paint, and other accepted horticultural and tree surgery practices.
4. Replace each plant that dies as a result of construction activities.

E. Existing Structures:

©COPYRIGHT 2026 JACOBS

1. Where Contractor contemplates removal of small structures such as mailboxes, signposts, and culverts that interfere with Contractor's operations, obtain approval of property owner and Engineer.
2. Move mailboxes to temporary locations accessible to postal service.
3. Replace items removed in their original location and a condition equal to or better than original.

F. Finished Construction: Not Used

G. Waterways: Keep ditches, culverts, and natural drainages continuously free of construction materials and debris.

H. Dewatering: Construct, maintain, and operate cofferdams, channels, flume drains, sumps, pumps, or other temporary diversion and protection works. Furnish materials required, install, maintain, and operate necessary pumping and other equipment for the environmentally safe removal and disposal of water from the various parts of the Work. Maintain foundations and parts of the Work free from water.

I. Endangered and Threatened Species:

1. Take precautions necessary and prudent to protect native endangered and threatened flora and fauna.
2. Notify Engineer of construction activities that might threaten endangered and threatened species or their habitats.
3. Engineer will mark areas known as habitats of endangered and threatened species prior to commencement of onsite activities.
4. Additional areas will be marked by Engineer as other habitats of endangered and threatened species become known during construction.

3.03 TEMPORARY CONTROLS

A. Air Pollution Control:

1. Minimize air pollution from construction operations.
2. Burning of waste materials, rubbish, or other debris will not be permitted on or adjacent to Site.
3. Conduct operations of dumping rock and of carrying rock away in trucks to cause a minimum of dust. Give unpaved streets, roads, detours, or haul roads used in construction area a dust-preventive treatment or periodically water to prevent dust. Strictly adhere to applicable environmental regulations for dust prevention.
4. Provide and maintain temporary dust-tight partitions, bulkheads, or other protective devices during construction to permit normal operation of existing facilities. Construct partitions of plywood, insulating board, plastic sheets, or similar material. Construct partitions in such a manner

©COPYRIGHT 2026 JACOBS

that dust and dirt from demolition and cutting will not enter other parts of existing building or facilities. Remove temporary partitions as soon as need no longer exists.

B. Noise Control:

1. Provide acoustical barriers so noise emanating from tools or equipment will not exceed legal noise levels.
2. In accordance with City of Waterbury Noise Control Ordinance: Residential Day: 55dBA, Residential Night: 45 dBA.
3. Noise Control Plan: Propose plan to mitigate construction noise and to comply with noise control ordinances, including method of construction, equipment to be used, and acoustical treatments.

C. Water Pollution Control:

1. Divert sanitary sewage and nonstorm waste flow interfering with construction and requiring diversion to sanitary sewers. Do not cause or permit action to occur which would cause an overflow to existing waterway.
2. Prior to commencing excavation and construction, obtain Engineer's agreement with detailed plans showing procedures intended to handle and dispose of sewage, groundwater, and dewatering pump discharges.
3. Comply with Section 01 57 13, Temporary Erosion and Sedimentation Control, for stormwater flow and surface runoff.
4. Do not dispose of volatile wastes such as mineral spirits, oil, chemicals, or paint thinner in storm or sanitary drains. Disposal of wastes into streams or waterways is prohibited. Provide acceptable containers for collection and disposal of waste materials, debris, and rubbish.

D. Erosion, Sediment, and Flood Control: Provide, maintain, and operate temporary facilities as shown on Drawings, to control erosion and sediment releases, and to protect the Work and existing facilities from flooding during construction period.

3.04 STORAGE YARDS AND BUILDINGS

A. Coordinate requirements with Section 01 61 00, Common Product Requirements.

B. Temporary Storage Yards: Construct temporary storage yards for storage of products that are not subject to damage by weather conditions.

C. Temporary Storage Buildings: Not Used

©COPYRIGHT 2026 JACOBS

3.05 PARKING AREAS

A. Control vehicular parking to preclude interference with public traffic or parking, access by emergency vehicles, Owner's operations, or construction operations.

B. Provide parking facilities for personnel working on Project. No employee or equipment parking will be permitted on Owner's or property owner's existing paved areas and driveways, except as specifically designated for Contractor's use.

3.06 VEHICULAR TRAFFIC

A. Adhere to Sheets C-017 and C-018 in Contract Drawings.

B. Comply with Laws and Regulations regarding closing or restricting use of public streets or highways. No public or private road shall be closed, except by written permission of proper authority. Ensure the least possible obstruction to traffic and normal commercial pursuits.

C. Conduct the Work to interfere as little as possible with public travel, whether vehicular or pedestrian.

D. Whenever it is necessary to cross, close, or obstruct roads, driveways, and walks, whether public or private, provide and maintain suitable and safe bridges, detours, or other temporary expedients for accommodation of public and private travel.

E. Road Closures: Contractor shall maintain one lane of alternating traffic within work areas during working hours in accordance with local and State standards. Two-way traffic shall be restored within work areas at the end of each work day.

F. In making street crossings, do not block more than one-half the street at a time. Whenever possible, widen shoulder on opposite side to facilitate traffic flow. Provide temporary surfacing on shoulders as necessary.

G. Maintain top of backfilled trenches before they are paved, to allow normal vehicular traffic to pass over. Provide temporary access driveways where required. Cleanup operations shall follow immediately behind backfilling.

H. When flaggers and guards are required by regulation or when deemed necessary for safety, furnish them with approved orange wearing apparel and other regulation traffic control devices.

©COPYRIGHT 2026 JACOBS

I. Notify fire department and police department before closing street or portion thereof. Notify said departments when streets are again passable for emergency vehicles. Do not block off emergency vehicle access to consecutive arterial crossings or dead-end streets, in excess of 300 linear feet, without written permission from fire department. Conduct operations with the least interference to fire equipment access, and at no time prevent such access. Furnish Contractor's night emergency telephone numbers to police department.

J. Coordinate traffic routing with that of others working in same or adjacent areas.

3.07 CLEANING DURING CONSTRUCTION

A. In accordance with General Conditions, as may be specified in other Specification sections, and as required herein.

B. Provide approved containers for collection and disposal of waste materials, debris, and rubbish. At least weekly, dispose of such waste materials, debris, and rubbish offsite.

C. Brush sweep entry drive, roadways, and other streets and walkways affected by the Work daily and where adjacent to the Work.

END OF SECTION

©COPYRIGHT 2026 JACOBS

SECTION 01 57 13
TEMPORARY EROSION AND SEDIMENT CONTROL

PART 1 GENERAL

1.01 SUMMARY

A. This section covers Work to implement structural and nonstructural Best Management Practices (BMP) to control soil erosion by wind or water and keep eroded sediments and other construction-generated pollutants from moving off project sites. The minimum areas requiring soil erosion and sediment control measures are indicated on the Drawings. Engineer reserves right to modify use, location, and quantities of soil erosion and sediment control measures based on activities of Contractor.

B. Erosion and sedimentation control shall be either silt sacks and dewatering bags as applicable. Construction details are included on drawings.

1.02 REFERENCES

A. Activities shall conform to the 2002 Connecticut Guidelines for Soil Erosion and Sediment Control and Drawings. In the event of a conflict, the more stringent requirement shall apply.

B. The following is a list of standards that may be referenced in this section:

1. American Association of State Highway and Transportation Officials (AASHTO): M252, Standard Specification for Corrugated Polyethylene Drainage Pipe.
2. ASTM International (ASTM):
    a. D638, Standard Test Method for Tensile Properties of Plastics.
    b. D2974, Standard Test Methods for Moisture, Ash, and Organic Matter of Peat and Other Organic Soils.
    c. D3776/D3776M, Standard Test Methods for Mass Per Unit Area (Weight) of Fabric.
    d. D4355, Standard Test Method for Deterioration of Geotextiles by Exposure to Light, Moisture and Heat in a Xenon Arc Type Apparatus.
    e. D4397, Standard Specification for Polyethylene Sheeting for Construction, Industrial, and Agricultural Applications.
    f. D4491, Standard Test Methods for Water Permeability of Geotextiles by Permittivity.
    g. D4533, Standard Test Method for Trapezoid Tearing Strength of Geotextiles.

©COPYRIGHT 2025 JACOBS

h. D4632/D4632M, Standard Test Method for Grab Breaking Load and Elongation of Geotextiles.
i. D4751, Standard Test Method for Determining Apparent Opening Size of a Geotextile.
j. D6241, Standard Test Method for Static Puncture Strength of Geotextiles and Geotextile-Related Products Using a 50-mm Probe.
k. D6459, Standard Test Method for Determination of Rolled Erosion Control Product (RECP) Performance in Protecting Hillslopes from Rainfall-Induced Erosion.
l. D6460, Standard Test Method for Determination of Rolled Erosion Control Product (RECP) Performance in Protecting Earthen Channels from Stormwater-Induced Erosion.
m. D6475, Standard Test Method for Measuring Mass Per Unit Area of Erosion Control Blankets.
n. D7322, Standard Test Method for Determination of Rolled Erosion Control Product (RECP) Ability to Encourage Seed Germination and Plant Growth Under Bench-Scale Conditions.
o. D7367, Standard Test Method for Determining Water Holding Capacity of Fiber Mulches for Hydraulic Planting.

3. National Weather Service:
   a. Precipitation-Frequency of the United States by State/Territory, 2012.
   b. Precipitation Frequency Data Server, 2012.
4. North American Weed Management Association (NAWMA).
5. U.S. Department of Agriculture, Natural Resources Conservation Service: *Urban Hydrology for Small Watersheds*; 1986. Technical Release 55.
6. U.S. Environmental Protection Agency:
   a. Developing Your Stormwater Pollution Prevention Plan: A Guide for Construction Sites, 2007. EPA-833-R-06-004.
   b. National Menu of BMPs, 2012.
7. The sections of the 2002 Connecticut Guidelines for Soil Erosion and Sediment Control which apply to this Project include, but are not limited to:

Standard and Spec. No.	Symbol	Title
5-12	CE	Construction Entrance
5-11	SF	Silt Fence
5-11	IP	Storm Drain Inlet Protection
5-11	CIP	Culvert Inlet Protection

©COPYRIGHT 2025 JACOBS

Standard and Spec. No.	Symbol	Title
5-7	DD	Temporary Diversion Dike
5-7	DV	Diversion
5-11	ST	Temporary Sediment Trap
5-11	SB	Temporary Sediment Basin
5-10	OP	Outlet Protection
5-10	CD	Rock Check Dams
5-1	TP	Tree Preservation and Protection

1.03 SYSTEM DESCRIPTION

A. Erosion and Sediment Control:

1. Provide, maintain, and operate temporary facilities to control erosion and sediment releases during construction period.
2. Design erosion and sediment controls to handle peak runoff resulting from 25-year, 24-hour storm event based on National Weather Service: Precipitation Frequency Data Server.
3. Size temporary stormwater conveyances based on procedures presented in U.S. Department of Agriculture, Natural Resources Conservation Service: Urban Hydrology for Small Watersheds, 1986. Technical Release 55.

B. Preventing erosion, and controlling runoff, sedimentation, and non-stormwater pollution, requires Contractor to perform temporary Work items including, but not limited to:

1. Providing ditches, berms, culverts, and other measures to control surface water.
2. Building dams, settling basins, energy dissipaters, and other measures, to control downstream flows.
3. Controlling underground water found during construction.
4. Covering or otherwise protecting slopes until permanent erosion control measures are working.

C. Engineer may require additional temporary control measures if it appears pollution or erosion may result from weather, nature of materials, or progress on the Work.

©COPYRIGHT 2025 JACOBS

D. Install all sediment control devices including, but not limited to, sediment ponds, perimeter silt fencing, or other sediment trapping BMPs prior to any ground disturbing activity. Do not expose more erodible earth than necessary during clearing, grubbing, excavation, borrow, or fill activities without written approval by Engineer. Engineer may increase or decrease the limits based on project conditions. Erodible earth is defined as any surface where soils, grindings, or other materials may be capable of being displaced and transported by rain, wind, or surface water runoff. Cover inactive areas of erodible earth, whether at final grade or not, using an approved soil covering practice. Phase clearing and grading to maximum extent practical to prevent exposed inactive areas from becoming a source of erosion.

E. Water Management:

1. Manage site water in accordance with the conditions of the waste discharge permit from a local permitting authority. If site water management is not subject to permit, manage as follows:
    a. Groundwater: When groundwater is encountered in an excavation, treat and discharge as follows:
        1) Obtain permission from Owner for discharge to sanitary sewer system.

F. Pollution Control: Use BMPs to prevent or minimize stormwater exposure to pollutants from spills; vehicle and equipment fueling, maintenance, and storage; other cleaning and maintenance activities; and waste handling activities. These pollutants include fuel, hydraulic fluid, and other oils from vehicles and machinery, as well as debris, leftover paints, solvents, and glues from construction operations. Implement the following BMPs when applicable:

1. Written spill prevention and response procedures.
2. Employee training on spill prevention and proper disposal procedures.
3. Spill kits in all vehicles.
4. Regular maintenance schedule for vehicles and machinery.
5. Material delivery and storage controls.
6. Training and signage.
7. Covered storage areas for waste and supplies.

G. If Engineer orders the Work suspended, continue to control erosion, pollution, and runoff during the shutdown.

H. Nothing in this section shall relieve Contractor from complying with other Contract requirements.

©COPYRIGHT 2025 JACOBS

1.04 SUBMITTALS

A. Informational Submittals:

1. Temporary Erosion and Sediment Control (TESC) Plan and procedures.
2. Initial schedule for installation of drainage, erosion, and sedimentation control measures.
3. Method for placement of soil stabilization seed and additives.

PART 2 PRODUCTS

2.01 STRAW MULCH

A. Clean salt hay or threshed straw of oats, wheat, barley, or rye; free from seed of noxious weeds.

2.02 PLASTIC COVERING

A. Clear plastic meeting requirements of ASTM D4397 for polyethylene sheeting having a minimum thickness of 6 mils.

2.03 SOIL STABILIZATION SEED

A. Per 2002 Connecticut Guidelines on Erosion and Sediment Control Section 5-3.

B. Seed mix: Annual ryegrass.

C. Fertilizer: Commercial, chemical type, uniform in composition, free-flowing, conforming to state and federal laws, and suitable for application with equipment designed for that purpose.

D. Minimum Percentage of Plant Food by Weight:

1. Nitrogen: 10 percent.
2. Phosphoric Acid: 10 percent.
3. Potash: 10 percent.

E. Lime:

1. Ground dolomitic limestone, not less than 85 percent total carbonates and magnesium, ground in order that 50 percent passes through 100-mesh sieve and 90 percent passes a 20-mesh sieve.
2. Coarser material will be acceptable provided specified rate of application is increased proportionately on basis of quantities passing 100-mesh sieve.

©COPYRIGHT 2025 JACOBS

2.04 SILT (SEDIMENT) FENCE

A. Per 2002 Connecticut Guidelines on Erosion and Sediment Control Section 5-11.

B. Support Posts: As recommended by manufacturer of geotextile.

C. Fasteners: Heavy-duty wire staples at least 1-inch long, tie wires, or hog rings, as recommended by manufacturer of geotextile.

2.05 INLET PROTECTION

A. As specified in the contract drawings.

B. Inlet curb opening shall be protected by the curb filter, which shall extend 3 inches minimum on either side of the curb opening. An overflow gap shall be provided to allow higher flows to bypass the system during larger rainfall events and intensities.

C. Straw wattles shall be used to protect inlet grates in the grassed area above the curb opening.

2.06 STRAW BALE BARRIER

A. Straw: Clean salt hay or straw of oats, wheat, barley, or rye free from seed of noxious weeds; machine baled using standard baling wire or string.

B. Straw Mulch: Suitable for spreading with mulch blower equipment.

C. Posts for Straw Bales: 2-inch by 2-inch untreated wood or commercially manufactured metal posts.

2.07 WATTLES

A. Cylinders of biodegradable plant material such as weed-free straw, coir, compost, wood chips, excelsior, or wood fiber or shavings encased within biodegradable netting.

B. Diameter: 5 inches minimum.

C. Netting Material: Clean, evenly woven, and free of encrusted concrete or other contaminating materials such as preservatives. Also free from cuts, tears, or weak places with a minimum lifespan of 6 months.

D. Compost Filler: Coarse compost, wood chips, or wood shavings.

©COPYRIGHT 2025 JACOBS

E. Wood Stakes: Untreated softwood species, 1-1/8 inch by 1-1/8 inch nominal dimension and 42 inches in length.

PART 3 EXECUTION

3.01 PREPARATION

A. Engineer's acceptance of the TESC Plan is required prior to starting earth disturbing activities.

B. Include proposed stockpile areas and installation of temporary erosion control devices, ditches, or other facilities in Work phasing plans.

C. Areas designated for Contractor's use during Project may be temporarily developed as specified to provide working, staging, and administrative areas. Include control of sediment from these areas in the TESC Plan.

D. Inlet Protection: Install inlet protection below or above, or as a prefabricated cover at each inlet grate. Install inlet protection devices prior to beginning clearing, grubbing or earthwork activities. Geotextile fabric used in prefabricated inlet protection devices must meet or exceed the requirements for Moderate Survivability and minimum filtration properties. When depth of accumulated sediment and debris reaches approximately one-half the height of an internal device or one-third the height of external device (or less when so specified by the manufacturers) or as designated by Engineer, remove deposits and stabilize onsite.

1. Below Inlet Grate:
    a. Prefabricated units specifically designed for inlet protection.
    b. Must remain securely attached to drainage structure when fully loaded with sediment and debris or at the maximum level of sediment and debris specified by manufacturer.
2. Above Inlet Grate:
    a. Devices may be silt fence, sandbags, or prefabricated units specifically designed for inlet protection.
    b. Must remain securely in place around drainage structure under all conditions.
3. Inlet Grate Cover:
    a. Prefabricated units specifically designed for inlet protection and:
        1) Be a sewn geotextile fabric unit fitted to individual grate and completely enclosing grate.
        2) Have built-in lifting devices to allow manual access of stormwater system.
        3) Use an orange monofilament geotextile fabric.

©COPYRIGHT 2025 JACOBS

b. Check dams or functionally equivalent devices may be used as inlet protection devices with approval of Engineer.

E. Mulch: Furnish, haul, and evenly apply at rates indicated and spread on seeded areas within 48 hours after seeding unless otherwise specified.

1. Distribute straw mulch material with an approved mulch spreader that uses forced air to blow mulch material on seeded areas.
2. Apply wood strand mulch by hand or by straw blower on seeded areas.
3. Hydraulically apply Short-Term Mulch at the rate of 2,500 pounds per acre. May be applied in one lift.
4. Hydraulically apply Moderate-Term Mulch and Long-Term Mulch at the rate of 3,500 pounds per acre with no more than 2,000 pounds applied in any single lift. Mulch may be applied with seed and fertilizer in moist climates. Provide mulch suitable for application with a hydroseeder.
5. Cover temporary seed applied outside application windows established herein with a mulch containing either Moderate-Term Mulch or Long-Term Mulch, as designated by Engineer.
6. Mulch areas not accessible by mulching equipment by approved hand methods.

F. Plastic Covering: Use clear plastic covering to promote seed germination when seeding is performed outside of specified dates. Use black plastic covering for stockpiles or other areas where vegetative growth is unwanted. Place plastic with at least a 12-inch overlap of all seams. Install and maintain plastic cover to prevent water from cutting under the plastic and to prevent cover from blowing open in the wind.

G. Seeding:

1. Perform seeding in accordance with the following schedule:
   a. Between April 1 and June 15, or August 15 to October 1.
2. Soil Stabilization Seeding:
   a. Consists of application of the following materials in quantities as further described herein for stockpiles and disturbed areas left inactive for more than 14 days.
      1) Lime.
      2) Fertilizer.
      3) Seed.
      4) Mulch.
      5) Maintenance.
   b. Hydroseeding is acceptable method of applying seed and associated soil conditioning agents described above.

©COPYRIGHT 2025 JACOBS

c. Place and maintain over disturbed areas. Maintain until such time as areas are approved for permanent seeding. As a minimum, maintenance shall include the following:
   1) Fix up and reseeding of bare areas or redisturbed areas.
   2) Mowing stands of grass or weeds exceeding 6 inches in height.

H. Silt (Sediment) Fence:

1. Silt fence shall be installed in accordance with the Drawings. When backup support is used, use steel wire with a maximum mesh spacing of 2 inches by 4 inches, or plastic mesh as resistant to ultraviolet radiation as the geotextile it supports. Provide wire or plastic mesh with strength equivalent to or greater than as required for unsupported geotextile (for example, 180 pounds grab tensile strength in the machine direction).
2. Attach geotextile to posts and support system using staples, wire, or in accordance with manufacturer's recommendations. Geotextile shall be sewn together at the point of manufacture, or at a location approved by Engineer, to form geotextile lengths as required.
3. Provide wood or steel support posts at sewn seams and overlaps and as shown on the Drawings and necessary to support fence.
4. Wood Posts: Minimum dimensions of 1-1/4-inch by 1-1/4-inch by the minimum length shown on the Drawings.
5. Steel Posts: Minimum weight of 0.90 lb/ft.
6. When sediment deposits reach approximately one-third the height of the silt fence, remove and stabilize deposits.

I. Straw Bales:

1. Embed minimum of 4 inches in flat-bottom trench.
2. Place with ends tightly abutting or overlapped. Corner abutment is not acceptable.
3. Install in order that bale bindings are oriented around sides and not over top and bottom of bale.
4. Use two posts for each bale. Drive posts through bale until top of post is flush with top of bale.
5. Wedge loose straws in gaps between bales.

J. Wattles: Install wattles as soon as construction will allow or when designated by Engineer. Begin trench construction and wattle installation at base of slope and work uphill. Spread excavated material evenly along the uphill slope and compact using hand tamping or other method approved by Engineer. On gradually sloped or clay-type soils, provide trenches 2 inches to 3 inches deep. On loose soils, in high rainfall areas, or on steep slopes, provide trenches

©COPYRIGHT 2025 JACOBS

3 inches to 5 inches deep, or half the thickness of the wattle. Exercise care when installing wattles to minimize disturbance of waterways and prevent sediment or pollutant discharge into waterbodies.

3.02 ADDITIONAL REQUIREMENTS

A. Natural Buffer or Equivalent:

1. Unless natural buffer between the Project Site and receiving waters has previously been eliminated by pre-existing development disturbances, comply with one of the following alternatives if stormwater from construction will discharge to surface water:
   a. Provide a 50-foot, undisturbed natural buffer between construction disturbances and surface water.
   b. Provide an undisturbed natural buffer that is less than 50 feet supplemented by additional erosion and sediment controls, which in combination, achieve a sediment load reduction that is equivalent to a 50-foot buffer.
   c. If it is infeasible to provide an undisturbed natural buffer of any size, implement erosion and sediment controls that achieve a sediment load reduction that is equivalent to a 50-foot buffer.

3.03 MAINTENANCE

A. The TESC Plan measures described in this specification are minimum requirements for anticipated Site conditions. During the construction period, upgrade these measures as needed to comply with all applicable local, state, and federal erosion and sediment control regulations.

B. Maintain erosion and sediment control BMPs so they properly perform their function until Engineer determines they are no longer needed.

C. Construction activities must avoid or minimize excavation and creation of bare ground during wet weather.

D. The intentional washing of sediment into storm sewers or drainage ways must not occur. Vacuuming or dry sweeping and material pickup must be used to cleanup released sediments.

E. Inspect, repair, and replace as necessary erosion control measures during the time period from start of construction to completion of construction.

F. Unless otherwise specified, remove deposits before the depth of accumulated sediment and debris reaches approximately height of BMP. Dispose of debris or contaminated sediment at approved locations. Clean sediments may be stabilized onsite using BMPs as approved by Engineer.

©COPYRIGHT 2025 JACOBS

G. Sediment Fence: Remove trapped sediment before it reaches one-third of the above ground fence height and before fence removal.

H. Initiate repair or replacement of damaged erosion and sediment control BMPs immediately, and work completed by end of next work day. Significant replacement or repair must be completed within 7 days, unless infeasible.

I. Within 24 hours, remediate any significant sediment that has left construction site. Investigate cause of the sediment release and implement steps to prevent a recurrence of discharge within same 24 hours. Perform in-stream cleanup of sediment according to applicable regulations.

J. At end of each work day, stabilize or cover soil stockpiles or implement other BMPs to prevent discharges to surface waters or conveyance systems leading to surface waters.

K. Temporarily stabilize soils at end of shift before holidays and weekends, if needed. Ensure soils are stable during rain events at all times of year.

L. Initiate stabilization by no later than end of next work day after construction work in an area has stopped permanently or temporarily.

M. Provide and maintain soil stabilization seeding at all times.

N. Properly dispose of construction materials and waste, including sediment retained by temporary BMPs.

3.04 REMOVAL

A. When Engineer determines that an erosion control BMP is no longer required, remove BMP and all associated hardware from the Project limits. When materials are biodegradable, Engineer may approve leaving temporary BMP in place.

END OF SECTION

©COPYRIGHT 2025 JACOBS

SECTION 01 77 00
CLOSEOUT PROCEDURES

PART 1 GENERAL

1.01 SUBMITTALS

A. Informational Submittals:

1. Submit prior to application for final payment.
   a. Record Documents: As required in General Conditions.
   b. Special bonds, special guarantees, and service agreements.
   c. Consent of Surety to Final Payment: As required in General Conditions.
   d. Releases or Waivers of Liens and Claims: As required in General Conditions.
   e. Releases from Agreements.
   f. Final Application for Payment: Submit in accordance with procedures and requirements stated in Section 01 29 00, Payment Procedures.
   g. Extra Materials: As required by individual Specification sections.

1.02 RECORD DOCUMENTS

A. Quality Assurance:

1. Furnish qualified and experienced person, whose duty and responsibility shall be to maintain record documents.
2. Accuracy of Records:
   a. Coordinate changes within record documents, making legible and accurate entries on each sheet of Drawings and other documents where such entry is required to show change.
   b. Purpose of Project record documents is to document factual information regarding aspects of the Work, both concealed and visible, to enable future modification of the Work to proceed without lengthy and expensive Site measurement, investigation, and examination.
3. Make entries within 24 hours after receipt of information that a change in the Work has occurred.
4. Prior to submitting each request for progress payment, request Engineer's review and approval of current status of record documents. Failure to properly maintain, update, and submit record documents may result in a deferral by Engineer to recommend whole or any part of Contractor's Application for Payment, either partial or final.

©COPYRIGHT 2025 JACOBS

1.03 RELEASES FROM AGREEMENTS

A. Furnish Owner written releases from property owners or public agencies where side agreements or special easements have been made, or where Contractor's operations have not been kept within the Owner's construction right-of-way.

B. In the event Contractor is unable to secure written releases:

1. Inform Owner of the reasons.
2. Owner or its representatives will examine the Site, and Owner will direct Contractor to complete the Work that may be necessary to satisfy terms of the side agreement or special easement.
3. Should Contractor refuse to perform this Work, Owner reserves right to have it done by separate contract and deduct cost of same from Contract Price or require Contractor to furnish a satisfactory bond in a sum to cover legal claims for damages.
4. When Owner is satisfied that the Work has been completed in agreement with Contract Documents and terms of side agreement or special easement, right is reserved to waive requirement for written release if: (i) Contractor's failure to obtain such statement is due to grantor's refusal to sign, and this refusal is not based upon any legitimate claims that Contractor has failed to fulfill terms of side agreement or special easement, or (ii) Contractor is unable to contact or has had undue hardship in contacting grantor.

PART 2 PRODUCTS (NOT USED)

PART 3 EXECUTION

3.01 MAINTENANCE OF RECORD DOCUMENTS

A. General:

1. Promptly following commencement of Contract Times, secure from Engineer at no cost to Contractor, one complete set of Contract Documents. Drawings will be full size.
2. Label or stamp each record document with title, "RECORD DOCUMENTS," in neat large, printed letters.
3. Record information concurrently with construction progress and within 24 hours after receipt of information that change has occurred. Do not cover or conceal Work until required information is recorded.

©COPYRIGHT 2025 JACOBS

B. Preservation:

1. Maintain documents in a clean, dry, legible condition and in good order. Do not use record documents for construction purposes.
2. Make documents and samples available at all times for observation by Engineer.

C. Making Entries on Drawings:

1. Using an erasable colored pencil (not ink or indelible pencil), clearly describe change by graphic line and note as required.
    a. Color Coding:
        1) Green when showing information deleted from Drawings.
        2) Red when showing information added to Drawings.
        3) Blue and circled in blue to show notes.
2. Date entries.
3. Call attention to entry by “cloud” drawn around area or areas affected.
4. Legibly mark to record actual changes made during construction, including, but not limited to:
    a. Depths of various elements of foundation in relation to finished first floor data if not shown or where depth differs from that shown.
    b. Location of internal utilities and appurtenances concealed in the construction referenced to visible and accessible features of the structure.
    c. Locate existing facilities, piping, equipment, and items critical to the interface between existing physical conditions or construction and new construction.
    d. Changes made by Addenda and Field Orders, Work Change Directive, Change Order, and Engineer’s written interpretation and clarification using consistent symbols for each and showing appropriate document tracking number.
5. Dimensions on Schematic Layouts: Show on record drawings, by dimension, the centerline of each run of items such as are described in previous subparagraph above.
    a. Clearly identify the item by accurate note such as “cast iron drain,” “galv. water,” and the like.
    b. Show, by symbol or note, vertical location of item (“under slab,” “in ceiling plenum,” “exposed,” and the like).
    c. Make identification so descriptive that it may be related reliably to Specifications.

©COPYRIGHT 2025 JACOBS

3.02 FINAL CLEANING

A. At completion of the Work or of a part thereof and immediately prior to Contractor's request for certificate of Substantial Completion; or if no certificate is issued, immediately prior to Contractor's notice of completion, clean entire Site or parts thereof, as applicable.

1. Leave the Work and adjacent areas affected in a cleaned condition satisfactory to Owner.
2. Remove grease, dirt, dust, paint or plaster splatter, stains, labels, fingerprints, and other foreign materials from exposed surfaces.
3. Repair, patch, and touch up marred surfaces to specified finish and match adjacent surfaces.
4. Clean all windows.
5. Broom clean exterior paved driveways and parking areas.

B. Use only cleaning materials recommended by manufacturer of surfaces to be cleaned.

END OF SECTION

©COPYRIGHT 2025 JACOBS

SECTION 02 61 00
REMOVAL AND DISPOSAL OF CONTAMINATED SOIL

PART 1 GENERAL

1.01 SUMMARY

A. This section describes the Work involved in removal, handling, testing, and disposal of hazardous and nonhazardous soil, debris, excavated waste, and wastewater if such material is encountered or generated during performance of the Work.

1.02 REFERENCES

A. The following is a list of standards which may be referenced in this section:
   1. U.S. Code of Federal Regulations (CFR):
      a. Title 29, Labor, Chapter XVII Occupational Safety and Health Administration (OSHA), Part 1910, Occupational Safety and Health Standards: Part 1910.120, Hazardous Waste Operations and Emergency Response.
      b. Title 40, Protection of Environment, Chapter I Environmental Protection Agency (EPA), Part 261, Identification and Listing of Hazardous Waste:
         1) Part 261.21, Characteristic of Ignitability.
         2) Part 261.22, Characteristic of Corrosivity.
         3) Part 261.23, Characteristic of Reactivity.
   2. Connecticut Department of Energy and Environmental Protection
   3. Resources Conservation and Recovery Act (RCRA).
   4. Toxic Substances Control Act (TSCA).

1.03 DEFINITIONS

A. ACM: Asbestos-containing materials.

B. Excavated Waste: Buried solid waste, refuse, demolition waste, construction waste, and special waste as defined in the Connecticut Department of Energy and Environmental Protection (CT DEEP) regulations. Excavated waste does not include demolition debris, solid waste, refuse, construction waste, or special waste created by Contractor incidental to the Work.

C. Free Product: Free-standing petroleum or chemical liquid product present in excavation or floating on water in excavation.

D. Hazardous Soil and Debris: Material which qualifies as a hazardous or toxic waste as defined by the Resources Conservation and Recovery Act (RCRA) or the Toxic Substances Control Act (TSCA).

©COPYRIGHT 2025 JACOBS

E. Nonhazardous Soil and Debris: Material which does not qualify as a hazardous or toxic waste as defined by RCRA or TSCA and includes excavated waste as defined above.

F. Wastewater: Water produced by Contractor's operation, including groundwater removed, stormwater entering excavation pits despite controls, washdown water, used decontamination water, and other water that requires handling by Contractor to accomplish the Work. Wastewater may be hazardous or nonhazardous and shall require special handling and testing.

1.04 SUBMITTALS

A. Informational Submittals:

1. Prior to commencement of the Work submit the following:
   a. Permits and certification for soil, debris, and waste haulers.
   b. Permits, certification, and acceptance requirements for proposed soil, debris, and wastewater disposal or treatment facilities.
   c. Qualifications:
      1) Contractor, Subcontractor documentation of experience.
      2) Contractor's Personnel: Documentation personnel proposed for Work with contaminated materials have been 40-hour trained in accordance with 29 CFR 1910.120.
      3) Waste Transporter: Documentation of licensing and equipment capabilities.
      4) Offsite Disposal and Treatment Facilities: Documentation of licensing, disposal requirements, and acceptance of waste.
   d. Site-specific Health and Safety Plan:
      1) In accordance with 29 CFR 1910.120.
      2) Include Contractor-proposed monitoring, personnel protective gear, worker training and certifications, and emergency procedures.
      3) State criteria or measures when air monitoring and work by HAZWOPER-trained personnel are no longer necessary.
2. During excavation and removal activities submit the following:
   a. Copies of manifests or bills of lading, and waste disposal or treatment facility receipts, including weight or volume tickets, for waste materials, solid or liquid, removed from Site and transported to disposal facilities.

1.05 QUALITY ASSURANCE

A. Qualifications:

1. Contractor, Subcontractor:

©COPYRIGHT 2025 JACOBS

a. Proven history of successfully executing similar projects for a minimum of 3 years.
b. Certifications or licenses if required by state or local authorities.
c. Proper equipment and personnel experienced in similar work.
1) Personnel shall be formally trained in procedures for contaminated soil and water removal (for example, HAZWOPER training).

2. Waste Transporter: Licensed waste haulers with trucks equipped with containment and cover systems to transport solid and liquid waste materials on public streets and roads without spillage.
3. Offsite Disposal and Treatment Facilities: Proposed facilities shall be licensed to accept the various waste types and quantities to be generated during the Work.

B. Codes and Regulations:
1. Comply with federal, state, and local regulations in handling, testing, transporting, and disposing materials and in performing the Work.
2. Prior to commencing removal operations, obtain applicable local, state, and federal permits and licenses that directly impact Contractor's ability to perform the Work.

PART 2 PRODUCTS

2.01 MATERIALS

A. Plastic Sheeting:
1. Nylon-reinforced polyethylene sheeting, opaque/frosted.
2. Thickness: Minimum 10 mils.

B. Ballast: Sandbags or other ballast materials of sufficient weight and quantity to maintain polyethylene sheeting securely in place.

PART 3 EXECUTION

3.01 GENERAL

A. Contractor shall be responsible for the following:
1. Providing means, methods, and equipment necessary for sampling, excavating, collecting, handling, processing, loading, and disposing of hazardous and nonhazardous soil, debris, excavated waste, and wastewater generated as part of the Work.
2. Selecting, providing, and coordinating with qualified transporters, disposal facilities, and treatment facilities for transporting, disposing, and

©COPYRIGHT 2025 JACOBS

documenting hazardous and nonhazardous waste transportation and disposal in accordance with this specification.

3. Complying with federal, state, and local requirements for transporting solid and liquid materials from Site through applicable jurisdictions, and be responsible for associated fines, penalties, and other costs for noncompliance.
4. Obtaining and submitting acceptance letters and receipts for materials disposed at each facility.
5. Including provisions in its construction sequence and schedule for sampling, analysis, and review of sampling results.

B. Soil and Debris Analytical and Physical Characterization Testing Plan:
   1. Plan shall include, but not be limited to, the following:
      a. Plan view showing proposed sample locations, depths, and number of samples for characterization and disposal facility acceptance testing, and for confirmatory testing, if required.
      b. Sampling and analysis of areas found to contain hazardous materials. Results shall be used to determine if material should be handled and disposed of as hazardous and to define extent of this material.
      c. Detail sampling and characterization of other materials excavated from Site.
      d. Testing requirements shall include chemical and physical analyses necessary to access the material's environmental and geotechnical characteristics where appropriate.
      e. Sampling plan shall characterize materials, and conform to treatment and disposal facility acceptance requirements, if any.
      f. Proposed testing laboratory, analyses required, and testing methods.

C. Provide qualified Licensed Site Professional to oversee and supervise sampling, excavation, and waste handling operations at Site and to coordinate with proposed disposal and treatment facilities.

3.02 WASTE CHARACTERIZATION SAMPLING AND ANALYSIS

A. Prior to commencing waste removal from Site, perform onsite sampling and laboratory testing to screen Site for potential hazardous waste and to conform to acceptance criteria of proposed disposal or treatment facilities. Sampling and testing shall be done in accordance with approved Soil and Debris Analytical and Physical Characterization Testing Plan.

B. Allow a minimum of 2 weeks in schedule for testing and review by disposal facility and Engineer.

C. Test for ignitability, corrosivity, and reactivity in accordance with 40 CFR 261.21, 40 CFR 261.22, and 40 CFR 261.23, if required by proposed treatment facility or disposal facility.

©COPYRIGHT 2025 JACOBS

3.03 WASTE EXCAVATION

A. Hazardous and nonhazardous soil and debris may be encountered during excavation for facilities at Site. Material shall be removed, handled, and disposed in accordance with Federal and State environmental regulations.

B. Perform waste excavation in accordance with requirements of Section 31 23 16, Excavation, unless otherwise specified in this section.

C. Water control shall be provided in accordance with Section 31 23 19.01, Dewatering.

D. Sheeting, shoring, and bracing required to support excavation operations shall be provided in accordance with Section 31 41 00, Shoring.

E. Conduct Work in excavated area in accordance with Contractor's Site-specific safety plan.

F. Excavate methodically and submit weekly excavation plans no later than Thursday of week preceding the Work.

G. Excavations shall proceed in lifts no greater than 1 foot thick. At Engineer's request, excavate test pits no greater than 4 feet deep in advance of excavation for purpose of sampling and delineating material to be excavated.

H. Immediately stop excavation and notify Engineer upon encountering material unanticipated or outside scope of this Specification. This may include, but is not limited to, free product, tanks, ACM, or solid material other than excavated waste.

I. Overexcavation:
   1. Excavate only amount of soil required to construct the Work shown on Drawings.
   2. Overexcavation of additional hazardous soil/debris, solid waste, or soil beyond amount required for construction of foundation and subgrade preparation shall not be performed without written authorization by Engineer.
   3. Overexcavation of hazardous soil/debris, solid waste, or soil that is not authorized by Engineer shall be disposed and replaced at Contractor's own expense.

3.04 CONFIRMATORY SAMPLING AND BACKFILL

A. Upon completion of excavation, Contractor shall take confirmation samples.

B. Do not perform activities such as backfill or installation of foundations in excavated area until confirmation sampling, inspections, or other confirmatory measures have been taken and approval has been given by Engineer to proceed with subsequent work.

©COPYRIGHT 2025 JACOBS

C. Backfill, where required to complete the Work, shall be done in accordance with requirements of Section 31 23 23, Fill and Backfill. Other work in completed excavation shall be done in accordance with Drawings and applicable specification section.

3.05 WASTE HANDLING AND DISPOSAL

A. To extent possible, schedule and coordinate Work such that excavated waste and wastewater can be loaded and removed from Site with minimal handling or storage requirements.

B. No waste stockpile or storage areas are available at Site. Schedule operations in a manner such that excavated materials and wastewater shall be removed immediately from Site to approved disposal facility or treatment facility.

C. Provide labor, equipment, and materials to stabilize or process waste materials as necessary to meet minimum requirements for offsite transport and disposal.

D. Transportation:
1. Provide sealed or lined vehicles and other measures necessary to prevent spillage or tracking of waste materials, mud, or other debris on local streets or roads.
2. Inspect and document vehicles and containers for proper operation and covering.
3. Inspect vehicles and containers for proper markings, manifests, and other requirements for waste shipment.
4. Perform and document decontamination procedures prior to leaving Site and again before leaving disposal or treatment facility.
5. Obtain and submit receipts of confirmation from disposal or treatment facilities that solid and liquid wastes were accepted for disposal or treatment, including weight tickets or other confirmation of quantities received.

3.06 EQUIPMENT DECONTAMINATION

A. Decontaminate equipment that has come into contact with hazardous soil or debris, solid waste, or impacted water by methods approved by Engineer.

B. Wastewater and sediment generated by decontamination activities shall be contained and treated or disposed of in accordance with provisions stated in this section.

END OF SECTION

©COPYRIGHT 2025 JACOBS

SECTION 31 23 16
EXCAVATION

PART 1 GENERAL

1.01 SUBMITTALS

A. Action Submittals:

1. Excavation Plan, Detailing:
   a. Methods and sequencing of excavation.
   b. Proposed locations of stockpiled excavated material.
   c. Proposed onsite and offsite spoil disposal sites.
   d. Numbers, types, and sizes of equipment proposed to perform excavations.
   e. Anticipated difficulties and proposed resolutions.
   f. Reclamation of onsite spoil disposal areas.

1.02 QUALITY ASSURANCE

A. Provide adequate survey control to avoid unauthorized overexcavation.

1.03 WEATHER LIMITATIONS

A. Material excavated when frozen or when air temperature is less than 32 degrees F shall not be used as fill or backfill until material completely thaws.

B. Material excavated during inclement weather shall not be used as fill or backfill until after material drains and dries sufficiently for proper compaction.

1.04 SEQUENCING AND SCHEDULING

A. Demolition: Complete applicable Work specified in Section 02 41 00, Demolition, prior to excavating.

PART 2 PRODUCTS (NOT USED)

PART 3 EXECUTION

3.01 GENERAL

A. Excavate to lines, grades, and dimensions shown on drawings and as necessary to accomplish Work. Excavate to within tolerance of plus or minus 0.1 foot, except where dimensions or grades are shown or specified as maximum or minimum. Allow for forms, working space, granular base, topsoil, and similar items, wherever applicable. Trim to neat lines where concrete is to be deposited against earth.

©COPYRIGHT 2025 JACOBS

B. Do not overexcavate without written authorization of Engineer.

C. Use of explosives is not permitted.

3.02 UNCLASSIFIED EXCAVATION

A. Excavation is unclassified. Complete all excavation regardless of the type, nature, or condition of the materials encountered.

3.03 TRENCH WIDTH

A. Minimum Width of Trenches:

1. Single Pipes, Conduits, Direct-buried Cables, and Duct Banks:
   a. Less than 4-inch Outside Diameter or Width: 18 inches.
   b. Greater than 4-inch Outside Diameter or Width: 24 inches greater than inside diameter or width of pipe, conduit, direct-buried cable, or duct bank.
2. Multiple Pipes, Conduits, Cables, or Duct Banks in Single Trench: 24 inches greater than aggregate width of pipes, conduits, cables, duct banks, plus space between.
3. Increase trench widths by thicknesses of sheeting.

B. Maximum Trench Width: Unlimited, unless otherwise shown or specified, or unless excess width will cause damage to existing facilities, adjacent property, or completed Work. Pipe of greater strength or superior pipe bedding, when approved in writing by Engineer, may be used in lieu of maintaining the pipe widths shown or specified.

3.04 PIPE BEDDING GROOVES FOR NONPERFORATED DRAIN LINES

A. Semicircular, trapezoidal, or 90-degree-V.

B. Excavated or plowed into trench bottom. Forming groove by compaction will not be acceptable.

3.05 STOCKPILING EXCAVATED MATERIAL

A. Stockpile excavated material that is suitable for use as fill or backfill until material is needed.

B. Confine stockpiles to within easements, rights-of-way, and approved work areas. Do not obstruct roads or streets.

©COPYRIGHT 2025 JACOBS

C. Do not stockpile excavated material adjacent to trenches and other excavations, unless excavation side slopes and excavation support systems are designed, constructed, and maintained for stockpile loads.

D. Do not stockpile excavated materials near or over existing facilities, adjacent property, or completed Work, if weight of stockpiled material could induce excessive settlement.

3.06 DISPOSAL OF SPOIL

A. Dispose of excavated materials, which are unsuitable or not needed for fill or backfill, in designated spoil disposal areas.

B. Dispose of debris resulting from removal of underground facilities as specified on drawings.

C. Dispose of debris resulting from removal of organic matter, trash, refuse, and junk off site when said material is first removed. The site has limited space and the above items shall not be stockpiled on site with exception of excavated material for the new precast pump station.

END OF SECTION

©COPYRIGHT 2025 JACOBS

SECTION 31 23 19.01
DEWATERING

PART 1 GENERAL

1.01 WORK INCLUDED

A. This Section covers the Work necessary to control, lower, handle, treat, and dispose of groundwater and surface water, and all other water that may be encountered, as required for performance of the Work.

B. The Work included herein consists of all dewatering required to accomplish the installation of sanitary sewer piping and manholes as per Section 01 11 00.

C. The Contractor shall design, install, and operate dewatering systems to control groundwater during excavation, all installations, and backfill in project area.

1.02 DESIGN CRITERIA

A. The Contractor shall design and operate a dewatering system capable of lowering and maintaining groundwater a minimum of 2 feet below the lowest point of any required excavations without damaging adjacent utilities, structures, and facilities. The dewatering system shall also control any surface water that may enter the excavation.

B. The Contractor shall design the dewatering system based on a design groundwater elevation at the existing ground surface at all locations, in order to handle possible seasonal groundwater level variations.

C. The dewatering system must be selected and coordinated in conjunction with the excavation support system.

1.03 SUBMITTALS

A. Action Submittals: All submittals shall be action submittals.

B. All submittals shall be prepared and stamped by the Contractor’s engineer who shall be a professional engineer licensed in State of Connecticut.

C. Dewatering Plan:

1. Descriptions of proposed groundwater and surface water control facilities including, but not limited to, equipment; methods; installation; standby equipment and power supply; pollution control facilities including silt removal facilities, contaminant removal devices and

©COPYRIGHT 2025 JACOBS

systems; discharging locations to be used; removal of water control systems.

2. Manufacturer's literature describing installation, operation, and maintenance procedures for all components of the water control system and treatment system.
3. Written plan for dewatering operations including sequence of well and well-point placement coordinated with excavation shoring and bracings and control procedures to be adopted if dewatering problems arise.
4. Design calculations demonstrating adequacy of the selected dewatering system and equipment to achieve any treatment requirement as stated on Drawings.

D. Shop Drawings:

1. Include plans, elevations, sections, and details.
2. Show arrangement, locations, and details of wells and well points; locations of risers, headers, filters, pumps, power units, and discharge lines; and means of discharge, control of sediment, and disposal of water.
3. Details and limits of temporary ramps and covers over header discharge pipe and power cables.
4. Include layouts of monitoring wells and flow-measuring devices for monitoring dewatering system performance and for monitoring discharging quantity.

E. If system is modified during installation or operation, revise and resubmit dewatering operations plan and shop drawings for approval.

PART 2 PRODUCTS (NOT USED)

PART 3 EXECUTION

3.01 GENERAL

A. Continuously control water during course of construction, including weekends and holidays and during periods of work stoppages, and provide adequate backup systems to maintain control of water.

B. Control surface water and groundwater such that excavation to the planned bottom of excavation and required overexcavation and backfill is made in-the-dry, and that softening/instability or disturbance due to the presence or seepage of water does not occur.

C. Locate water control system components where they will not interfere with construction activities adjacent to the Work area.

©COPYRIGHT 2025 JACOBS

3.02 SURFACE WATER CONTROL

A. See Section 01 50 00, Temporary Facilities and Controls, Article Temporary Controls.

B. Surface runoff shall be controlled to prevent entry of water into excavations.

C. Remove surface runoff controls when no longer needed.

3.03 DEWATERING SYSTEMS

A. Provide, operate, and maintain dewatering systems of sufficient size and capacity to permit excavation and subsequent construction in dry and to lower and maintain groundwater level a minimum of 2 feet below the lowest point of excavation. Continuously maintain excavations free of water, regardless of source, and until backfilled to final grade.

B. Dewatering systems may include, but not limited to wells or well points, and other equipment and appurtenances installed outside limits of excavations and sufficiently below lowest point of excavation, or to maintain specified groundwater elevation.

C. If dewatering wells are selected by the Contractor, the Contractor is responsible for confirming and obtaining all required well permits from authorities having jurisdiction.

D. Design and Operate Dewatering Systems:

1. To prevent loss of ground as water is removed.
2. To avoid inducing settlement or damage to existing facilities, completed Work, or adjacent property.
3. To relieve artesian pressures and resultant uplift of excavation bottom.

E. Provide sufficient redundancy in each system to keep excavation free of water in event of component failure.

F. Provide 100 percent emergency power backup with automatic startup and switchover in event of electrical power failure.

G. Provide supplemental ditches and sumps only as necessary to collect water from local seeps.

3.04 SETTLEMENT

A. Monitor settlement as specified in Section 31 41 00, Shoring.

©COPYRIGHT 2025 JACOBS

3.05 DISPOSAL OF WATER

A. Obtain discharge permit for water disposal from authorities having jurisdiction.

B. Treat water collected by dewatering operations, as required by regulatory agencies, prior to discharge.

C. Discharge water as required by discharge permit and in manner that will not cause erosion or flooding, or otherwise damage existing facilities, completed Work, or adjacent property.

D. Remove solids from treatment facilities and perform other maintenance of treatment facilities as necessary to maintain their efficiency.

3.06 PROTECTION OF PROPERTY

A. Provide and operate devices or systems, as necessary to prevent damage to existing facilities, completed Work, and adjacent property.

B. Securely support existing facilities, completed Work, and adjacent property. Support shall include, but not be limited to, bracing, underpinning, or compaction grouting.

END OF SECTION

©COPYRIGHT 2025 JACOBS

SECTION 31 23 23
FILL AND BACKFILL

PART 1 GENERAL

1.01 REFERENCES

A. The following is a list of standards which may be referenced in this section:

1. ASTM International (ASTM):
   a. C136, Standard Method for Sieve Analysis of Fine and Coarse Aggregates.
   b. D75, Standard Practice for Sampling Aggregates.
   c. D1557, Test Method for Laboratory Compaction Characteristics of Soil Using Modified Effort (56,000 ft-lbf/ft^3 (2,700 kN-m/m^3)).
   d. D6938, Standard Test Methods for In-Place Density and Water Content of Soil and Soil-Aggregate by Nuclear Methods (Shallow Depth).

1.02 DEFINITIONS

A. Borrow Material: Material from required excavations or from designated borrow areas on or near Site.

B. Completed Course: A course or layer that is ready for next layer or next phase of Work.

C. Imported Material: Materials obtained from sources offsite, suitable for specified use.

D. Influence Area: Area within planes sloped downward and outward at 60-degree angle from horizontal measured from:

1. 1 foot outside outermost edge at base of foundations or slabs.
2. 1 foot outside outermost edge at surface of roadways or shoulder.
3. 0.5 foot outside exterior at spring line of pipes or culverts.

E. Lift: Loose (uncompacted) layer of material.

F. Optimum Moisture Content:

1. Determined in accordance with ASTM standard specified to determine maximum dry density for relative compaction.

©COPYRIGHT 2025 JACOBS

2. Determine field moisture content on basis of fraction passing 3/4-inch sieve.

G. Relative Compaction:

1. Ratio, in percent, of as-compacted field dry density to laboratory maximum dry density as determined in accordance with ASTM D1557.
2. Apply corrections for oversize material to either as-compacted field dry density or maximum dry density, as determined by Engineer.

H. Relative Density: Calculated in accordance with ASTM D4254 based on maximum index density determined in accordance with ASTM D4253 and minimum index density determined in accordance with ASTM D4254.

I. Selected Backfill Material: Materials available onsite that Engineer determines to be suitable for specific use.

J. Structural Fill: Fill materials as required around structures, and under pavements, and other facilities.

K. Well-graded:

1. A mixture of particle sizes with no specific concentration or lack thereof of one or more sizes.
2. Does not define numerical value that must be placed on coefficient of uniformity, coefficient of curvature, or other specific grain size distribution parameters.
3. Used to define material type that, when compacted, produces a strong and relatively incompressible soil mass free from detrimental voids.

1.03 SUBMITTALS

A. Action Submittals:

1. Samples:
   a. Imported material taken at source (each type and source).
   b. Gradation results from material taken at source.
2. Certified test results from independent testing agency.
3. In-place density tests results.

B. Informational Submittals: Manufacturer’s data sheets for compaction equipment.

1.04 QUALITY ASSURANCE

A. Notify Engineer when:

©COPYRIGHT 2025 JACOBS

1. Structure is ready for backfilling, and whenever backfilling operations are resumed after a period of inactivity.
2. Soft or loose subgrade materials are encountered wherever backfill is to be placed.
3. Backfill material appears to be deviating from Specifications.

1.05 SEQUENCING AND SCHEDULING

A. Complete applicable Work specified in Section 02 41 00, Demolition and Section 31 23 16, Excavation; prior to placing fill or backfill.

B. Backfill around manholes only after completion of satisfactory leakage tests as specified in Section 33 05 13B, Manholes.

C. Backfill around buried structures only after structure is set in position, securely anchored, and ready to be backfilled, and Engineer provides authorization to backfill.

PART 2 PRODUCTS

2.01 SOURCE QUALITY CONTROL

A. Gradation Tests: In accordance with ASTM C136.

1. As necessary to locate acceptable sources of imported material.
2. During production of imported material, provide one gradation test for each type/source of the imported material.

B. Samples: Collected in accordance with ASTM D75.

1. During production of imported material, provide one sample for each type/source of the imported material.
2. Clearly mark to show source of material and intended use.

2.02 EARTHFILL

A. Excavated material from required excavations and designated borrow sites, free from rocks larger than 3 inches, from roots and other organic matter, ashes, cinders, trash, debris, and other deleterious materials.

B. Material containing more than 10 percent gravel, stones, or shale particles is unacceptable.

C. Provide imported material of equivalent quality, if required to accomplish Work.

©COPYRIGHT 2025 JACOBS

2.03 GRANULAR FILL (CRUSHED STONE)

A. 3/4-inch clean crushed gravel or crushed rock.

B. Free from dirt, clay balls, and organic material.

C. Maximum 3 percent by weight passing No. 200 sieve.

2.04 STRUCTURAL FILL

A. Clean gravel or crushed rock, reasonably well-graded from coarse to fine.

B. Maximum Particle Size: 3/4 inch.

C. Maximum 8 percent by weight passing No. 200 sieve

D. Dry sand, accepted by Engineer, may be provided for zones above groundwater level.

2.05 WATER FOR MOISTURE CONDITIONING

A. Free of hazardous or toxic contaminates, or contaminants deleterious to proper compaction.

PART 3 EXECUTION

3.01 GENERAL

A. Keep placement surfaces free of water, debris, and foreign material during placement and compaction of fill and backfill materials.

B. Place and spread fill and backfill materials in horizontal lifts of uniform thickness, in a manner that avoids segregation, and compact each lift to specified densities prior to placing succeeding lifts. Slope lifts only where necessary to conform to final grades or as necessary to keep placement surfaces drained of water.

C. During filling and backfilling, keep level of fill and backfill around each structure even.

D. Do not place fill or backfill, if fill or backfill material is frozen, or if surface upon which fill or backfill is to be placed is frozen.

E. Tolerances:

1. Final Lines and Grades: Within a tolerance of 0.1 foot unless dimensions or grades are shown or specified otherwise.

©COPYRIGHT 2025 JACOBS

2. Grade to establish and maintain slopes and drainage as shown. Reverse slopes are not permitted.

F. Settlement: Correct and repair any subsequent damage to structures, pavements, curbs, slabs, piping, and other facilities, caused by settlement of fill or backfill material.

3.02 BACKFILL UNDER AND AROUND STRUCTURES – NOT USED

3.03 SITE TESTING

A. Gradation: Gradation Test in accordance with ASTM C136.

1. At least one test per each stockpile of excavated material to be used as Earthfill.

B. Proctor Test: Proctor Test in accordance with ASTM D1557.

1. At least one test per each stockpile of excavated material to be used as Earthfill.

C. In-place Density Tests: In accordance with ASTM D6938. During placement of materials, test as follows:

1. Structural Fill: Perform 2 tests at every 2 vertical feet of backfill.

3.04 REPLACING OVEREXCAVATED MATERIAL

A. Replace excavation carried below grade lines shown or established by Engineer as follows:

1. Trenches:
   a. Unauthorized Overexcavation: Either trench stabilization material or granular pipe base material, as specified in Section 31 23 23.15, Trench Backfill.
   b. Authorized Overexcavation: Trench stabilization material, as specified in Section 31 23 23.15, Trench Backfill.

END OF SECTION

©COPYRIGHT 2025 JACOBS

SECTION 31 23 23.15
TRENCH BACKFILL

PART 1 GENERAL

1.01 REFERENCES

A. The following is a list of standards which may be referenced in this section:

1. American Public Works Association (APWA): Uniform Color Code.
2. ASTM International (ASTM):
   a. C33/C33M, Standard Specification for Concrete Aggregates.
   b. C94/C94M, Standard Specification for Ready-Mixed Concrete.
   c. C117, Standard Test Method for Materials Finer than 75 Micrometer (No. 200) Sieve in Mineral Aggregates by Washing.
   d. C136, Standard Test Method for Sieve Analysis of Fine and Coarse Aggregates.
   e. C150/C150M, Standard Specification for Portland Cement.
   f. C618, Standard Specification for Coal Fly Ash and Raw or Calcined Natural Pozzolan for Use in Concrete.
   g. C1012/C1012M, Standard Test Method for Length Change of Hydraulic-Cement Mortars Exposed to a Sulfate Solution.
   h. D698, Standard Test Methods for Laboratory Compaction Characteristics of Soil Using Standard Effort (12,400 ft-lbf/ft^3 (600 kN-m/m^3)).
   i. D1140, Standard Test Methods for Amount of Material in Soils Finer than No. 200 (75 micrometer) Sieve.
   j. D1557, Standard Test Methods for Laboratory Compaction Characteristics of Soil using Modified Effort (56,000 ft-lbf/ft^3 (2,700 kN-m/m^3)).
   k. D2487, Standard Practice for Classification of Soils for Engineering Purposes (Unified Soil Classification System).
   l. D4253, Standard Test Methods for Maximum Index Density and Unit Weight of Soils Using a Vibratory Table.
   m. D4254, Standard Test Methods for Minimum Index Density and Unit Weight of Soils and Calculation of Relative Density.
   n. D4318, Standard Test Methods for Liquid Limit, Plastic Limit, and Plasticity Index of Soils.
   o. D4832, Standard Test Method for Preparation and Testing of Controlled Low Strength Material (CLSM) Test Cylinders.
3. National Electrical Manufacturers Association (NEMA): Z535.1, Safety Colors.

©COPYRIGHT 2025 JACOBS

1.02 DEFINITIONS

A. Bedding Material: Granular material upon which pipes, conduits, cables, or duct banks are placed.

B. Imported Material: Material obtained by Contractor from source(s) offsite.

C. Lift: Loose (uncompacted) layer of material.

D. Pipe Zone: Backfill zone that includes full trench width and extends from prepared trench bottom to an upper limit above top outside surface of pipe, conduit, cable or duct bank.

E. Prepared Trench Bottom: Graded trench bottom after excavation and installation of stabilization material, if required, but before installation of bedding material.

F. Relative Compaction: The ratio, in percent, of the as-compacted field dry density to the laboratory maximum dry density as determined by ASTM D1557 or ASTM D698. Corrections for oversize material may be applied to either as-compacted field dry density or maximum dry density, as determined by Engineer.

G. Relative Density: As defined by ASTM D4253 and ASTM D4254.

H. Selected Backfill Material: Material available onsite that Engineer determines to be suitable for a specific use.

I. Well-graded: A mixture of particle sizes that has no specific concentration or lack thereof of one or more sizes producing a material type that, when compacted, produces a strong and relatively incompressible soil mass free from detrimental voids. Satisfying both of the following requirements, as defined in ASTM D2487:

1. Coefficient of Curvature: Greater than or equal to 1 and less than or equal to 3.
2. Coefficient of Uniformity: Greater than or equal to 4 for materials classified as gravel, and greater than or equal to 6 for materials classified as sand.

1.03 SUBMITTALS

A. Action Submittals:

1. Samples:
   a. Imported material taken at source (each type and source).

©COPYRIGHT 2025 JACOBS

b. Gradation results from material taken at source.
2. Certified test results from independent testing agency.
3. In-place density tests results.

B. Informational Submittals: Catalog and manufacturer's data sheets for compaction equipment.

PART 2 PRODUCTS

2.01 MARKING TAPE

A. Nondetectable:

1. Inert polyethylene, impervious to known alkalis, acids, chemical reagents, and solvents likely to be encountered in soil.
2. Thickness: Minimum 5 mils.
3. Width: 3 inches.
4. Identifying Lettering: Minimum 1-inch high, permanent black lettering imprinted continuously over entire length.
5. Manufacturers and Products:
   a. Reef Industries; Terra Tape.
   b. Mutual Industries; Non-detectable Tape.
   c. Presco; Non-detectable Tape.

B. Detectable:

1. Solid aluminum foil, visible on unprinted side, encased in protective high visibility, inert polyethylene plastic jacket.
2. Foil Thickness: Minimum 0.35 mils.
3. Laminate Thickness: Minimum 5 mils.
4. Width: 3 inches.
5. Identifying Lettering: Minimum 1-inch high, permanent black lettering imprinted continuously over entire length.
6. Joining Clips: Tin or nickel-coated furnished by tape manufacturer.
7. Manufacturers and Products:
   a. Reef Industries; Terra Tape, Sentry Line Detectable.
   b. Mutual Industries; Detectable Tape.
   c. Presco; Detectable Tape.

C. Color: In accordance with APWA Uniform Color Code.

Color*	Facility
Red	Electric power lines, cables, conduit, and lightning cables

©COPYRIGHT 2025 JACOBS

Color*	Facility
Orange	Communicating alarm or signal lines, cables, or conduit
Yellow	Gas, oil, steam, petroleum, or gaseous materials
Green	Sewers and drain lines
Blue	Potable water
Purple	Reclaimed water, irrigation, and slurry lines
*As specified in NEMA Z535.1, Safety Color Code.	

2.02 TRENCH STABILIZATION MATERIAL

A. Structural Fill as defined in Section 31 23 23, Fill and Backfill.

2.03 BEDDING MATERIAL AND PIPE ZONE MATERIAL

A. Unfrozen, friable, and no clay balls, roots, or other organic material.

B. Clean or gravelly sand with less than 5 percent passing No. 200 sieve, as determined in accordance with ASTM D1140, or gravel or crushed rock within maximum particle size and other requirements as follows unless otherwise specified.

1. Duct Banks: 3/4-inch maximum particle size.
2. PVC Irrigation System Piping and Ductile Iron Pipe with Polyethylene Wrap: 3/8-inch maximum particle size.
3. Pipe Under 18-inch Diameter: 3/4-inch maximum particle size, except 1/4 inch for stainless steel pipe, copper pipe, tubing, and plastic pipe under 3-inch diameter.
4. Pipe 18-inch Diameter and Greater: 1-1/2-inch maximum particle size for ductile iron pipe, concrete pipe, welded steel pipe, and pretensioned or prestressed concrete cylinder pipe.
5. Conduit and Direct-buried Cable:
   a. Sand, clean or clean to silty, less than 12 percent passing No. 200 sieve.
   b. Individual Particles: Free of sharp edges.
   c. Maximum Size Particle: Pass a No. 4 sieve.
   d. If more than 5 percent passes No. 200 sieve, the fraction that passes No. 40 sieve shall be nonplastic as determined in accordance with ASTM D4318.

©COPYRIGHT 2025 JACOBS

2.04 EARTHFILL

A. As defined in Section 31 23 23, Fill and Backfill.

2.05 SOURCE QUALITY CONTROL

A. Gradation Tests: In accordance with ASTM C136.

1. As necessary to locate acceptable sources of imported material.
2. During production of imported material, provide one gradation test for each type/source of the imported material.

B. Samples: Collected in accordance with ASTM D75.

1. During production of imported material, provide one sample for each type/source of the imported material .
2. Clearly mark to show source of material and intended use.

PART 3 EXECUTION

3.01 TRENCH PREPARATION

A. Water Control:

1. In accordance with Section 31 24 19.01B Dewatering, promptly remove and dispose of water entering trench as necessary to grade trench bottom and to compact backfill and install manholes, pipe, conduit, direct-buried cable, or duct bank. Do not place concrete, lay pipe, conduit, direct-buried cable, or duct bank in water.
2. Remove water in a manner that minimizes soil erosion from trench sides and bottom.
3. Provide continuous water control until trench backfill is complete.

B. Remove foreign material and backfill contaminated with foreign material that falls into trench.

3.02 TRENCH BOTTOM

A. Firm Subgrade: Grade with hand tools, remove loose and disturbed material, and trim off high areas and ridges left by excavating bucket teeth. Allow space for bedding material if shown or specified.

B. Soft Subgrade: If subgrade is encountered that may require removal to prevent pipe settlement, notify Engineer. Engineer will determine depth of overexcavation, if any required.

©COPYRIGHT 2025 JACOBS

3.03 TRENCH STABILIZATION MATERIAL INSTALLATION

A. Rebuild trench bottom with trench stabilization material.

B. Place material over full width of trench in 6-inch lifts to required grade, providing allowance for bedding thickness.

C. Compact each lift so as to provide a firm, unyielding support for the bedding material prior to placing succeeding lifts.

3.04 BEDDING

A. Furnish imported bedding material where, in the opinion of Engineer, excavated material is unsuitable for bedding or insufficient in quantity.

B. Place over full width of prepared trench bottom in two equal lifts when required depth exceeds 8 inches.

C. Hand grade and compact each lift to provide a firm, unyielding surface.

D. Minimum Thickness: As follows.

1. Pipe 48 Inches and Smaller: 4 inches below pipe and backfilled to a height of 25 percent of the total height of pipe.
2. Conduit: 3 inches.
3. Direct-buried Cable: 3 inches.
4. Duct Banks: 3 inches.

E. Check grade and correct irregularities in bedding material. Loosen top 1 inch to 2 inches of compacted bedding material with a rake or by other means to provide a cushion before laying each section of pipe, conduit, direct-buried cable, or duct bank.

F. Install to form continuous and uniform support except at bell holes, if applicable, or minor disturbances resulting from removal of lifting tackle.

G. Bell or Coupling Holes: Excavate in bedding at each joint to permit proper assembly and inspection of joint and to provide uniform bearing along barrel of pipe or conduit.

©COPYRIGHT 2025 JACOBS

3.05 BACKFILL PIPE ZONE

A. Upper limit of pipe zone shall not be less than following:

1. Pipe: 12 inches, unless shown otherwise.
2. Conduit: 3 inches, unless shown otherwise.
3. Direct-buried Cable: 3 inches, unless shown otherwise.
4. Duct Bank: 3 inches, unless shown otherwise.

B. Restrain pipe, conduit, cables, and duct banks as necessary to prevent their movement during backfill operations.

C. Place material simultaneously in lifts on both sides of pipe and, if applicable, between pipes, conduit, cables, and duct banks installed in same trench.

1. Pipe 10-inch and Smaller Diameter: First lift less than or equal to 1/2 pipe diameter.
2. Pipe Over 10-inch Diameter: Maximum 6-inch lifts.

D. Thoroughly tamp each lift, including area under haunches, with handheld tamping bars supplemented by “walking in” and slicing material under haunches with a shovel to ensure voids are completely filled before placing each succeeding lift.

E. Each lift shall be compacted with a minimum of two passes by either a vibratory plate compactor or a power-driven impact compactor. Take care to avoid damaging pipe and pipe coating.

3.06 MARKING TAPE INSTALLATION

A. Continuously install marking tape along centerline of buried piping, as shown on Drawings. Coordinate with piping installation drawings.

1. Detectable Marking Tape: Install with nonmetallic piping and waterlines.
2. Nondetectable Marking Tape: Install with metallic piping.

3.07 BACKFILL ABOVE PIPE ZONE

A. General:

1. Process excavated material to meet specified Earthfill requirements.
2. Adjust moisture content as necessary to obtain specified compaction.
3. Do not allow backfill to free fall into trench or allow heavy, sharp pieces of material to be placed as backfill until after at least 2 feet of backfill has been provided over top of pipe.

©COPYRIGHT 2025 JACOBS

4. Do not use power driven impact type compactors for compaction until at least 4 feet of backfill is placed over top of pipe.
5. Backfill to grade with proper allowances for surfacing material, wherever applicable.
6. Backfill around structures with same backfill as specified for adjacent trench, unless otherwise shown or specified.

B. Backfill Placement and Compaction:

1. Place in lifts not exceeding thickness of 6 inches.
2. Mechanically compact each lift to a minimum of 92 percent relative compaction as determined in accordance with ASTM D1557, prior to placing succeeding lifts.

3.08 SITE TESTING

A. Gradation: Gradation Test in accordance with ASTM C136.

1. At least one test per each stockpile of excavated material to be used as Earthfill.

B. Proctor Test: Proctor Test in accordance with ASTM D1557.

1. At least one test per each stockpile of excavated material to be used as Earthfill.

C. In-place Density Tests: In accordance with ASTM D6938. During placement of materials, test as follows:

1. Trenches: for each pipe or conduit trench, perform 2 tests at every 2 vertical feet of backfill.

3.09 MAINTENANCE OF TRENCH BACKFILL

A. After each section of trench is backfilled, maintain surface of backfilled trench even with adjacent ground surface until final surface restoration is completed.

B. Gravel Surfacing Rock: Add gravel surfacing rock where applicable and as necessary to keep surface of backfilled trench even with adjacent ground surface, and grade and compact as necessary to keep surface of backfilled trenches smooth, free from ruts and potholes, and suitable for normal traffic flow.

C. Topsoil: Add topsoil where applicable and as necessary to maintain surface of backfilled trench level with adjacent ground surface.

©COPYRIGHT 2025 JACOBS

D. Concrete Pavement: Replace settled slabs as specified in Section 32 12 16, Asphalt Paving.

E. Asphaltic Pavement: Replace settled areas or fill with asphalt as specified in Section 32 12 16, Asphalt Paving.

F. Other Areas: Add excavated material where applicable and keep surface of backfilled trench level with adjacent ground surface.

3.10 SETTLEMENT OF BACKFILL

A. Settlement of trench backfill, or of fill, or facilities constructed over trench backfill will be considered a result of defective compaction of trench backfill.

END OF SECTION

©COPYRIGHT 2025 JACOBS

SECTION 31 41 00
SHORING

PART 1 GENERAL

1.01 WORK INCLUDED

A. This section addresses excavation support system requirements for all excavations.

B. The Contractor shall design and construct the excavation support system in accordance to the design criteria and performance requirements specified in this section. The Contractor shall submit engineering calculations, shop drawings, and excavation support plan to the Engineer for review and approval.

C. The Contractor is responsible for selecting and layout the excavation support system within work area and not in conflict with any utilities and underground structures.

D. For all excavations requiring excavation support system, driven or vibration installed elements (such as driven or vibration installed sheet piles) are not permitted due to presence of cobbles, boulders, and high-blow-count material.

1.02 REFERENCES

A. The publications listed below form part of this Specification to the extent referenced. Where conflicts between these Specifications and the reference specification, code, or standard occur, the more restrictive specification shall govern.

1. Occupational Safety and Health Administration (OSHA): Regulations and Standards for Underground Construction, 29 CFR Part 1926, Subpart S, Underground Construction, and Subpart P, Excavations.

1.03 SUBMITTALS

A. Action Submittals: All submittals shall be action submittals.

B. Submit qualification documents showing personnel experience complying with Article Qualifications.

C. All submittals shall be prepared and stamped by the Contractor’s engineer.

©COPYRIGHT 2025 JACOBS

D. Excavation Support Plan (for both trenches and work shafts): Prepare excavation support plan addressing the following topics.

1. Shop drawings of excavation support systems.
2. Details of shoring, bracing, sloping, or other provisions for worker protection from hazards of caving ground.
3. Design assumptions and calculations.
4. Equipment loading information (manufacture cut sheet) and resulting surcharge pressure calculation.
5. Methods and sequencing of excavation and installation of excavation support.
6. Protection of existing facilities including underground utilities during construction.
7. Anticipated difficulties and proposed resolutions.
8. Method and sequencing of backfilling and removing excavation support after construction of permanent works.

E. Monitoring Plan (at request of Engineer):

1. Surveyor's license.
2. Pre-construction assessment report prior to start of any construction or dewatering activities.
3. Shop drawing detailing locations (coordinates), depths, types, and other pertinent information showing installation details for each type of instrumentation required.
4. Shop drawing that indicates locations of control points and benchmarks associated with surveys for monitoring points.
5. Installation plan including installation steps, installation schedule, and baseline schedule.

F. Monitoring Data Reporting (at request of Engineer):

1. Submit monitoring data in an organized format, including comparison to initial readings and warning limit established herein.
2. Submit readings approaching limits immediately to the Engineer.
3. Submit a weekly summary of monitoring data with construction activity summary for each working day.

G. Contingency Plan: The Contractor shall submit contingency plan for dealing with each of the following scenarios:

1. Unable to advance excavation support system installation.
2. Excessive ground or structure movement.
3. Excessive groundwater inflow.

©COPYRIGHT 2025 JACOBS

H. Qualifications The Contractor’s engineer shall be a Professional Engineer registered in State of Connecticut, and shall have at least 10 years of experience in the design of excavation support systems for excavation of similar size and depth and in subsurface conditions as the Work herein.

1.04 DESIGN CRITERIA

A. All ground support system elements including sheeting, shoring, and bracing of excavations shall conform to the requirements of Subpart P, Excavations (1926.650 of 29 CFR) of the Occupational Safety and Health Administration (OSHA).

B. Design shall meet requirements for control of water as specified in Section 31 23 19.01, Dewatering. The design shall be compatible with the Contractor’s selected methods of excavation.

C. Design shall provide for placement of initial support systems and removal of initial support systems. The design shall provide for construction of the permanent Work, and all other construction operations and requirements.

D. For prefabricated systems, the soil shall be assumed to be Type C per OSHA requirements.

E. Design excavation support system to properly support any building foundation elements within excavation zone of influence (1H:1V envelope from bottom edge of excavation).

F. A minimum surcharge of 400 psf or per actual equipment loading pressure, whichever is greater, shall be incorporated in the design.

G. Design the excavation support systems such that the maximum vertical or lateral movement is 0.5 inch at the nearest structure, utility, or pipe.

H. Design the excavation support system such that the maximum lateral deflection of the excavation support system itself does not exceed 1 inch.

I. Design each member or support element to support the maximum loads that can occur during construction. The maximum stresses on all structural members, when subjected to maximum combination of loads or stresses, shall not exceed 67 percent of the ultimate strength.

J. Under any combination of loads, the allowable stress shall not exceed 67% of each structural element's yield strength.

©COPYRIGHT 2025 JACOBS

K. Design support system to maintain stability of the excavation against bottom heave. Provide a minimum factor of safety against bottom heave due to adjacent surcharge pressures and hydrostatic uplift pressures or upward seepage pressures of 1.5.

L. Design support system to maintain a minimum factor of safety of 1.3 against global stability.

M. Employ combinations of walers, struts, and beams for bracing and lateral support as required to support excavation faces and control groundwater and prevent loss of ground with suitable ground support system.

PART 2 PRODUCTS (NOT USED)

PART 3 EXECUTION

3.01 GENERAL

A. Design, provide, and maintain shoring, sheeting, and bracing as necessary to support the sides of excavations and to prevent detrimental settlement and lateral movement of existing facilities, adjacent property, and completed the Work.

B. Maintain tight contact between supported ground and the excavation support system. Any voids produced behind a temporary excavation support system wall shall be backfilled immediately with grout or granular material approved by the Engineer.

C. If excavation becomes unstable at any time, stop excavating and temporarily stabilize the excavation by immediately placing an earth berm up against the unstable excavation face or by adding additional excavation support system elements. Do not continue with excavation until design revisions and mitigation plans are submitted, reviewed and accepted by the Owner and the Engineer.

D. Sequence of excavation work and support of excavation system installation shall be performed in accordance with the approved shop drawings.

3.02 DEWATERING

A. Design and operation of the dewatering system is the sole responsibility of the Contractor and shall be designed, installed, and operated in accordance with Section 31 23 19.01, Dewatering.

©COPYRIGHT 2025 JACOBS

3.03 MOVEMENT MONITORING PLAN

A. All monitoring shall be performed at request of Engineer by Contractor's surveyor who are a licensed surveyor registered in State of Connecticut.

B. Monitoring Location:

C. The movement monitoring points shall be approved by Engineer. Monitoring Threshold:

1. Accuracy of both vertical and horizontal monitoring for movement monitoring points shall be a minimum of 1/8 inch.
2. The warning limit is 0.5 inch for movement monitoring points.

D. Monitoring Frequency:

1. Monitor the points once per day during active excavation.
2. Monitor the points once per week during all other activities of the construction.

3.04 REMOVAL OF EXCAVATION SUPPORT

A. Remove excavation support in a manner that will maintain support as excavation is backfilled.

B. Do not begin to remove excavation support until support can be removed without damage to existing facilities, completed Work, or adjacent property.

C. Remove excavation support in a manner that does not leave voids in the backfill.

D. Excavation support shall be cut-off at 5 feet below grade. All excavation support system within 5 feet from grade shall be fully removed. All lagging boards/plates at any depth shall be fulling removed.

3.05 TRENCHES

A. In addition to above requirements in this Specification Section, for trench excavation exceeding 5 feet in depth, provide adequate safety system meeting requirements of applicable state and local construction safety orders, and federal requirements.

END OF SECTION

©COPYRIGHT 2025 JACOBS

SECTION 32 11 23
AGGREGATE BASE COURSE

PART 1 GENERAL

1.01 REFERENCES

A. The following is a list of standards which may be referenced in this section:

1. ASTM International (ASTM):
   a. C29, Standard Test Method for Bulk Density (Unit Weight) and Voids in Aggregate.
   b. C88, Test Method for Soundness of Aggregates by Use of Sodium Sulfate or Magnesium Sulfate.
   c. C117, Standard Method of Test for Materials Finer Than 75µm (No. 200) Sieve in Mineral Aggregates by Washing.
   d. C131, Standard Specification for Resistance to Degradation of Small-Size Coarse Aggregate by Abrasion and Impact in the Los Angeles Machine.
   e. C183, Standard Method of Test for Sieve Analysis of Fine and Coarse Aggregates.
   f. D698, Standard Test Methods for Laboratory Compaction Characteristics of Soil Using Standard Effort (12,400 ft-lb/ft^3 (600 kN-m/m^3)).
   g. D1557, Standard Test Methods for Laboratory Compaction Characteristics of Soil Using Modified Effort (56,000 ft-lb/ft^3 (2700 kN-m/m^3)).
   h. D1883, Test Method for CBR (California Bearing Ratio) of Laboratory Compacted Soils.
   i. D2216, Standard Methods for Laboratory Determination of Water (Moisture) Content of Soil and Rock by Mass.
   j. D2419, Test Method for Sand Equivalent Value of Soils and Fine Aggregate.
   k. D2844, Standard Specification for Resistance R-Value and Expansion Pressure of Compacted Soils.
   l. D4318, Standard Test Methods for Liquid Limit, Plastic Limit and Plasticity Index of Soils.
   m. D4791, Test Method for Flat Particles, Elongated Particles, or Flat and Elongated Particles in Coarse Aggregate.
   n. D5195, Standard Test Methods for Density of Soil and Rock In-Place Below Surface by Nuclear Methods.

©COPYRIGHT 2025 JACOBS

o. D6938, Standard Test Method for In-Place Density and Water Content of Soil and Soil-Aggregate by Nuclear Methods (Shallow Depth).

1.02 DEFINITIONS

A. Base Course: Processed stone base or similar as specified placed and compacted on prepared subgrade or subbase course.

B. Completed Course: Compacted, unyielding, free from irregularities, with smooth, tight, even surface, true to grade, line, and cross-section.

C. Completed Lift: Compacted with uniform cross-section thickness.

D. Gravel Surfacing: Aggregate used for construction of low-volume access and staging area that can be easily graded and compacted.

E. Leveling Course: Crushed aggregate placed and compacted on base course to be used for finish grading.

F. Subbase Course: Sandy, gravelly material placed and compacted on prepared subgrade.

1.03 SUBMITTALS

A. Action Submittals:

1. Samples: Submit for specified materials 20 days prior to delivery to Site.

B. Informational Submittals:

1. Certified Test Results on Source Materials: Submit copies from commercial testing laboratory 20 days prior to delivery of materials to Project showing materials meeting the physical qualities specified.
2. Certified results of in-place density tests from independent testing agency.

PART 2 PRODUCTS

2.01 BASE COURSE

A. Clean, hard durable, pit run gravel or crushed stone graded from coarse to fine containing enough fines to bind material when compacted.

©COPYRIGHT 2025 JACOBS

B. Physical Qualities:

1. Abrasion, ASTM C131: 35 percent maximum wear.
2. Fractured Face: 75 percent minimum particles.
3. Liquid Limit, ASTM D4318: Maximum 30 percent.
4. Plasticity Index, ASTM D4318: Maximum 6 percent.
5. Sand Equivalency, ASTM D2419: 35 percent, minimum.
6. Resistance (R) Value, ASTM D2844: 75, minimum.
7. CBR Value, ASTM D1883: 100 percent, minimum.
8. Soundness, ASTM C88: 12 percent, maximum.
9. Flat and Elongated Particles, ASTM D4791: 8 percent, maximum.

C. Gradation, ASTM C183 and ASTM C117, Based on U.S. Standard Sieves:

Table 1
Gradation
Percent Passing by Weight

Sieve Designation (Square Opening)	Material Aggregate Base Course
2"	95 to 100
3/4"	50 to 75
1/4"	25 to 45
No. 40	5 to 20
No. 100	2 to 12

2.02 SOURCE QUALITY CONTROL

A. Perform tests necessary to locate acceptable source of materials meeting specified requirements.

B. Final approval of aggregate material will be based on test results of installed materials.

C. Should separation of coarse from fine materials occur during processing or stockpiling, immediately change methods of handling materials to correct uniformity in grading.

©COPYRIGHT 2025 JACOBS

PART 3 EXECUTION

3.01 EQUIPMENT

A. Compaction Equipment: Adequate in design and number to provide compaction and to obtain specified density for each layer.

3.02 HAULING AND SPREADING

A. Hauling Materials:

1. Do not haul over surfacing in process of construction.
2. Loads: Of uniform capacity.
3. Maintain consistent gradation of material delivered; loads of widely varying gradations will be cause for rejection.

B. Spreading Materials:

1. Distribute material to provide required density, depth, grade, and dimensions with allowance for subsequent lifts.
2. Produce even distribution of material upon roadway or prepared surface without segregation.
3. Should segregation of coarse from fine materials occur during placing, immediately change methods of handling materials to correct uniformity in grading.

3.03 CONSTRUCTION OF COURSES

A. Base Course:

1. Maximum Completed Lift Thickness: 4 inches.
2. Completed Course Total Thickness: 12 inches.
3. Spread lift on preceding course to required cross-section.
4. Lightly blade and roll surface until thoroughly compacted.
5. Add keystone to achieve compaction and as required when aggregate does not compact readily because of lack of fines or natural cementing properties, as follows:
    a. Use leveling course or surfacing material as keystone.
    b. Spread evenly on top of base course, using spreader boxes or chip spreaders.
    c. Roll surface until keystone is worked into interstices of base course without excessive displacement.
    d. Continue operation until course has become thoroughly keyed, compacted, and will not creep or move under roller.
6. Blade or broom surface to maintain true line, grade, and cross-section.

©COPYRIGHT 2025 JACOBS

3.04 ROLLING AND COMPACTION

A. Commence compaction of each layer of base course after spreading operations and continue until density of 95 percent of maximum density has been achieved as determined by ASTM D698 or ASTM D1557.

B. Roll each layer of material until material does not creep under roller before succeeding layer is applied.

C. Commence rolling at outer edges and continue toward center; do not roll center of road first.

D. Apply water as needed to obtain specified densities.

E. Place and compact each lift to the required density before succeeding lift is placed.

F. Remove floating or loose stone from surface of preceding course before placing leveling course.

G. Surface Defects: Remedy by loosening and rerolling. Reroll entire area, including surrounding surface, until thoroughly compacted.

H. Finished surface shall be true to grade and crown before proceeding with surfacing.

3.05 SURFACE TOLERANCES

A. Blade or otherwise work surfacing as necessary to maintain grade and cross-section at all times, and to keep surface smooth and thoroughly compacted.

B. Finished Surface of Untreated Aggregate Base Course: Within plus or minus 0.04 foot of grade shown at any individual point.

3.06 DRIVEWAY RESURFACING

A. Replace gravel surfacing on driveways that were gravel surfaced prior to construction.

B. Provide compacted gravel surfacing to depth equal to original, but not less than 4 inches.

C. Leave each driveway in as good or better condition as it was before start of construction.

©COPYRIGHT 2025 JACOBS

3.07 FIELD QUALITY CONTROL

A. In-place Density Tests:

1. Provide Engineer at least 2 hours' advance notification prior to testing.
2. Show proof that areas meet specified requirements before identifying density test locations.
3. Refer to Table 2 for minimum sampling and testing requirements for aggregate base course and surfacing.

Table 2
Minimum Sampling and Testing Requirements

Property	Test Method	Frequency	Sampling Point
Gradation	ASTM C117 and ASTM C183	One sample every 500 tons but at least every 4 hours of production	Roadbed after processing
Moisture density (maximum density)	ASTM D1557 and ASTM D698, Method D	One test for every aggregate grading produced	Production output or stockpile
In-place density and moisture content	ASTM D5195, ASTM D6938, and ASTM D2216 for moisture content	One for each 500 ton but at least every 10,000 square feet of area	In-place completed, compacted area

3.08 CLEANING

A. Remove excess material from the Work area. Clean stockpile and staging areas of all excess aggregate.

END OF SECTION

©COPYRIGHT 2025 JACOBS

SECTION 32 12 00
TEMPORARY AND PERMANENT PAVEMENT RESTORATION

PART 1 GENERAL

1.01 DESCRIPTION

A. Scope of Work:

1. Contractor shall furnish and install all base and surfacing materials for temporary and permanent paved surfaces for roads, driveways, sidewalks, curbs, etc. required for excavation repairs as shown on the Contract Drawings, complete as shown, specified or directed.
2. The Work includes, as shown, specified or directed, transporting materials, clearing, excavation, disposing of unused excavated materials, placing and consolidating base material, installing concrete roadbase and pavement, placing and compacting bituminous road, sidewalk and driveway surfaces, replacing concrete sidewalks, drives, curbs, etc., replacing bituminous curbing, resetting or replacing stone curbing and all incidental work, all to approved grades and as specified, except as otherwise provided for.

1.02 QUALITY ASSURANCE/EQUIPMENT

A. All permanent repairs to be completed under the Contract shall be done by a paving contractor (Individual, Partnership or Corporation) who has regularly engaged in the construction of curbs, walks and/or roadways for the last two (2) years and has filed a satisfactory Performance Bond and Insurance as may be required by the Owner or state authority having jurisdiction.

B. Permanent pavement repairs or trench restoration shall be completed by use of a mechanical paver unless specific exception is granted by the Engineer or the Owner and/or state authority.

C. The requirements herein shall in no manner relieve the Contractor of full responsibility for all pavement and trench restoration work to be performed under this Contract nor shall the requirements invalidate any of each and every other right the Owner has under this Contract or bylaw.

D. All necessary equipment, components and accessories to complete the Work as anticipated in the Contract Drawings and as specified or as ordered by the Engineer shall be available for use on the project. All equipment used on the project work shall be used in conformance with the manufacturer's recommendations of use and shall be in good operating condition.

©COPYRIGHT 2025 JACOBS

E. All pavement placed shall be maintained by the Contractor for a period of 1 year. During this period, all areas which have settled or are unsatisfactory for traffic shall be refilled and replaced by the Contractor at no additional expense to the Owner.

1.03 REFERENCES

A. The following standards based on the latest edition form a part of this specification as referenced:

1. Section 2.12, CONN DOT FORM 818 – Subbase
2. Section 2.13, CONN DOT FORM 818 – Granular Fill
3. Section 2.14, CONN DOT FORM 818 – Compacted Granular Fill
4. Section 3.04, CONN DOT FORM 818 – Processed Aggregate Base
5. Section 4.06, CONN DOT FORM 818 – Bituminous Concrete
6. Section 8.11, CONN DOT FORM 818 – Concrete Curbing
7. Section 6.02, CONN DOT FORM 818 – Reinforcing Steel
8. Section 8.13, CONN DOT FORM 818 – Stone Curbing
9. Section 8.14, CONN DOT FORM 818 - Reset Stone Curbing
10. Section 8.15, CONN DOT FORM 818 - Bituminous Concrete Lip Curbing
11. Section 9.21, CONN DOT FORM 818 – Concrete Sidewalks
12. Section 9.22, CONN DOT FORM 818 - Bituminous Concrete Sidewalk, Bituminous Concrete Driveways
13. Article M.02.01, CONN DOT FORM 818 – Granular Fill
14. Article M.02.02, CONN DOT FORM 818 – Compacted Granular Fill
15. Article M.02.02 & M.02.06, CONN DOT FORM 818 – Subbase
16. Section M.03, CONN DOT FORM 818 – Portland Cement Concrete
17. Section M.04, CONN DOT FORM 818 - Bituminous Concrete Materials
18. Article M.05.01, CONN DOT FORM 818 – Processed Aggregate Base
19. Article M.12.06, CONN DOT FORM 818 -Stone Curbing
20. Article M.06.01.3, CONN DOT FORM818 -Wire and Welded Steel Wire Fabric

B. Standard Specifications: When referenced in this section shall mean the State of Connecticut, Department of Transportation, Standard Specifications for Roads, Bridges, Facilities and Incidental Construction, Form 818.

C. CONN DOT FORM 818: When referenced in this section shall mean the State of Connecticut, Department of Transportation, Standard Specifications for Roads, Bridges, Facilities and Incidental Construction, Form 818.

©COPYRIGHT 2025 JACOBS

1.04 SUBMITTALS

A. Informational Submittals:

1. In accordance with the General Conditions and Section 01 33 00, the following information shall be submitted for approval:
   a. Name and address of Contractor's paving Sub-Contractor (if any)
   b. Names and addresses of materials suppliers.
   c. Any technical information for Engineer's approval of alternate methods and materials.

PART 2 PRODUCTS

2.01 SUBBASE

A. Subbase material shall conform to the requirements of Article M.02.02, CONN DOT FORM 818.

2.02 PROCESSED AGGREGATE BASE

A. Base material shall conform to the requirements of Article M.05.01, CONN DOT FORM 818.

2.03 CONCRETE

A. Concrete for road repairs shall conform to the requirements of Section M.03, CONN DOT FORM 818.

2.04 REINFORCING STEEL

A. Reinforcing steel shall conform to the requirements of Article M.06.01, CONN DOT FORM 818.

2.05 BITUMINOUS CONCRETE MATERIALS

A. Bituminous concrete, tack coat, joint sealer, etc., for road repairs shall conform to the requirements of Section M.04, CONN DOT FORM 818.

2.06 OTHER MATERIALS

A. Other materials required for repairs to driveways, curbs, and sidewalks shall be as specified under the various CONN DOT FORM 818 Sections referenced for the item to be repaired.

©COPYRIGHT 2025 JACOBS

PART 3 EXECUTION

3.01 GENERAL

A. Traffic Control:

1. In accordance with Section 01 50 00, Temporary Facilities and Controls.
2. Minimize inconvenience to traffic, but keep vehicles off freshly treated or paved surfaces to avoid pickup and tracking of asphalt.

B. All paved surfaces, including roads, driveways and sidewalks, bituminous curbs, and similar structures which are in any way disturbed by the Work shall be replaced or repair, meeting conditions that existed prior to beginning the Work. New material shall be supplied to replace that lost or damaged. All Work shall conform to the Contract Documents.

C. Notice of the date and location of all permanent paving repair and restoration work shall be given to the Owner or state authorities at least twenty-four (24) hours before the work is started.

D. Whenever the subbase becomes dry enough to cause dust problems, apply water or spread calcium chloride uniformly over the gravel surface in sufficient quantity to eliminate the dust.

E. When the air temperature falls below 50 degrees F, extra precautions shall be taken in drying the aggregates and controlling the temperature of the materials, before placing and compacting the mixture.

F. No mixture shall be placed when the air temperature is below 40 degrees F, or when the material on which they are placed contains frost, or has a surface temperature not suitable to the Engineer.

G. No vehicular traffic or loads shall be permitted on the newly completed pavement until adequate stability has been attained and the material has cooled sufficiently to prevent distortion or loss of fines. If the climatic or other conditions warrant it, the period of time before opening to traffic may be extended at the discretion of the Engineer.

3.02 PAVED SURFACE REPAIRS

A. Pavement Restoration

1. Pavement structure shall be as shown on the Contract Drawings and Details.

©COPYRIGHT 2025 JACOBS

2. Subgrade shall conform to Section 31 23 15 of this Specification.
3. Compacted Granular fill shall conform to Section 2.14 of the Standard Specification.
4. Processed Aggregate Base shall conform to Section 3.04 of the Standard Specification.
5. Bituminous Asphalt shall conform to Section 9.02 of the Standard Specification.
6. Processed aggregate base shall be placed in 4-inch lifts, 20-inches below grade.

B. If, as a result of performing the Work, the pavement outside the trench area and/or the shoulder of the road is damaged, the damaged areas shall be repaired.

1. The pavement shall be replaced as indicated herein. The unpaved shoulder shall be restored to the condition that existed prior to the beginning of the Work.
2. If pavement in the state ROW is damaged, Contractor shall coordinate the work with the Connecticut Department of Transportation.

C. Concrete base shall be repaired in conformance with the Contract Drawings and Details.

3.03 PERMANENT PRIVATE DRIVEWAY REPAIRS

A. Paved driveways which are cut or damaged longitudinally by trenching shall be repaved to their full width for the length so damaged. Driveways cut or damaged transversely shall be repaved to their full width from, and including, the area of damage to the street end of the paved surface.

B. Bituminous concrete driveways removed, damaged or otherwise affected by the Contractor's operations shall be replaced in accord with the requirements of Section 9.22-Bituminous Concrete Driveway, CONN DOT FORM 818. The thickness of materials shall be the same as that of the materials being replaced, except that the base shall be at least 6-inches thick and the bituminous concrete shall be at least 2-inches thick after compaction.

C. Concrete driveways removed, damaged or otherwise affected by the Contractor's operations shall be replaced, in general, in accord with the requirements for bituminous concrete driveways. Concrete shall be the same thickness as that removed, but in no case shall the concrete be less than 6-inches thick. Reinforcing steel shall be equivalent or better than that removed.

D. Non-paved driveways shall be repaired using materials equivalent to or better than those removed and of the same thickness.

©COPYRIGHT 2025 JACOBS

3.04 PERMANENT CURB REPAIRS

A. Contractor to work in a manner that will leave existing curb undisturbed unless directed by the engineer to do otherwise.

B. Concrete, stone or bituminous concrete curbing that is removed, damaged or otherwise affected by the Contractor's operations shall be replaced in kind and in accordance with the requirements of Section 8.11-Concrete Curbing, Section 8.13-Stone Curbing, or Section 8.15-Bituminous Concrete Lip Curbing, all of CONN DOT FORM 818, as applicable. Resetting stone curbing shall be in accordance with the requirements of Section 8.14-Reset Stone Curbing, CONN DOT FORM 818. All curbing shall conform to the dimensions of the replaced or adjacent curbing unless directed otherwise by the Engineer.

3.05 SIDEWALK REPAIRS

A. The sidewalks shall be installed in accordance Section 9.21 of the Standard Specifications.

3.06 PAVEMENT MARKINGS

A. Reline all streets with pavement markings equal in type and location where existing prior to paving.

B. Where pavement markings have been removed as a result of construction operations, the Contractor shall repaint markings within ten days after placement of initial paving, and maintain temporary pavement markings until final paving is completed.

C. Restore pavement markings after:

1. Installation of temporary pavement trench repair.
2. Installation of permanent pavement trench repair.
3. Installation of permanent pavement full-width overlay.

D. Temporary and permanent pavement markings shall match the existing layout of markings.

E. Traffic markings shall be installed in accordance with Section 32 17 23, Pavement Markings.

©COPYRIGHT 2025 JACOBS

3.07 ADJUSTING EXISTING MANHOLE AND VALVE ELEVATIONS

A. Adjust the elevations of existing manhole frames and covers and valve boxes as a result of road or sidewalk regrading.

B. Adjustments to manhole frames and covers to be made by using manhole adjusters acceptable to the Owner or the affected utility.

C. Castings owned by private utilities shall be raised by their own forces and the Contractor shall be responsible for coordinating this work.

D. The method of adjusting castings shall be as follows:

1. Cut around catch basin or manhole castings a minimum of 8-inches from casting using a circular cutter.
2. Excavate, and if required, rebuild up to 12-inches of masonry below the bottom of the casting.
3. Backfill with suitable material and compact to bottom of casting.
4. Place high, early strength cement or bituminous concrete collar, as directed, to approximately 2 inches below the raised casting grade.

E. The method of raising valve boxes shall be as follows:

1. Cut around valve box a minimum of 8-inches from valve box.
2. Excavate as required and raise the valve box.
3. Pour high early strength cement or bituminous concrete collar, as directed, to approximately 2 inches below the top of the valve box.

F. Castings which need to be raised or adjusted to complete permanent curb to curb paving shall be done immediately prior to paving.

END OF SECTION

©COPYRIGHT 2025 JACOBS

SECTION 32 12 16
BITUMINOUS ASPHALT PAVING AND RESTORATION

PART 1 GENERAL

1.01 DESCRIPTION

A. Furnish and construct new driveways as indicated on Drawings and specified.

B. Furnish and construct access roads parking areas, as indicated on Drawings and specified.

C. Furnish and install incidental items including: Guard posts.

1.02 RELATED WORK

A. Section 31 23 23.15, Trench Backfill.

B. Section 32 11 23, Aggregate Base Couses.

1.03 REFERENCES

A. Materials and construction shall comply with the Standard Specification for Roads, Bridges and Incidental Construction, State of Connecticut Department of Transportation, Form 818 as amended and supplemented. (Referred to herein as The Standard Specification or Standard Specifications).

B. Current version of American Society for Testing and Materials (ASTM) Publications:

1. C136: Sieve Analysis of Fine and Coarse Aggregates.
2. D75: Sampling Aggregates.
3. D 1140: Amount of Materials in Soils Finer Than the No. 200 Sieve.
4. DI 556: Density and Unit Weight of Soil in Place by the Sand-Cone.
5. D 1557: Laboratory Compaction Characteristics of Soil Using Modified Effort.
6. D2172: Quantitative Extraction of Bitumen from Bituminous Paving Mixtures.
7. D2726: Bulk Specific Gravity and Density of Compacted Bituminous Mixtures Using Saturated Surface - Dry Specimens.
8. D2922: Density of Soil and Aggregate in Place by Nuclear Methods (Shallow Depth).
9. D3071: Water Content of Soil and Rock in P lacc by Nuclear Methods (Shallow Depth).

10. D3405: Joint Sealants, Hot-poured, for Concrete and Asphalt Pavements.

1.04 QUALITY ASSURANCE

A. Engineer reserves the right to inspect at any time, the plant producing the paving material for plant conditions and operations, adequacy of equipment, accuracy of scales, temperature, character and proportions of the mixture, aggregates and bitumen and related production procedures.

B. Weather Limitations:

1. Conform to the Standard Specification for bituminous course.
2. Do not construct base course, or sub grade when ambient air temperature is 40 deg. F and falling.
3. The field and laboratory testing of paving materials and frequency shall be in accordance with Standard Specification.

1.05 SUBMITTALS

A. Submit the following prior to placing base course, tack coat or bituminous mixtures.

1. Certification that plant supplying paving material will comply with the Standard Specification.
2. Batch plant slips with each load of bituminous mixture stating the weight delivered, the mix proportions by weight, and the mix and asphalt cement temperature at the time of batching.
3. Test results from an independent testing laboratory certifying that sub grade, base and bituminous mixture aggregates comply with the Standard Specifications.
4. Test certificates from the Supplier indicating that asphalt cement and tack coat materials comply with specifications.
5. Test results from an independent testing laboratory indicating that bituminous mixtures comply with specifications, signed by an officer of bituminous mixture Supplier.
6. Schedule of construction for roadways.
7. Particle-size distribution and moisture-density relations of the processed gravel base and subbase courses tested in accordance with ASTM C 136, ASTM DI 140 and ASTM 1)1557.

1.06 DELIVERY, STORAGE, AND HANDLING OF BITUMINOUS MATERIALS

A. Transport and deliver hot mix bituminous concrete in accordance with the Standard Specification. Do not use diesel fuel as a lubricant.

PART 2 PRODUCTS

2.01 DRIVEWAY AND ROADWAY BINDER COURSE

A. 2-inch, hot mixture, bituminous concrete.

B. Materials and methods of construction for binder course conform to Section 4.06, of the Standard Specifications, the binder curse being Class 1.

2.02 DRIVEWAY AND ROADWAY TOP COURSE

A. 2-inch, hot mixture, bituminous concrete.

B. Materials and methods of construction for surface course conform to Section 4.06, Bituminous Concrete, Class 2 of the Standard Specifications.

2.03 TACK COAT

A. Tack coat shall conform to the requirements of Section M.05.02 of the Standard Specification.

PART 3 EXECUTION

3.01 GENERAL

A. Provide material, equipment, and labor to construct roadways, walkways and parting area specified and indicated.

B. Protect and leave in clean condition manhole covers, catch basin grates, valve and meter boxes, curbs, walks and walls.

C. Provide interface with existing roadways as indicated and specified.

D. Adjust grates, manhole covers, catch basin grates, valve boxes, cathodic test station boxes and similar items to conform with pavement grade.

E. Surface of base course shall remain in the as-placed condition until pavement is placed.

F. Prior to placing bituminous concrete, sweep clean to satisfaction of Engineer all surfaces on which new pavement or tack coat is to be placed.

G. Repair existing paved areas damaged by the Contractor's construction activities with temporary paving final roadway is to be constructed.

H. Apply tack coat only when the surface to receive the tack coat is dry, the atmospheric temperature in the shade is 40 degrees F or above and when the temperature has not been below 35 degrees F for the 12 hours prior to application. Apply at the rate of 0.05 to 0.15 gallons per square yard as directed by the Engineer. Apply at a temperature between 70 and 140 degrees F. Provide certified waybills and delivery tickets during progress of the work. As a prelude to providing complete tack, tack 200 feet for the full width of the spray bar as a trial section to evaluate the amount of tack that can be satisfactorily applied. Tack the trial section at the rate of 0.05 gals per square yard unless otherwise directed by the Engineer. Blot up any excess tack coat with clean dry sand. Allow tack to obtain evaporation of moisture prior to paving. Tack coat to be applied to all manhole frames and adjacent surfaces that come in contact with new bituminous asphalt paving.

3.02 SUBBASE COURSE

A. Place on top of compacted subgrade, 12-inches of subbase, as measured after compaction, in two equal layers.

B. Place the base course to an elevation below the indicated finished grade a distance equal to the depth of the asphalt pavement to be placed on the gravel base within tolerances specified in the Standard Specification.

C. Place and compact base course to indicated thickness in 4-in. lifts compacted to 95 percent density.

3.03 BASE COURSE

A. Place on top of compacted subbase, 6 inches of processed aggregate base course, as measured after compaction, in two equal layers.

B. Place the base course to an elevation below the indicated finished grade a distance equal to the depth of the asphalt pavement to be placed on the gravel base within tolerances specified in the Standard Specification.

C. Place and compact base course to indicated thickness in 3-in. lifts compacted to 95 percent density.

3.04 BITUMINOUS CONCRETE PAVEMENT

A. Construct roadway pavements to grades, smoothness specified in the Standard Specification and to a grade tolerance of 0.05 feet.

B. At roadway interfaces, sawcut existing pavement edges for bonding with new pavement and paint vertical face with tack coat material. Allow time for tack coat to cure before paving.

C. Place Class I and Class 2 Bituminous Concrete, in accordance with the Standard Specification.

D. Place and compact 2-inch binder course and 2-inch top course, and compact to the final elevation.

E. Installation of curb shall be in accordance with Section 8.15 of the Standard Specification.

3.05 FIELD TESTING

A. Measure thickness, grade, and smoothness of all courses placed in accordance with the Standard Specifications.

3.06 SURFACE MAINTENANCE

A. Until the expiration of the guarantee period, maintain surfacing placed under this contract and promptly correct any defect such as cracks, depressions, and holes that may occur. Surfacing kept in a safe and satisfactory condition for traffic. If defects occur in surfacing constructed by Contractor, remove bituminous concrete and base course as is necessary to properly correct defect. Replace base course and bituminous concrete.

END OF SECTION

SECTION 32 92 00
TURF AND GRASSES

PART 1 GENERAL

1.01 DEFINITIONS

A. Maintenance Period: Begin maintenance immediately after each area is planted (seed, sod, or sprig) and continue for a period of 8 weeks after all planting under this section is completed.

B. Satisfactory Stand: Grass or section of grass of 1,000 square feet or larger that has:

1. No bare spots larger than 3 square feet.
2. Not more than 10 percent of total area with bare spots larger than 1 square foot.
3. Not more than 15 percent of total area with bare spots larger than 6 square inches.

1.02 SUBMITTALS

A. Action Submittals: Product labels/data sheets.

B. Informational Submittals:

1. Seed: Certification of seed analysis, germination rate, and inoculation:
   a. Certify that each lot of seed has been tested by a testing laboratory certified in seed testing, within 6 months of date of delivery. Include with certification:
      1) Name and address of laboratory.
      2) Date of test.
      3) Lot number for each seed specified.
      4) Test Results: (i) name, (ii) percentages of purity and of germination, and (iii) weed content for each kind of seed furnished.
   b. Mixtures: Proportions of each kind of seed.
2. Seed Inoculant Certification: Bacteria prepared specifically for legume species to be inoculated.
3. Certification of sod; include source and harvest date of sod, and sod seed mix.
4. Certification of sprig type and name.
5. Description of required maintenance activities and activity frequency.

©COPYRIGHT 2025 JACOBS

1.03 DELIVERY, STORAGE, AND PROTECTION

A. Seed:

1. Furnish in standard containers with seed name, lot number, net weight, percentages of purity, germination, and hard seed and maximum weed seed content, clearly marked for each container of seed.
2. Keep dry during storage.

B. Sod:

1. Do not harvest if sod is excessively dry or wet to the extent survival may be adversely affected.
2. Harvest and deliver sod only after laying bed is prepared for sodding.
3. Roll or stack to prevent yellowing.
4. Deliver and lay within 24 hours of harvesting.
5. Keep moist and covered to protect from drying from time of harvesting until laid.

C. Sprigs:

1. Cut and deliver only after planting area is prepared for planting.
2. Deliver and plant within 24 hours of harvesting.
3. Keep moist and covered to protect from drying from time of cutting until planted.

D. Hydroseeding Mulch: Mark package of wood fiber mulch to show air dry weight.

1.04 WEATHER RESTRICTIONS

A. Perform Work under favorable weather and soil moisture conditions as determined by accepted local practice.

1.05 SEQUENCING AND SCHEDULING

A. Prepare topsoil as specified in Section 32 91 13, Soil Preparation, before starting Work of this section.

B. Complete Work under this section within 3 days following completion of soil preparation.

C. Notify Engineer at least 3 days in advance of:

1. Each material delivery.
2. Start of planting activity.

©COPYRIGHT 2025 JACOBS

D. Planting Season: Between March 15 and June 30 or between August 15 and October 31.

1.06 MAINTENANCE SERVICE

A. Contractor: Perform maintenance operations during maintenance period to include:

1. Watering: Keep surface moist.
2. Washouts: Repair by filling with topsoil, liming, fertilizing, seeding, and mulching.
3. Mulch: Replace wherever and whenever washed or blown away.
4. Mowing: Mow to 2 inches after grass height reaches 3 inches, and mow to maintain grass height from exceeding 3-1/2 inches.
5. Fence: Repair and maintain until satisfactory stand of grass is established.
6. Reseed unsatisfactory areas or portions thereof immediately at the end of the maintenance period if a satisfactory stand has not been produced.
7. Reseed/replant during next planting season if scheduled end of maintenance period falls after October 31.
8. Reseed/replant entire area if satisfactory stand does not develop by July 1 of the following year.

PART 2 PRODUCTS

2.01 FERTILIZER

A. Commercial, uniform in composition, free-flowing, suitable for application with equipment designed for that purpose. Minimum percentage of plant food by weight.

B. Application Rates: Determined by soil analysis results.

C. Mix:

1. Nitrogen: 10.
2. Phosphoric Acid: 10.
3. Potash: 10.

D. Top Dress Type: As recommended by local authority.

2.02 SEED

A. Fresh, clean new-crop seed that complies with the tolerance for purity and germination established by Official Seed Analysts of North America.

©COPYRIGHT 2025 JACOBS

B. Seeds of Legumes: Inoculated with pure culture of nitrogen-fixing bacteria prepared specifically for legume species in accordance with inoculant manufacturer's instructions.

C. Summer Seed Mix for Disturbed Area(s):

Species	Proportion by Weight
Velvet Bentgrass	25
Red Fescue	35
Partridge Pea	10
Indian Grass	15
Canada Wildrye	5
Kentucky Blue Grass	10

D. Winter Protective Seed: Winter barley or annual ryegrass.

2.03 SOD

A. Strongly rooted pads, capable of supporting own weight and retaining size and shape when suspended vertically from a firm grasp on upper 10 percent of pad.

1. Grass Height: 1-1/2 to 2-1/2 inches.
2. Strip Size: 12 inches wide and at least 3 feet long.
3. Soil Thickness: Uniform; 1 inch plus or minus 1/4 inch at time of cutting.
4. Age: Not less than 10 months or more than 30 months.
5. Condition: Healthy, green, moist; free of diseases, nematodes and insects, and of undesirable grassy and broadleaf weeds. Yellow sod, or broken pads, or torn or uneven ends will not be accepted.

2.04 STRAW MULCH

A. Threshed straw of oats, wheat, barley, or rye, free from (i) seed of noxious weeds or (ii) clean salt hay.

2.05 HYDROSEEDING MULCH

A. Wood Cellulose Fiber Mulch:

1. Specially processed wood fiber containing no growth or germination inhibiting factors.

©COPYRIGHT 2025 JACOBS

2. Dyed a suitable color to facilitate inspection of material placement.
3. Manufactured such that after addition and agitation in slurry tanks with water, the material fibers will become uniformly suspended to form homogenous slurry.
4. When hydraulically sprayed on ground, material will allow absorption and percolation of moisture.

2.06 NETTING

A. Jute:

1. Heavy-duty, twisted, weighing 1 pound per square yard.
2. Openings Between Strands: Approximately 1 inch square.

B. Plastic:

1. Extruded Polypropylene: 20 mils.
2. Opening Between Strands: 1 inch by 2 inch.

C. Matting:

1. Excelsior mat or straw blanket; staples as recommended by matting manufacturer.
2. Manufacturers and Products:
   a. American Excelsior Co., Rice Lake, WI; Curlex mat.
   b. North American Green, Evansville, IN; S150 blanket.

2.07 TACKIFIER

A. Derived from natural organic plant sources containing no growth or germination-inhibiting materials.

1. Capable of hydrating in water, and to readily blend with other slurry materials.
2. Wood Cellulose Fiber: Add as tracer, at rate of 150 pounds per acre.
3. Manufacturers and Products:
   a. Chevron Asphalt Co.; CSS 1.
   b. Terra; Tack AR.
   c. J Tack; Reclamare.

2.08 FENCE

A. 2-inch by 2-inch posts 4 feet high, spaced 10 feet on center, and strung with single strand of No. 12 gauge wire marked with cloth strips at 3-foot intervals.

©COPYRIGHT 2025 JACOBS

2.09 WEED BARRIER

A. 6 mils (0.006 inch) black polyethylene sheet.

PART 3 EXECUTION

3.01 PREPARATION

A. Grade areas to smooth, even surface with loose, uniformly fine texture.

1. Roll and rake, remove ridges, fill depressions to meet finish grades.
2. Limit such Work to areas to be planted within immediate future.
3. Remove debris, and stones larger than 1-1/2-inch diameter, and other objects that may interfere with planting and maintenance operations.

B. Moisten prepared areas before planting if soil is dry. Water thoroughly and allow surface to dry off before seeding. Do not create muddy soil.

C. Restore prepared areas to specified condition if eroded or otherwise disturbed after preparation and before planting.

3.02 FERTILIZER

A. Apply evenly over area in accordance with manufacturer's instructions. Mix into top 2 inches of topsoil, when applied by broad cast method.

B. Application Rate: 320 pounds per acre.

3.03 SEEDING

A. Start within 2 days of preparation completion.

B. Hydroseed slopes steeper than 3H:1V. Flatter slopes may be mechanically seeded.

C. Mechanical: Broadcast seed in two different directions, compact seeded area with cultipacter or roller.

1. Sow seed at uniform rate of 175 pounds per acre.
2. Use Brillion type seeder.
3. Broadcasting will be allowed only in areas too small to use Brillion type seeder. Where seed is broadcast, increase seeding rate 20 percent.
4. Roll with ring roller to cover seed, and water with fine spray.

©COPYRIGHT 2025 JACOBS

D. Netting: Immediately after mulching, place over mulched areas with slopes steeper than 3:1, in accordance with manufacturer's instructions. Locate strips parallel to slope and completely cover seeded areas.

E. Water: Apply with fine spray after mulching to saturate top 4 inches of soil.

3.04 SODDING

A. Do not plant dormant sod, or when ground is frozen.

B. Lay sod to form solid mass with tightly fitted joints; butt ends and sides, do not overlap.

1. Stagger strips to offset joints in adjacent courses.
2. Work from boards to avoid damage to subgrade or sod.
3. Tamp or roll lightly to ensure contact with subgrade; work sifted soil into minor cracks between pieces of sod, remove excess to avoid smothering adjacent grass.
4. Complete sod surface true to finished grade, even, and firm.

C. Fasten sod on slopes to prevent slippage with wooden pins 6 inches long driven through sod into subgrade, until flush with top of sod. Install at sufficiently close intervals to securely hold sod.

D. Water sod with fine spray immediately after planting. During first week, water daily or more frequently to maintain moist soil to depth of 4 inches.

E. Apply top dress fertilizer at 320 pounds per acre.

3.05 FIELD QUALITY CONTROL

A. 8 weeks after seeding is complete and on written notice from Contractor, Engineer will, within 15 days of receipt, determine if a satisfactory stand has been established.

B. If a satisfactory stand has not been established, Engineer will make another determination after written notice from Contractor following the next growing season.

3.06 PROTECTION

A. Protect from pedestrian traffic by erecting temporary fence around each newly seeded area.

END OF SECTION

©COPYRIGHT 2025 JACOBS

SECTION 33 01 30.16
TELEVISION INSPECTION OF SEWER PIPELINES

PART 1 GENERAL

1.01 REFERENCES

A. The following is a list of standards which may be referenced in this section:

1. JACOBS' System Condition Risk Enhanced Assessment Model (SCREAM).
2. National Association of Sewer Service Companies (NASSCO): Pipeline Assessment Certification Program (PACP).
3. Occupational Safety and Health Act (OSHA).

1.02 SUBMITTALS

A. Action Submittals:

1. Catalog and manufacturer's data sheets for television equipment.
2. Acceptance Standard closed-circuit television (CCTV) video; 2 copies.

B. Informational Submittals:

1. References: Contact names and telephone numbers.
2. List of staff and equipment to be used on Project.
3. Crew chief qualifications.
4. Crew chief contact information: name, mobile telephone number.
5. Certification that staff to be used for the Work is properly trained in confined space entry and hazardous atmospheres.
6. Training and inspection plan, 7 days prior to manual inspection.
7. Traffic control plan.
8. Confined space entry procedures.
9. Schedule: 7-day look-ahead; weekly.
10. Public notification flyer.
11. CCTV Inspection:
    a. Initial first day's CCTV inspection external hard drives (HD) DVDs within hours after first day's work is completed.
    b. Subsequent work products/documentation deliverables on routine basis every week.
    c. Include the following with each inspection submitted:
        1) Inspection media.
        2) Inspection database.
        3) Inspection reports.
12. Log of cable footage counter calibration checks.

©COPYRIGHT 2025 JACOBS

1.03 QUALITY ASSURANCE

A. Qualifications:

1. Contractor: Performed work successfully for at least three other projects, within last 5 years, with pipe lengths and pipe diameters similar to this Project.
2. Crew Chief: Minimum of 5 years' experience on projects similar to this Project and experienced using proposed equipment for this Project. If experience level cannot be met because of new equipment or technology proposed for Project, submit training and experience information for Owner's consideration.
3. Sewer CCTV Defect Coders: Actively certified by the National Association of Sewer Service Companies (NASSCO): Pipeline Assessment Certification Program (PACP), most current version.

B. Prestartup Meeting: At least 5 days prior to beginning CCTV inspection work, schedule with Owner and Engineer to review proposed temporary sewer flow diversion plan, traffic control plans, cleaning, and inspection methods.

C. Acceptance Standard CCTV Video:

1. FTP with videos showing example quality of work that Contractor proposes for Project.
2. Submittal shall also include examples that demonstrate camera advancement speeds, picture clarity, environment condition, lighting, panning as well as focus on defects, title frame, and screen labels for images, and sample stills.
3. Examples shall include a minimum of four manhole to manhole segments and combinations of sizes with a least one 48-inch diameter or greater and at least one brick and clay pipe material.
4. Picture quality and definition shall be to satisfaction of Engineer.

PART 2 PRODUCTS (NOT USED)

PART 3 EXECUTION

3.01 GENERAL

A. Complete closed-circuit television (CCTV) inspection for pipe segments as indicated on the Drawings**.**

1. Label assets and structures in their inspection records using same identification nomenclature as shown on Drawings.
2. If pipe or structure is not shown or listed, identify by downstream structure with letter designation added starting with "A" for each

©COPYRIGHT 2025 JACOBS

unidentified structure on each pipe segment. Subsequent upstream structures will be identified by adding “B”, “C”, and so on; include revisions on corrected field map.

B. Complete applicable Work specified in Section 01 57 28, Temporary Flow Control and Section 33 01 30.51, Gravity Sewer Pipeline Cleaning, prior to starting CCTV inspection work.

C. Record GPS latitude and longitude (decimal degrees) coordinates using portable global positioning system (GPS) device in field for manholes and pipeline access locations used during inspection; include them in inspection information in database and summary report.

D. Contractor’s Project Manager and Crew Chief shall attend regular progress meetings as scheduled by Engineer**.**

E. Look-Ahead Schedule: Prepare and submit at least 7 days in advance, identifying areas to be investigated during coming week. Schedules shall include structure numbers, street locations, and dates.

F. Traffic Control:

1. Conform to requirements of Section 01 50 00, Temporary Facilities and Controls.
2. Notify Engineer at least 7 days in advance of Work starting, of areas where Work will be conducted, and submit traffic control plan.

3.02 NOTIFICATIONS

A. Public:

1. Provide flyer in English and Spanish to each residence and business a minimum of 2 working days prior to CCTV operations in area.
   a. Flyer shall inform occupants of purpose of the Work, what might occur, and telephone numbers to call in case of questions or problems.
   b. Prior to distribution, date stamp flyers.
2. On daily basis, document distribution of flyers. Documentation, at a minimum, shall include:
   a. Maps showing areas notified.
   b. Date distributed.
   c. Name of person distributing flyers.
3. Provide flyer distribution information to Engineer daily.
4. Schedule work to be completed within 5 working day window established by distribution of public notices. If the Work is unable to be

©COPYRIGHT 2025 JACOBS

completed in notified area before end of the 5 working days, renotify area prior to resuming Work.

B. Engineer

1. A minimum of 5 days prior to the anticipated commencement of inspections in any one area and 24 hours in advance of actual start.
2. When obstruction, restricting flow in pipeline, is discovered.
3. If depth of flow in pipeline exceeds 33 percent of pipe diameter.
4. If conditions for CCTV inspection are found to be unsafe or impractical.
5. Pipe configuration in field is different than shown on maps; include diagram clearly indicating location of structure in relation to immediately adjacent structures.
6. If a disgruntled citizen or news media representative engages Contractor concerning Project.

3.03 EQUIPMENT

A. Inspection Vehicle:

1. Equipped with monitoring equipment specifically compatible with sewer inspection equipment.
2. Equipped with a safety backup alarm and traffic warning flashers.
3. Clearly marked with the inspection company name and phone number.

B. Inspection Equipment:

1. Inspection equipment that fails to produce satisfactory inspection quality shall be removed from the Work.
2. Monitoring Studio:
   a. Equipped with independent power source.
   b. Equipped with lights.
   c. Temperature controlled.
   d. Size: Sufficient to allow seating for a minimum of two people in addition to operating technician.
   e. Television Monitor:
      1) Locate in monitoring studio.
      2) Capable of producing high quality color picture.
      3) Resolution: No less than 350 C: 500 lines.
      4) Continuous display during survey.
3. Transport Platform:
   a. Self-propelled, mounted on skid, or mounted on float.
   b. Sized for each pipe diameter in accordance with manufacturer’s recommendations.
   c. Cables: 1,000 feet long, minimum.
   d. Equipped with tag line suitable for pulling camera backwards.

©COPYRIGHT 2025 JACOBS

e. Equipped with winch, power winch, TV cable, powered rewind, or other devices used to move camera through pipe.
   1) When powered and controlled winches are used to pull television camera through line, provide telephones, radios, or other means of communication between the two manholes to ensure communications exist between crewmembers.
f. Remote Reading Footage Counter:
   1) Accuracy: 0.20 foot over length of section being inspected.
   2) Counter display located in monitoring studio.
   3) Marking on cable will not be allowed.
   4) Calibration: Perform each day prior to setup.
g. Secure cable, chains, and other devices used with camera so as not to obstruct camera view or otherwise interfere with proper documentation of sewer conditions.

4. Television Camera:
   a. Closed-circuit color television camera.
   b. Sufficient for 8-inch through 15-inch diameters and in accordance with manufacturer's recommendations.
   c. Mounted on transport platform.
   d. Operative in 100 percent humidity conditions without lens fogging.
   e. Explosion proof **in** hazardous and corrosive environment and specifically designed for pipeline inspection.
   f. Camera Lighting:
      1) Mounted on and turned in direction of camera head.
      2) Light Sensitivity: Greater than 1.5 lux minimum.
      3) Minimize reflective glare.
      4) Remote variable intensity control.
      5) Provide clear, in-focus picture of entire inside periphery of pipe.
      6) Ability to achieve proper balance of tint and brightness.
   g. Resolution:
      1) Horizontal Resolution: 460 lines minimum.
      2) Vertical Resolution: 400 lines minimum.
      3) Meet or exceed monitor resolution.
   h. Rotation: 360 degrees.
   i. Pan and Tilt: 270 degrees, with adjustable supports designed for operation in connection with pipe inspection.
   j. Viewing Angle: 65 degrees, minimum.
   k. Focus and Iris Controls:
      1) Automatic or remote.
      2) Remote control adjustment for focus and iris shall be located in monitoring studio**.**

©COPYRIGHT 2025 JACOBS

l. Focal Distance: Adjustable through range from 6 inches to infinity.
m. Zoom: Capable of 40:1 (10x optical, 4x digital).

C. Inspection Software:

1. Inspection equipment shall utilize software capable of providing complete survey reports, inspection database, and linked media files.
2. Coding system shall be certified by NASSCO in accordance with their Pipeline Assessment and Certification Program (PACP). Equipped with modules necessary for NASSCO Pipeline Assessment and Certification Program (PACP) inspection and scoring.

3.04 INSPECTION

A. Video Recording:

1. CCTV inspection is represented by one manhole-to-manhole pipe segment or other access-to-access point; not multiple manhole-to-manhole segments.
2. Prior to beginning CCTV inspection, complete initial screen text step and position camera at center of manhole and with axis at centerline of pipe.
3. Before camera enters pipe, inspection shall provide internal video of manhole. Video recording shall begin by facing pipe segment to be televised and then pan/tilt/zoom as necessary to point camera up towards manhole opening.
4. Show continuous footage reading on inspection image. Place on screen where it is clearly visible (if black font, do not place on dark background, if white font, do not place on light background).
5. Viewing shall be in direction of flow, except while camera is being used in a reverse setup. Inspection shall proceed from upstream to downstream, unless prohibited by obstruction.
6. If during inspection operation television camera will not pass through entire line segment due to obstruction, setup equipment so inspection can be performed from opposite manhole.
7. If upstream (reverse) setup, is required, establish new inspection run separate from downstream (normal) setup.
8. Keep camera lens clean and clear. If material or debris obscures image or causes reduced visibility, clean or replace lens prior to proceeding with recording operation.
9. Camera lens shall remain above visible water level and may submerge only while passing through clearly identifiable line sags or vertical misalignments. If flow exceeds 33 percent of diameter, such that camera lens becomes obscured, stop inspection until flow subsides. If necessary, reschedule CCTV operation. Surcharging and flooding of

©COPYRIGHT 2025 JACOBS

camera lens is not an excusable condition if it has been artificially created upstream (for example, placement of flow plugs or freshwater flushing in pipe).

10. Record inside of each lateral and connection of lateral to pipeline.
11. Recordings shall clearly show defects and observations, and their severity, in addition to obvious features, such as, laterals and joints.
12. Immediately report to Engineer obstructions that restrict flow and cause inspection to be interrupted. Document condition with still photographs and begin inspections of other pipelines.
13. Camera Operation:
    a. Speed: 30 feet per minute, maximum, during inspection.
    b. Stop, for a minimum of 5 seconds, at every lateral, or other defect or adversity.
    c. Pan entire diameter or area of pipe at each defect and lateral connection.
    d. Re-adjust lens, lighting, and focus to ensure clear, distinct, and properly lighted image of defect.
14. Loss of color or severe red or green color will be cause for rejection of inspection.
15. Recordings shall be without distortion or outside interference.
16. Televise line segments from structure-to-structure on same FTP in continuous run.
    a. Video shall clearly show camera starting and ending at structure unless defects do not allow it.
    b. Do not perform partial televising on one FTP and then complete run on another FTP.
    c. If line is partially televised, as a result of an excusable condition, (for example, collapsed line), televised length shall be viewed by Engineer for acceptability.
    d. If portion of line is unacceptable, entire segment shall be deemed unacceptable and shall be retelevised.
17. Engineer may accept physical inspection that does not adhere to minimum standards if adverse conditions are encountered and reinspection is not advised. In such a case, enough data shall be provided to permit accurate assessment.

B. Measurement:

1. Record in English units.
2. Obtain pipe diameter by physical measurement in upstream (or downstream) access structure.
3. Verify pipe material (such as, RCP, VCP, CMP) and surface lengths between manholes.
4. Use calipers or measuring rod to determine diameter of inlet and outlet pipe.

©COPYRIGHT 2025 JACOBS

5. Footage measurements shall begin at centerline of upstream manhole, unless Engineer approves otherwise.
6. Continuous Footage Readings:
    a. Use to identify location of defects.
    b. Accurate to within plus or minus 0.20 feet tolerance.
    c. Defect identifications are to be called out and recorded to nearest 0.10 feet.
    d. Line segment recording will be unacceptable if continuous footage meter is inaccurate, or identified defects or features leave doubt as to accuracy of locations or total length.
7. Measurement shall be zeroed after each segment inspected.
8. Check accuracy of measurement meters daily by use of walking meter, roll-a-tape, or other suitable device.

C. Defect Coding:

1. NASSCO PACP: Contractor shall perform sewer CCTV defect coding in accordance with the NASSCO in accordance with their Pipeline Assessment and Certification Program (PACP), latest version.

3.05 RECORDING OF DOCUMENTATION

A. Upon completion of CCTV inspection, transfer inspection data to FTP of sufficient capacity and compatibility with Owner's equipment; include code required for proper playback of video file.

1. Labeling:
    a. Provide digital directory label for the FTP link that indicates the following:
        1) Name of Owner.
        2) Project title.
        3) Date of inspection.
        4) Inspection company.
        5) Deliverable number.
        6) Range of pipe structure identification numbers included.

B. Media:

1. Video:
    a. Inspections completed, with a unique filename per inspection.
    b. Encoded in .WMV, .MPG, or .AVI format.
    c. Opening Screen:
        1) The following is an example of required on-screen text display fields:
            a) Date and Time: (YYYY/MM/DD), (military time hh:mm).

©COPYRIGHT 2025 JACOBS

b) Surveyor's Name/Company: John Doe/ABC Company.
c) Project Name: XYZ project.
d) Location: 1 Example Street.
e) Location Code: B – Example Highway.
f) Upstream MH No: ### (Feature_ID or Facility_ID).
g) Upstream MH depth: ##.# (nearest tenth of a foot).
h) Downstream MH No: ### (Feature_ID or Facility_ID).
i) Pipe Segment Ref. ###### (Feature_IDs).
j) Starting Footage: ### (nearest tenth of a foot).
k) Inspection Direction: Downstream or upstream.
l) Pipe Material: Example, ductile iron.
m) Pipe Diameter/Height/Width: Diameter: ##/Height: ##/Width: ## (as measured in field).
n) Weather: Example, snow.
o) Precleaning: Example, jetting.
p) Additional Information: Additional important information/comments.

d. Continuous View:
1) Following is list of required on-screen text display fields:
a) Inspection date and time.
b) Continuous forward and reverse readout of cameral distance from center of manhole reference (tape counter footage).
c) Pipe structure identification number.
d) Defect/observation code(s) (when encountered).

2. Audio:
a. Embedded in video file.
b. Operator shall include description of inspection setup, including related information from log form and unusual conditions.
c. Operation changes (for example, remove roots and restart inspection at footage prior to root removal).
d. Verbal description and location of each defect.
e. Verbal description and location of each service connection.

3. Still Photographs:
a. Provide digital photographs showing inspection image whenever observation or defect is recorded.
b. Each with unique filename.
c. Encoded in .jpeg format.
d. Minimum 640 pixels by 480 pixels resolution.
e. Provide label on front of photograph with structure identification number, footage (if not visible on photograph), and defect code.

C. Database:

©COPYRIGHT 2025 JACOBS

1. Include all inspections. Creating a database per inspection is not acceptable.
2. Provide database of collected data including:
   a. Asset information.
   b. Inspection information, where each inspection includes no more than one manhole-to-manhole segment.
   c. Defect codes and scores.
   d. Start and stop footages for continuous defects.
3. File Type: MS Access, .MDB.
4. Database Format: NASSCO PACP data shall be exported into standard PACP Exchange database, latest version**.**
5. List inspection media names in corresponding asset/inspection/defect information field within database.

D. Inspection Reports:

1. Provide inspection reports, in Portable Document Format (PDF) format, including:
   a. Summary of inspections completed.
   b. Pipe graphs of each inspection showing asset information and defects/observations.
2. Field Maps:
   a. Corrected to reflect actual field conditions.
   b. Illustrate changes in pipe routing that differ from anticipated network. Are not necessary for pipe segments whose routing is as indicated on the Drawing.
   c. Neatly strike out wrong data using green markups and clearly mark in correct data, using red markup. Show notes that clarify changes in blue markup.

3.06 FIELD QUALITY CONTROL

A. Review videos and reports to resolve inconsistent and conflicting data and to improve accuracy of data prior to submittal.

B. If minimum level of accuracy is not met between videos and reports after review by Engineer**,** perform reinspection of pipes that do not meet requirements.

C. Quality control procedures shall be in accordance with method attached as a supplement at the end of this section.

3.07 SUPPLEMENTS

A. The supplements listed below, following “End of Section,” are a part of this specification.

©COPYRIGHT 2025 JACOBS

1. NASSCO PACP Quality Control.

END OF SECTION

©COPYRIGHT 2025 JACOBS

NASSCO PACP QUALITY CONTROL PROCEDURE

General Method

CCTV contracting companies shall have a Random Number Quality Control procedure in place that is then audited by client. A random number is one of a series of numbers that have no detectable pattern, so that every item in a known population has an equal chance of being selected based upon random number. A minimum of 5 percent of CCTV contractor's data shall be checked using a Random Number Quality Control procedure as basis of selecting inspections for review. Intent is for Client to audit CCTV contractor's QC procedure rather than performing their own QC. If there is doubt about results then Client can ask for another differing set of Random Numbers to be created and be applied to CCTV operator in question, thereby generating another different set of inspections to be checked. Create QC history for each CCTV operator and not for each contract.

Generating Random Numbers

A Random Number list, based upon population and selection percentage, is available from many web sites. This site generates a list of random numbers that can be sorted in numerical order and printed. Each CCTV operator shall have a different set of Random Numbers.

Selection of Inspections to be Checked

In the field, CCTV operator inspects each sewer segment and enters PACP information into a computer database. In the office, QC employee/operator counts through inspections, for each separate CCTV operator, in the order in which they were inspected. When inspection coincides with a Random Number a copy of inspection is made from HD/DVD onto CCTV operator's master QC HD/DVD. A copy of corresponding CCTV report is also printed from computer. These are then kept in CCTV operator's QC folder until QC is carried out by qualified QC employee/operator. By using the Random Number sampling system CCTV operator will not be able to "abuse" system. Client can ask for the set of Random Numbers for each CCTV operator at start of Project, or Client can provide a set of Random Numbers to be used for each operator associated with Project.

Quality Control of Inspection

It is expected that accuracy of Header record exceeds 90 percent as most field contents are based upon facts. The simplest method for QC of Header record is as follows:

Each field completed, and those that are not but should have been, is counted, producing a "number of fields checked", say 32 (ignoring unused fields).

Then fields with mistakes are counted, irrelevant of level of the mistake, creating an "error count" say for this example, 2.

©COPYRIGHT 2025 JACOBS

Therefore, calculation is:

(error count/number of fields checked) * 100 = percentage error 100 - error percentage = accuracy percentage

(2 / 32) * 100 = 6.25%

100% - 6.25% = 93.75% accuracy level

This percentage accuracy level is then entered onto a graph so that ongoing accuracy can easily be seen, again, for each CCTV operator.

Detail Information

It is expected that accuracy of Observation/Defect codes exceed 90 percent.

As with Header records, each field that has been completed in the Detail records is added up, irrelevant of whether it is a Clock At/To, the Continuous Defect field or Distance/Video digits. Each entry is treated as equally important. From this number of entries made in the Detail section, a figure is arrived. A qualified QC employee/operator then looks through the same inspection and checks accuracy of each field and reaches two values, the number of entries that should have been made and an error count. No attempt should be made to create a new inspection from scratch, just check what has already been reported on. If a defect is not recorded then number of fields that support the missed defect is added to Error Count, for instance, if CCTV operator misses an EMJ then error count increases by at least five errors:

Video Digit, Distance, Code, Clock At and To and the percent

The five errors must also be added to number of entries that should have been made as well as any other errors to reach a total number of entries. Therefore, at the end each inspection there are two values, the number of entries that should have been made and the error count. Calculation for Quality Control of each inspection is as follows:

(Error Count / Number of entries that should have been made) * 100 = Percentage Error

100 – Percentage Error = Accuracy Level

Assume number of entries made should have been 122 Assume Error Count is 8:

(8 / 122) * 100 = 6.5%

100% - 6.5% = 93.5% Accuracy Level

This percentage Accuracy Level is then entered onto a graph so that ongoing level can be easily seen for each CCTV Operator.

©COPYRIGHT 2025 JACOBS

Summary

QC inspection information for each sewer segment checked is entered into QC forms so that an Audit trail can be established. There must be hard copies of each inspection checked with Errors and Omissions clearly marked. Accuracy Level calculations must also be entered into QC logs. Random Number must be entered against each aspect of QC procedure. A continuing Accuracy Level Graph must be kept up to date for each CCTV operator; it is acknowledged that results could be as much as 1 month behind time of inspection.

END OF SECTION

©COPYRIGHT 2025 JACOBS

SECTION 33 01 30.51
GRAVITY SEWER PIPELINE CLEANING

PART 1 GENERAL

1.01 DEFINITIONS

A. Cleaning Contractor's Representative: Cleaning Contractor's representative who will be available whenever Work is underway. Authorized to act on behalf of Cleaning Contractor.

B. Crew Chief: Cleaning Contractor's field representative who will be onsite whenever Work is underway. Responsible for performance of Work in accordance with the Contract Documents.

C. Remediation Cleaning Subcontractor (Cleaning Contractor): Local firm specializing in cleaning and disinfecting residences and businesses.

1.02 SUBMITTALS

A. Action Submittals:

1. Cleaning Equipment: Catalog and manufacturer's data sheets.
2. Cleaning Methods: Narrative description.

B. Informational Submittals:

1. Flooding and Backup Spill Prevention, Emergency Response, and Remediation Plan:
    a. Identify measures that will be taken to prevent flooding resulting from high-pressure water use and backups.
    b. Identify equipment and materials available to respond to a backup spill, including quantities and storage location.
    c. Remediation cleaning service subcontractor qualifications and contact information:
        1) Name.
        2) Address.
        3) Phone.
        4) Emergency contact information.
2. Disposal Plan:
    a. Location of disposal site.
    b. Method of debris transport.
    c. Proposed documentation of disposal quantities.
3. Contractor Information:
    a. List of staff and equipment to be used on Project.

©COPYRIGHT 2025 JACOBS

b. Contractor's representative and Crew Chief qualifications and contact information.

4. Public Notification Plan:
   a. Proposed flier.
   b. Maps designating proposed areas of distribution.
   c. Proposed distribution schedule.
5. Documentation of public notification.
6. Sanitary sewer cleaning forms.
7. A copy of the post-cleaning verification videotape.
8. Documentation of remediation cleaning services, if provided.

1.03 QUALITY ASSURANCE

A. Qualifications:

1. Crew Chief: Minimum of 5 years' experience on projects similar to this Project including experience with proposed equipment.
2. Remediation Cleaning Subcontractor: Minimum of 3 years' experience.

B. Premobilization Meeting: At least 5 days prior to beginning the Work, schedule with Engineer, and Contractor's representative to review the following:

1. Temporary Flow Control Plan as specified in Section 01 57 28, Temporary Flow Control.

PART 2 PRODUCTS (NOT USED)

PART 3 EXECUTION

3.01 GENERAL

A. Obtain information concerning depths of flow, manhole depths, air quality in the sewers, accessibility of manholes, traffic conditions, and other safety considerations during the time that cleaning will occur as required to complete the Work.

B. Clean gravity sewer pipe segments as indicated on Drawings.

C. Gravity sewer pipe cleaning includes preliminary tasks, cleaning, removal of debris, remediation, disposal, and documentation of activities as described herein.

3.02 NOTIFICATIONS

A. Public Notification:

©COPYRIGHT 2025 JACOBS

1. Provide notice ("flyer") in English and Spanish to each residence and business a minimum of 2 working days prior to start of cleaning operations in the area. Include the following:
   a. Purpose of the Work.
   b. Description of what to expect.
   c. Window of time during which cleaning will occur, no longer than 5 days.
   d. Telephone numbers to call in case of questions or problems.
   e. Date stamp on flyer reflecting the date distributed to public.
2. Submit documentation of flyer distribution daily, including at minimum:
   a. Maps showing areas notified.
   b. A copy of the flyer distributed, including date stamp.
   c. Name of person completing notification.
3. Schedule the Work to be completed within 5-day window established by distribution of public notices or less. If the Work is not completed in notified area before end of 5 days, renotify area prior to resuming the Work.

B. Notify Engineer immediately if:

1. Flooding, sewage backup\spill, overflow, or damage to sewer pipe occurs.
2. Major hindrance is encountered that prevents cleaning of entire pipe segment.
3. Successful cleaning cannot be performed without risk of damage to pipe.

3.03 CLEANING EQUIPMENT

A. General:

1. Capable of removing dirt, grease, rocks, sand, roots, and obstructions from sewer pipes and manholes.
2. Submit proposed equipment and cleaning method for approval prior to beginning the Work.

B. High-Velocity, Hydro Cleaning Equipment:

1. Equipped with its own water tank, auxiliary engines, pumps, and hydraulically driven hose reel.
2. Nozzles:
   a. Selection of two or more high velocity nozzles.
   b. Capable of producing a scouring action from 10 degrees to 45 degrees in line sizes designated to be cleaned.
3. High-velocity gun for washing and scouring manhole walls and floor; capable of producing flow from fine spray to solid stream.

©COPYRIGHT 2025 JACOBS

4. Operating Pressure:
    a. Sewers 6-inch to 15-inch diameter: 1,500 psi minimum.
    b. Sewers 18-inch diameter and Greater: 2,300 psi minimum.

C. Hydraulically Propelled Equipment:

1. Movable Dam Type:
    a. Constructed so that a portion of dam may be collapsed during cleaning operation to protect against flooding of sewer.
    b. Equal in diameter to pipe being cleaned.
    c. Flexible scraper provided around outer periphery to remove grease.
2. Sewer cleaning balls or other equipment that cannot be collapsed:
    a. Subject to approval by Engineer for proposed use.
    b. Identify special precautions to prevent flooding of sewer and public or private property in submittal.

D. Vacuum System:

1. Minimum 6-inch suction line.
2. Equipped with fluidizing nozzle capable of removing material from beneath water surface at depths from ground surface to sewer invert of at least 20 feet.
3. Equipped with debris catcher or other device to collect debris at extraction point and prevent debris from passing downstream.

E. Submersible Downstream Pump System:

1. Minimum 6-inch discharge line.
2. Capable of pumping material from sewer invert to discharge elevation at least 20 vertical feet.
3. Equipped with debris catcher or other device to collect debris at extraction point and prevent debris from passing downstream.

F. High-Volume Water and Solids Separation System:

1. Capable of dewatering solids and semisolids to remove all free liquid as determined by EPA Method 9095B paint filter test.
2. Provide closed loop, non-odor emitting equipment, and isolate hoses or piping from public water supply.

G. Mechanically Powered Cleaning Equipment:

1. Use only when authorized by Engineer and only when other cleaning methods are shown to be ineffective.

©COPYRIGHT 2025 JACOBS

2. Use belt-operated bucket machines in pairs with sufficient power to perform the Work within schedule constraints.
3. Overload device in lieu of belt operation may be acceptable, but direct-drive machine that could cause damage to pipe will not be permitted.
4. Power Rodding Machine:
   a. Either sectional or continuous rod type.
   b. Capable of holding 750 feet of rod minimum.
   c. Fully enclosed with automatic safety clutch or relief valve.
   d. Rod: Heat-treated steel.

3.04 PREPARATION

A. Perform applicable Work specified in Section 01 57 28, Temporary Flow Control prior to starting cleaning operations.

B. Take precautions to prevent damage or flooding of public or private property because of cleaning operations, including resulting water pressure.

C. Traffic Control:

1. Conform to requirements of Section 01 50 00, Temporary Facilities and Controls.
2. Notify Engineer at least 7 days prior to starting Work in an area.

D. Supply Water for High-Velocity Hydro-Cleaning or Flushing:

1. Water may be obtained from public water system at no cost**.**
2. Schedule use of fire hydrants with Owner.
3. Use water from fire hydrants only as required for the Work; do not waste water.
4. Provide immediate access to fire hydrant upon request of Fire Department, Owner, or Engineer.
5. Provide backflow prevention device, mounted on fire hydrant regardless of backflow configuration on cleaning equipment.

3.05 PIPELINE CLEANING

A. Remove foreign materials from line and restore sewer to a minimum of 95 percent of original available cross-sectional area.

B. Clean using hydraulically propelled, high-velocity hydro-, or mechanically-powered equipment. Provide supplemental equipment as required for actual pipe condition to remove all dirt, sand, rocks, gravel, grease, sludge, roots, and other debris from the pipe.

©COPYRIGHT 2025 JACOBS

C. Begin cleaning at upstream end of system and proceed in downstream direction. Do not perform step cleaning without prior written authorization from Engineer.

D. Do not clean a pipeline segment upstream of a section of pipe already cleaned without re-cleaning the downstream section.

E. If cleaning equipment is performing in accordance with submitted literature and an entire pipe section cannot be cleaned from upstream manhole, **contact** Owner for removal of obstruction. With Engineer's approval, abandon effort and document what was completed to point of blockage. If further investigation reveals no blockage exists, reimburse Owner's costs to respond, investigate, and attempt repair.

F. Remove debris at downstream manhole of pipe segment being cleaned.

3.06 ROOT REMOVAL

A. Remove roots as part of sewer cleaning process.

B. Conduct cleaning operations to completely remove roots from joints.

C. Provide equipment required to completely remove roots from sewer lines, including, but not limited to, rodding machines, bucket machines and winches using root cutters and porcupines, and high-velocity jet cleaners or other mechanical or hydraulic equipment.

D. CCTV may be used at Contractor's discretion to guide root removal; however, use during removal does not replace verification documentation as specified.

3.07 GREASE REMOVAL

A. Conduct cleaning operations to completely remove grease from designated sewer lines. The top of the pipe may require a targeted effort.

B. Provide required equipment and materials including, but not limited to, hot water, rodding machines, bucket machines, high-velocity jet cleaners, and other mechanical or hydraulic equipment.

C. CCTV may be used to guide grease removal; however, use during removal does not replace verification documentation as specified.

3.08 MANHOLE AND VAULT CLEANING

A. Clean walls using high-pressure water jet capable of 1,500 psi pressure.

©COPYRIGHT 2025 JACOBS

B. Vacuum debris from manhole or vault and dispose material in the same manner as debris from cleaning adjacent sanitary sewer lines.

3.09 REMEDIATION OF BACKUPS INTO BUILDINGS

A. Upon discovery of a sewage backup, immediately notify Engineer and provide location and address. Dry up spill immediately and dispatch cleaning service to professionally clean and disinfect area. Dispatch cleaning service to customer site for arrival within 3 hours of notification of backup occurrence, or as otherwise scheduled by customer.

B. Submit documentation of remediation services to Engineer.

C. Should customer refuse remediation services, provide business card and contact name to customer to provide option of scheduling remediation at a later date. Document refusal of remediation services in writing and provide to Engineer.

3.10 MATERIAL REMOVAL AND DISPOSAL

A. Remove sludge, dirt, sand, rocks, grease, and other solid or semisolid material resulting from cleaning operation from pipeline at adjoining downstream manhole. Do not pass material to downstream pipe.

B. Remove and transport debris resulting from cleaning operations to designated disposal site at the Wastewater Treatment Facility located at 210 Municipal Road, Waterbury, CT 06708 at end of each workday**.**

C. Adhere to Federal, State, and local regulations and permits requirements regarding collection, handling, transport, storage, and disposal of debris.

D. Debris Documentation:

1. Track quantity of debris removed from sanitary sewer system.
2. Use sewer cleaning log form attached at the end of this section
3. Include permit number of vehicles used on a daily basis.
4. Provide trip tickets to disposal site as required by disposal site. Submit three copies of trip tickets to Engineer weekly.

3.11 VERIFICATION OF CLEANING

A. Submit log of cleaned pipe segments using sanitary sewer cleaning form attached as a supplement at the end of this section to Engineer on a weekly basis.

©COPYRIGHT 2025 JACOBS

B. Inspect cleaned pipe segment by CCTV inspection, as specified in Section 33 01 30.16, Television Inspection of Sewer Pipelines, to verify results of cleaning root removal, and grease removal effort.

3.12 SUPPLEMENTS

A. The supplements listed below, following “End of Section,” are a part of this specification.

1. Forms: Sanitary Sewer Cleaning Form.

END OF SECTION

©COPYRIGHT 2025 JACOBS

Sanitary Sewer Cleaning Form

ID _____ **Sec No.** _____ **Seg No.** _____ **Map No.** _____ **Crew** _____

UPMH ID: _____ **DSMH ID:** _____ **Sub-basin:** _____

US Main/Lat: _____ **US Manhole:** _____

DS Main/Lat: _____ **DS Manhole:** _____

Address @ dsmh: _____

Pipe Usage: _____ 1 = Collector 2 = Interceptor/Trunk Sewer

Location: _____

1 = Street
2 = Intersection
3 = Alley
4 = Curb/Gutter
5 = Parking Lot
6 = Sidewalk
7 = Front/Side Yard
8 = Backyard
9 = Ditch/Creek
10 = Easement
11 = Railroad Right of Way
12 = Other

Comment: _____

Could Not Clean Because: _____

1 = Access (explain)
2 = C.N.L.
3 = D.N.E.
4 = Buried
5 = Haz/Atmos
6 = Locked Gate
7 = Unsafe
8 = Sealed Lid
9 = Traffic
10 = Dog

Comment: _____

Type of Debris: _____

1 = Grease
2 = Rock/Gravel
3 = Roots
4 = Broken Pipe
5 = Sand

Comment: _____

Manhole Depth (ft): _____

Depth of Debris Before Cleaning (in): _____

©COPYRIGHT 2025 JACOBS

Building Back Up Information

Address: _____

Address: _____

Address: _____

Measured Length (manhole to manhole): _____ **Footage Cleaned:** _____ **Pipe Dia. (in):** _____

Blockage Encountered at _____ **(ft) from Downstream Manhole**

Cleaning Date: _____

Hydraulic Cleaning (slow passes) at _____ **psi**

Results of First Pass: _____

Results of Second Pass: _____

Results of Third Pass: _____

Mechanical Cleaning Date: _____

Number of Additional Slow Passes: _____ _____

☐ **Root Cut** **Method used:** _____ ☐ **Rod** ☐ **Bucket**

☐ **Degrease** **Method used:** _____ ☐ **Swab** ☐ **Scraper**

Volume of Debris Removed: _____ **Cu Yds**

Additional Comments: _____

_____

©COPYRIGHT 2025 JACOBS

SECTION 33 01 32
PHYSICAL INSPECTION OF SEWER UTILITIES

PART 1 GENERAL

1.01 DEFINITIONS

A. CO: Carbon Monoxide.

B. GIS: Geographic Information System.

C. H_2S: Hydrogen Sulfide.

D. LEL: Lower Explosive Limit.

E. O_2: Oxygen.

1.02 SUBMITTALS

A. Action Submittals:
   1. Shop Drawings: Catalog and manufacturer's data sheets for specialized equipment.

B. Informational Submittals:
   1. References: Contact names and telephone numbers of at least three similar projects completed within last 5 years.
   2. List of staff and equipment to be used on Project.
   3. Verification of notification to City's Traffic Department.
   4. Submit Weekly:
      a. Look-ahead inspection schedules.
      b. Summary of changes to system maps.
      c. Original field data sheets and photographs.

1.03 QUALITY ASSURANCE

A. Qualifications:
   1. Contractor: Performed work successfully for other projects with pipe lengths and pipe diameters similar to this Project.
   2. Crew Chief: Worked on other projects similar to this Project and experienced using equipment proposed for this Contract.

©COPYRIGHT 2025 JACOBS

B. Prestartup Meeting: Prior to beginning physical inspection work, schedule with Owner and Engineer to review proposed inspection methods.

1.04 NOTIFICATIONS

A. Notify Engineer:
1. At commencement of inspections.
2. When obstruction in structure that restricts flow in pipeline is discovered.
3. If depth flow in pipeline exceeds 50 percent of pipe diameter.
4. If conditions for physical inspections are found to be unsafe or impractical.
5. Pipe configuration in field is different than shown on Drawings. Notification shall include diagram clearly indicating location of structure in relation to immediately adjacent structures.

PART 2 PRODUCTS

2.01 MATERIALS

A. Inspection Equipment:
1. Field truck with beacon, arrow board, and boom hoist.
2. Gas detector with O_2, LEL, H_2S, and CO monitors.
3. Cellular telephone.
4. Traffic equipment, including reflector cones, of a size that meet traffic control requirements.
5. Manhole hooks, pribar, crowbar, pick, and shovel.
6. Tool box with tool set.
7. Survey rod.
8. White paint in spray can.
9. Level (3 feet).
10. Metal detector.
11. Inspection lighting shall consist of powerful flashlight. Lighting for camera quality shall be suitable to provide well lit area at bottom of structure.

2.02 PHOTOGRAPHS

A. Still Photographs:
1. Digital images and color hard copies of structures inspected.
2. Two photos, minimum, showing surface area around structure and channel interior configuration.
3. Additional photos for major defects identified during inspection.

©COPYRIGHT 2025 JACOBS

PART 3 EXECUTION

3.01 GENERAL

A. Owner and Engineer will be present during first day of inspection to establish quality guidelines.

B. Refer to Division 01 for work hours.

C. Inspection work shall be scheduled based on current weather forecasts. Do not schedule during storm event or within 24 hours after storm event.

D. Prepare and submit weekly look-ahead schedules one week in advance to identify areas to be investigated during coming week. Schedules shall include structure numbers, street locations, and dates.

E. Prevent unnecessary disruption of traffic and access to residences or businesses.

F. Provide 2-person crew, minimum, working from surface only. Confined space entry shall be required if structure is too deep for light source to clearly show invert configuration and defects. Immediately notify Engineer when confined space entry is required.

G. Locate structures scheduled for inspection. If needed, use metal detector to locate buried structures.

H. Structures will be identified as shown on contract drawings. If pipe or structure is not shown, identify by upstream structure with a letter designation added starting with “A” for each unidentified structure on each pipe segment.

I. Use calipers or measuring rod to determine diameters of inlet and outlet pipes.

J. Record defects and visual evidence of operating condition.

K. Record measurements in English units.

L. After verification that structure location agrees with drawings, paint structure number in white paint, at least 3 inches tall on top of structure, but no more than 6 inches tall. Number shall be clearly written for later reference by surveyors.

3.02 DOCUMENTATION

A. Work Product:
   1. Electronic database of inspection logs, digital photos, and final report. Owner will provide format required for project.

©COPYRIGHT 2025 JACOBS

2. Hard copies of inspection log and photographs.

B. Completed logs (hard copy) shall be available in field so that Engineer can verify consistency of data from one structure to the next. If changes are made to inspection logs, revised copy (with change highlighted in yellow) shall be provided to Engineer with weekly report.

C. Inspection log sheets subject to weekly audits and omissions and inaccuracies shall be corrected within one week from notification.

D. Engineer may accept physical inspection that does not adhere to minimum standards if adverse conditions are encountered and reinspection is not advised. In such a case, enough data shall be provided to permit accurate assessment.

E. Inspection log sheets shall be provided in report format consistent with example format attached at end of this section. One log shall be fully completed for each structure located. Once notified, Owner will make every attempt to locate or make accessible structures that cannot be located or accessed.

F. Weekly Inspection Summary:
1. Prepare and submit weekly, summary of inspection logs and photographs. Summary shall list each inspection, presenting structure numbers, street that structure is located on, date of inspection, and photograph number associated with each structure.
2. Still photographs shall correctly identify structure identification number and associated defect code. If not shown on photograph, indicate footage location where photo was taken. Submit with appropriate inspection log.
3. Incorrect written structure identifications will be rejected by Engineer.

G. Final Report:
1. Provide on FTP the final electronic database containing inspection reports and digital photographs (JPEG files) with each file named according to pipe structure identification number.
2. Still photographs taken shall be properly displayed and labeled on 8-1/2-inch by 11-inch paper for inclusion in final report.
3. One complete copy of final report shall be submitted to Engineer within 2 weeks after completion of field work.

END OF SECTION

©COPYRIGHT 2025 JACOBS

SECTION 33 05 01.12.01 DUCTILE IRON (DIP) GRAVITY SANITARY SEWER	
Item	**Description**
Pipe: 15-inch Diameter and Under	AWWA C151/A21.51 Ductile Iron (DIP) Pipe, Thickness Class 52, Lined with 40-mil ceramic epoxy in accordance with AWWA C116/A21.16
Joints	Push-on, rated at minimum working pressure of 350 psi.
Gaskets	C111/A21.11, Rubber-Gasket Joints for Ductile-Iron Pressure Pipe and Fittings
Tee and Wye Fittings	AWWA C110/A21.10 Ductile-Iron Fittings
Plugs	Removable. Removal shall provide a socket suitable for making a flexible jointed lateral connection or extension.
Source Quality Control Testing	In accordance with specified ASTM.

END OF SECTION

©COPYRIGHT 2026 JACOBS

SECTION 33 05 01.12.02 POLYVINYL CHLORIDE (PVC) GRAVITY SANITARY SEWER	
Item	**Description**
Pipe: 15-inch Diameter and Under	ANSI / AWWA C900 Polyvinyl Chloride (PVC) DR 25 Pressure Pipe conforming to cell classification of 12454 as defined in ASTM D1784
Joints	Locked-in gasket, in accordance with ASTM D3139
Gaskets	ASTM F477 factory fabricated rubber compression type with solid cross section. Lubricant for joining pipe as approved by pipe manufacturer.
Tee and Wye Fittings	ANSI / AWWA C900 Polyvinyl Chloride (PVC). Shall conform to the requirements of ASTM D3034 and ASTM F679.
Plugs	Removable. Removal shall provide a socket suitable for making a flexible jointed lateral connection or extension.
Source Quality Control Testing	In accordance with specified ASTM.

END OF SECTION

©COPYRIGHT 2026 JACOBS

SECTION 33 05 01.12
GRAVITY SEWER PIPE AND FITTINGS

PART 1 GENERAL

1.01 REFERENCES

A. The following is a list of standards which may be referenced in this section:

1. American Water Works Association (AWWA):
   a. C105, Polyethylene Encasement for Ductile Iron Pipe Systems.
   b. C110, Ductile-Iron and Gray-Iron Fittings.
   c. C111, Rubber-Gasket Joints for Ductile-Iron Pressure Pipe and Fittings.
   d. C116/A21.16, Protective Fusion-Bonded Epoxy Coatings for the Interior and Exterior Surfaces of Ductile-Iron and Gray-Iron Fittings for Water Supply Service.
   e. C205, Cement-Mortar Protective Lining and Coating for Steel Water Pipe - 4 in. (100 mm) and Larger - Shop Applied.
   f. C150/A21.50, Thickness Design of Ductile-Iron Pipe.
   g. C151/A21.51, Ductile-Iron Pipe. Centrifugally Cast.
   h. C153/A21.53, Ductile-Iron Compact Fittings.
   i. C208, Dimensions for Fabricated Steel Water Pipe Fittings.
   j. C302, Reinforced Concrete Pressure Pipe, Noncylinder Type.
   k. C900 Polyvinyl Chloride (PVC) Pressure Pipe and Fabricated Fittings, 4 In. Through 60 In. (100 mm Through 1,500 mm)
2. ASTM International (ASTM):
   a. A615/A615M, Standard Specification for Deformed and Plain Carbon-Steel Bars for Concrete Reinforcement.
   b. A746, Standard Specification for Ductile Iron Gravity Sewer Pipe.
   c. C76, Standard Specification for Reinforced Concrete Culvert, Storm Drain, and Sewer Pipe.
   d. C150, Standard Specification for Portland Cement.
   e. C361, Standard Specification for Reinforced Concrete Low-Head Pressure Pipe.
   f. C425, Standard Specification for Compression Joints for Vitrified Clay Pipe and Fittings.
   g. C443, Standard Specification for Joints for Concrete Pipe and Manholes, Using Rubber Gaskets.
   h. C596, Test Method for Drying Shrinkage of Mortar Containing Hydraulic Cement.
   i. C700, Standard Specification for Vitrified Clay Pipe, Extra Strength, Standard Strength, and Perforated.
   j. D16, Standard Terminology for Paint, Related Coatings, Materials, and Applications.

©COPYRIGHT 2026 JACOBS

k. D1248, Standard Specification for Polyethylene Plastics Extrusion Materials for Wire and Cable.
l. D1784, Standard Specification for Rigid Poly(Vinyl Chloride) (PVC) Compounds and Chlorinated Poly(Vinyl Chloride) (CPVC) Compounds.
m. D2241, Standard Specification for Poly(Vinyl Chloride) (PVC) Pressure-Rated Pipe (SDR Series).
n. D2412, Standard Test Method for Determination of External Loading Characteristics of Plastic Pipe by Parallel-Plate Loading.
o. D3034, Standard Specification for Type PSM Poly(Vinyl Chloride) (PVC) Sewer Pipe and Fittings.
p. D3212, Standard Specification for Joints For Drain and Sewer Plastic Pipes Using Flexible Elastomeric Seals.
q. D3262, Standard Specification for "Fiberglass" (Glass-Fiber Reinforced Thermosetting-Resin) Sewer Pipe.
r. D4161, Standard Specification for "Fiberglass" (Glass-Fiber Reinforced Thermosetting-Resin) Pipe Joints using Flexible Elastomeric Seals.
s. E329, Standard Specification for Agencies Engaged in Construction Inspection, Testing, or Special inspection.
t. F477, Standard Specification for Elastomeric Seals (Gaskets) for Joining Plastic Pipe.
u. F679, Standard Specification for Poly(Vinyl Chloride) (PVC) Large-Diameter Plastic Gravity Sewer Pipe and Fittings.

1.02 DEFINITIONS

A. CCTV: Closed-Circuit Television.

B. DIP: Ductile Iron Pipe.

C. GRP: Glass-Fiber-Reinforced Thermosetting-Resin Pipe.

D. Pipe Stiffness Classification: Referred to as SN.

E. Pressure Class: Referred to as PN.

F. PVC: Polyvinyl Chloride Pipe.

G. RCP: Reinforced Concrete Pipe.

H. SDR: Standard Dimension Ratio.

I. VCP: Vitrified Clay Pipe.

©COPYRIGHT 2026 JACOBS

1.03 SUBMITTALS

A. Action Submittals:

1. Information on gasket polymer properties.
2. Tee fabrication details.
3. Application methods, application requirements, and chemical resistance data for coating and lining products.
4. Shop Drawings showing dimensions, pipe joints, fitting and special fitting pressure rating and thickness, size, coating and lining data

B. Informational Submittals:

1. Certificates:
   a. Manufacturer's Certificate of Compliance that products furnished meet requirements of this section.
   b. Certification of Calibration: Approved testing laboratory certificate if pressure gauge for hydrostatic test has been previously used. If pressure gauge is new, no certificate is required.
   c. Certified statement from manufacturer of gaskets, setting forth that basic polymer used in gaskets and test results of physical properties of compound are in accordance with ANSI / AWWA C900 for PVC pipe and AWWA C111 for ductile iron pipe.
2. Manufacturer's Written In-Plant Quality Control Program: Quality control procedures and materials testing to be used throughout manufacturing process. Submit prior to manufacture of any pipe for this Project.
3. Test or historical performance data to verify that joint design meets requirements of these Specifications.
4. Provide pipe test results with delivery of pipe. Do not deliver pipe not meeting test requirements to Project Site.
5. Manufacturer's written recommendations for pipe handling and installation.
6. Field Leakage Testing Plan: Submit at least 15 days in advance of testing and include at least the following:
   a. Testing dates.
   b. Piping systems and sections to be tested.
   c. Test type.
   d. Method of isolation.
   e. Method of conveying water from source to system being tested.
   f. Calculation of maximum allowable leakage for piping section(s) to be tested.
   g. Method for disposal of test water, if applicable.
7. CCTV Inspection Equipment in accordance with Section 33 01 30.16, Television Inspection of Sewer Pipelines.

©COPYRIGHT 2026 JACOBS

8. Leakage test results.
9. Pipe deflection test results.
10. CCTV inspection in accordance with Section 33 01 30.16, Television Inspection of Sewer Pipelines.

1.04 QUALIFICATIONS

A. In accordance with Section 33 01 30.16, Television Inspection of Sewer Pipelines.

PART 2 PRODUCTS

2.01 PIPING

A. As specified on Piping Data Sheets located at the end of this section as Supplement.

2.02 GASKET LUBRICANT

A. Lubricant shall be supplied by pipe manufacturer and no substitute or "or-equal" will be allowed.

2.03 LATERAL SERVICE CONNECTION PIPE AND FITTINGS

A. As specified on Piping Data Sheets located at the end of this section as Supplement.

B. Use one type of service connection pipe material throughout. No interchanging of pipe and fittings allowed.

C. Size shall be as determined by Engineer. In general, single or double residential services shall be 6 inches. Large commercial services, motel units, and certain multiple dwelling users shall be 6 inch services.

2.04 PIPE FOR WATERLINE CROSSINGS

A. PVC Pipe 15-inch Diameter and Under: As specified on Piping Data Sheets located at the end of this section as Supplement.

B. PVC Pipe 18-inch Through 24-inch Diameter: Not used.

C. Ductile Iron Pipe: As specified on Piping Data Sheets located at the end of this section as Supplement.

2.05 PIPE TO MANHOLE CONNECTOR

A. As specified in Section 33 05 13, Manholes.

©COPYRIGHT 2026 JACOBS

2.06 FLEXIBLE COMPRESSION COLLAR

A. Mechanical joint coupling with No. 305 stainless steel bands.

B. Manufacturers:

1. Calder, Inc., Bellflower, CA.
2. Fernco Inc., Davison, MI.
3. Pipeconx Division of Uniseal; Evansville, IN.

PART 3 EXECUTION

3.01 EXAMINATION

A. Notify Engineer immediately of manufacturing imperfections or damage caused by improper handling.

B. Verify size, pipe condition, and pipe class prior to installation of pipe.

3.02 PREPARATION

A. Inspect pipe and fittings prior to lowering into trench to ensure no cracked, broken, or otherwise defective materials are being used.

B. Remove foreign matter and dirt from inside of pipe and fittings and keep clean during and after laying. Wash ends of section clean with wet brush prior to joining sections of pipe.

3.03 INSTALLATION

A. General:

1. Install pipe sections in accordance with manufacturer’s recommendations.
2. Provide and use proper implements, tools, and facilities for safe and proper prosecution of Work.
3. Lower pipe, fittings, and appurtenances into trench, piece by piece, by means of crane, slings, or other suitable tools and equipment, in such a manner as to prevent damage to pipe materials, protective coatings, and linings. Do not drop or dump pipe into trenches.

B. Line and Grade:

1. Establish line and grade for pipe by use of lasers.
2. Measure for grade at pipe invert, not at top of pipe.
3. Do not deviate from line or grade, as shown on Drawings, more than 1/2 inch, provided that such variation does not result in a level or reverse sloping invert.

©COPYRIGHT 2026 JACOBS

C. Laying and Jointing:

1. Use gasket lubricant as recommended by gasket manufacturer.
2. Lay pipe upgrade with bell ends pointing in direction of laying.
3. When field cutting or machining pipe is necessary, use only tools and methods recommended by pipe manufacturer and approved by Engineer
4. After section of pipe has been placed in its approximate position for jointing, clean end of pipe to be joined, inside of joint, and rubber ring immediately before joining pipe.
5. Assemble joint in accordance with recommendations of manufacturer.
6. Apply sufficient pressure in making joint to assure that joint is correctly assembled as defined in standard installation instructions provided by pipe manufacturer. Inside joint space shall not exceed 50 percent of pipe manufacturer's recommended maximum allowance.
7. Place pipe to specified line and grade to form smooth flow line.
8. Ensure that bottom of pipe is in contact with bottom of trench for full length of each section.
9. Check for alignment and grade after joint has been made.
10. Place sufficient pipe bedding material to secure pipe from movement before next joint is installed.
11. When pipe is laid within movable trench shield, take precautions to prevent pipe joints from pulling apart when moving shield ahead.
12. When laying operations are not in progress, and at close of day's work close and block open end of last laid section of pipe to prevent entry of foreign material or creep of gasketed joints.
13. Take precautions to prevent "uplift" or floating of line prior to completion of backfill operation.
14. Connections between one pipe material and another shall be by means of flexible compression collar, installed in accordance with manufacturer's recommendations, or concrete closure collar.

D. Gasketed Joint Protection:

E. Connection to Structure or Manhole:

1. Plug or close off pipe stubbed with watertight plug.
2. Connect pipe to manhole with pipe to manhole connector in accordance with manufacturer's recommendations.

F. Crossing Waterlines: Where sewer crosses less than 18 inches below waterline, encase in concrete envelope for a minimum distance of 9 feet on each side of waterline.

©COPYRIGHT 2026 JACOBS

3.04 CONCRETE CLOSURE COLLAR

A. Use only when approved by Engineer and then only to make connections between dissimilar pipe or where standard rubber gasketed joints or flexible compression collars are impractical or unavailable.

B. Procedure:

1. Remove water from excavation. Placement of concrete in standing water will not be allowed.
2. Wash pipe to remove loose material.
3. Wrap and securely fasten light gauge sheet metal or building felt around pipe joint to ensure that concrete does not enter line.
4. Wet nonmetallic pipe thoroughly prior to concrete placement.
5. Placement shall be monolithic for each collar.
6. Place to minimum 6 inch thickness around outside diameter of pipe.
7. Extend concrete minimum of 12 inches on each side of joint.
8. Cure concrete, after initial set, by covering with well moistened earth.

3.05 SERVICE CONNECTION TEES

A. Install prior to leakage testing.

B. Install caps or plugs on tees.

C. Install approved tee outlets with gasketed type joint or adapter to join service connection pipe.

D. Install services to right-of-way line or as shown on Drawings.

3.06 SERVICE CONNECTION INSTALLATION

A. In general, service connections shall extend to street or alley right-of-way line, easement line, or as directed by Engineer.

B. Minimum Slope: 1/4 inch per foot.

C. Minimum Trench Depth: 4 feet at property line or on private property within permanent sewer easement. Engineer will determine required depth at end of line in each case.

D. Progress of Construction: Unless otherwise approved by Engineer, install service connection not more than 5 days after backfilling of sewer trench in block or equivalent 400-foot section of sewer.

E. Laying and Jointing of Service Connection Pipe and Fittings:

©COPYRIGHT 2026 JACOBS

1. Maximum deflection permissible with any one fitting shall not exceed 45 degrees, except by permission of Engineer.
2. Make service connection to sewer system at manhole when directed by Engineer. Where service connection pipe is connected to manhole or concrete structure, make connection so standard pipe joint is located not more than 1.5 feet from structure unless PVC is used.
3. Provide end of service connection line and fittings with standard watertight plug, cap, and stopper, suitably braced to prevent blow-off during hydrostatic or air testing.

F. First length of pipe out from tee on lateral or main shall not be greater than 3 feet in length unless PVC pipe is used.

G. Line and Grade for Service Connection Pipe and Fittings:

1. When possible, lay pipe uniformly between tee or top of riser section and end of service connection. If a field conflict prevents uniform installation, propose an alternative method of installation to Engineer for approval. Where minimum slopes are used, confirm accuracy of pipe grade with a good quality builder's level not less than 24 inches long.

H. Existing Service Connections:

1. Locate by prior to constructing tee in new sewer pipeline.
2. Disconnect from existing pipelines to be abandoned and reconnect them to new sewer pipeline.

3.07 CLEANING

A. Clean each section of completed sewer pipeline prior to testing.

B. Place screen or dam in downstream manhole of section being cleaned to catch debris.

C. Remove material from each manhole section before cleaning next section downstream.

D. Method: High velocity hydro-cleaning equipment.

E. Cleaning water may be discharged into existing sewer system after screening and removal of debris.

3.08 TESTING

A. General:

©COPYRIGHT 2026 JACOBS

1. Notify Engineer in writing 5 days in advance of testing. Perform testing in presence of Engineer.
2. Test pipe 18 inches in diameter and smaller for leakage using Hydrostatic Exfiltration or Pneumatic Test Methods at Contractor's option.
3. Pipe shall successfully pass leakage test prior to acceptance.
4. Test sections of constructed sewer between stations only after service connections, manholes, and backfilling are completed, except where indicated otherwise on drawings.
5. Isolate new pipelines that are connected to existing pipelines for testing. Install pipe plugs as required to allow section of new pipe to be pressure tested.
6. Furnish testing equipment and perform tests as approved by Engineer. Testing equipment shall provide observable and accurate measurement of test pressure and amount of water needed to maintain specified conditions.
7. Supply of Temporary Water: As stated in Section 01 50 00, Temporary Facilities and Controls.
8. Dispose of water used in testing in accordance with federal, state, and local requirements.

B. Hydrostatic Exfiltration Test:

1. If groundwater is present and is 2 feet and above the top of pipe for the segment being tested, conduct an infiltration test.
2. For VCP and RCP pipe, fill pipe test section 24 hours prior to time of testing, if desired, to permit normal absorption into pipe walls.
3. Procedure:
   a. Maximum filling velocity shall not exceed 0.25 foot per second, calculated based on full area of pipe.
   b. Expel air from piping system during filling.
   c. Apply and maintain specified test pressure with hydraulic force pump. Valve off piping system when test pressure is reached.
   d. Maintain hydrostatic test pressure continuously for **2** hours minimum, adding additional water only as necessary to maintain test pressure.
   e. Determine actual leakage by measuring quantity of water necessary to maintain specified test pressure for duration of test.
4. Measurement Accuracy: Plus or minus 1/8 gallon of water leakage under specified conditions.
5. PVC and Ductile Iron Pipe and Joints: Maximum allowable water loss is 0.8 gallon(s) per inch diameter per 1,000 feet of pipe, including service connections within test section per 2 hours. Modify allowable leakage as stated below if hydrostatic head is other than 6 feet.
6. Hydrostatic Head:

©COPYRIGHT 2026 JACOBS

a. At least 2 feet above maximum estimated groundwater level in section being tested, but no less than **6** feet above inside top of highest section of pipe in test section, including service connections.
b. In every case, determine height of water table at time of test by exploratory holes or such other methods approved by Engineer. Engineer will make final decision regarding test height for water in pipe section being tested.
c. If hydrostatic head is other than 6 feet, adjust allowable leakage as computed by criteria above by dividing square root of actual head by square root of 6 and multiplying result by allowable leakage stated above.

7. Length of Pipe Tested: Limit length such that pressure on invert of lower end of section does not exceed **16** feet of water column. In no case shall length be greater than 700 feet or distance between manholes when greater than 700 feet.
8. Dispose of test water in a manner that will not damage or interfere with adjacent property and in a manner acceptable with Engineer and regulatory agencies.

C. Pneumatic Testing for 18-inch and Smaller Diameter Pipe:

1. Equipment:
   a. Calibrate gauges with standardized test gauge provided by Contractor at start of each testing day. Engineer will witness calibration.
   b. Install compressor, air piping manifolds, gauges, and valves at ground surface.
   c. Provide pressure release device, such as rupture disc or pressure relief valve, to relieve pressure at 6 psi or less.
   d. Restrain plugs used to close sewer lines to prevent blowoff.
2. Procedure:
   a. No person shall enter manhole or structure, or occupy area above opening of manhole or structure where pipe is under pressure.
   b. Determine height of groundwater table at time of test.
   c. Slowly introduce air into pipe section until internal air pressure reaches 4 psi greater than average backpressure of groundwater submerging pipe.
   d. Allow 2 minutes minimum for air temperature to stabilize.
   e. Allowable leakage for sewers constructed of air-permeable materials, such a concrete or clay:
      1) When pressure is decreased to 3.5 psig, air pressure test shall begin.
      2) Test shall consist of measuring time in seconds for pressure in pipe to drop from 3.5 psig to 2.5 psig.

©COPYRIGHT 2026 JACOBS

3) Pipe leakage shall be considered acceptable if time in seconds for pressure drop is equal to or greater than required time as calculated below:

$K = 0.0111d^2L$
$C = 0.000392dL$

If C_t is less than or equal to 1.0, then time = K_t
If C_t is between 1.0 and 1.75, then time = K_t/C_t
If C_t is greater than or equal to 1.75, then time = $K_t/1.75$

a) Where: d = pipe diameter in inches
L = pipe length in feet
K = value for each length of pipe of a specific diameter
C = value for each length of pipe of a specific diameter
K_t = Sum of all K values
C_t = Sum of all C values

f. This method is based on allowable air loss rate of 0.003 cubic foot per minute (cfm) per square foot of internal pipe surface, with total air loss rate not less than 2.0 cfm nor greater than 3.5 cfm.

g. Allowable leakage for sewers constructed of nonair-permeable materials such as ductile iron, and polyvinyl chloride (PVC).
1) When nonair-permeable pipe is subjected to low pressure air test, time in seconds for pressure drop shall be equal to or greater than three times required time calculated using procedure above.
2) Defective Piping Sections: Replace and retest as specified.

D. Hydrostatic Joint Testing:

1. Conduct testing prior to installing PVC liner patch at joints.
2. Provide device specifically designed for testing of pipe joints and consisting of a metal cylinder, seal ring on each side of joint, and method of applying pressure to joint.
a. Manufacturer:
1) Mechanical Research and Design, Inc., Manitowoc, WI.
2) Cherne Industries, Inc., Minneapolis, MN.
3. Measurement Accuracy: Plus or minus **0.05** gallon(s) of water leakage under specified conditions.
4. Determine height of groundwater table at time of test.
5. Minimum Pressure, Each Joint: 2.5 psi above backpressure of groundwater.
6. Minimum Test Duration, Each Joint:

©COPYRIGHT 2026 JACOBS

a. 20 minutes for 60-inch diameter pipe and smaller.
b. 10 minutes for pipe larger than 60-inch diameter.

7. Maximum Leakage Per Joint: **0.0008**gallon(s) per hour per inch-diameter times length of distance between pipe joints.

E. Infiltration Test:

1. Where groundwater is 2 feet above top of a section of pipe, measure flow of water in pipe and rates of infiltration using a calibrated weir. Leave weir in line until flow rate has stabilized. Verify groundwater elevation.
   a. Maximum Acceptable Total Infiltration of Groundwater as Determined by Test: 50 gallons per 24 hours per inch-mile of pipe.
   b. Make infiltration tests on all sewer construction before placing lines in service and before making any connections to other sewers.
   c. If amount of infiltration into sewer(s) is in excess of maximum quantity specified above, repair joints, relay sewer (if necessary), or perform other remedial construction as required.
   d. Repeat test until each sewer meets specified infiltration amount.

F. Test Report Documentation:

1. Test date.
2. Pipe section tested.
3. Test method.
4. Test pressure.
5. Length of test.
6. Pressure or water loss.
7. Remarks, including:
   a. Leaks (type, location).
   b. Repair/replacement performed to remedy excessive leakage.
8. Signed by Contractor and Engineer to represent that test has been satisfactorily completed.

G. Subsequent Failure: Visible infiltration of groundwater following successful test shall be considered evidence that original test was in error or that subsequent failure of pipeline has occurred.

H. PVC Pipe Deflection Test:

1. Contractor is responsible for providing all labor and equipment for deflection testing.
2. Test deflection of pipe by manually pulling, with twine, a one-piece, nine-arm, go/no-go mandrel (sized in accordance with ASTM D3034)

©COPYRIGHT 2026 JACOBS

through pipe. Within 24 hours after compaction of backfill is complete, line shall be tested using 5 percent deflection mandrel. If line is satisfactory, it shall be retested using 7.5 percent deflection mandrel no less than 30 days following completion of compaction.

3. Correcting Deficiencies or Obstructions:
   a. Excavate to springline of pipeline and replace and recompact pipe zone material.
   b. Internal pipe rerounding or vibration will not be allowed.
   c. If pipe does not pass mandrel test after replacement of pipe zone material and trench backfill, re-excavate and replace pipeline.

I. Pipeline Lamping Test: Not used

3.09 INSPECTION

A. Television Pipeline Inspection:

   a. In accordance with specification section 33 01 30.16B Television Inspection of Sewer Pipelines.

B. Deficiencies Requiring Correction:

1. Variations in alignment greater than specified herein.
2. Joint separations greater than allowed by pipe manufacturer.
3. Visible infiltration.
4. Presence of debris or foreign objects.
5. Obvious damage or defects in pipeline.
6. Sags, bellies, or negative slopes.
7. Slope less than minimum allowable.

3.10 SUPPLEMENTS

A. The supplements listed below, following “End of Section,” are a part of this specification:

1. Data Sheets.

Number	Title
33 05 01.12.01	Ductile Iron Pipe (DIP) – Gravity Sanitary Sewer
33 05 01.12.02	Polyvinyl Chloride Pipe (PVC)—Gravity Sanitary Sewer

END OF SECTION

©COPYRIGHT 2026 JACOBS

SECTION 33 05 13
MANHOLES

PART 1 GENERAL

1.01 REFERENCES

A. The following is a list of standards that may be referenced in this section:

1. American Association of State Highway and Transportation Officials (AASHTO): M198, Standard Specification for Joints for Concrete Pipe, Manholes, and Precast Box Sections Using Preformed Flexible Joint Sealants.
2. ASTM International (ASTM):
   a. A36/A36M, Standard Specification for Carbon Structural Steel.
   b. A48/A48M, Standard Specification for Gray Iron Castings.
   c. A123/A123M, Standard Specification for Zinc (Hot-Dip Galvanized) Coatings on Iron and Steel Products.
   d. A536, Standard Specification for Ductile Iron Castings.
   e. A615/A615M, Standard Specification for Deformed and Plain Carbon-Steel Bars for Concrete Reinforcement.
   f. B139/B139M, Standard Specification for Phosphor Bronze Rod, Bar, and Shapes.
   g. C14, Standard Specification for Nonreinforced Concrete Sewer, Storm Drain, and Culvert Pipe.
   h. C31/C31M, Standard Practice for Making and Curing Concrete Test Specimens in the Field.
   i. C39/C39M, Standard Test Method for Compressive Strength of Cylindrical Concrete Specimens.
   j. C150/C150M, Standard Specification for Portland Cement.
   k. C192/C192M, Standard Practice for Making and Curing Concrete Test Specimens in the Laboratory.
   l. C387/C387M, Standard Specification for Packaged, Dry, Combined Materials for Mortar and Concrete.
   m. C443, Standard Specification for Joints for Concrete Pipe and Manholes Using Rubber Gaskets.
   n. C478, Standard Specification for Precast Reinforced Concrete Manhole Sections.
   o. C923, Standard Specification for Resilient Connectors Between Reinforced Concrete Manhole Structures, Pipes, and Laterals.
   p. C990, Standard Specification for Joints in Concrete Pipe, Manholes, and Precast Box Sections using Preformed Flexible Joint Sealants.

©COPYRIGHT 2025 JACOBS

q. C1311, Standard Specification for Solvent Release Sealants.
r. C1244, Standard Test Method for Concrete Sewer Manholes by the Negative Air Pressure (Vacuum) Test Prior to Backfill.
s. D698, Standard Test Methods for Laboratory Compaction Characteristics of Soil Using Standard Effort (12,400 ft-lbf/ft3 (600 kN-m/m3)).
t. D4101, Standard Specification for Propylene Injection and Extrusion Materials.
u. F593, Standard Specification for Stainless Steel Bolts, Hex Cap Screws, and Studs.
v. F594, Standard Specification for Stainless Steel Nuts.

1.02 SUBMITTALS

A. Action Submittals:

1. Shop Drawings including details of construction, reinforcing and joints, anchors, lifting, erection inserts, and other items cast into members.
2. Product Data:
   a. Concrete mix design.
   b. Manhole frame to structure seals.
   c. Manhole frame to structure anchor bolt.
   d. Rubber gaskets and sealants.
   e. External joint wrap.

B. Informational Submittals:

1. Experience Record:
   a. Precast concrete production capabilities.
   b. Evidence of current PCI plant certification.
2. Certificate of Compliance: Certify admixtures and concrete do not contain calcium chloride.
3. Test Reports: Precast manufacturer’s concrete test cylinders.
4. Certified load test data for precast manhole steps.
5. Manufacturer’s recommended installation instructions.
6. Field quality control report.

1.03 QUALITY ASSURANCE

A. Manufacturer Qualifications:

1. Precast Concrete and Precast Prestressed Concrete: Product of manufacturer with 10 years’ experience producing precast concrete products of quality specified.
2. Precast Plant: PCI certified plant with current certification.

©COPYRIGHT 2025 JACOBS

PART 2 PRODUCTS

2.01 GENERAL

A. Materials of Construction and Service Conditions:

1. Screws, Bolts, or Nuts: Type 304 stainless steel conforming to ASTM F593 and ASTM F594.
2. Gaskets: Internal and external seals shall be made of materials that have been proven to be resistant to the following exposures and conditions:
   a. Sanitary sewage.
   b. Corrosion or rotting under wet or dry conditions.
   c. Gaseous environment in sanitary sewers and at road surfaces including common levels of ozone, carbon monoxide, and other trace gases at installation site.
   d. Biological environment in soils and sanitary sewers.
   e. Chemical attack by road salts, road oil, and common street spillages or solvents used in street construction or maintenance.
   f. Temperature ranges, variations, and gradients in construction area.
   g. Variations in moisture conditions and humidity.
   h. Fatigue failure caused by a minimum of 30 freeze-thaw cycles per year.
   i. Vibrations because of traffic loading.
   j. Fatigue failure because of repeated variations of tensile, compressive and shear stresses, and repeated elongation and compression. Material shall remain flexible allowing repeated movement.
3. Materials shall be compatible with each other and manhole materials.
4. Designed to provide a 20-year service life.

B. Structures shall meet requirements of ASTM C478, this specification and the following:

1. Concrete:
   a. Cement: Meet requirements of ASTM C150/C150M.
   b. Compressive Strength:
      1) Minimum 4,000 psi.
      2) Minimum strength shall be confirmed at 7 days by making two standard cylinders per manhole for testing.
2. Reinforcement: Grade 60, unless otherwise specified.
3. Ring: Custom made with openings to meet indicated pipe alignment conditions and invert elevations.
4. Floor: Minimum 4 inches below pipe to provide clearance for grouting channels.

©COPYRIGHT 2025 JACOBS

5. Joint:
    a. Form joint contact services with machined castings.
    b. Surfaces shall be parallel with nominal 1/16-inch clearing and tongue equipped with recess for installation of O-ring rubber gasket.
6. Gasket: Meet requirements of ASTM C443.

2.02 PRECAST MANHOLES

A. Riser Sections:

1. Fabricate in accordance with ASTM C478.
2. Wall Thickness: Minimum 4 inches or 1/12 times inside diameter, whichever is greater.
3. Top and bottom surfaces shall be parallel.
4. Joints: Confined O-ring with rubber gaskets meeting ASTM C443**.**

B. Cone Sections:

1. Eccentric.
2. Same wall thickness and reinforcement as riser section.
3. Top and bottom surfaces shall be parallel.

C. Base Sections and Base Slab:

1. Base slab integral with sidewalls.
2. Fabricate in accordance with ASTM C478.

D. Manhole Extensions:

1. Concrete grade rings; maximum 6 inches high.
2. Fabricate in accordance with ASTM C478.

E. Joint Seal Manufacturers and Products:

1. Butyl Gaskets:
    a. Hamilton Kent, Sparks, NV; Kent-Seal No. 2.
    b. Henry Company, Houston, TX; Ram-Nek.
    c. Trelleborg Engineered Solutions, Park Hills, MO; NPC Bidco C-56.
2. Confined Plastic or Rubber O-Ring:
    a. As recommended by precasting manufacturer.
    b. Meet requirements of ASTM C443.

©COPYRIGHT 2025 JACOBS

3. Dampproofing: An exterior damp-proofing coating shall be factory applied to the exterior surfaces and bottom of the manhole structure. Damp-proofing material shall be cold-applied solvent based asphalt mastic brush or roller applied at a rate of 1-gal per 25SF. Damp-proofing material shall meet ASTM# D-4471 Type 1 and Federal Spec# SS-A-694d(AF). Damp-proofing shall be Karnak 83AF or approved equal.

F. Galvanized Steel Steps:

1. Fabricate from minimum 3/4-inch steel bar meeting ASTM A36/A36M.
2. Minimum Width: 12 inches, center-to-center of legs, drop pattern with 2-inch drop and 2-inch hook on embedment end.
3. Bends: 1-inch radius minimum, 2-inch radius maximum.
4. Embedment: 3-inch minimum and 4-1/2-inch minimum projection from face of concrete at point of embedment to center of step.
5. Galvanize after bending to meet ASTM A123/A123M.
6. Cast in manhole sections by manufacturer.
7. Load Test: Capable of withstanding ASTM C478 vertical and horizontal load tests.

2.03 MANHOLE FRAMES AND COVER

A. Castings:

1. Tough, close-grained gray iron, sound, smooth, clean, free from blisters, blowholes, shrinkage, cold shuts, and defects.
2. Cast Iron: ASTM A48/A48M Class 30B.
3. Ductile Iron: ASTM A536, Grade 60-40-12.
4. Plane or grind bearing surfaces to ensure flat, true surfaces.

B. Cover: See City of Waterbury Standard Frame and Cover with City of Waterbury Lettering. See Watertight Manhole Frame and Cover Detail 3305-726.

C. Capscrews for Watertight Covers: High temper phosphor bronze with 60,000 psi minimum tensile strength meeting ASTM B139/B139M.

D. Watertight Cover Gasket: Molded from high-quality rubber such as nitrile or EPDM.

2.04 MANHOLE FRAME CONNECTION TO STRUCTURE

A. Butyl Sealant:

1. Conform to ASTM C1311, or AASHTO M198 and ASTM C990.

©COPYRIGHT 2025 JACOBS

2. Trowelable or cartridge applied.
3. Manufacturers and Products:
   a. Tremco Commercial Sealants and Waterproofing, Beachwood, OH; Tremco Butyl Sealant.
   b. Bostik, Middleton, MA; Chem-Calk 300.
   c. Press-Seal Gasket Company, Fort Wayne, IN; EZ-Stik #3.

B. Frame to Structure Anchor Bolts:

1. 3/4-inch-diameter HAS stainless steel bolts; minimum 6-5/8-inch embedment.
2. Manufacturer and Product: Hilti; HVA Capsules Adhesive Anchoring System.

2.05 MORTAR

A. Standard premixed in accordance with ASTM C387/C387M, or proportion one-part portland cement to two-parts clean, well-graded sand that will pass a 1/8-inch screen.

B. Admixtures: May be included; do not exceed the following percentages of weight of cement:

1. Hydrated Lime: 10 percent.
2. Diatomaceous Earth or Other Inert Material: 5 percent.

C. Mix Consistency:

1. Tongue-and-groove Type Joint: Such that mortar will readily adhere to pipe.
2. Confined-groove (Keylock) Joint: Such that excess mortar will be forced out of groove and support is not provided for section being placed.

2.06 BACKFILL AROUND AND UNDER MANHOLE

A. Structural fill as specified in Section 31 23 23, Fill and Backfill.

2.07 FLEXIBLE JOINTS FOR SEALING PIPES IN MANHOLE

A. Manufacturers and Products:

1. NPC, Inc., Milford, New Hampshire; Kor-N-Seal flexible rubber boot with stainless steel accessories.
2. A-LOK Products, Inc., Tullytown, PA; Z-LOK XP or A-LOK flexible connectors.

©COPYRIGHT 2025 JACOBS

2.08 SOURCE QUALITY CONTROL

A. Prior to delivery of precast manhole sections to Site, yard permeability tests may be required at point of manufacture. Engineer or Owner will select precast sections to test from material which is to be supplied to Project. Test specimens shall be mat tested and meet permeability test requirements of ASTM C14.

B. Inspection:

1. Material Quality:
   a. Manufacturing process and finished sections shall be subject to inspection and approval by Owner and Engineer.
      1) Inspections may take place at manufacturer's plant, at Site after delivery, or at both.
      2) Sections not meeting requirements of this Specification or that are determined to have defects which may affect durability of structure are subject to rejection.
      3) Sections rejected after delivery shall be removed and replaced.
      4) Sections damaged after delivery will be rejected and if already installed shall be repaired to satisfaction of Owner and Engineer.
      5) If structure cannot be repaired it shall be removed and replaced entirely at Contractor's expense.
2. At the time of inspection the sections will be carefully examined for compliance with ASTM C478 and with manufacturer's drawings. Sections will be inspected for general appearance, dimensions, scratch strength, blisters, cracks, roughness, and soundness. Surface shall be dense and close textured.
3. Imperfections may be repaired, subject to approval of Engineer, after demonstration by manufacturer that strong and permanent repairs result.

PART 3 EXECUTION

3.01 GENERAL

A. Prior to installation inspect materials:

1. Sections not meeting requirements of this specification or that are determined to have defects which may affect durability of structure are subject to rejection.
2. Sections damaged after delivery will be rejected and if already installed shall be repaired to satisfaction of Owner and Engineer.
3. Remove and replace structure that cannot be repaired.

B. If needed, dewater excavation during construction and testing operations.

©COPYRIGHT 2025 JACOBS

3.02 EXCAVATION AND BACKFILL

A. Excavation: As specified in Section 31 23 16, Excavation.

B. Backfill: As specified in Section 31 23 23, Fill and Backfill.

3.03 INSTALLATION OF PRECAST MANHOLES

A. Concrete Base:

1. Precast:
   a. Place on a minimum of 8-inch compacted structural fill.
   b. Properly locate, ensure firm bearing throughout, and plumb first section.

B. Sections:

1. Inspect precast manhole sections to be joined.
2. Clean ends of sections to be joined.
3. Do not use sections with chips or cracks in tongue.
4. Locate precast steps in line with each other to provide continuous vertical ladder.

C. Preformed Plastic Gaskets or Rubber O-Ring:

1. Use only pipe primer furnished by gasket manufacturer.
2. Install gasket material in accordance with manufacturer’s instructions.
3. Completed Manhole: Rigid and watertight.

D. Dampproofing: Install in accordance with manufacturer’s instructions.

E. Extensions:

1. Provide on manholes in streets or other locations where change in existing grade may be likely.
2. Install to height not exceeding 12 inches.
3. Lay grade rings in mortar with sides plumb and tops level.
4. Seal joints with mortar as specified for sections and make watertight.

3.04 MANHOLE INVERT

A. Construct with smooth transitions to ensure unobstructed flow through manhole. Remove sharp edges or rough sections that tend to obstruct flow.

B. Where full section of pipe is laid through manhole, break out top section and cover exposed edge of pipe completely with mortar. Trowel mortar surfaces smooth.

©COPYRIGHT 2025 JACOBS

3.05 MANHOLE FRAMES AND COVERS

A. Install concrete grade rings as required to set covers flush with surface of adjoining pavement or ground surface, unless otherwise shown or directed.

B. Set frames in three equally spaced beads of butyl sealant that run full circumference of frame.

C. Anchor frame to manhole with specified bolts.

D. Install exterior manhole frame to structure seals in accordance with manufacturer's instructions. Seal shall cover grade rings.

3.06 WATERTIGHT MANHOLES

A. Unless otherwise noted, manholes covers shall be bolted down with sealing gasket.

3.07 MANHOLE PIPING

A. Drop Assembly: See Drawings for detail of installation requirements.

B. Flexible Joints:

1. Provide in pipe not more than 1-1/2 feet from manhole walls.
2. Where last joint of pipe is between 1-1/2 feet and 6 feet from manhole wall, provide flexible joint in manhole wall.

C. Stubouts for Future Connections:

1. Provide same type and class of pipe as specified for use in service connection, lateral, main, or trunk sewer construction. Where there are two different classes of pipe at manhole use higher strength pipe.
2. Grout pipe in precast walls or manhole base to provide watertight seal or use flexible joints as specified herein.
3. Maximum Length: 1-1/2 feet outside manhole wall.

3.08 MANHOLES OVER EXISTING PIPING

A. Maintain flow through existing pipelines at all times.

B. Concrete Pipe: Apply bonding agent on surfaces in contact with concrete.

C. Construct base under existing piping.

D. Construct manhole as detailed on Drawings.

©COPYRIGHT 2025 JACOBS

E. Apply minimum of two complete wraps of hydrophilic waterstop centered on pipe in wall.

F. Place a minimum of 24 inches of concrete around each pipe penetration outside manhole against undisturbed soil or compacted aggregate unless otherwise detailed.

G. Grout channel through manhole.

H. Saw cut out or demolish existing pipe within new manhole using method approved by Engineer.

I. Protect new concrete or grout for 7 days after placing concrete.

3.09 CONNECTIONS TO EXISTING MANHOLES

A. Core manhole bases and grouting as necessary.

B. Seal pipe in manhole using flexible connector.

C. Regrout to provide smooth flow into and through manholes.

D. Provide diversion facilities and perform work necessary to maintain flow during connection.

3.10 FIELD QUALITY CONTROL

A. Conduct negative air pressure (vacuum) test on all manholes in accordance with ASTM C1244. Conduct tests in presence of Engineer.

END OF SECTION

©COPYRIGHT 2025 JACOBS

SECTION 33 41 01.05 REINFORCED CONCRETE	
Item	**Description**
Pipe	ASTM C76, Wall B, class as shown. Mark each joint with pipe class. Rotating packer or platform not allowed.
Cement	ASTM C150, Type II, or ASTM C150, Type I, with fly ash; maximum 12 percent Tricalcium Aluminate, or ASTM C595 Rev A, Type IP, with fly ash; Cement: ASTM C150. Minimum 564 pounds per cubic yard without fly ash. Minimum 479 pounds per cubic yard with fly ash.
Ratio: Water to Cementitious Materials	Not over 0.49.
Fly Ash	ASTM C618, Class C or Class F, Tables 1 and 2 modified as follows: Loss on Ignition: Maximum 3 percent Water Requirement: Maximum 100 percent of control Ratio Percent CaO/Fe_2O_3: Maximum 1.5 or test cement fly ash mix in accordance with ASTM C1012. Mix: Equal to or better than ASTM C150, Type II cement. 85 pounds per cubic yard minimum, 160 pounds per cubic yard maximum. Test: ASTM C311 and ASTM C618.
Joints	ASTM C443 Rev A. Captive gasket in groove.
Rubber Gaskets	ASTM C443.
Tee Fittings	Reinforced concrete, rubber gasketed. Provide plug when service piping is not required.
Plugs	Removable. Removal shall provide a socket suitable for making a flexible jointed lateral connection or extension.
Circumferential Reinforcement	Not closer than 1 inch to inside surface of pipe. Area of outer circular reinforcing cage not less than 75 percent of inner cage.
Elliptical Reinforcement	Not allowed.

©COPYRIGHT 2026 JACOBS

SECTION 33 41 01.05 REINFORCED CONCRETE	
Item	**Description**
Source Quality Control Testing	Load Bearing 0.01-inch Crack, Compressive Strength and Absorption: ASTM C76. Load Bearing Ultimate: ASTM C76. Permeability: ASTM C497. Voids: Longitudinally sawcut one pipe from each 100 lengths of pipe manufactured in half with saw that will not damage the concrete or reinforcing steel. Inspect for voids adjacent to circumferential bars. Voids will be considered continuous if a 1/16-inch diameter pin can be inserted 1/4 inch deep. If voids exist adjacent to more than 10 percent of the circumferential bars, two additional pipes shall be tested. If either of the two pipes fail, the entire 100 lengths will be rejected.

END OF SECTION

©COPYRIGHT 2026 JACOBS

SECTION 33 44 13.13
CATCH BASINS

PART 1 GENERAL

1.01 REFERENCES

A. The following is a list of standards that may be referenced in this section:

1. American Welding Society (AWS): Code for Welding in Building Construction.
2. ASTM International (ASTM):
   a. A36/A36M, Standard Specification for Carbon Structural Steel.
   b. A48/A48M, Standard Specification for Gray Iron Castings.
   c. A615/A615M, Standard Specification for Deformed and Plain Carbon-Steel Bars for Concrete Reinforcement.
   d. C94/C94M, Standard Specification for Ready-Mixed Concrete.
   e. C387/C387M, Standard Specification for Packaged, Dry, Combined Materials for Mortar and Concrete.
   f. C478, Standard Specification for Circular Precast Reinforced Concrete Manhole Sections.

PART 2 PRODUCTS

2.01 CONCRETE

A. Type: Ready-mixed, conforming to ASTM C94/C94M, Alternate 2.

B. Compressive Field Strength: Not less than 2,500 psi at 28 days.

C. Maximum Size of Aggregate: 1-1/2 inch.

D. Slump: Between 2 inches and 4 inches.

E. Assumed Field Strength: 85 percent of strength of laboratory-cured cylinders.

2.02 FORMS

A. Exposed Surfaces: Plywood.

B. Other Surfaces: Steel, matched boards, plywood, or other acceptable material.

1. Trench walls, large rock, and earth are not acceptable form material.

C. Form vertical surfaces.

©COPYRIGHT 2026 JACOBS

D. Provide fillets on re-entrant angles.

2.03 REINFORCING STEEL

A. Conform to ASTM A615/A615M, Grade 60, deformed bars.

2.04 PRECAST UNITS

A. At the option of Contractor, approved precast units may be substituted for cast-in-place units.

B. Conform to ASTM C478. Submit details of proposed units to Engineer for review.

C. Concrete Risers for Extensions: 6 inches high maximum and of same quality as sections.

1. Confirm acceptability of risers with Engineer before installation.

2.05 MORTAR

A. Standard premixed mortar conforming to ASTM C387/C387M, Type S, or proportion one part portland cement to two parts clean, well-graded sand which will pass a 1/8-inch screen.

B. Admixtures may be used if not exceeding the following percentages of weight of cement:

1. Hydrated Lime: 10 percent.
2. Diatomaceous Earth or Other Inert Materials: 5 percent.

C. Consistency of Mortar: As required to readily adhere to concrete.

2.06 FRAMES AND GRATES

A. Frames and Grates for Catch Basins and Storm Drain Inlets: Steel conforming to ASTM A36/A36M.

B. Connections: Welded in accordance with requirements of current Code For Welding in Building Construction of the American Welding Society.

C. Clean and hot-dip galvanized after fabrication.

©COPYRIGHT 2026 JACOBS

2.07 FRAMES AND GRATINGS

A. Frames and Grates for Catch Basins and Storm Drain Inlets: Cast iron conforming to ASTM A48/A48, Class 30.

B. Bearing Surfaces: Clean and provide uniform contact.

C. Castings: Tough, close-grained gray iron, sound, smooth, clean, free from blisters, blowholes, shrinkage, cold shuts, and defects.

PART 3 EXECUTION

3.01 EXCAVATION AND BACKFILL

A. Excavate as required to accomplish construction. Reference Specification Section 31 23 16, Excavation. Backfill as specified for adjoining pipe trench. Reference Specification Section 31 23 23, Fill and Backfill.

3.02 CONSTRUCTION OF CATCH BASINS AND INLETS

A. Construct inlets and catch basins at locations shown and in accordance with Drawings. Construct tight and well-braced forms to dimensions and elevations required. Chamfer form corners.

B. Prior to placing concrete, remove water and debris from forms. Moisten forms just prior to placing concrete. Handle concrete from transporting vehicle to forms in a continuous manner as rapidly as practical without segregation or loss of ingredients. Immediately after placing, compact concrete with mechanical vibrator. Limit duration of vibration to time necessary to produce satisfactory consolidation without causing segregation.

C. Screed top surface of exposed slabs and walls. When initial water has been absorbed, float surfaces with wood float and lightly trowel with steel trowel to smooth finish free from marks or irregularities. Finish exposed edges with steel edging tool. Remove forms and patch defects in concrete with mortar mixed in same proportions as original concrete mix.

D. Use a membrane-forming curing compound to prevent loss of moisture for 7 days. Apply curing compound immediately after removal of forms or finishing of slabs. Protect concrete from damage during curing period.

©COPYRIGHT 2026 JACOBS

3.03 PLACING PRECAST UNITS

A. If material in bottom of trench is unsuitable for supporting unit, excavate and backfill to required grade with Structural Fill. Set units to grade at locations shown.

3.04 EXTENSIONS

A. Install watertight extensions as shown. Lay risers in mortar with sides plumb and tops to grade. Seal joints with mortar, with interior and exterior troweled smooth. Prevent mortar from drying out and cure by applying a curing compound.

3.05 INSTALLATION OF FRAMES AND GRATES

A. Set frames and grates at elevations indicated or as determined in field and in conformance with Drawings.

B. Frames may be cast in, or set in mortar.

3.06 CLEANING

A. Upon completion, clean structure of silt, debris, and foreign matter.

END OF SECTION

©COPYRIGHT 2026 JACOBS

TRUMPET BROOK SANITARY SEWER RELOCATION

100% DESIGN

MAY 2026

INDEX OF DRAWINGS		
No.	Drawing No.	Drawing Title
1	G-001	COVER SHEET & DRAWING INDEX
2	G-002	LEGEND AND NOTES
3	G-003	SANITARY SEWER RELOCATION KEY MAP
4	C-001	EXISTING CONDITIONS - ARDSLEY ROAD
5	C-002	EXISTING CONDITIONS - BUNKER HILL AVENUE
6	C-003	PLAN AND PROFILE 1 - ARDSLEY ROAD
7	C-004	PLAN AND PROFILE 2 - BUNKER HILL AVENUE
8	C-005	WORK ZONE LIMITS 1 - ARDSLEY ROAD
9	C-006	WORK ZONE LIMITS 2 - BUNKER HILL AVENUE
10	C-007	PAVEMENT RESTORATION PLAN
11	C-008	CONSTRUCTION DETAILS - 1
12	C-009	CONSTRUCTION DETAILS - 2
13	C-010	CONSTRUCTION DETAILS - 3
14	C-011	CONSTRUCTION DETAILS - 4
15	C-012	CONSTRUCTION DETAILS - 5
16	C-013	CONSTRUCTION DETAILS - 6
17	C-014	DETOUR PLAN - ARDSELEY ROAD
18	C-015	DETOUR PLAN - BUNKER HILL AVENUE



PROJECT LOCATION

SITE LOCATION
N.T.S

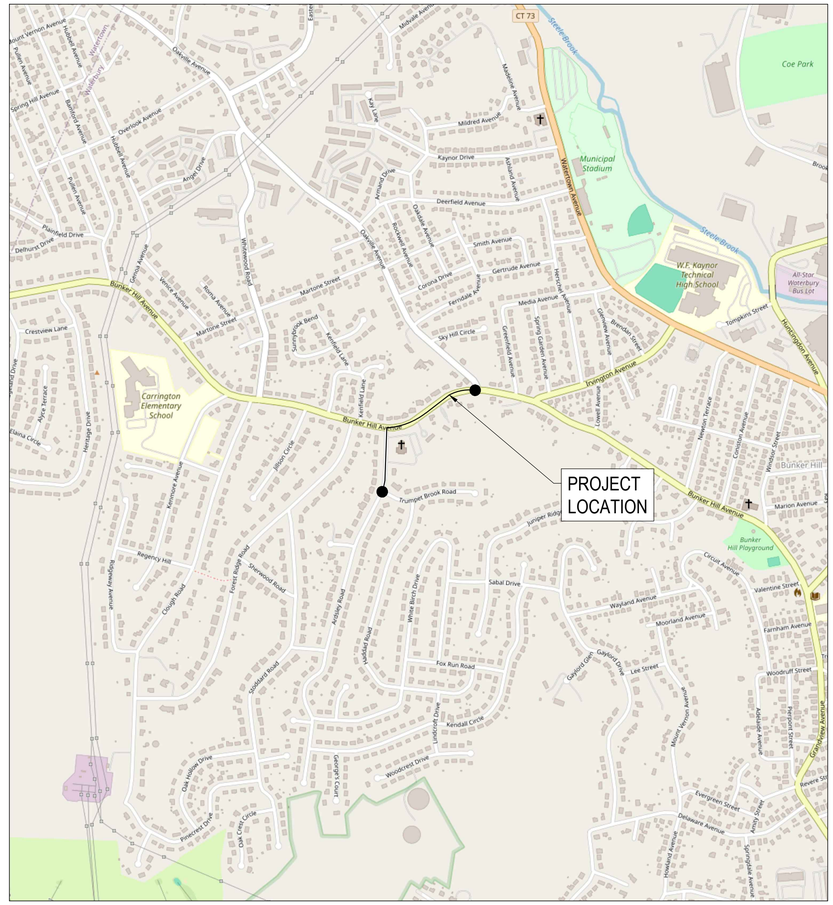

VICINITY MAP
N.T.S

NOT FOR CONSTRUCTION - FOR REVIEW ONLY

CONTACT INFORMATION FOR THIS PROJECT:
JACOBS ENGINEERING GROUP
CHRISTOPHER.GANT@JACOBS.COM
210 MUNICIPAL ROAD, WATERBURY, CT, 01708
PHONE: 860-790-9439

Jacobs

NO.	DATE	DSGN	DR	CHK	APVD
REVISION		SG	SK	RM	APVD
					BY
					XX

© JACOBS 2023. ALL RIGHTS RESERVED.
THIS DOCUMENT, AND THE IDEAS AND DESIGNS INCORPORATED HEREIN, AS AN INSTRUMENT OF PROFESSIONAL SERVICE, IS THE PROPERTY OF JACOBS AND IS NOT TO BE USED, IN WHOLE OR IN PART, FOR ANY OTHER PROJECT WITHOUT THE WRITTEN AUTHORIZATION OF JACOBS.
REUSE OF DOCUMENTS:

120 SAINT JAMES AVENUE
5TH FLOOR
BOSTON, MA 02116

Jacobs

TRUMPET BROOK
SANITARY SEWER RELOCATION
CITY OF WATERBURY
WATER POLLUTION CONTROL FACILITY
210 MUNICIPAL ROAD
WATERBURY, CT

COVER SHEET & DRAWING INDEX

VERIFY SCALE
BAR IS ONE INCH ON ORIGINAL DRAWING.
0 1"

DATE	04/24/2026
PROJ	D70880EN
DWG	G–001
SHEET	1 of 18

FILENAME: D70880EN PLOT DATE: 4/22/2026 PLOT TIME: 4:22 PM

LEGEND

RIGHT OF WAY / PROPERTY LINE	
CURBING	BIT. CURBING
EDGE OF PAVEMENT	
CHAINLINK FENCE	
MINOR CONTOUR	518
MAJOR CONTOUR	520
EXISTING SANITARY SEWER	
EXISTING SANITARY SEWER LATERAL	S S S
PROPOSED SANITARY SEWER	
PROPOSED SANITARY SEWER LATERAL	S S S
EXISTING STORM SEWER	
EXISTING GAS LINE	G G G
EXISTING WATER MAIN AND SERVICES	W W W
EXISTING TELEPHONE LINE	T T
EXISTING ELECTRIC LINE	U/G U/G U/G
EXISTING OVERHEAD WIRES	O/H O/H O/H
TREELINE	
LIGHT POLE	
CATCH BASIN	
EXISTING STORM SEWER MANHOLE	
EXISTING SANITARY SEWER MANHOLE	
PROPOSED SANITARY SEWER MANHOLE	
FIRE HYDRANT	
WATER GATE	WG
DECIDUOUS TREES	
CONIFEROUS TREES	
FIRST FLOOR ELEVATION	FFE
LANDSCAPE AREA	LSA
GAS GATE	GG
SIGN	
REBAR FOUND	RBF
IRON PIN FOUND	IPF
GRANITE MONUMENT FOUND	GMF
WATERBURY LAND RECORDS	W.L.R.
PARCEL ID	0157-0728-0422
RETAINING/STONEWALL	
SPOTGRADE	x 516.76
CROSSWALK	
GUYWIRE	
UTILITY POLE	
HANDHOLE	
BORING	
WATER LEVEL	

GENERAL NOTES:

1. THE ENGINEER MAY DIRECT THE CONTRACTOR TO VARY THE PROPOSED WORK DURING CONSTRUCTION TO ADDRESS EXISTING CONDITIONS.
2. ALL WORK IS TO BE PERFORMED IN ACCORDANCE WITH ALL LOCAL, STATE, AND FEDERAL CODES.
3. THE CONTRACTOR IS ADVISED THAT ALL LOCATIONS OF EXISTING PIPES, CONDUITS, UTILITIES, FOUNDATIONS AND UTILITY HOUSE SERVICES ARE NOT WARRANTED TO BE CORRECT AND THE CONTRACTOR SHALL HAVE NO BASIS FOR A CLAIM IF ACTUAL LOCATIONS DIFFER FROM THOSE SHOWN ON THE DRAWINGS. LOCATIONS OF EXISTING UTILITIES ARE SHOWN IN THEIR APPROXIMATE LOCATIONS AS REPRESENTED BY UTILITY DRAWINGS, PREVIOUS CONTRACT DRAWINGS, RECORD DRAWINGS AND CASTING LOCATIONS OBTAINED DURING THE SURVEY, AND ACTUAL LOCATIONS MAY VARY. IT IS UNDERSTOOD AND AGREED THAT THE CONTRACTOR SHALL MAKE EXAMINATIONS IN THE FIELD BY VARIOUS AVAILABLE METHODS AND SHALL OBTAIN ANY OTHER INFORMATION FROM UTILITY OWNERS AND OTHERS AS TO THE LOCATION OF ALL EXISTING FACILITIES, INCLUDING SUB-SURFACE STRUCTURES AND UTILITIES. UNDER NO CIRCUMSTANCES SHALL THE CONTRACTOR EXCAVATE IN ANY AREA PRIOR TO UTILITY CLEARANCE BEING OBTAINED.
4. "CALL BEFORE YOU DIG": THE CONTRACTOR IS REMINDED THAT "CALL BEFORE YOU DIG" MARK-OUTS BY THE APPROPRIATE UTILITY COMPANY ARE REQUIRED. THE CONNECTICUT GENERAL STATUTES REQUIRE NOTICE TO UTILITY COMPANIES OF PENDING EXCAVATION AT OR NEAR PUBLIC UTILITIES. THE CONTRACTOR SHALL CALL 1-800-922-4455 AT LEAST 72 HOURS PRIOR TO BEGINNING EXCAVATION.
5. "UTILITY IDENTIFICATION TAPE": AFTER PLACING APPROXIMATELY 2 FEET OF BACKFILL MATERIAL OVER ALL UTILITY PIPING, THE CONTRACTOR SHALL PLACE A 6-INCH WIDE NON-DETECTABLE STRIP OF DURABLE, COLOR CODED (RED FOR ELECTRIC; YELLOW FOR GAS OR OIL; ORANGE FOR COMMUNICATIONS; BLUE FOR WATER; GREEN FOR SANITARY AND STORM SEWER) UNDERGROUND UTILITY IDENTIFICATION TAPE IMPRINTED WITH AN APPROPRIATE WARNING INDICATING THE PRESENCE OF THE BURIED UTILITY.
6. STORM, SANITARY, WATER, GAS, TELEPHONE, CABLE, ELECTRICAL SERVICES, FIBER OPTIC COMMUNICATIONS, OVERHEAD UTILITIES AND OTHER UTILITY SERVICES TO BUILDINGS ARE NOT ALL SHOWN. UTILITY SERVICES TO BUILDINGS THAT ARE SHOWN ARE FOR INFORMATIONAL PURPOSES ONLY AND ARE NOT WARRANTED TO BE EXACT, NOR IS IT WARRANTED THAT ALL ARE SHOWN. EXACT LOCATIONS SHALL BE DETERMINED BY THE CONTRACTOR. THE CONTRACTOR SHALL ASSUME THAT EACH PROPERTY WILL HAVE SERVICE CONNECTIONS FOR THE VARIOUS UTILITIES. ALL SERVICES AND UTILITIES SHALL BE PROTECTED FROM DAMAGE AND SHALL BE RECONNECTED OR REPAIRED BY THE CONTRACTOR AT NO ADDITIONAL COST TO THE OWNER. THE CONTRACTOR SHALL PAY PARTICULAR ATTENTION TO SAFETY ISSUES RELATED TO ELECTRICAL FACILITIES, BOTH OVERHEAD AND UNDERGROUND.
7. THE CONTRACTOR SHALL BE RESPONSIBLE FOR SUPPORT AND PROTECTION OF EXISTING UTILITIES AND STRUCTURES, AS WELL AS ANY REPAIR AND/OR REPLACEMENT COSTS OF UTILITIES DAMAGED DURING CONSTRUCTION WHETHER ABOVE OR BELOW GRADE.
8. THE CONTRACTOR SHALL BE RESPONSIBLE FOR THE COORDINATION OF ALL UTILITY RELOCATION WORK. CLAIMS FOR EXTRAS WILL NOT BE ALLOWED FOR DELAY OF WORK DUE TO UTILITY COMPANY COORDINATION OR UTILITY RELOCATION WORK.
9. THE CONTRACTOR SHALL NOTIFY THE OWNER AND THE ENGINEER OF ANY SUBSURFACE UTILITY OR OTHER PIPE NOT SHOWN ON THE DRAWINGS THAT IS ENCOUNTERED DURING CONSTRUCTION.
10. THIS CONTRACT REQUIRES WORKING IN SEWER INFRASTRUCTURE. CONTRACTOR AND THEIR PERSONNEL SHALL FOLLOW ALL FEDERAL, STATE AND LOCAL REQUIREMENTS FOR SAFETY WHEN IN CONFINED SPACES. ALSO REFER TO RECOMMENDATIONS IN THE NATIONAL INSTITUTE FOR OCCUPATIONAL SAFETY AND HEALTH PUBLICATION NO. 80-106, "WORKING IN CONFINED SPACES".
11. THE CONTRACTOR SHALL BE RESPONSIBLE FOR MAINTAINING EXISTING FLOWS IN EXISTING SANITARY SEWERS, SEWER SERVICE LATERALS, STORM DRAINAGE SYSTEMS, AND FOR OBTAINING ALL PERMITS, AS SPECIFIED. THE CONTRACTOR SHALL PROVIDE SUBMITTAL FOR REVIEW BY THE ENGINEER DETAILING METHODS FOR MAINTAINING EXISTING FLOWS, INCLUDING BUT NOT LIMITED TO BYPASS PUMPING.
12. ALL DEWATERING SHALL BE DIRECTED TO SANITARY SEWERS AT LOCATIONS AS APPROVED BY THE OWNER. DO NOT DISCHARGE GROUND WATER TO STORM DRAINS. ALL DEWATERING ACTIVITIES SHALL COMPLY WITH THE TECHNICAL SPECIFICATIONS AND CTDEEP REGULATIONS. THE CONTRACTOR SHALL NOT COMMENCE DEWATERING DISCHARGE WITHOUT THE EXPRESS WRITTEN APPROVAL OF THE ENGINEER OR OWNER, AS SPECIFIED.
13. SILT SACKS SHALL BE PLACED AROUND ALL CATCH BASINS SUBJECT TO RUNOFF FROM CONSTRUCTION AREAS.
14. AT CONNECTION BETWEEN EXISTING AND NEW PIPES, SLEEVES, COUPLINGS AND ACCESSORIES NECESSARY FOR MAKING CONNECTIONS MAY NOT BE SHOWN IN THE DETAILS. THE CONTRACTOR SHALL FURNISH AND INSTALL ALL ITEMS AS NECESSARY FOR CONNECTING TO EXISTING PIPES AND AS INDICATED IN THE SPECIFICATIONS.
15. CONTRACTOR SHALL PERFORM CCTV INSPECTIONS OF ALL EXISTING SANITARY SEWERS AND STORM DRAIN PIPES LOCATED WITHIN THE LIMITS OF THE WORK PRIOR TO STARTING CONSTRUCTION. CCTV INSPECTIONS SHALL BE CONDUCTED IN ACCORDANCE WITH PACP STANDARDS AND THESE SPECIFICATIONS AND CONTRACTOR SHALL PROVIDE THE ENGINEER AND THE CITY THE CCTV VIDEOS AND INSPECTION REPORTS FOR REVIEW AT LEAST TWO WEEKS BEFORE BEGINNING CONSTRUCTION. FOLLOWING COMPLETION OF CONSTRUCTION, CONTRACTOR SHALL PERFORM CCTV REINSPECTION OF ALL EXISTING SANITARY SEWERS AND DRAIN PIPES, CCTV INSPECTION OF NEW SANITARY SEWER, AND PROVIDE THE VIDEOS AND REPORTS TO THE ENGINEER AND CITY FOR REVIEW.

EROSION AND SEDIMENTATION CONTROL NOTES:

1. CONTRACTOR SHALL BE RESPONSIBLE FOR IMPLEMENTING AND MAINTAINING EROSION CONTROL DEVICES DURING CONSTRUCTION PER THE CONTRACT SPECIFICATIONS AND STANDARD DETAILS.
2. EROSION CONTROL DEVICES SHALL BE INSTALLED TO THE SATISFACTION OF THE ENGINEER OR THE CITY OF WATURBURY PROJECT REPRESENTATIVE.

SURFACE RESTORATION GENERAL NOTES:

1. STONE WALLS, FENCES, MAIL BOXES, SIGNS, CURBING, SIDEWALKS, SIDEWALK RAMPS, STAIRS, WALKWAYS, LIGHT POLES, ETC. SHALL BE SUPPORTED OR REMOVED AND REPLACED AS NECESSARY TO PERFORM THE WORK. UNLESS OTHERWISE INDICATED, ALL SUCH WORK SHALL BE INCIDENTAL TO CONSTRUCTION OF THE PROJECT, AT NO ADDITIONAL COST TO THE OWNER.
2. COORDINATE THE ADJUSTMENT OF ALL EXISTING UTILITIES WITH EACH RESPONSIBLE OWNER PRIOR TO RECONSTRUCTION AND/OR PAVING OPERATIONS. ALL STRUCTURES SHALL BE RAISED TO FINISH GRADES PRIOR TO THE END OF THE CONSTRUCTION SEASON AND PRIOR TO FINISHING PAVING, AS DIRECTED BY THE ENGINEER.
3. ALL PAVEMENT DISTURBED OR DAMAGED BY THE CONTRACTOR'S OPERATIONS SHALL BE REPLACED IN ACCORDANCE WITH THE SPECIFICATIONS AND PER CT DOT GUIDELINES.
4. CONTRACTOR WILL MAINTAIN AND/OR PROVIDE OSHA SAFE PEDESTRIAN WALKWAYS IN ALL DISTURBED AREAS DURING CONSTRUCTION. PEDESTRIAN TRAFFIC SHALL BE ACCOMMODATED WHERE A SIDEWALK IS TO BE CLOSED FOR SAFETY.
5. THE CONTRACTOR SHALL TRANSFER ALL TEMPORARY BENCHMARKS AS NECESSARY.
6. WHERE EXISTING SIDEWALKS AND RAMPS ARE IMPACTED BY CONSTRUCTION, SIDEWALK AND RAMP RESTORATION TO INCLUDE RESTORATION BACK TO EXISTING CONDITIONS PRIOR TO CONSTRUCTION WITH RESPECT TO DEPTH, WIDTH AND MATERIALS. TRENCH BACKFILL UNDER SIDEWALKS, RAMPS, AND WALKWAYS SHALL BE BASED ON THE CITY STANDARD SPECIFICATIONS AND PER CT DOT GUIDELINES.
7. ALL AREAS DISTURBED BY THE CONTRACTOR BEYOND PAYMENT LIMITS SHALL BE RESTORED TO ORIGINAL CONDITIONS AT NO ADDITIONAL COST TO THE OWNER, UNLESS OTHERWISE APPROVED BY THE OWNER.

SURFACE RESTORATION GENERAL NOTES:

1. ALL WORK SHALL CONFORM TO THE REQUIREMENTS OF THE CONTRACT DRAWINGS AND SPECIFICATIONS. IN CASE OF DISCREPANCIES, THE CONTRACT DRAWINGS SHALL GOVERN.
2. THE CONTRACTOR SHALL BE RESPONSIBLE FOR THE PERFORMANCE OF ALL WORK ON THE CONTRACT DOCUMENTS, INCLUDING DEMOLITION AND REMOVAL AND INSTALLATION OF ALL WORK MATERIALS IN FULL COMPLIANCE WITH CODES, RULES AND REGULATIONS GOVERNING SAID WORK.
3. ALL DIMENSIONS ARE APPROXIMATE UNLESS SHOWN OTHERWISE. THE CONTRACTOR IS RESPONSIBLE FOR FIELD CHECKING ANY AND ALL DIMENSIONS APPLICABLE TO THIS WORK. ANY DISCREPANCIES SHALL BE BROUGHT TO THE ATTENTION OF THE ENGINEER PRIOR TO WORK COMMENCING. ALL DIMENSIONS REQUIRED TO FABRICATE AND INSTALL THE NEW PROPOSED ELEMENTS SHALL BE OBTAINED BY THE CONTRACTOR PER THE CITY OF WATERBURY SPECIFICATIONS.
4. UPON COMPLETION OF WORK, THE CONTRACTOR SHALL REMOVE ALL DEBRIS, EQUIPMENT AND UNUSED MATERIAL FROM THE SITE.
5. ALL DEMOLISHED MATERIAL, EXCEPT ITEMS DIRECTED BY THE OWNER TO BE SALVAGE, SHALL BE REMOVED FROM THE SITE AND DISPOSED OF IN ACCORDANCE WITH ALL FEDERAL, ESTATE AND LOCAL REQUIREMENTS.
6. THE CONTRACTOR SHALL BE RESPONSIBLE FOR MAINTENANCE OF THE CONSTRUCTION SITE AND THE AREAS OF WORK WHILE PERFORMING THE WORK UNDER THIS CONTRACT. CONSTRUCTION DEBRIS SHALL BE REMOVED FROM THE CONSTRUCTION SITE ON A DAILY BASIS. NO BURNING OF DEBRIS SHALL BE PERMITTED.
7. DURING ALL PHASES OF THE WORK ALL PRECAUTIONS SHALL BE TAKEN AS NECESSARY OR MAY BE REQUIRED TO PERMANENTLY PREVENT CONTAMINANT FROM ENTERING THE WATERWAY.
8. DISPOSAL OF HAZARDOUS OR CONTAMINATED MATERIALS, GROUNDWATER, OR SOIL ENCOUNTERED SHALL BE DISPOSED OF IN ACCORDANCE WITH ALL FEDERAL, STATE AND LOCAL REQUIREMENTS.
9. CONTRACTOR SHALL EXERCISE CARE TO PREVENT DAMAGE TO ANY MATERIALS OR STRUCTURES THAT ARE TO REMAIN IN PLACE. THE CONTRACTOR SHALL REPAIR ANY DAMAGE TO THESE MATERIALS AT NO ADDITIONAL COST TO THE OWNER.
10. ALL AREAS OUTSIDE OF THE LIMITS OF WORK SHOWN IN THE CONTRACT DRAWINGS, WHICH ARE DAMAGED BY THE WORK, SHALL BE RESTORED TO THEIR ORIGINAL CONDITION AT NO ADDITIONAL COST TO THE OWNER.
11. THE CONTRACTOR SHALL SCHEDULE AND COORDINATE ALL WORK AND DELIVERIES OF CONSTRUCTION MATERIALS SO TRAFFIC IS NOT IMPACTED ON LOCAL ROADWAYS. ACCESS TO CONSTRUCTION SITE SHALL BE ACCESSIBLE AND CLEAR AT ALL TIMES. CONSTRUCTION EQUIPMENT WILL NOT BE PERMITTED TO OBSTRUCT ROADWAYS AND OR PASSAGEWAYS.
12. THE CONTRACTOR SHALL PLAN AND SEQUENCE THE WORK IN SUCH A MANNER AS TO MINIMIZE DELAYS AND THE TIME NEEDED TO COMPLETE THE WORK UNDER THIS CONTRACT AND/OR ANY OTHER WORK BEING PERFORMED ON THE SITE.
13. CONTRACTOR SHALL ALLOW AND MAKE ANY NECESSARY ACCOMMODATIONS FOR THE INSPECTION OF WORK BY OWNER'S REPRESENTATIVE OR THE ENGINEER AT ANY TIME DURING THE INSTALLATION OF WORK GOVERNED BY THE CONTRACT DOCUMENTS.
14. UNLESS NOTED OTHERWISE ON THE CONTRACT DRAWINGS OR IN THE CONTRACT SPECIFICATIONS, ALL LABOR , EQUIPMENT, MATERIALS, AND ALL INCIDENTALS SHALL BE INCLUDED IN THE CONTRACTOR'S UNIT PRICES FOR THE COMPLETED WORK.
15. ALL DRAWING ELEVATIONS ARE REFERENCED TO NAVD 88 UNLESS OTHERWISE NOTED.

SURVEY/MAPPING NOTES:

1. SURVEY WAS PERFORMED BY BARTON & LOGUIDICE, LLC OF 41 SEQUIN DRIVE, GLASTONBURY, CT. FIELD SURVEY OCCURRED FROM XX TO XX. EXISTING STREET LINE BOUNDARIES WERE MAPPED IN ACCORDANCE WITH CLASS A2 HORIZONTAL STANDARDS, AND ABUTTING PARCEL LINES WERE MAPPED IN ACCORDANCE WITH CLASS D STANDARDS, AS DEFINED BY THE CONNECTICUT "MINIMUM STANDARDS OF ACCURACY, CONTENT AND CERTIFICATION FOR SURVEYS AND MAPS". TOPOGRAPHIC SURVEY WAS CONDUCTED TO CLASS T-2 TOPOGRAPHIC STANDARDS. UTILITY MAPPING WAS PREPARED IN ACCORDANCE WITH ASCE 38-22 STANDARD GUIDELINES FOR QUALITY LEVEL C MAPPING.
2. THE LOCATION, SIZE AND MATERIAL OF EXISTING PIPES, DUCTS, CONDUITS AND OTHER UNDERGROUND STRUCTURES AND THE LOCATION OF PROPERTY LINES SHOWN ON THESE PLANS ARE NOT WARRANTED TO BE EXACT, NOR IS IT WARRANTED THAT ALL ARE SHOWN. EXACT LOCATIONS SHALL BE DETERMINED BY THE CONTRACTOR.

NOT FOR CONSTRUCTION - FOR REVIEW ONLY

NO.	DATE	DSGN	DR	CHK	APVD	BY	APVD
		SG	SK	RM			XX

REVISION

© JACOBS 2023. ALL RIGHTS RESERVED.
REUSE OF DOCUMENTS: THIS DOCUMENT, AND THE IDEAS AND DESIGNS INCORPORATED HEREIN, AS AN INSTRUMENT OF PROFESSIONAL SERVICE, IS THE PROPERTY OF JACOBS AND IS NOT TO BE USED, IN WHOLE OR IN PART, FOR ANY OTHER PROJECT WITHOUT THE WRITTEN AUTHORIZATION OF JACOBS.

120 SAINT JAMES AVENUE
5TH FLOOR
BOSTON, MA 02116

TRUMPET BROOK
SANITARY SEWER RELOCATION
CITY OF WATERBURY
WATER POLLUTION CONTROL FACILITY
210 MUNICIPAL ROAD
WATERBURY, CT

LEGEND AND NOTES

1" = 60'

VERIFY SCALE

BAR IS ONE INCH ON ORIGINAL DRAWING.
0 1"

DATE	04/24/2026
PROJ	D70880EN
DWG	G-002
SHEET	2 of 18

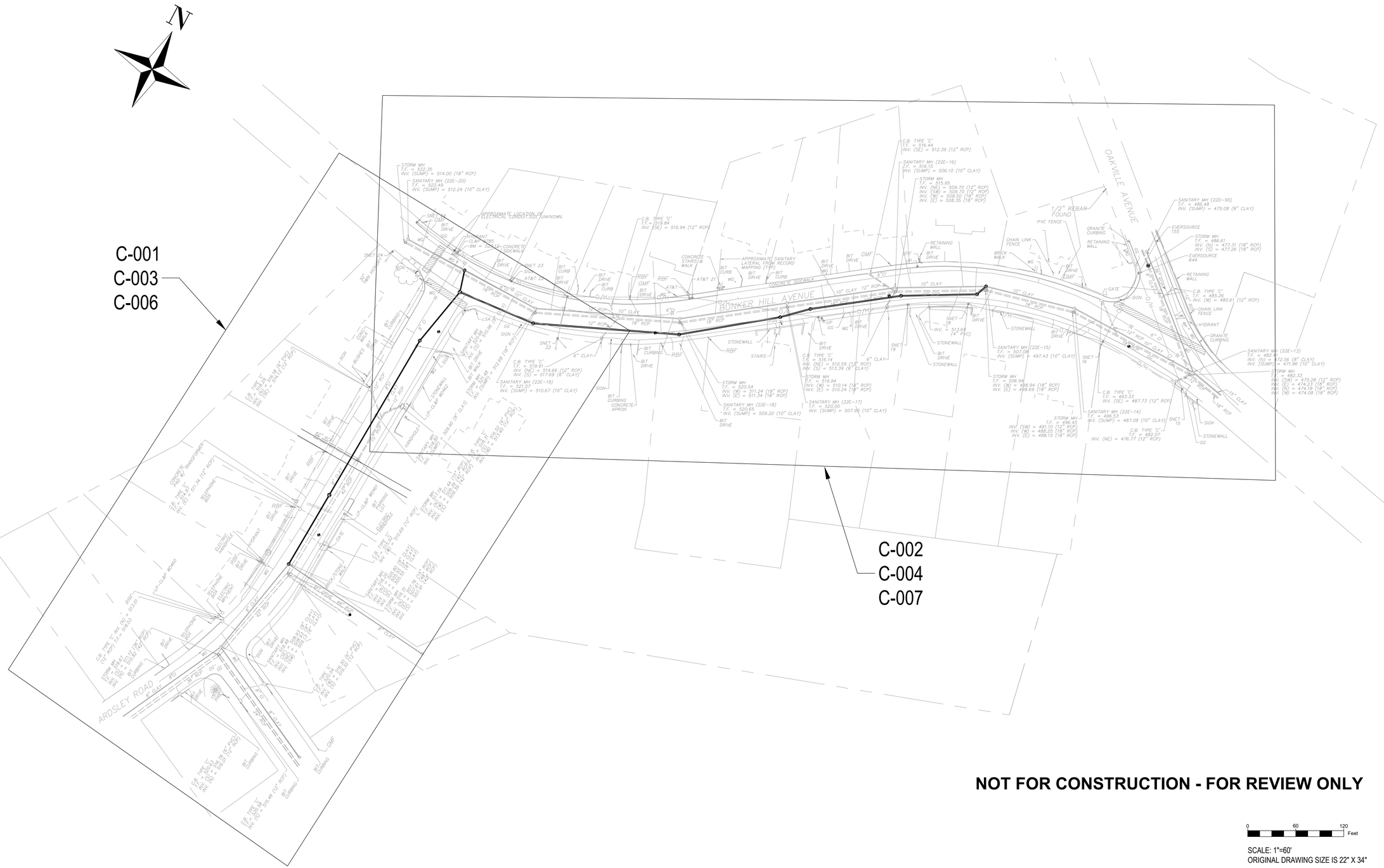
N
C-001
C-003
C-006
C-002
C-004
C-007
BUNKER HILL AVENUE
OAKVILLE AVENUE
ARDSLEY ROAD
STORM MH T.F. = 522.35 INV. (SUMP) = 514.00 (18" RCP)
SANITARY MH (22E-20) T.F. = 522.49 INV. (SUMP) = 512.24 (10" CLAY)
APPROXIMATE LOCATION OF ELECTRICAL CONDUIT, SIZE UNKNOWN.
C.B. TYPE 'C' T.F. = 519.84 INV. (SE) = 515.94 (12" RCP)
CONCRETE STAIRS/ & WALK
APPROXIMATE SANITARY LATERAL FROM RECORD MAPPING (TYP)
CONCRETE SIDEWALK
C.B. TYPE 'C' T.F. = 516.44 INV. (SE) = 512.39 (12" RCP)
SANITARY MH (22E-16) T.F. = 516.15 INV. (SUMP) = 506.10 (10" CLAY)
STORM MH T.F. = 515.95 INV. (NE) = 509.70 (12" RCP) INV. (SW) = 509.70 (12" RCP) INV. (W) = 508.50 (18" RCP) INV. (E) = 508.35 (18" RCP)
1/2" REBAR FOUND
PVC FENCE
CHAIN LINK FENCE
BRICK WALK
GRANITE CURBING
RETAINING WALL
SANITARY MH (22D-90) T.F. = 486.45 INV. (SUMP) = 475.08 (8" CLAY)
EVERSOURCE 155
STORM MH T.F. = 486.61 INV. (N) = 477.31 (18" RCP) INV. (S) = 477.26 (18" RCP)
EVERSOURCE 644
C.B. TYPE 'C' T.F. = 485.26 INV. (W) = 480.61 (12" RCP)
HYDRANT
SANITARY MH (22E-13) T.F. = 482.43 INV. (N) = 472.56 (8" CLAY) INV. (SUMP) = 471.96 (10" CLAY)
STORM MH T.F. = 482.33 INV. (SW) = 475.26 (12" RCP) INV. (E) = 474.23 (18" RCP) INV. (N) = 474.18 (18" RCP) INV. (W) = 474.08 (18" RCP)
SANITARY MH (22E-15) T.F. = 527.09 INV. (SUMP) = 497.43 (10" CLAY)
STORM MH T.F. = 506.94 INV. (W) = 498.94 (18" RCP) INV. (E) = 498.69 (18" RCP)
C.B. TYPE 'C' T.F. = 491.33 INV. (SE) = 487.73 (12" RCP)
SANITARY MH (22E-14) T.F. = 496.53 INV. (SUMP) = 487.08 (10" CLAY)
STORM MH T.F. = 496.45 INV. (SW) = 491.10 (12" RCP) INV. (W) = 488.25 (18" RCP) INV. (E) = 488.15 (18" RCP)
C.B. TYPE 'C' T.F. = 483.07 INV. (NE) = 476.77 (12" RCP)
STORM MH T.F. = 519.91 INV. (NE) = 514.66 (12" RCP) INV. (S) = 517.69 (6" CLAY)
SANITARY MH (22E-19) T.F. = 521.57 INV. (SUMP) = 510.67 (10" CLAY)
C.B. TYPE 'C' T.F. = 516.14 INV. (NE) = 510.59 (12" RCP) INV. (S) = 513.39 (6" CLAY)
STORM MH T.F. = 519.94 INV. (W) = 510.14 (18" RCP) INV. (E) = 510.24 (18" RCP)
SANITARY MH (22E-18) T.F. = 520.65 INV. (SUMP) = 509.20 (10" CLAY)
SANITARY MH (22E-17) T.F. = 520.00 INV. (SUMP) = 507.95 (10" CLAY)
STORM MH T.F. = 520.54 INV. (W) = 511.24 (18" RCP) INV. (E) = 511.34 (18" RCP)
SANITARY MH (22E-21) T.F. = 519.85 INV. (SUMP) = 512.68 (18" RCP)
SANITARY MH (22E-22) T.F. = 521.57 INV. (SUMP) = 509.80 (8" CLAY)
STORM MH T.F. = 521.57 INV. (W) = 513.57 (12" RCP) INV. (E) = 513.67 (12" RCP)
STORM MH T.F. = 519.19 INV. (W) = 514.44 (12" RCP) INV. (E) = 514.54 (12" RCP) INV. (S) = 509.94 (12" RCP)
C.B. TYPE 'C' T.F. = 519.34 INV. (W) = 514.84 (12" RCP) INV. (S) = 514.74 (12" RCP)
C.B. TYPE 'C' T.F. = 519.35 INV. (W) = 516.05

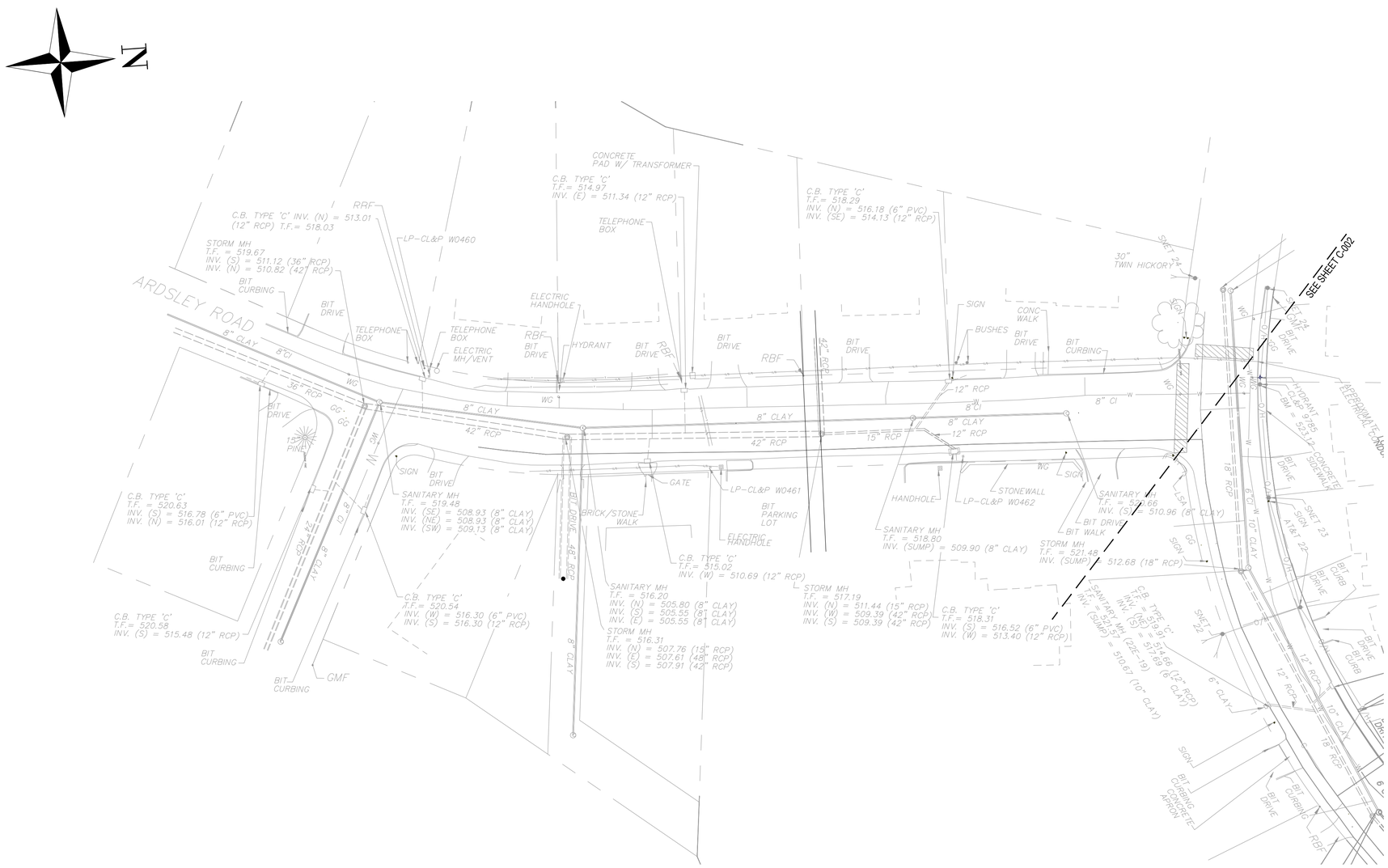

NOT FOR CONSTRUCTION - FOR REVIEW ONLY

0 40 80 Feet

SCALE: 1"=40'
ORIGINAL DRAWING SIZE IS 22" X 34"

NO.	DATE	REVISION	BY	APVD
DSGN	SG	DR	CHK	SK	APVD	RM
						XX

© JACOBS 2023. ALL RIGHTS RESERVED.
REUSE OF DOCUMENTS: THIS DOCUMENT, AND THE IDEAS AND DESIGNS INCORPORATED HEREIN, AS AN INSTRUMENT OF PROFESSIONAL SERVICE, IS THE PROPERTY OF JACOBS AND IS NOT TO BE USED, IN WHOLE OR IN PART, FOR ANY OTHER PROJECT WITHOUT THE WRITTEN AUTHORIZATION OF JACOBS.

120 SAINT JAMES AVENUE
5TH FLOOR
BOSTON, MA 02116

TRUMPET BROOK
SANITARY SEWER RELOCATION
CITY OF WATERBURY
WATER POLLUTION CONTROL FACILITY
210 MUNICIPAL ROAD
WATERBURY, CT

Jacobs

ARDSLEY ROAD

EXISTING CONDITIONS

1" = 40'	
VERIFY SCALE	
BAR IS ONE INCH ON ORIGINAL DRAWING. 0 1"	
DATE	04/24/2026
PROJ	D70880EN
DWG	C-001
SHEET	4 of 18

FILENAME: D70880EN PLOT DATE:5/1/2026 PLOT TIME:6:33 PM



NOT FOR CONSTRUCTION - FOR REVIEW ONLY

0 40 80 Feet

SCALE: 1"=40'
ORIGINAL DRAWING SIZE IS 22" X 34"

NO.	DATE	DSGN	DR	CHK	APVD	BY	APVD
			SG	SK	RM		XX

REVISION

© JACOBS 2023. ALL RIGHTS RESERVED.

REUSE OF DOCUMENTS: THIS DOCUMENT, AND THE IDEAS AND DESIGNS INCORPORATED HEREIN, AS AN INSTRUMENT OF PROFESSIONAL SERVICE, IS THE PROPERTY OF JACOBS AND IS NOT TO BE USED, IN WHOLE OR IN PART, FOR ANY OTHER PROJECT WITHOUT THE WRITTEN AUTHORIZATION OF JACOBS.

Jacobs
120 SAINT JAMES AVENUE
5TH FLOOR
BOSTON, MA 02116

TRUMPET BROOK
SANITARY SEWER RELOCATION
CITY OF WATERBURY
WATER POLLUTION CONTROL FACILITY
210 MUNICIPAL ROAD
WATERBURY, CT

BUNKER HILL AVENUE
EXISTING CONDITIONS

1" = 40'
VERIFY SCALE
BAR IS ONE INCH ON ORIGINAL DRAWING.
0 1"

DATE	04/24/2026
PROJ	D70880EN
DWG	C-002
SHEET	5 of 18

FILENAME: D70880EN PLOT DATE:5/1/2026 PLOT TIME:6:34 PM

NOTES:

1. CONTRACTOR SHALL REMOVE AND DISPOSE OF EXISTING 8-INCH SANITARY SEWER AND MANHOLE STRUCTURES AS THE INSTALLATION OF THE NEW 10-INCH SANITARY SEWER PROCEEDS FROM SMH-3 TO EXISTING SMH-1. EXISTING SMH-1 TO REMAIN.

2. THE NEW 10-INCH SANITARY SEWER AND MANHOLES IN ARDSLEY ROAD AND BUNKER HILL AVENUE FROM SMH-3 TO SMH-9 SHALL BE CONSTRUCTED AND SUCCESSFULLY TESTED (LOW PRESSURE TESTING FOR NEW SANITARY SEWER PIPE AND VACUUM TESTING FOR MANHOLES IN ACCORDANCE WITH SPECIFICATIONS) BEFORE CONSTRUCTING THE NEW SANITARY SEWER IN ARDSLEY ROAD FROM EXISTING SMH-1 TO SMH-3. THE INTENT IS TO ADVANCE CONSTRUCTION OF THE NEW SANITARY SEWER FROM DOWNSTREAM TO UPSTREAM FROM SMH-3 TO EXISTING SMH-1 AND TO RECONNECT EXISTING SANITARY SEWER SERVICES WITH A NEW TEE/WYE AND TEMPORARY CLEAN-OUT ACCESS AS THE NEW PIPE IS INSTALLED (REFER TO DETAIL FOR TEMPORARY CLEAN-OUT ACCESS). ONCE THE NEW 10-INCH SANITARY SEWER IS CONSTRUCTED FROM SMH-3 AND EXISTING SMH-1, THE CONTRACTOR SHALL COMPLETE TESTING OF THAT SECTION OF NEW SEWER BY INSTALLING PLUGS IN THE MAINLINE SEWER AND IN EACH NEW SEWER SERVICE IMMEDIATELY UPSTREAM OF THE NEW TEE-WYE CONNECTION, USING THE TEMPORARY CLEAN-OUT ACCESS FOR INSERTION POINTS FOR THE PLUGS. FOLLOWING SUCCESSFUL TESTING, THE CONTRACTOR SHALL REMOVE THE TOP FOUR (4) VERTICAL FEET OF EACH TEMPORARY CLEANOUT ACCESS PIPE AND PERMANENTLY CAP THE TOP OF THE PIPE. CONTRACTOR SHALL SUBMIT A PLAN TO THE ENGINEER FOR REVIEW PRIOR TO CONSTRUCTION DETAILING THE CONTRACTOR'S PROPOSED METHODS FOR PLUGGING THE TEMPORARY CLEAN-OUT ACCESS POINTS TO FACILITATE LOW PRESSURE AIR TESTING OF THE NEW 10-INCH SANITARY SEWER AND TEE-WYE CONNECTIONS.

3. EXISTING FLOWS TO EXISTING SMH-1 FROM THE SOUTH WILL CONTINUE TO BE CONVEYED TO THE EXISTING CROSS-COUNTRY SEWER UNTIL THE NEW 10-INCH SANITARY SEWER AND MANHOLES FROM EXISTING SMH-1 TO SMH-3 IN ARDSLEY ROAD ARE SUCCESSFULLY CONSTRUCTED, TESTED AND ACCEPTED. ONCE THE NEW 10-INCH SANITARY SEWER IN ARDSLEY ROAD IS SUCCESSFULLY TESTED AND ACCEPTED, CONTRACTOR SHALL DISCONNECT THE EXISTING 8-INCH EFFLUENT PIPE (I.E., THE EXISTING CROSS-COUNTRY SEWER) FROM EXISTING SMH-1 AND PERMANENTLY BULKHEAD THE OPENING IN THE MANHOLE USING HARD RED SEWER BRICK AND MORTAR, OR OTHER APPROVED EQUIVALENT MEANS, AND REDIRECT FLOWS TO THE NEW 10-INCH SANITARY SEWER. THE EXISTING CROSS-COUNTRY SEWER SHALL BE ABANDONED IN-PLACE AND THE END OF PIPE OPENING BULKHEADED WITH HARD RED SEWER BRICK AND MORTAR AND A FERNCO QC-112 PVC 12" FLEXIBLE QWIK CAP OR EQUAL.

4. CONTRACTOR SHALL SUPPORT AND PROTECT EXISTING STORM DRAIN INFRASTRUCTURE AND WATER MAIN DURING CONSTRUCTION OF THE NEW SANITARY SEWER. ANY SETTLEMENT, DISTURBANCE, OR DAMAGE TO THE EXISTING STORM DRAIN INFRASTRUCTURE OR WATER MAIN RESULTING FROM CONSTRUCTION OF THE NEW SANITARY SEWER SHALL BE CORRECTED BY THE CONTRACTOR AT NO ADDITIONAL COST TO THE OWNER.

5. ALL NEW PVC SANITARY SEWER MAIN AND SERVICES SHOWN ON DRAWINGS C-003 AND C-004 SHALL BE ANSI / AWWA C900 PVC (DR 25) PRESSURE PIPE CONFORMING TO SPECIFICATION 33 05 01.12.

6. PROPOSED CLOUGH BROOK STORM CULVERT TO BE CONSTRUCTED BY OTHERS IN THE FUTURE FOLLOWING CONSTRUCTION OF THE TRUMPET BROOK SEWER RELOCATION PROJECT.

NOT FOR CONSTRUCTION -

FOR REVIEW ONLY

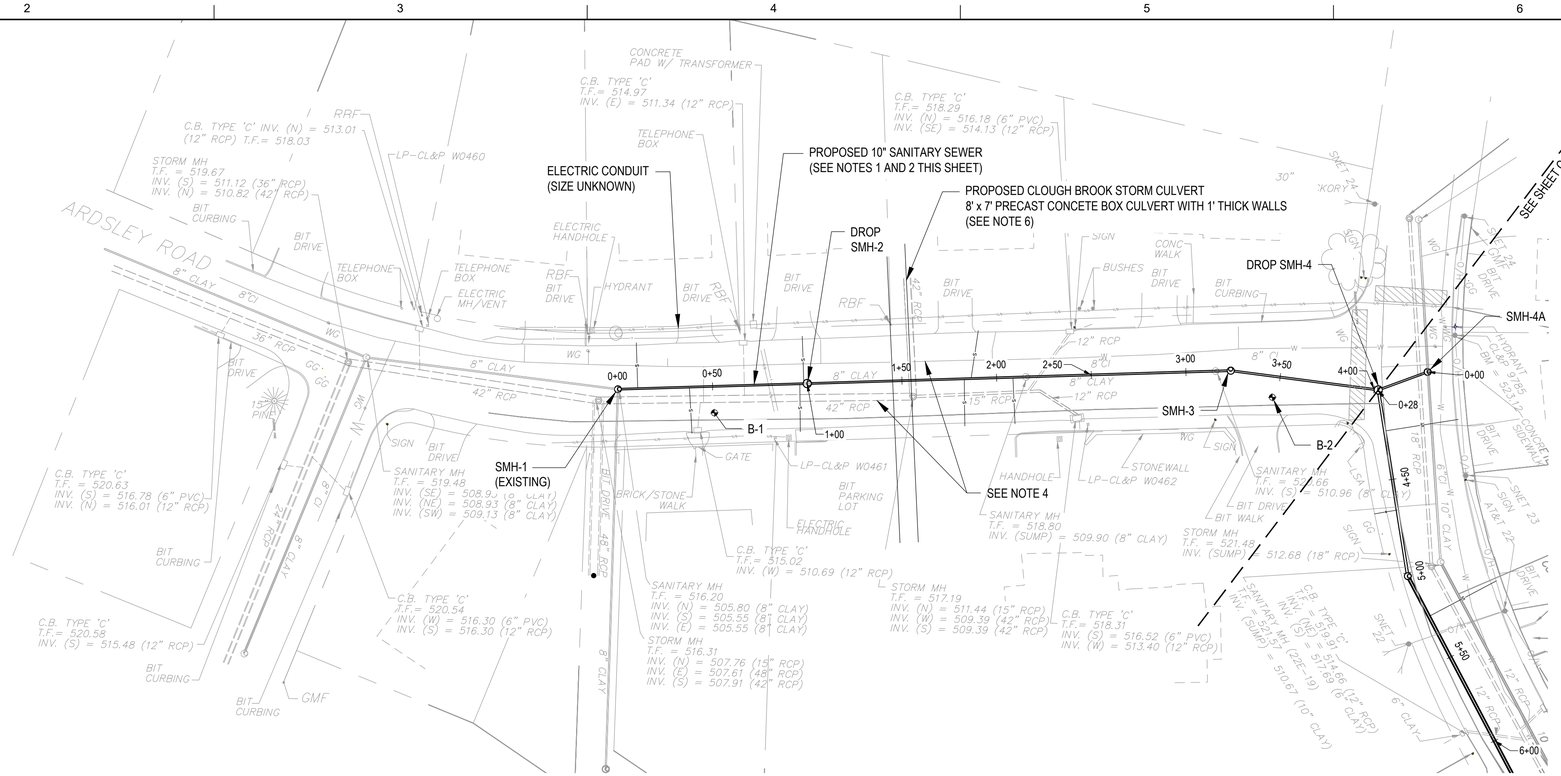

Proposed Sewer Alignment Profile

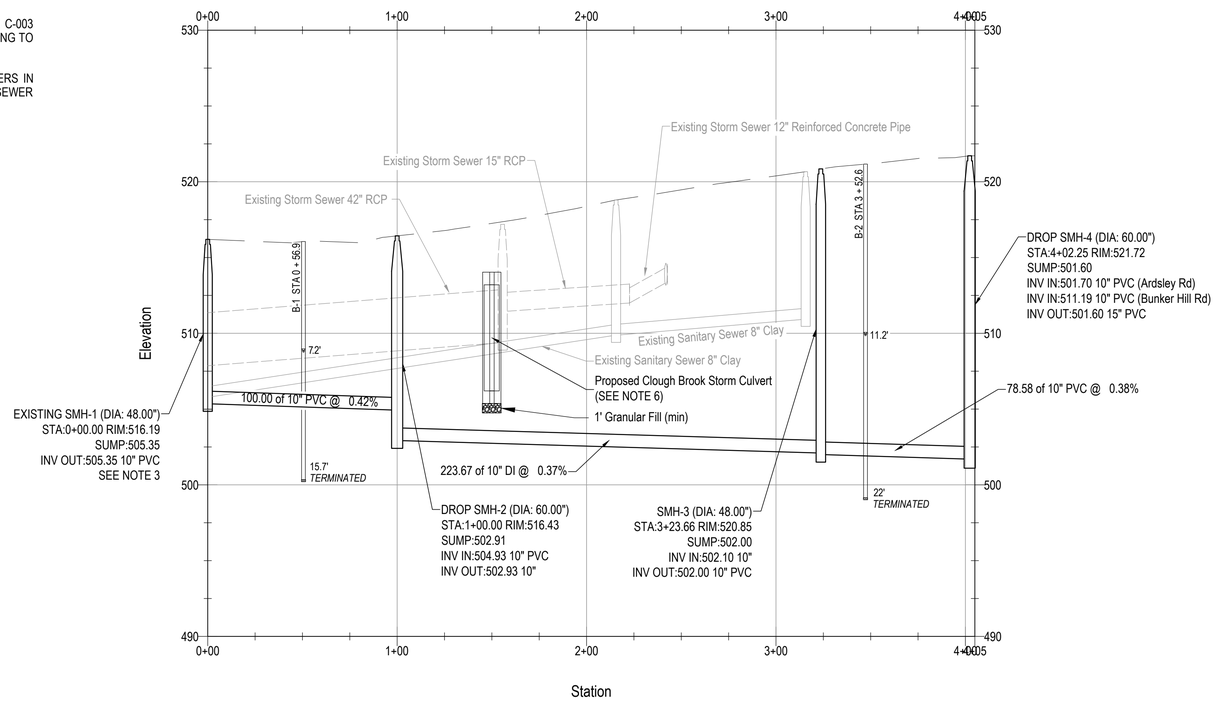

Proposed Alignment 4A TO 4 Profile

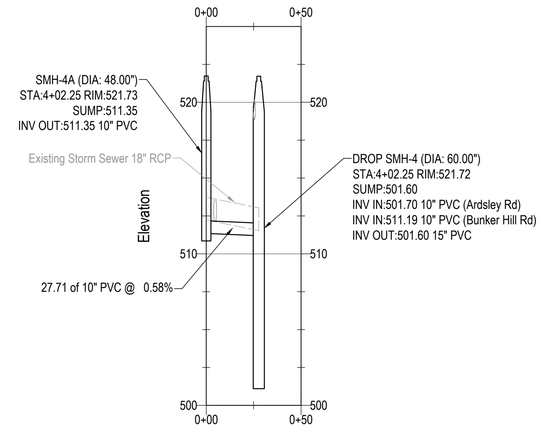

0 24.384 48.768 Feet
VERTICAL SCALE: 1"=5'

0 40 80 Feet
HORIZONTAL SCALE: 1"=40'
ORIGINAL DRAWING SIZE IS 22" X 34"

NO.	DATE	DSGN	DR	CHK	APVD	BY	APVD
		SG	SK	RM			XX

REVISION

© JACOBS 2023. ALL RIGHTS RESERVED.
REUSE OF DOCUMENTS: THIS DOCUMENT, AND THE IDEAS AND DESIGNS INCORPORATED HEREIN, AS AN INSTRUMENT OF PROFESSIONAL SERVICE, IS THE PROPERTY OF JACOBS AND IS NOT TO BE USED, IN WHOLE OR IN PART, FOR ANY OTHER PROJECT WITHOUT THE WRITTEN AUTHORIZATION OF JACOBS.

120 SAINT JAMES AVENUE
5TH FLOOR
BOSTON, MA 02116

Jacobs

TRUMPET BROOK
SANITARY SEWER RELOCATION
CITY OF WATERBURY
WATER POLLUTION CONTROL FACILITY
210 MUNICIPAL ROAD
WATERBURY, CT

ARDSLEY ROAD

PLAN AND PROFILE 1

1" = 40'

VERIFY SCALE

BAR IS ONE INCH ON ORIGINAL DRAWING.
0 1"

DATE	04/24/2026
PROJ	D70880EN
DWG	C-003
SHEET	6 of 18

FILENAME: D70880EN PLOT DATE:5/1/2026 PLOT TIME:6:34 PM

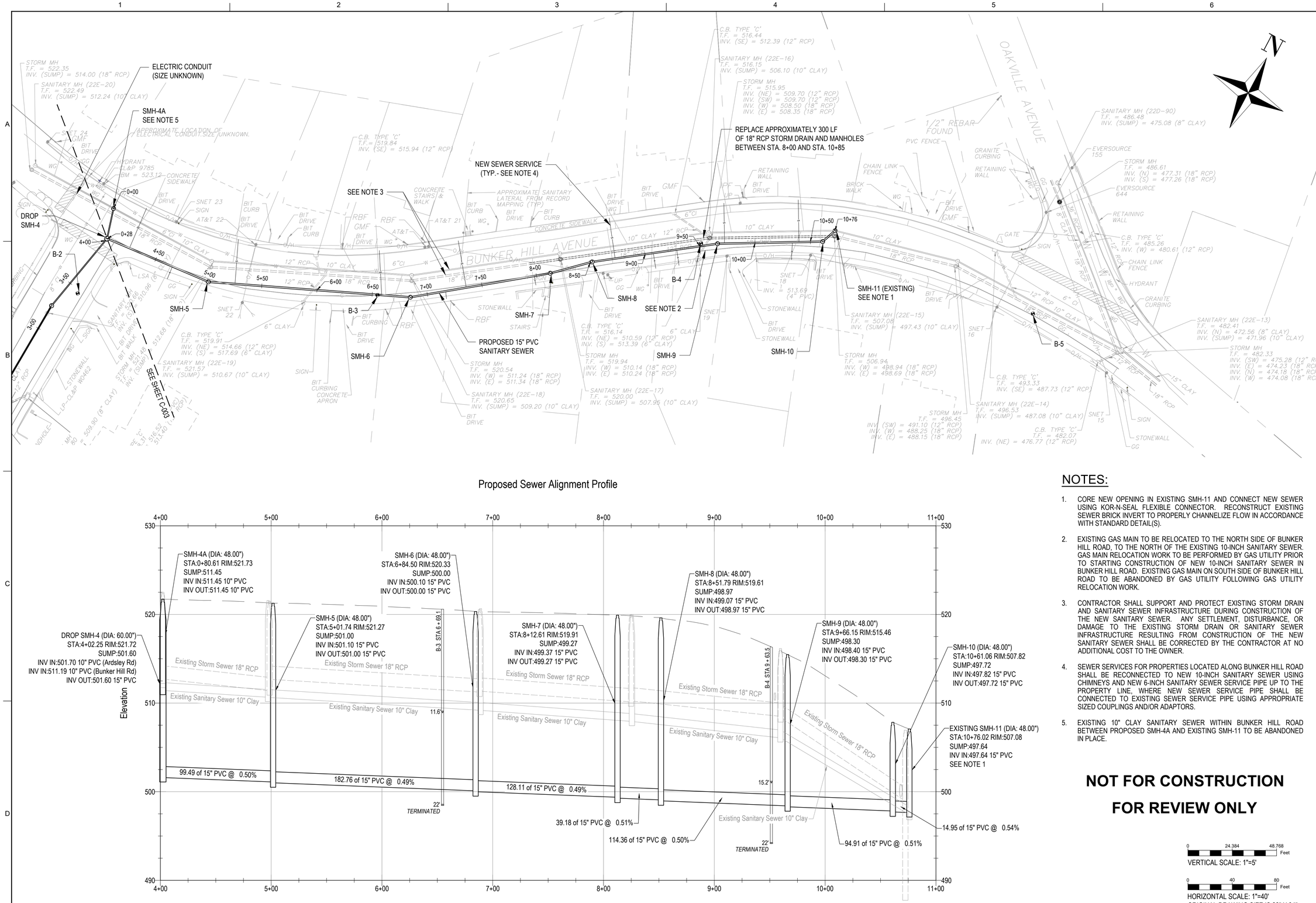

Proposed Sewer Alignment Profile

NOTES:

1. CORE NEW OPENING IN EXISTING SMH-11 AND CONNECT NEW SEWER USING KOR-N-SEAL FLEXIBLE CONNECTOR. RECONSTRUCT EXISTING SEWER BRICK INVERT TO PROPERLY CHANNELIZE FLOW IN ACCORDANCE WITH STANDARD DETAIL(S).
2. EXISTING GAS MAIN TO BE RELOCATED TO THE NORTH SIDE OF BUNKER HILL ROAD, TO THE NORTH OF THE EXISTING 10-INCH SANITARY SEWER. GAS MAIN RELOCATION WORK TO BE PERFORMED BY GAS UTILITY PRIOR TO STARTING CONSTRUCTION OF NEW 10-INCH SANITARY SEWER IN BUNKER HILL ROAD. EXISTING GAS MAIN ON SOUTH SIDE OF BUNKER HILL ROAD TO BE ABANDONED BY GAS UTILITY FOLLOWING GAS UTILITY RELOCATION WORK.
3. CONTRACTOR SHALL SUPPORT AND PROTECT EXISTING STORM DRAIN AND SANITARY SEWER INFRASTRUCTURE DURING CONSTRUCTION OF THE NEW SANITARY SEWER. ANY SETTLEMENT, DISTURBANCE, OR DAMAGE TO THE EXISTING STORM DRAIN OR SANITARY SEWER INFRASTRUCTURE RESULTING FROM CONSTRUCTION OF THE NEW SANITARY SEWER SHALL BE CORRECTED BY THE CONTRACTOR AT NO ADDITIONAL COST TO THE OWNER.
4. SEWER SERVICES FOR PROPERTIES LOCATED ALONG BUNKER HILL ROAD SHALL BE RECONNECTED TO NEW 10-INCH SANITARY SEWER USING CHIMNEYS AND NEW 6-INCH SANITARY SEWER SERVICE PIPE UP TO THE PROPERTY LINE, WHERE NEW SEWER SERVICE PIPE SHALL BE CONNECTED TO EXISTING SEWER SERVICE PIPE USING APPROPRIATE SIZED COUPLINGS AND/OR ADAPTORS.
5. EXISTING 10" CLAY SANITARY SEWER WITHIN BUNKER HILL ROAD BETWEEN PROPOSED SMH-4A AND EXISTING SMH-11 TO BE ABANDONED IN PLACE.

NOT FOR CONSTRUCTION

FOR REVIEW ONLY

0 24.384 48.768 Feet
VERTICAL SCALE: 1"=5'

0 40 80 Feet
HORIZONTAL SCALE: 1"=40'
ORIGINAL DRAWING SIZE IS 22" X 34"

NO.	DATE	DSGN	DR	CHK	APVD
		SG	SK	RM	XX

REVISION BY APVD

© JACOBS 2023. ALL RIGHTS RESERVED.
REUSE OF DOCUMENTS: THIS DOCUMENT, AND THE IDEAS AND DESIGNS INCORPORATED HEREIN, AS AN INSTRUMENT OF PROFESSIONAL SERVICE, IS THE PROPERTY OF JACOBS AND IS NOT TO BE USED, IN WHOLE OR IN PART, FOR ANY OTHER PROJECT WITHOUT THE WRITTEN AUTHORIZATION OF JACOBS.

120 SAINT JAMES AVENUE
5TH FLOOR
BOSTON, MA 02116

TRUMPET BROOK
SANITARY SEWER RELOCATION
CITY OF WATERBURY
WATER POLLUTION CONTROL FACILITY
210 MUNICIPAL ROAD
WATERBURY, CT

BUNKER HILL AVENUE
PLAN AND PROFILE 2

1" = 40'
VERIFY SCALE
BAR IS ONE INCH ON ORIGINAL DRAWING.
0 1"

DATE	04/24/2026
PROJ	D70880EN
DWG	C-004
SHEET	7 of 18

FILENAME: D70880EN PLOT DATE:5/1/2026 PLOT TIME:6:35 PM

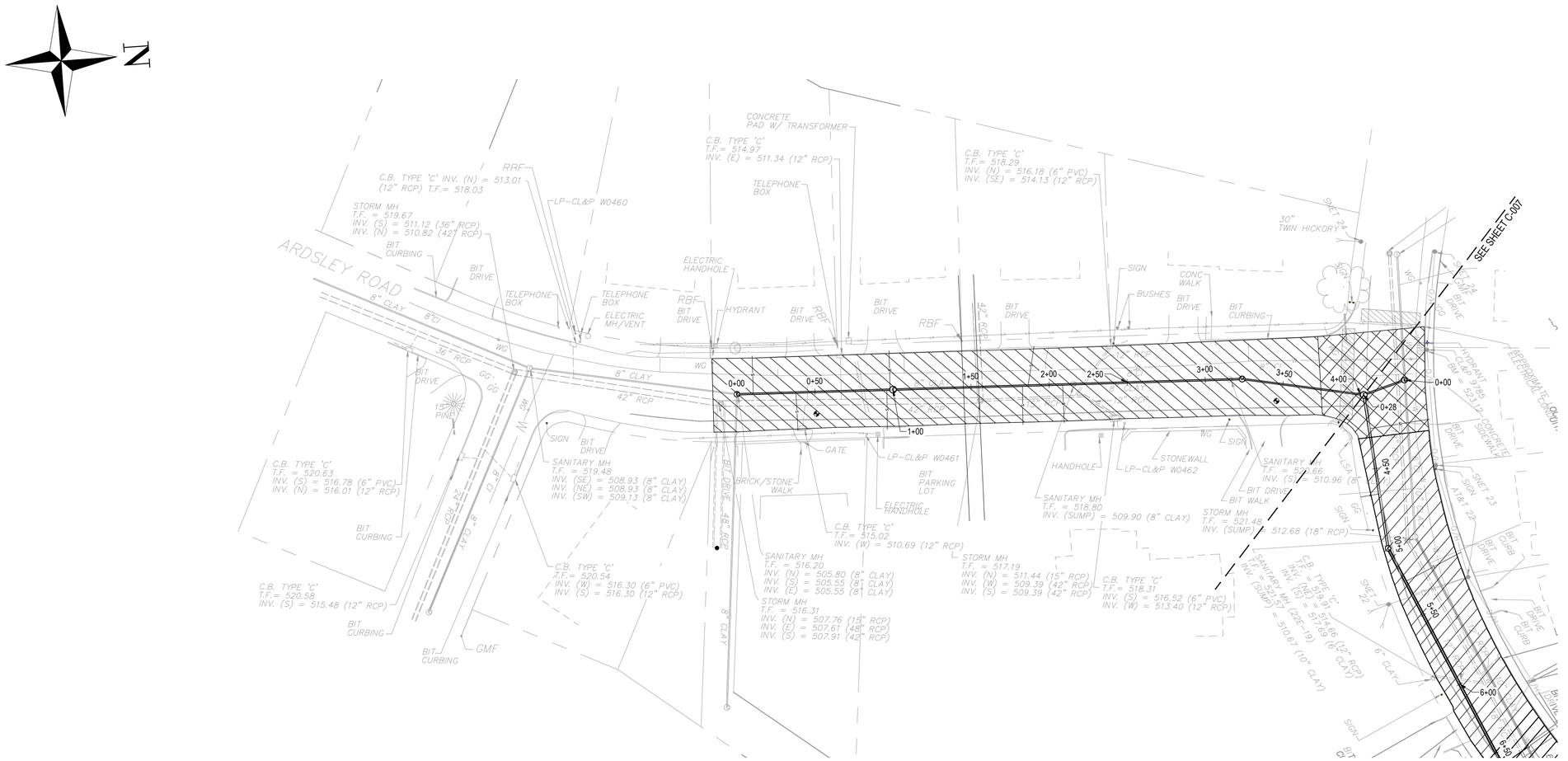

NOTES:

1. THESE WORK ZONE DRAWINGS ARE INTENDED TO PROVIDE GENERAL GUIDANCE REGARDING THE ANTICPATED WORK ZONE AND DO NOT CONSTITUE TRAFFIC MANAGMENT PLANS. CONTRACTOR SHALL PREPARE DETAILED TRAFFIC MANAGEMENT PLANS ACCORDING TO THEIR SPECIFIC MEANS AND METHODS AND SHALL SUBMIT TO THE ENGINEER AND CITY FOR REVIEW AND APPROVAL PRIOR TO IMPLMENTING ANY TRAFFIC MANAGEMENT OR CONTROL MEASURES.
2. MAINTAIN ONE LANE OF ALTERNATING TRAFFIC ON ARDSELEY ROAD DURING WORKING HOURS. CONTRACTOR TO BACKFILL AND PLATE TRENCH AND RESTORE TWO-WAY TRAFFIC AT THE END OF EACH WORK DAY.

LEGEND:

- APPROXIMATE WORK ZONE

NOT FOR CONSTRUCTION -

FOR REVIEW ONLY

0 40 80 Feet

HORIZONTAL SCALE: 1"=40'
ORIGINAL DRAWING SIZE IS 22" X 34"

NO.	DATE	REVISION	BY	APVD
DSGN	SG	DR	SK	CHK
				RM
				APVD
				XX

© JACOBS 2023. ALL RIGHTS RESERVED.
REUSE OF DOCUMENTS: THIS DOCUMENT, AND THE IDEAS AND DESIGNS INCORPORATED HEREIN, AS AN INSTRUMENT OF PROFESSIONAL SERVICE, IS THE PROPERTY OF JACOBS AND IS NOT TO BE USED, IN WHOLE OR IN PART, FOR ANY OTHER PROJECT WITHOUT THE WRITTEN AUTHORIZATION OF JACOBS.

120 SAINT JAMES AVENUE
5TH FLOOR
BOSTON, MA 02116

TRUMPET BROOK
SANITARY SEWER RELOCATION
CITY OF WATERBURY
WATER POLLUTION CONTROL FACILITY
210 MUNICIPAL ROAD
WATERBURY, CT

ARDSLEY ROAD
WORK ZONE LIMITS 1

1" = 40'	
VERIFY SCALE	
BAR IS ONE INCH ON ORIGINAL DRAWING. 0 1"	
DATE	04/24/2026
PROJ	D70880EN
DWG	C-005
SHEET	8 of 18

FILENAME: D70880EN PLOT DATE: 5/1/2026 PLOT TIME: 6:36 PM

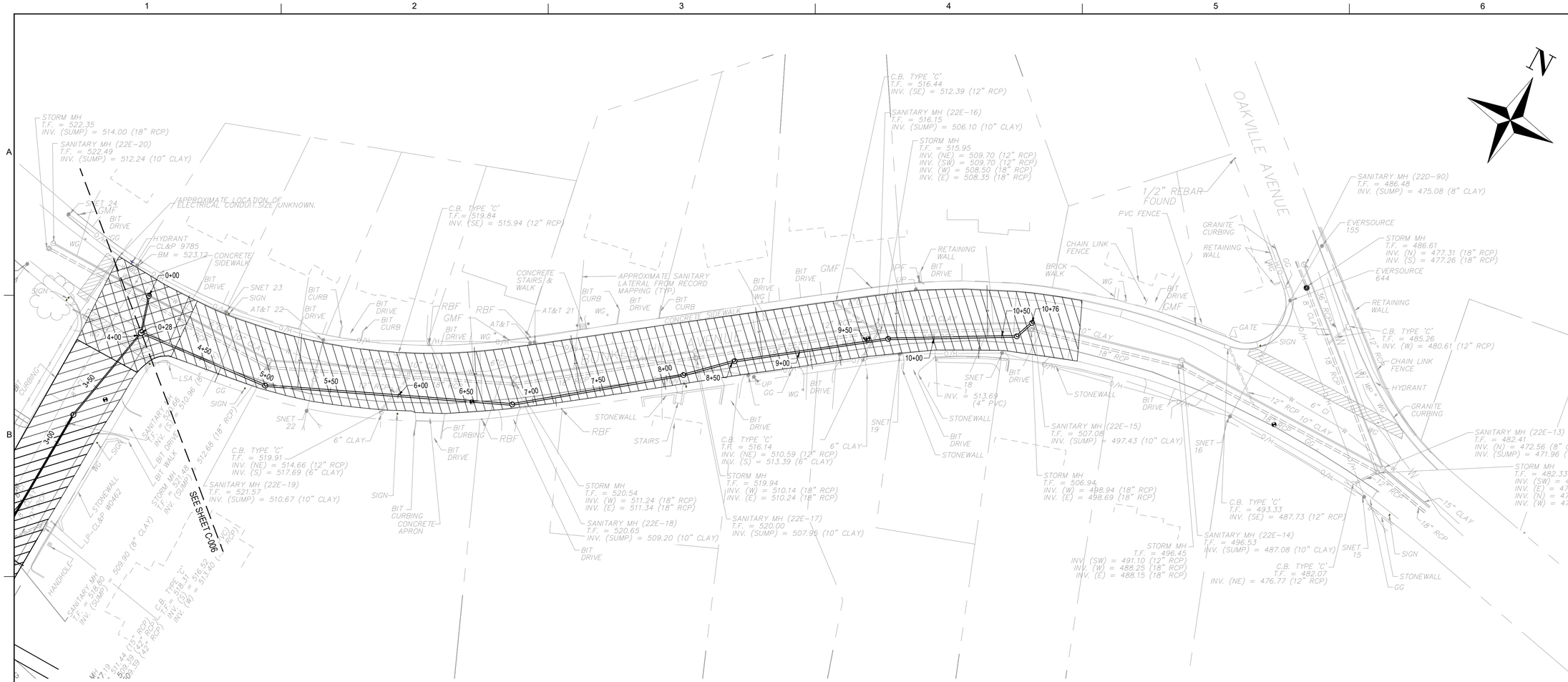

NOTES:

1. THESE WORK ZONE DRAWINGS ARE INTENDED TO PROVIDE GENERAL GUIDANCE REGARDING THE ANTICPATED WORK ZONE AND DO NOT CONSTITUE TRAFFIC MANAGMENT PLANS. CONTRACTOR SHALL PREPARE DETAILED TRAFFIC MANAGEMENT PLANS ACCORDING TO THEIR SPECIFIC MEANS AND METHODS AND SHALL SUBMIT TO THE ENGINEER AND CITY FOR REVIEW AND APPROVAL PRIOR TO IMPLMENTING ANY TRAFFIC MANAGEMENT OR CONTROL MEASURES.
2. MAINTAIN ONE LANE OF ALTERNATING TRAFFIC ON BUNKER HILL AVENUE DURING WORKING HOURS. CONTRACTOR TO BACKFILL AND PLATE TRENCH AND RESTORE TWO-WAY TRAFFIC AT THE END OF EACH WORK DAY.

LEGEND:

- APPROXIMATE WORK ZONE

NOT FOR CONSTRUCTION -

FOR REVIEW ONLY

0 40 80 Feet

HORIZONTAL SCALE: 1"=40'

ORIGINAL DRAWING SIZE IS 22" X 34"

NO.	DATE	DSGN	DR	CHK	APVD
		SG	SK	RM	APVD
					BY
		REVISION			XX

© JACOBS 2023. ALL RIGHTS RESERVED.
REUSE OF DOCUMENTS: THIS DOCUMENT, AND THE IDEAS AND DESIGNS INCORPORATED HEREIN, AS AN INSTRUMENT OF PROFESSIONAL SERVICE, IS THE PROPERTY OF JACOBS AND IS NOT TO BE USED, IN WHOLE OR IN PART, FOR ANY OTHER PROJECT WITHOUT THE WRITTEN AUTHORIZATION OF JACOBS.

120 SAINT JAMES AVENUE
5TH FLOOR
BOSTON, MA 02116

TRUMPET BROOK
SANITARY SEWER RELOCATION
CITY OF WATERBURY
WATER POLLUTION CONTROL FACILITY
210 MUNICIPAL ROAD
WATERBURY, CT

BUNKER HILL AVENUE
WORK ZONE LIMITS 2

	1" = 40'
	VERIFY SCALE
	BAR IS ONE INCH ON ORIGINAL DRAWING. 0 1"
DATE	04/24/2026
PROJ	D70880EN
DWG	C-006
SHEET	9 of 18

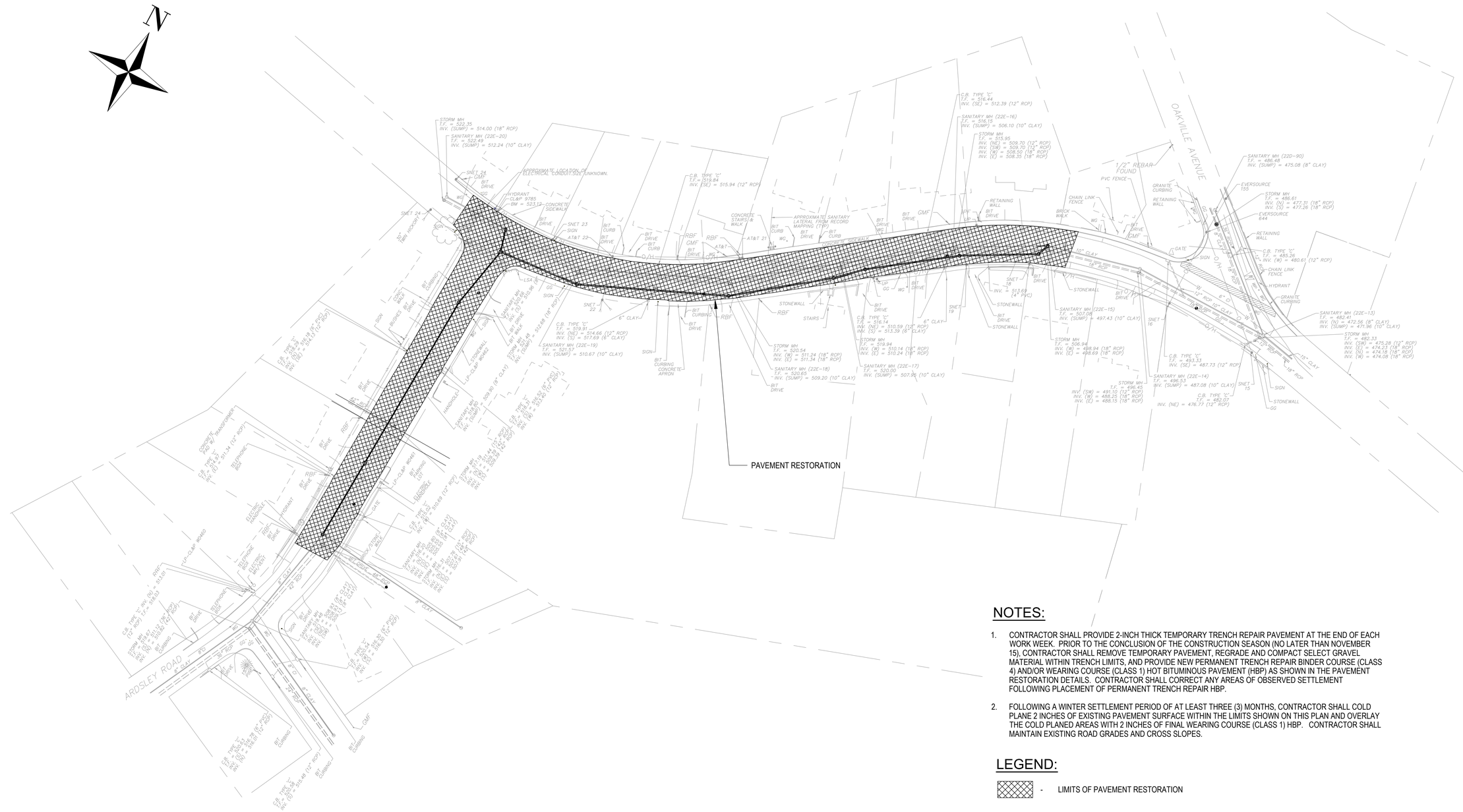
N
ARDSLEY ROAD
OAKVILLE AVENUE
PAVEMENT RESTORATION
STORM MH T.F. = 522.35 INV. (SUMP) = 514.00 (18" RCP)
SANITARY MH (22E-20) T.F. = 522.43 INV. (SUMP) = 512.24 (10" CLAY)
APPROXIMATE LOCATION OF ELECTRICAL CONDUIT SIZE UNKNOWN.
HYDRANT CL&P 9785 BM = 523.12
CONCRETE SIDEWALK
C.B. TYPE 'C' T.F.= 519.84 INV. (SE) = 515.94 (12" RCP)
CONCRETE STAIRS) & WALK
APPROXIMATE SANITARY LATERAL FROM RECORD MAPPING (TYP.)
COURAGE
C.B. TYPE 'C' T.F. = 516.44 INV. (SE) = 512.39 (12" RCP)
SANITARY MH (22E-16) T.F. = 516.15 INV. (SUMP) = 506.10 (10" CLAY)
STORM MH T.F. = 515.95 INV. (NE) = 509.70 (12" RCP) INV. (SW) = 509.70 (12" RCP) INV. (W) = 508.50 (18" RCP) INV. (E) = 508.35 (18" RCP)
1/2" REBAR FOUND
PVC FENCE
GRANITE CURBING
RETAINING WALL
CHAIN LINK FENCE
BRICK WALK
SANITARY MH (22D-90) T.F. = 486.48 INV. (SUMP) = 475.08 (8" CLAY)
EVERSOURCE 155
EVERSOURCE 644
STORM MH T.F. = 486.61 INV. (N) = 477.31 (18" RCP) INV. (S) = 477.26 (18" RCP)
C.B. TYPE 'C' T.F. = 485.26 INV. (W) = 480.61 (12" RCP)
HYDRANT
GATE
SIGN
STONEWALL
SNET 24
SNET 23
SNET 22
SNET 21
SNET 19
SNET 18
SNET 16
SNET 15
INV. = 513.69 (4" PVC)
C.B. TYPE 'C' T.F. = 519.91 INV. (NE) = 514.66 (12" RCP) INV. (S) = 517.69 (6" CLAY)
SANITARY MH (22E-19) T.F. = 521.57 INV. (SUMP) = 510.67 (10" CLAY)
C.B. TYPE 'C' T.F. = 516.14 INV. (NE) = 510.59 (12" RCP) INV. (S) = 513.39 (6" CLAY)
STORM MH T.F. = 519.94 INV. (W) = 510.14 (18" RCP) INV. (E) = 510.24 (18" RCP)
SANITARY MH (22E-17) T.F. = 520.00 INV. (SUMP) = 507.95 (10" CLAY)
STORM MH T.F. = 520.54 INV. (W) = 511.24 (18" RCP) INV. (E) = 511.34 (18" RCP)
SANITARY MH (22E-18) T.F. = 520.63 INV. (SUMP) = 509.20 (10" CLAY)
SANITARY MH (22E-15) T.F. = 507.08 INV. (SUMP) = 497.43 (10" CLAY)
STORM MH T.F. = 506.94 INV. (W) = 498.94 (18" RCP) INV. (E) = 498.69 (18" RCP)
STORM MH T.F. = 496.45 INV. (SW) = 491.10 (12" RCP) INV. (W) = 488.25 (18" RCP) INV. (E) = 488.15 (18" RCP)
SANITARY MH (22E-14) T.F. = 496.51 INV. (SUMP) = 487.08 (10" CLAY)
C.B. TYPE 'C' T.F. = 493.33 INV. (SE) = 487.73 (12" RCP)
C.B. TYPE 'C' T.F. = 482.07 INV. (NE) = 476.77 (12" RCP)
SANITARY MH (22E-13) T.F. = 482.47 INV. (N) = 472.56 (8" CLAY) INV. (SUMP) = 471.96 (10" CLAY)
STORM MH T.F. = 482.33 INV. (SW) = 475.28 (12" RCP) INV. (E) = 474.23 (18" RCP) INV. (N) = 474.18 (18" RCP) INV. (W) = 474.08 (18" RCP)
C.B. TYPE 'C' T.F. = 519.10 INV. (N) = 514.60 (12" RCP) INV. (W) = 514.50 (12" RCP)
STORM MH T.F. = 516.63 INV. (S) = 511.13 (18" RCP) INV. (E) = 511.03 (18" RCP)
STORM MH T.F. = 509.80 (8" CLAY)
C.B. TYPE 'C' T.F. = 514.14 (12" RCP) INV. (W) = 504.94 (12" RCP)
C.B. TYPE 'C' T.F. = 506.05 (6" PVC) INV. (W) = 504.55 (12" RCP)
C.B. TYPE 'C' T.F. = 504.36 (6" PVC) INV. (W) = 500.96 (12" RCP)
C.B. TYPE 'C' T.F. = 504.34 (12" RCP) INV. (W) = 500.94 (12" RCP)
C.B. TYPE 'C' T.F. = 504.36 (6" PVC) INV. (W) = 500.96 (12" RCP)
C.B. TYPE 'C' T.F. = 504.38 (6" PVC) INV. (W) = 500.98 (12" RCP)
C.B. TYPE 'C' T.F. = 504.38 (12" RCP) INV. (W) = 500.98

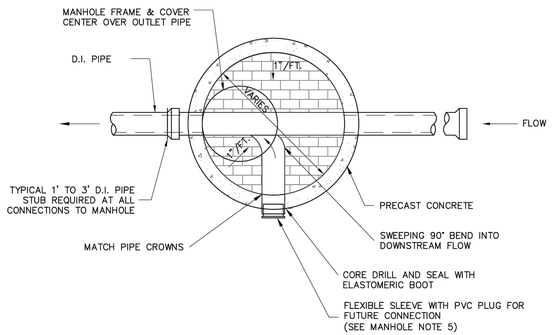

PLAN VIEW

NOTES:

1. BUILDING CONNECTIONS SHALL NOT BE CONNECTED DIRECTLY TO MANHOLE STRUCTURES
2. SEE DETAIL FOR NEW BUILDING CONNECTION ADJACENT TO EXISTING MANHOLE FOR NEW CONNECTIONS
3. MAKE CHANGES IN FLOW DIRECTION BY CIRCULAR CHANNEL CONSTRUCTION WITH MAXIMUM RADIUS POSSIBLE. NO DIRECT TEES SHALL BE ALLOWED

SEWER MAIN NEW CONNECTION TO MANHOLE PLAN VIEW AND SECTION

N.T.S

NOTES:

1. ALL PIPES SHALL BE CUT FLUSH WITH INSIDE WALL OF STRUCTURE.
2. MANHOLES SHALL BE PLACED ON 12" MINIMUM CRUSHED STONE BASE.
3. MORTAR IN LIFTING HOLES AFTER INSTALLING RUBBER PLUGS.
4. PRECAST MANHOLE SECTIONS SHALL RECEIVE A BITUMINOUS DAMP PROOFING PRIOR TO DELIVERY TO THE SITE.
5. PROVIDE WATERTIGHT PLUG FOR FLEXIBLE SLEEVE AS NOTED ON THE DRAWING OR AS DIRECTED BY THE WATERBURY WPC.
6. PIPE TO MANHOLE JOINTS SHALL BE SEALED WATERTIGHT BY USE OF PRE MOLDED ELASTOMERIC SEALED JOINTS CAST INTO CONCRETE MANHOLE BASE AND SHALL CONFORM TO ASTM C 443 AND ASTM C 923M.
7. ANNULAR SPACE BETWEEN PIPE AND MANHOLE CASTING SHALL BE FILLED WITH AVANTI AV–202 MULTIGROUT OR EQUAL.
8. MANHOLE FRAME AND COVERS SHALL BE OF THE TYPE INDICATED BELOW OR APPROVED EQUAL, UNLESS OTHERWISE SPECIFIED, OR AS OTHERWISE DIRECTED BY THE WATERBURY WPC.

LOCATION	TYPE	
GUTTERS LOW LYING WET UNPAVED AREAS	24" x 8" WATERBURY FRAME & COVER WITH #6 LOCKS AND SEAL TIGHT GASKETS	SEE FIGURES 18 & 18A
NORMALLY DRY UNPAVED AND PAVED AREAS	24" x 8" WATERBURY FRAME AND COVERS	SEE FIGURE 17

9. MANHOLE FRAME COVER BOLTS SHALL BE 1/2" STAINLESS STEEL.
10. MANHOLE STEPS SHALL BE STEEL REINFORCED POLYPROPYLENE OR ALUMINUM.
11. WHERE THE DIFFERENCE IN ELEVATION BETWEEN THE INCOMING SEWER AND THE MANHOLE INVERT IS LESS THAN 24", THE INVERTS SHALL BE CONNECTED WITH A UNIFORMLY SLOPING CHANNEL
12. IN UNPAVED AREAS, MANHOLE COVERS SHALL BE 12" ABOVE FINISH GRADE.
13. NEW OR EXISTING SEWER WORK REQUIRES A PERMIT FROM THE WATERBURY WATER POLLUTION CONTROL (WPC).
14. NEW MANHOLES SHALL BE VACUUM TESTED IN ACCORDANCE WITH THE SPECIFICATIONS.

MANHOLE NOTES

N.T.S

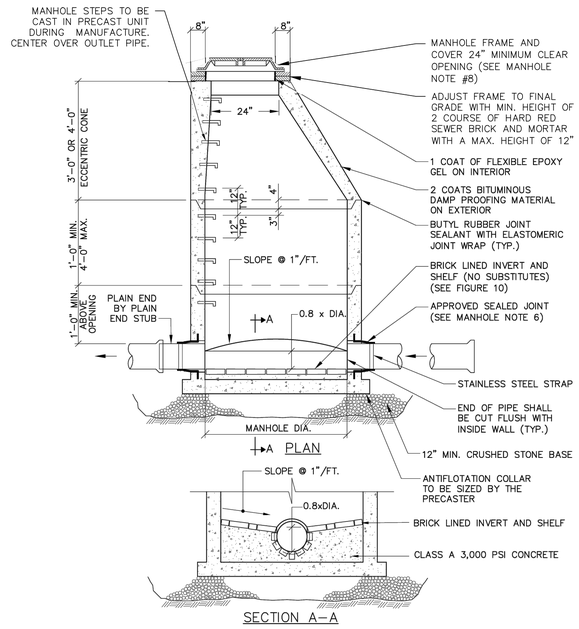

SECTION A–A

PRECAST MANHOLE

N.T.S

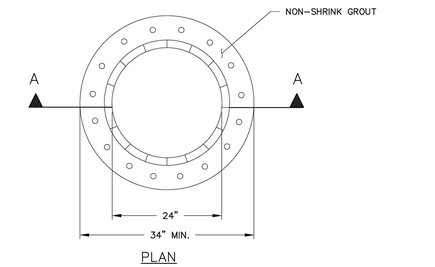

PLAN

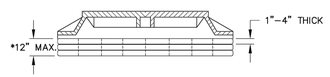

SECTION A–A

NOTES:

1. PRECAST CONCRETE MANHOLE RISERS OR CONCRETE BLOCKS TO RAISE FRAME AND COVER GREATER THAN 12 INCHES
2. USE ECCENTRIC GRADE RINGS IN AREAS WITH ROAD CROWN

MANHOLE ADJUSTABLE HDPE GRADE RINGS

N.T.S

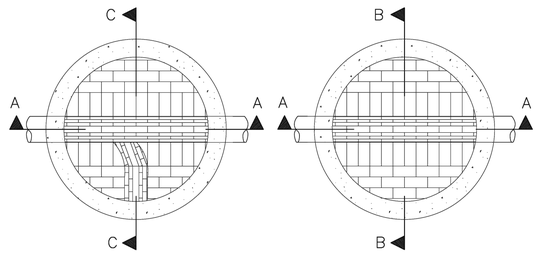

PLAN W/ SWEEP PLAN W/O SWEEP

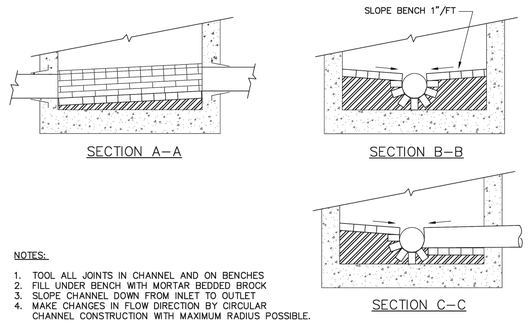

SECTION A–A SECTION B–B

SECTION C–C

NOTES:

1. TOOL ALL JOINTS IN CHANNEL AND ON BENCHES
2. FILL UNDER BENCH WITH MORTAR BEDDED BROCK
3. SLOPE CHANNEL DOWN FROM INLET TO OUTLET
4. MAKE CHANGES IN FLOW DIRECTION BY CIRCULAR CHANNEL CONSTRUCTION WITH MAXIMUM RADIUS POSSIBLE.

STANDARD MANHOLE BRICK INVERT

N.T.S

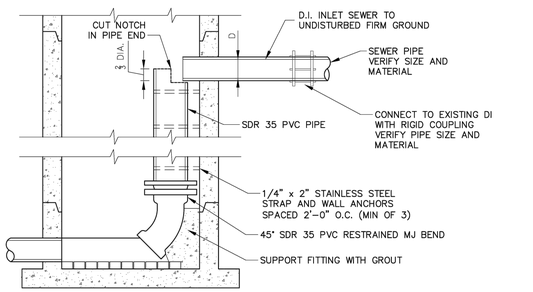

INVERT AT MAIN RUN DROPS

INLET PIPE TO DROP	DROP PIPE DRAIN TO	MANHOLE DIA.
8"	10"	5'
10"	12"	5'
12"	15"	5'
15"	21"	6'
18" OR MORE	CONTACT WPC	

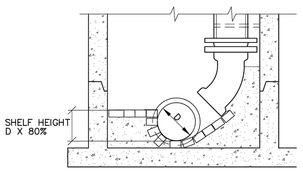

INVERT AT SIDE DROPS

NOTES:

1. INSIDE DROP INLETS SHALL BE PROVIDED FOR INLET PIPES MORE THAN 2 FEET ABOVE OUTLET PIPE CROWNS
2. DIMENSIONS AND CONSTRUCTION OF DROP MANHOLE TO BE SIMILAR TO TYPICAL MANHOLE EXCEPT AS SHOWN
3. ALL DROPS IN NEW MANHOLES SHALL BE APPROVED BY THE WATERBURY WPC
4. DIAMETER SHALL BE BASED ON THE DIAMETER OF THE DROP PIPE
5. PIPES SHALL NOT BE INSTALLED DIRECTLY ON MANHOLE SHELF
6. PAYMENT LIMITS FOR DROP INLET FROM ℄ OF INLET SEWER PIPE TO ℄ OF OUTLET PIPE

INSIDE DROP INLET

N.T.S

NO.	DATE	DSGN	DR	CHK	APVD	BY	APVD
		SG	SK	RM			XX

REVISION

© JACOBS 2023. ALL RIGHTS RESERVED.

120 SAINT JAMES AVENUE
5TH FLOOR
BOSTON, MA 02116

Jacobs

TRUMPET BROOK
SANITARY SEWER RELOCATION
CITY OF WATERBURY
WATER POLLUTION CONTROL FACILITY
210 MUNICIPAL ROAD
WATERBURY, CT

CONSTRUCTION DETAILS - 1

REUSE OF DOCUMENTS: THIS DOCUMENT, AND THE IDEAS AND DESIGNS INCORPORATED HEREIN, AS AN INSTRUMENT OF PROFESSIONAL SERVICE, IS THE PROPERTY OF JACOBS AND IS NOT TO BE USED, IN WHOLE OR IN PART, FOR ANY OTHER PROJECT WITHOUT THE WRITTEN AUTHORIZATION OF JACOBS.

NOT TO SCALE

VERIFY SCALE

BAR IS ONE INCH ON ORIGINAL DRAWING. 0 1"

DATE	04/24/2026
PROJ	D70880EN
DWG	C–008
SHEET	11 of 18

FILENAME: E2X91801_ATTB.DWG PLOT DATE:5/1/2026 PLOT TIME:6:48 PM

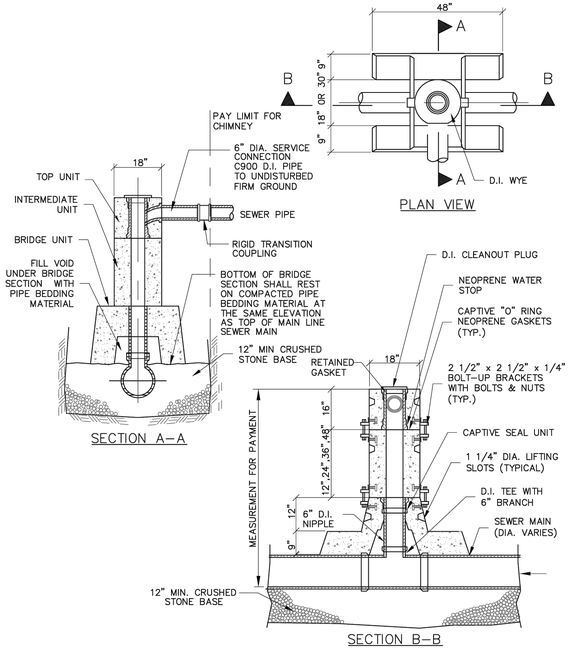

PRECAST SANITARY SEWER CHIMNEY
N.T.S

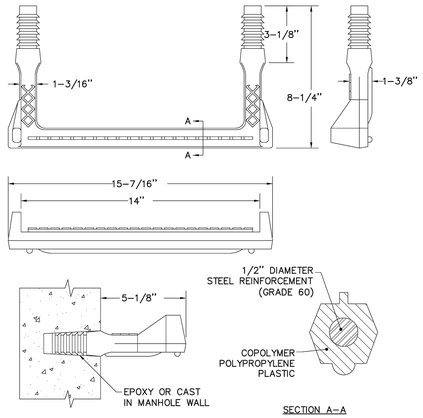

MANHOLE STEP
N.T.S

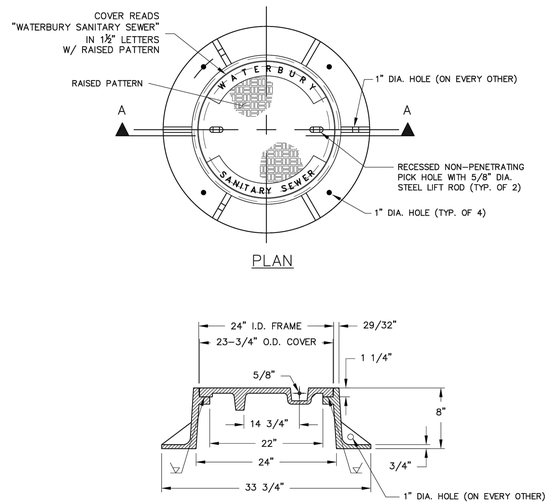

NOTES:

1. MATERIAL – GRAY CAST IRON ASTM A48–83, CLASS 35, AASHTO HS20–44 LOAD RATED.
2. BEARING SURFACES INDICATED WITH A ▽ SHALL BE MACHINED FOR UNIFORMITY.
3. CASTING SUPPLIED WITHOUT SURFACE COATING.
4. MANHOLE COVER WEIGHT SHALL BE 133 LB OR GREATER.

24" X 8" WATERBURY STANDARD FRAME AND COVER
N.T.S

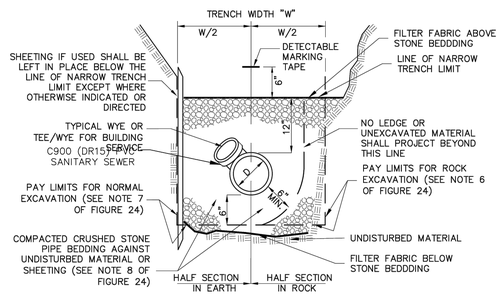

TYPICAL GRAVITY SEWER TRENCH
N.T.S

1. DEPTH OF SEWER SHALL BE AS SHOWN ON DRAWINGS.
2. SEWER TRENCHES MAY BE EXCAVATED WIDER THAN TRENCH WIDTH "W" ABOVE THE "LINE OF NARROW TRENCH LIMIT" AT THE CONTRACTORS EXPENSE.
3. BELOW THE "LINE OF NARROW TRENCH LIMIT" THE TRENCH SHALL NOT BE EXCAVATED BEYOND THE TRENCH WIDTH "W".
4. THE WATERBURY WPC MAY ORDER SHEETING IF EXCAVATION AND BACKFILL BELOW THE NORMAL DEPTH IS REQUIRED.
5. IF USED, SHEETING SHALL BE LEFT IN PLACE BELOW A LINE 1'–0" ABOVE THE TOP OF THE SEWER PIPE, UNLESS OTHERWISE INDICATED OR DIRECTED BY THE WATERBURY WPC.
6. REMOVE ALL ROCK WITHIN 3'–0" HORIZONTALLY OF THE ENDS OF SERVICE CONNECTIONS, BRANCHES, AND STUBS; AND DOWN TO A HORIZONTAL PLANE 6" BELOW THE BOTTOMS OF SUCH ITEMS.
7. THE FOLLOWING TRENCH WIDTH AND PAYMENT LIMIT SHALL APPLY:

DIAMETER OF PIPE "D"	TRENCH WIDTH "W"	PAYMENT LIMIT
12" AND SMALLER	4'–0"	4'–0"
12" THRU 15"	7'–0"	7'–0"
18" THRU 24"	7'–6"	7'–6"
MORE THAN 24"	8'–0"	8'–0"

8. REPLACE PIPE BEDDING AND TRENCH BACKFILL WITH 2' LONG IMPERVIOUS DAM WHERE CALLED FOR ON THE DRAWINGS OR AS DIRECTED BY THE WATERBURY WPC. UNDER DRAIN SHALL BE INSTALLED WHERE CALLED FOR ON DRAWINGS OR AS DIRECTED BY THE WATERBURY WPC.
9. WHERE CONCRETE ENCASEMENT IS CALLED FOR BY THE PLANS, OR WHEN DIRECTED BY THE WATERBURY WPC, REPLACE BEDDING AND BACKFILL BELOW THE "LINE OF NARROW TRENCH LIMIT" WITH CLASS "A" 3000 PSI CONCRETE.
10. DETECTABLE SEWER MARKING TAPE SHALL BE INSTALLED A MINIMUM OF 18" ABOVE THE SANITARY SEWER, FORCE MAIN, AND SERVICE CONNECTION PIPE.
11. SANITARY SEWER PIPE AND SERVICE CONNECTION PIPE SHALL HAVE FILTER FABRIC INSTALLED BELOW AND ABOVE CRUSHED STONE PIPE BEDDING.

SANITARY SEWER PIPE OR FORCE MAIN TRENCH NOTES
N.T.S

NO.	DATE	DSGN	DR	CHK	APVD	BY	APVD
				SK	RM		XX

REVISION

© JACOBS 2023. ALL RIGHTS RESERVED.

REUSE OF DOCUMENTS: THIS DOCUMENT, AND THE IDEAS AND DESIGNS INCORPORATED HEREIN, AS AN INSTRUMENT OF PROFESSIONAL SERVICE, IS THE PROPERTY OF JACOBS AND IS NOT TO BE USED, IN WHOLE OR IN PART, FOR ANY OTHER PROJECT WITHOUT THE WRITTEN AUTHORIZATION OF JACOBS.

120 SAINT JAMES AVENUE
5TH FLOOR
BOSTON, MA 02116

Jacobs

TRUMPET BROOK
SANITARY SEWER RELOCATION
CITY OF WATERBURY
WATER POLLUTION CONTROL FACILITY
210 MUNICIPAL ROAD
WATERBURY, CT

CONSTRUCTION DETAILS - 2

NOT TO SCALE

VERIFY SCALE

BAR IS ONE INCH ON ORIGINAL DRAWING.
0 1"

DATE	04/24/2026
PROJ	D70880EN
DWG	C–009
SHEET	12 of 18

FILENAME: E2X91801_ATTB.DWG PLOT DATE:5/1/2026 PLOT TIME:6:49 PM

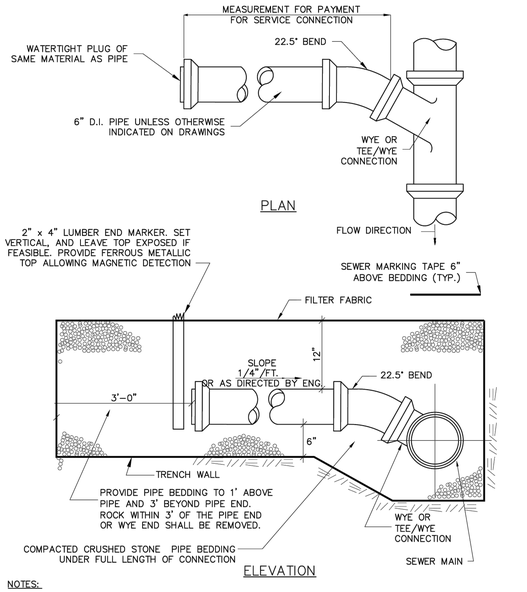

NOTES:

1. NO LEDGE OR UNEXCAVATED MATERIAL SHALL PROJECT WITHIN 6" OF THE PIPE IN ANY DIRECTION
2. EXACT LOCATION AND ELEVATION OF SERVICE CONNECTIONS TO BE DETERMINED AND SET IN THE FIELD DURING CONSTRUCTION
3. EXACT LOCATION OF WYES/TEES SHALL BE SET IN THE FIELD AS DIRECTED BY WATERBURY WPC DURING CONSTRUCTION

TYPICAL GRAVITY SEWER CONNECTIONS
N.T.S

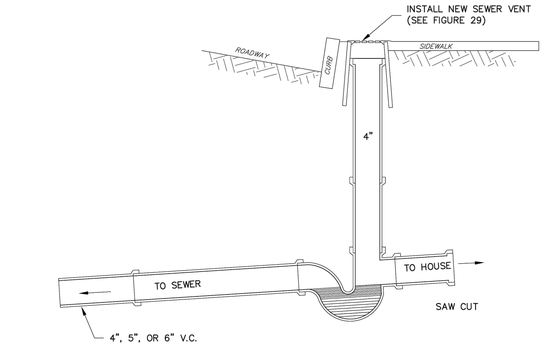

EXISTING FRESH AIR INLET & TRAP FOR BUILDING SEWER
N.T.S.

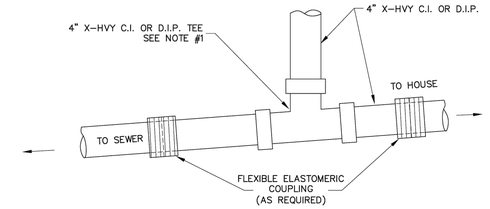

NOTES:

1. SEWER VENT REMOVAL ONLY ALLOWABLE IF BUILDING HAS SUITABLE VENT STACK INSTALLED
2. OTHERWISE, SEE REPAIR SANITARY SEWER VENT DETAIL

RECONNECT SANITARY SEWER LATERAL
N.T.S

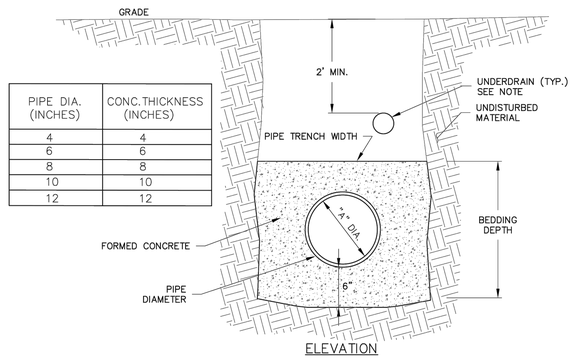

PIPE DIA. (INCHES)	CONC. THICKNESS (INCHES)
4	4
6	6
8	8
10	10
12	12

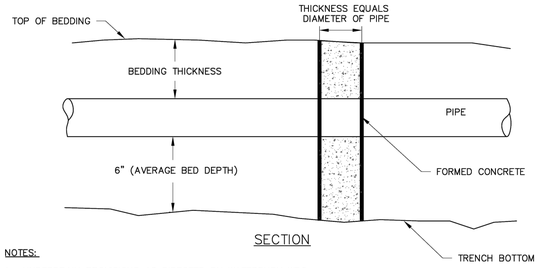

NOTES:

1. UNDERDRAIN PROVISIONS AS DIRECTED BY WATERBURY WPC

IMPERVIOUS CONCRETE TRENCH DAM
N.T.S

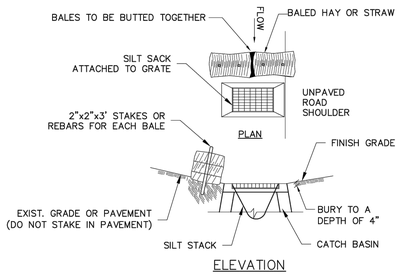

CATCH BASIN PROTECTION
N.T.S.

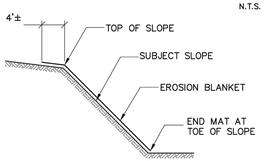

NOTE:

1. BLANKETS SHALL BE STAPLED TO SLOPE, REFER TO MANUFACTURERS INSTALLATION INSTRUCTIONS FOR DETAILS OF STAPLING PATTERN.

EROSION CONTROL BLANKET
N.T.S.

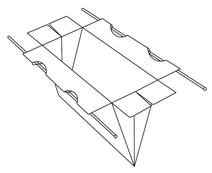

NOTES:

1. SIZED TO FIT ANY SIZE OR SHAPE CATCH BASIN.
2. ALL SEAMS DOUBLE STITCHED.
3. PERMEABILITY:
   REGULAR FLOW SILT SACK – 40 gal./min./sq. ft.
   HI – FLOW SILT SACK – 200 gal./min./sq. ft.

SILT SACK DETAIL
N.T.S

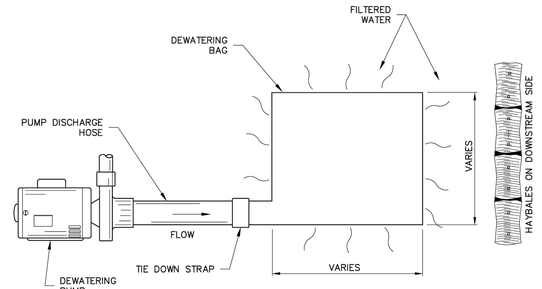

DEWATERING BAG
N.T.S

NO.	DATE	DSGN	DR	CHK	APVD	BY	APVD

NOTES:

1. ALL MATERIALS SHALL CONFORM TO THE LATEST EDITION OF THE STATE OF CONNECTICUT STANDARD SPECIFICATIONS FOR ROADS, BRIDGES AND INCIDENTAL CONSTRUCTION.
2. ALL TRENCHES WITHIN THE CITY RIGHT OF WAY AT A MINIMUM SHALL BE FILLED AND PATCHED WITH 2" (MIN). OF TEMPORARY PAVEMENT AT THE END OF EACH DAY UNLESS OTHERWISE DIRECTED BY THE CITY ENGINEER.
3. PAVEMENT RESTORATION SHALL BE COMPLETED AT THE END OF EVERY DAY OF WORK ON ARTERIAL AND COLLECTOR ROADS, UNLESS OTHERWISE APPROVED IN WRITING BY THE CITY ENGINEER AT THE TIME THE PERMIT IS ISSUED.
4. PAVEMENT RESTORATION SHALL BE COMPLETED WITHIN TWENTY-FOUR HOURS OF THE PREVIOUS DAYS EXCAVATION ON LOCAL ROADS.
5. ALL TEMPORARY PATCHES SHALL BE REPLACED WITH PERMANENT PAVEMENT RESTORATION WITHIN 60 DAYS OF THE PLACEMENT OF THE TEMPORARY PATCH UNLESS APPROVED BY THE CITY ENGINEER.
6. THE PERMITEE SHALL REPAIR ALL DEFICIENT PAVEMENT RESTOR-ATIONS WITHIN 48 HOURS OF RECEIVING VERBAL NOTICE FROM THE CITY ENGINEER.
7. FAILURE OF THE PERMITEE TO RESPOND WITHIN 48 HOURS TO THE DEPARTMENT OF ENGINEERING ORDERS WILL, AT THE DISCRETION OF THE CITY ENGINEER, RESULT IN THE CALLING OF THE PERMITEE'S BOND.
8. WHERE EXISTING PAVEMENT IS THICKER THEN DETAIL SHOWN, THE CONTRACTOR TO MATCH THE PAVEMENT THICKNESS.

LOCAL ROADS PAVEMENT RESTORATION DETAIL

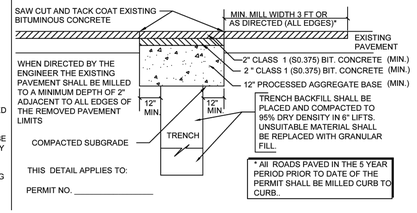

LOCAL ROADS
PAVEMENT RESTORATION DETAIL
N.T.S

NOTES:

1. ALL MATERIALS SHALL CONFORM TO THE LATEST EDITION OF THE STATE OF CONNECTICUT STANDARD SPECIFICATIONS FOR ROADS, BRIDGES AND INCIDENTAL CONSTRUCTION.
2. ALL TRENCHES WITHIN THE CITY RIGHT OF WAY AT A MINIMUM SHALL BE FILLED AND PATCHED WITH 2" (MIN). OF TEMPORARY PAVEMENT AT THE END OF EACH DAY UNLESS OTHERWISE DIRECTED BY THE CITY ENGINEER.
3. PAVEMENT RESTORATION SHALL BE COMPLETED AT THE END OF EVERY DAY OF WORK ON ARTERIAL AND COLLECTOR ROADS, UNLESS OTHERWISE APPROVED IN WRITING BY THE CITY ENGINEER AT THE TIME THE PERMIT IS ISSUED.
4. PAVEMENT RESTORATION SHALL BE COMPLETED WITHIN TWENTY-FOUR HOURS OF THE PREVIOUS DAYS EXCAVATION ON LOCAL ROADS.
5. ALL TEMPORARY PATCHES SHALL BE REPLACED WITH PERMANENT PAVEMENT RESTORATION WITHIN 60 DAYS OF THE PLACEMENT OF THE TEMPORARY PATCH UNLESS APPROVED BY THE CITY ENGINEER.
6. THE PERMITEE SHALL REPAIR ALL DEFICIENT PAVEMENT RESTOR-ATIONS WITHIN 48 HOURS OF RECEIVING VERBAL NOTICE FROM THE CITY ENGINEER.
7. FAILURE OF THE PERMITEE TO RESPOND WITHIN 48 HOURS TO THE DEPARTMENT OF ENGINEERING ORDERS WILL, AT THE DISCRETION OF THE CITY ENGINEER, RESULT IN THE CALLING OF THE PERMITEE'S BOND.
8. WHERE EXISTING PAVEMENT IS THICKER THEN DETAIL SHOWN, THE CONTRACTOR TO MATCH THE PAVEMENT THICKNESS.

ARTERIAL ROADS PAVEMENT RESTORATION DETAIL

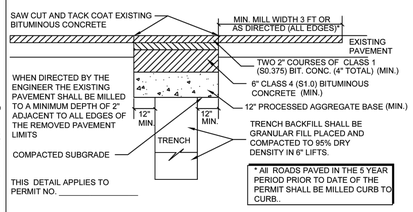

ARTERIAL ROADS
PAVEMENT RESTORATION DETAIL
N.T.S

GENERAL NOTE:

1. SEE CTDOT SPECIFICATION "STEEL PLATE USE WITHIN HIGHWAY RIGHT OF WAY".

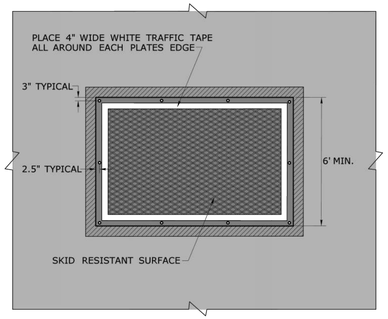

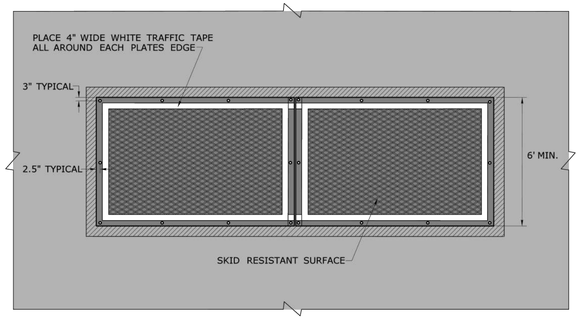

TEMPORARY STEEL PLATE

TEMPORARY STEEL PLATES BUTTED TOGETHER

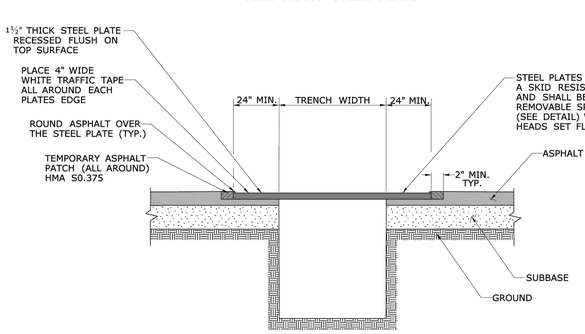

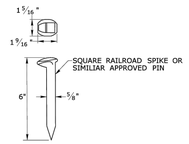

RECESSED TEMPORARY STEEL PLATE OVER TRENCH

6" LONG x 5/8" SQUARE RAILROAD SPIKE OR SIMILIAR APPROVED PIN

RAMPED TEMPORARY STEEL PLATE OVER TRENCH

TEMPORARY STEEL PLATE OVER TRENCH DETAIL
N.T.S

NO.	DATE	REVISION	DR	CHK	APVD	BY	APVD
DSGN			SG	SK	RM		XX

© JACOBS 2023. ALL RIGHTS RESERVED.

REUSE OF DOCUMENTS: THIS DOCUMENT, AND THE IDEAS AND DESIGNS INCORPORATED HEREIN, AS AN INSTRUMENT OF PROFESSIONAL SERVICE, IS THE PROPERTY OF JACOBS AND IS NOT TO BE USED, IN WHOLE OR IN PART, FOR ANY OTHER PROJECT WITHOUT THE WRITTEN AUTHORIZATION OF JACOBS.

120 SAINT JAMES AVENUE
5TH FLOOR
BOSTON, MA 02116

Jacobs

TRUMPET BROOK
SANITARY SEWER RELOCATION
CITY OF WATERBURY
WATER POLLUTION CONTROL FACILITY
210 MUNICIPAL ROAD
WATERBURY, CT

CONSTRUCTION DETAILS - 4

NOT TO SCALE
VERIFY SCALE
BAR IS ONE INCH ON ORIGINAL DRAWING.
0 1"

DATE	04/24/2026
PROJ	D70880EN
DWG	C–011
SHEET	14 of 18

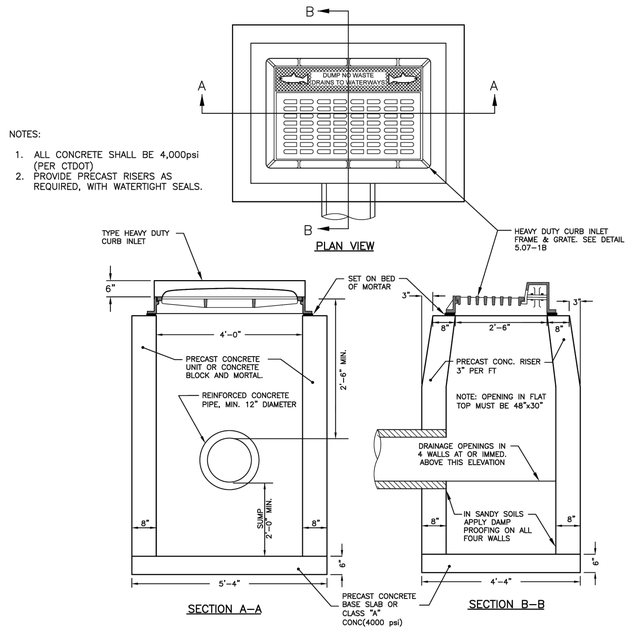

NOTES:

1. ALL CONCRETE SHALL BE 4,000psi (PER CTDOT)
2. PROVIDE PRECAST RISERS AS REQUIRED, WITH WATERTIGHT SEALS.

WATERBURY TYPE 'C' CATCH BASIN
N.T.S

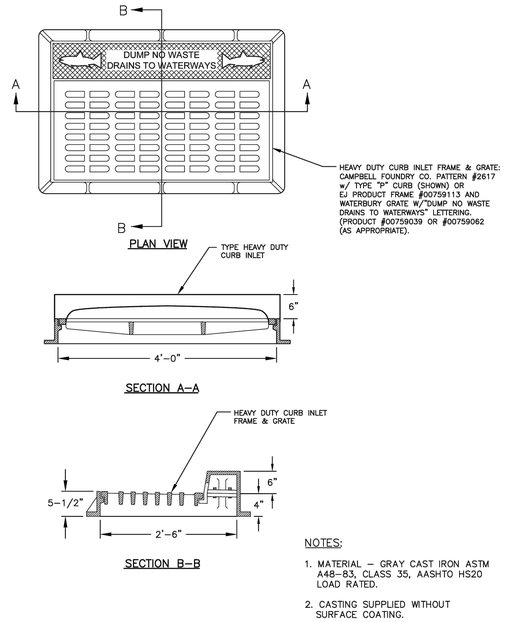

NOTES:

1. MATERIAL – GRAY CAST IRON ASTM A48-83, CLASS 35, AASHTO HS20 LOAD RATED.
2. CASTING SUPPLIED WITHOUT SURFACE COATING.

WATERBURY CATCH BASIN TYPE 'C' FRAME AND GRATE
N.T.S

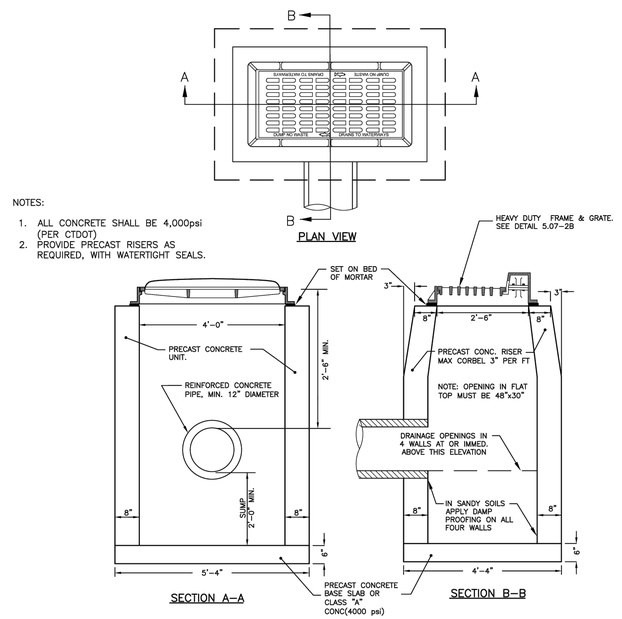

WATERBURY TYPE 'C-L' CATCH BASIN
N.T.S

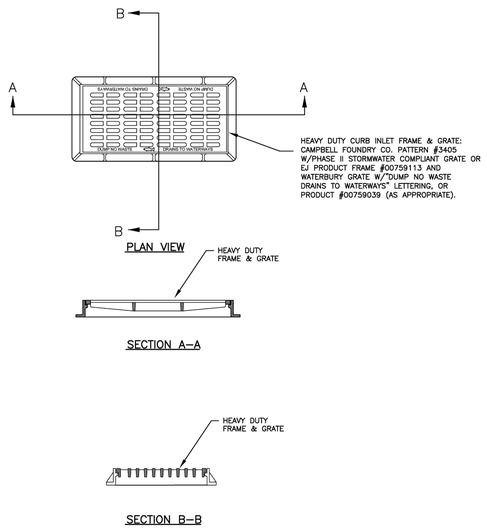

WATERBURY CATCH BASIN TYPE 'C-L' FRAME AND GRATE
N.T.S

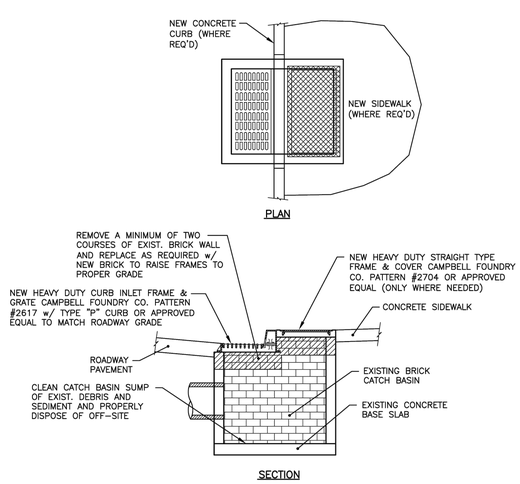

RECONSTRUCT CATCH BASIN
N.T.S

NO.	DATE	DSGN	DR	CHK	APVD
			SG	SK	RM
					BY
					APVD
	REVISION				XX

© JACOBS 2023. ALL RIGHTS RESERVED.
THIS DOCUMENT, AND THE IDEAS AND DESIGNS INCORPORATED HEREIN, AS AN INSTRUMENT OF PROFESSIONAL SERVICE, IS THE PROPERTY OF JACOBS AND IS NOT TO BE USED, IN WHOLE OR IN PART, FOR ANY OTHER PROJECT WITHOUT THE WRITTEN AUTHORIZATION OF JACOBS.
REUSE OF DOCUMENTS:

120 SAINT JAMES AVENUE
5TH FLOOR
BOSTON, MA 02116

TRUMPET BROOK
SANITARY SEWER RELOCATION
CITY OF WATERBURY
WATER POLLUTION CONTROL FACILITY
210 MUNICIPAL ROAD
WATERBURY, CT

Jacobs

CONSTRUCTION DETAILS - 5

NOT TO SCALE
VERIFY SCALE
BAR IS ONE INCH ON ORIGINAL DRAWING.
0 1"

DATE	04/24/2026
PROJ	D70880EN
DWG	C-012
SHEET	15 of 18

FILENAME: E2X91801_ATTB.DWG PLOT DATE:5/1/2026 PLOT TIME:6:50 PM

	MIN. MANHOLE INSIDE DIAMETER				
	4 FOOT MANHOLE 5" WALL	5 FOOT MANHOLE 6" WALL	6 FOOT MANHOLE 7" WALL	8FOOT MANHOLE 9" WALL	10 FOOT MANHOLE 11" WALL
MAX.PIPE O.D. STRAIGHT THRU TO 45° DEFLECTION	UP TO 30" O.D 18" R.C. PIPE	UP TO 44" O.D 36" R.C. PIPE	UP TO 51" O.D 42" R.C. PIPE	UP TO 72" O.D 60 R.C. PIPE	UP TO 86" O.D 72 R.C. PIPE
MAX.PIPE O.D. 45° DEFLECTION 90° DEFLECTION	UP TO 23" O.D 18" R.C. PIPE	UP TO 33.5" O.D 27" R.C. PIPE	UP TO 37 O.D 30" R.C. PIPE	UP TO 51" O.D 42" R.C. PIPE	UP TO 70" O.D 60" R.C. PIPE

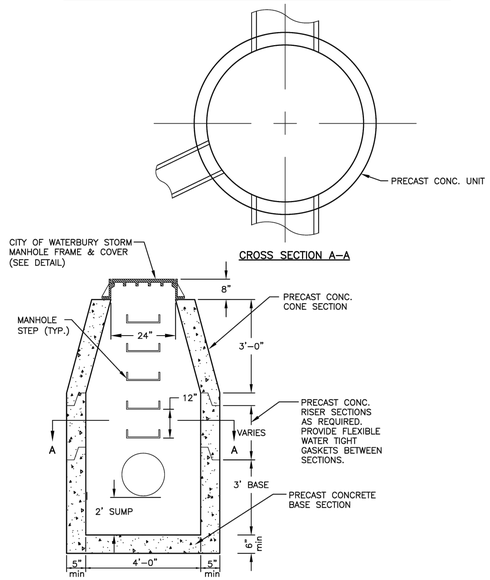

STORM MANHOLE WITH PRECAST BASE
N.T.S

	MIN. MANHOLE INSIDE DIAMETER				
	4 FOOT MANHOLE 5" WALL	5 FOOT MANHOLE 6" WALL	6 FOOT MANHOLE 7" WALL	8FOOT MANHOLE 9" WALL	10 FOOT MANHOLE 11" WALL
MAX.PIPE O.D. STRAIGHT THRU TO 45° DEFLECTION	UP TO 30" O.D 18" R.C. PIPE	UP TO 44" O.D 36" R.C. PIPE	UP TO 51" O.D 42" R.C. PIPE	UP TO 72" O.D 60 R.C. PIPE	UP TO 86" O.D 72 R.C. PIPE
MAX.PIPE O.D. 45° DEFLECTION 90° DEFLECTION	UP TO 23" O.D 18" R.C. PIPE	UP TO 33.5" O.D 27" R.C. PIPE	UP TO 37 O.D 30" R.C. PIPE	UP TO 51" O.D 42" R.C. PIPE	UP TO 70" O.D 60" R.C. PIPE

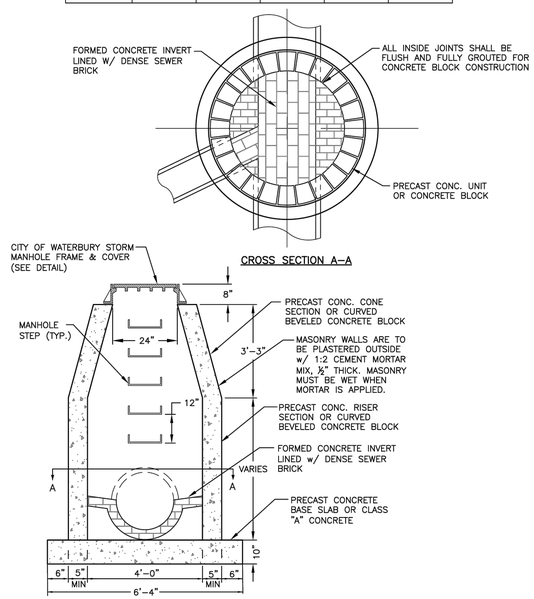

STORM MANHOLE WITH PRECAST OR CLASS "A" CONCRETE BASE
N.T.S

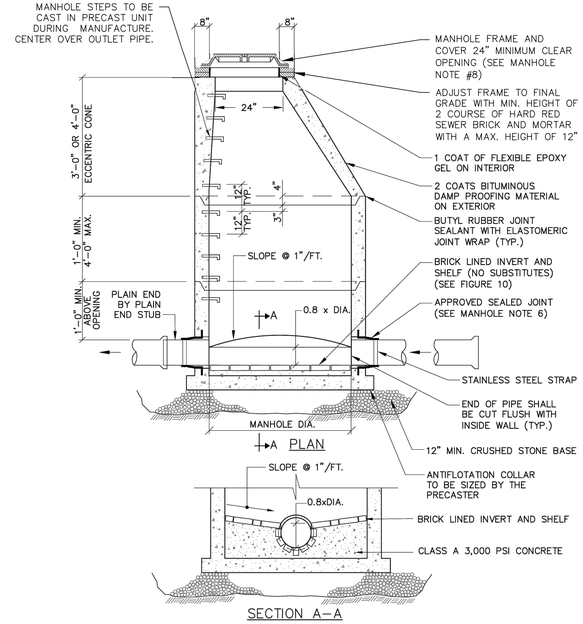

PRECAST MANHOLE
N.T.S

ALL MATERIALS SHALL CONFORM TO CONNDOT FORM 818, SECTION M.08.02

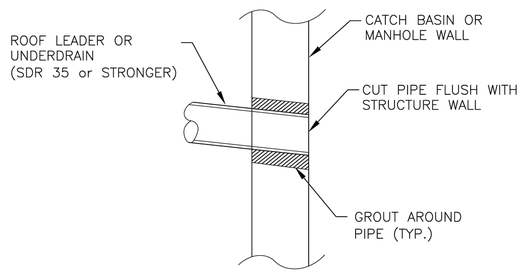

PIPE CONNECTION TO EXISTING STORM STRUCTURE
N.T.S

NOTE:
1. ALL WORK AND MATERIALS SHALL CONFORM TO THE LATEST EDITION OF THE CONNDOT STANDARD SPECIFICATIONS FOR ROADS, BRIDGES AND INCIDENTAL CONSTRUCTION.

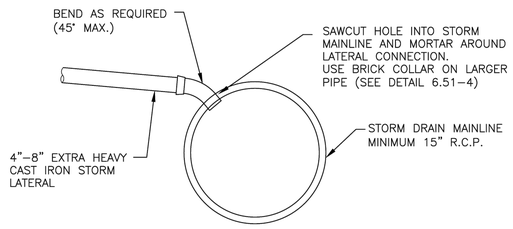

STORM LATERAL CONNECTION
N.T.S

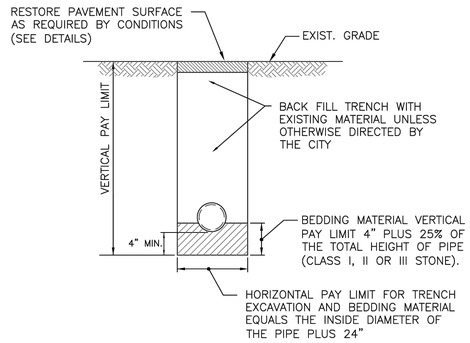

TRENCH SECTION 30" DIA. PIPE OR LESS
N.T.S

NO.	DATE	DR	SG	REVISION	CHK	SK	APVD	RM	APVD	BY	APVD	XX
DSGN												

© JACOBS 2023. ALL RIGHTS RESERVED.
REUSE OF DOCUMENTS: THIS DOCUMENT, AND THE IDEAS AND DESIGNS INCORPORATED HEREIN, AS AN INSTRUMENT OF PROFESSIONAL SERVICE, IS THE PROPERTY OF JACOBS AND IS NOT TO BE USED, IN WHOLE OR IN PART, FOR ANY OTHER PROJECT WITHOUT THE WRITTEN AUTHORIZATION OF JACOBS.

120 SAINT JAMES AVENUE
5TH FLOOR
BOSTON, MA 02116

Jacobs

TRUMPET BROOK
SANITARY SEWER RELOCATION
CITY OF WATERBURY
WATER POLLUTION CONTROL FACILITY
210 MUNICIPAL ROAD
WATERBURY, CT

CONSTRUCTION DETAILS - 6

NOT TO SCALE
VERIFY SCALE
BAR IS ONE INCH ON ORIGINAL DRAWING.
0 1"

DATE	04/24/2026
PROJ	D70880EN
DWG	C–013
SHEET	16 of 18

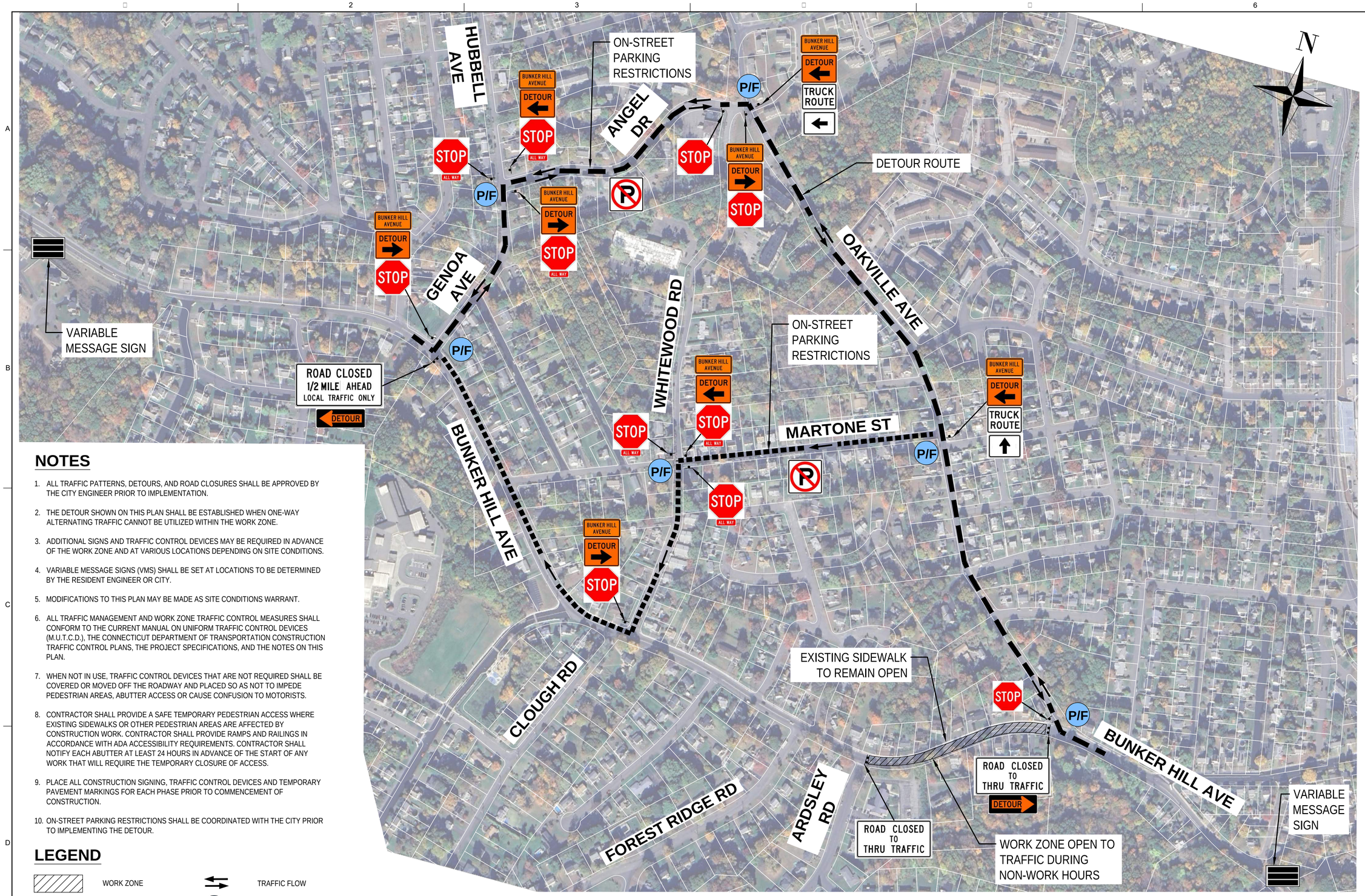

NOTES

1. ALL TRAFFIC PATTERNS, DETOURS, AND ROAD CLOSURES SHALL BE APPROVED BY THE CITY ENGINEER PRIOR TO IMPLEMENTATION.
2. THE DETOUR SHOWN ON THIS PLAN SHALL BE ESTABLISHED WHEN ONE-WAY ALTERNATING TRAFFIC CANNOT BE UTILIZED WITHIN THE WORK ZONE.
3. ADDITIONAL SIGNS AND TRAFFIC CONTROL DEVICES MAY BE REQUIRED IN ADVANCE OF THE WORK ZONE AND AT VARIOUS LOCATIONS DEPENDING ON SITE CONDITIONS.
4. VARIABLE MESSAGE SIGNS (VMS) SHALL BE SET AT LOCATIONS TO BE DETERMINED BY THE RESIDENT ENGINEER OR CITY.
5. MODIFICATIONS TO THIS PLAN MAY BE MADE AS SITE CONDITIONS WARRANT.
6. ALL TRAFFIC MANAGEMENT AND WORK ZONE TRAFFIC CONTROL MEASURES SHALL CONFORM TO THE CURRENT MANUAL ON UNIFORM TRAFFIC CONTROL DEVICES (M.U.T.C.D.), THE CONNECTICUT DEPARTMENT OF TRANSPORTATION CONSTRUCTION TRAFFIC CONTROL PLANS, THE PROJECT SPECIFICATIONS, AND THE NOTES ON THIS PLAN.
7. WHEN NOT IN USE, TRAFFIC CONTROL DEVICES THAT ARE NOT REQUIRED SHALL BE COVERED OR MOVED OFF THE ROADWAY AND PLACED SO AS NOT TO IMPEDE PEDESTRIAN AREAS, ABUTTER ACCESS OR CAUSE CONFUSION TO MOTORISTS.
8. CONTRACTOR SHALL PROVIDE A SAFE TEMPORARY PEDESTRIAN ACCESS WHERE EXISTING SIDEWALKS OR OTHER PEDESTRIAN AREAS ARE AFFECTED BY CONSTRUCTION WORK. CONTRACTOR SHALL PROVIDE RAMPS AND RAILINGS IN ACCORDANCE WITH ADA ACCESSIBILITY REQUIREMENTS. CONTRACTOR SHALL NOTIFY EACH ABUTTER AT LEAST 24 HOURS IN ADVANCE OF THE START OF ANY WORK THAT WILL REQUIRE THE TEMPORARY CLOSURE OF ACCESS.
9. PLACE ALL CONSTRUCTION SIGNING, TRAFFIC CONTROL DEVICES AND TEMPORARY PAVEMENT MARKINGS FOR EACH PHASE PRIOR TO COMMENCEMENT OF CONSTRUCTION.
10. ON-STREET PARKING RESTRICTIONS SHALL BE COORDINATED WITH THE CITY PRIOR TO IMPLEMENTING THE DETOUR.

LEGEND

- WORK ZONE
- DETOUR ROUTE FOR ALL VEHICLES
- DETOUR ROUTE FOR WB PASSENGER VEHICLES
- TRAFFIC FLOW
- POLICE DETAIL OR CERTIFIED FLAGGER
- VARIABLE MESSAGE SIGN (VMS)

0 200 400 Feet

HORIZONTAL SCALE: 1"=200'
ORIGINAL DRAWING SIZE IS 22" X 34"

NO.	DATE	REVISION	DR	CHK	APVD
DS:			JB	JB	RM

BY APVD
XX

© JACOBS 2023. ALL RIGHTS RESERVED.
THIS DOCUMENT, AND THE IDEAS AND DESIGNS INCORPORATED HEREIN, AS AN INSTRUMENT OF PROFESSIONAL SERVICE, IS THE PROPERTY OF JACOBS AND SHALL NOT BE USED, IN WHOLE OR IN PART, FOR ANY OTHER PROJECT WITHOUT THE WRITTEN AUTHORIZATION OF JACOBS.

Jacobs
320 SAINT JAMES AVENUE
10TH FLOOR
BOSTON, MA 02116

TRUMPET BROOK
SEWER RELOCATION
CITY OF WATERBURY
WATER PROTECTION CONTROL FACILITY
2100 MUNICIPAL ROAD
WATERBURY, CT

BUNKER HILL AVENUE

DETOUR PLAN
BUNKER HILL AVENUE

VERIFY SCALE
BAR IS ONE INCH ON ORIGINAL DRAWING.
0

DATE 2/2026
PROJ D70880E
DWG C-001
SHEET 8 of 8

FILENAME D70880EN
PLOT DATE 2/27/2026
PLOT TIME AM



NOTES

1. ALL TRAFFIC PATTERNS, DETOURS, AND ROAD CLOSURES SHALL BE APPROVED BY THE CITY ENGINEER PRIOR TO IMPLEMENTATION.
2. THE DETOUR SHOWN ON THIS PLAN SHALL BE ESTABLISHED WHEN ONE-WAY ALTERNATING TRAFFIC CANNOT BE UTILIZED WITHIN THE WORK ZONE.
3. ADDITIONAL SIGNS AND TRAFFIC CONTROL DEVICES MAY BE REQUIRED IN ADVANCE OF THE WORK ZONE AND AT VARIOUS LOCATIONS DEPENDING ON SITE CONDITIONS.
4. VARIABLE MESSAGE SIGNS (VMS) SHALL BE SET AT LOCATIONS TO BE DETERMINED BY THE RESIDENT ENGINEER OR CITY.
5. MODIFICATIONS TO THIS PLAN MAY BE MADE AS SITE CONDITIONS WARRANT.
6. ALL TRAFFIC MANAGEMENT AND WORK ZONE TRAFFIC CONTROL MEASURES SHALL CONFORM TO THE CURRENT MANUAL ON UNIFORM TRAFFIC CONTROL DEVICES (M.U.T.C.D.), THE CONNECTICUT DEPARTMENT OF TRANSPORTATION CONSTRUCTION TRAFFIC CONTROL PLANS, THE PROJECT SPECIFICATIONS, AND THE NOTES ON THIS PLAN.
7. WHEN NOT IN USE, TRAFFIC CONTROL DEVICES THAT ARE NOT REQUIRED SHALL BE COVERED OR MOVED OFF THE ROADWAY AND PLACED SO AS NOT TO IMPEDE PEDESTRIAN AREAS, ABUTTER ACCESS OR CAUSE CONFUSION TO MOTORISTS.
8. CONTRACTOR SHALL PROVIDE A SAFE TEMPORARY PEDESTRIAN ACCESS WHERE EXISTING SIDEWALKS OR OTHER PEDESTRIAN AREAS ARE AFFECTED BY CONSTRUCTION WORK. CONTRACTOR SHALL PROVIDE RAMPS AND RAILINGS IN ACCORDANCE WITH ADA ACCESSIBILITY REQUIREMENTS. CONTRACTOR SHALL NOTIFY EACH ABUTTER AT LEAST 24 HOURS IN ADVANCE OF THE START OF ANY WORK THAT WILL REQUIRE THE TEMPORARY CLOSURE OF ACCESS.
9. PLACE ALL CONSTRUCTION SIGNING, TRAFFIC CONTROL DEVICES AND TEMPORARY PAVEMENT MARKINGS FOR EACH PHASE PRIOR TO COMMENCEMENT OF CONSTRUCTION.

LEGEND

- WORK ZONE
- DETOUR ROUTE FOR ALL VEHICLES
- TRAFFIC FLOW
- VARIABLE MESSAGE SIGN (VMS)

0 200 00 Feet

HORIZONTAL SCALE: 1"=200'
ORIGINAL DRAWING SIZE IS 22" X 34"

NO.	DATE	REVISIO	DR	CHK	APVD	BY	APVD
DS:			JB	JB	RM		XX

© ACOBS 2023. A RI HTS RESERVED.
SI ST CORPORATED HERE AS A T STR ME T OF PROFESSIO A SERVICE IS THE PROPERTY OF ACOBS A D IS OT TO BE SED, WHO E OR PART, FOR A Y OTHER PRO ECT WITHO T THE WRITTE A THORI ATIO OF ACOBS.
RE SE OF DOC ME TS THIS DOC ME T, A D THE IDEAS A D DESI S I CORPORATED HERE, AS A T STR ME T OF PROFESSIO A SERVICE, IS THE PROPERTY OF ACOBS A D IS OT TO BE SED, WHO E OR PART, FOR A Y OTHER PRO ECT WITHO T THE WRITTE A THORI ATIO OF ACOBS.

20 SAI T AMES AVE E
TH F OOR
BOSTO MA 02 6

Jacobs

TR MPET BROOK
SEWER RE OCATIO
CITY OF WATERB RY
WATER PO TIO CO TRO FACILITY
2 0 M ICIPA ROAD
WATERB RY, CT

BUNKER HILL AVENUE
DETO R P A
ARDS EY ROAD

" 200
VERIFY SCA E
BAR IS O E I CH O
ORI A DRAWI .
0

DATE /2026
PRO D70880E
DW C-0
SHEET 7 of 8

FI E AME D70880EN
P OT DATE 2/27/2026
P OT TIME AM

GENERAL CONDITIONS

INDEX TO GENERAL CONDITIONS

1. PLANS AND SPECIFICATIONS AT THE SITE.....GC-1
2. CONSTRUCTION PROGRESS SCHEDULE GC-1
3. ESTIMATED QUANTITIES GC-2
4. SCHEDULE OF VALUES; APPLICATION FOR PAYMENT.....GC-2
5. PARTIAL PAYMENTS GC-2
6. INSPECTION AND TESTS.....GC-3
7. UTILITIES.....GC-3
8. SEDIMENTATION AND EROSION CONTROL.....GC-3
9. PROTECTION OF ENVIRONMENTAL RESOURCES GC-4
10. ENVIRONMENTAL PROTECTION PLAN GC-5
11. TEMPORARY UTILITIES.....GC-5
12. ABBREVIATIONS GC-5
13. SUBSURFACE EXPLORATION.....GC-7
14. CONTRACT AND CONTRACT DOCUMENTS GC-7
15. SHOP DRAWINGS, CATALOG CUTS AND SAMPLES GC-7
16. CONTRACTOR'S TITLE TO MATERIALS..... .GC-8
17. “OR EQUAL" CLAUSES GC-8
18. REPRESENTATIONS OF THE CONTRACTOR GC-8
19. PROTECTION OF WORK AND PROPERTY (EMERGENCY).....GC-8
20. WEATHER CONDITIONS.....GC-9
21. SUBLETTING.....GC-9
22. SUBSTITUTE BOND GC-9
23. RIGHT TO WITHHOLD PAYMENTS..... GC-10
24. PAYMENTS BY CONTRACTOR GC-10
25. NOTICE OF WARNING GC-10
26. PROGRESS MEETINGS. GC-10
27. REGULATIONS AND LAWS GC-10
28. RIGHT TO USE THE WORK GC-11
29. PROVISIONS REQUIRED BY LAW..... ..GC-11
30. WAIVER..... GC-11
31. USE OF PREMISES AND REMOVAL OF DEBRIS..... .GC-11
32. RIGHT-OF-WAY AND SUSPENSION OF WORK GC-11

INDEX TO GENERAL CONDITIONS

33. CONSTRUCTION EQUIPMENT AND MACHINERY GC-12
34. GENERAL WARRANTY PERIOD GC-12
35. PROCEDURE IN CONSTRUCTION GC-12
36. APPRENTICES GC-13
37. CONTROL OF WORK GC-13
38. CITY'S CONTROL NOT LIMITED..... GC-13
39. AUTHORITY AND DUTIES OF INSPECTORS GC-13
40. INSPECTION AND CORRECTION OF WORK GC-14
41. CONTRACTOR'S OBLIGATIONS GC-14
42. TOILET ACCOMMODATIONS AND DRINKING WATER..... GC-14
43. SAFETY AND HEALTH REGULATIONS GC-15
44. OWNERSHIP OF DRAWINGS AND SPECIFICATIONS..... GC-15
45. RESIDENTS' PREFERENCE IN WORK ON OTHER PUBLIC FACILITIES GC-15
46. LISTING OF EMPLOYMENT OPENINGS GC-15
47. SERVICE OF PROCESS GC-15
48. CITY OF WATERBURY ORDINANCE CHAPTER 34 ..... GC-15
49. WAGE RATES GC-15
50. SCHEDULE AND POSTING OF MINIMUM WAGE RATES..... GC-16
51. COMPUTATION OF WAGES AND OVERTIME COMPENSATION. GC-16
52. WAGE UNDERPAYMENTS AND ADJUSTMENTS..... GC-16
53. CONFORMANCE OF WORK GC-16
54. DIMENSIONS AND SCHEDULES..... GC-17
55. PROTECTION FROM STORM GC-17
56. PROTECTION OF WORK AND MATERIALS GC-17
57. FURTHER SAFEGUARDS..... GC-17
58. FIRST AID TO INJURED..... GC-17
59. CONFORMANCE WITH DIRECTIONS GC-17
60. COMPETENT HELP TO BE EMPLOYED GC-17
61. STREETS AND SIDEWALKS TO BE KEPT OPEN..... GC-18
62. LIGHTS, BARRIERS, FENCES, WATCHMEN AND INDEMNITY ... GC-18
63. WORK OUTSIDE REGULAR HOURS..... GC-18

64. BUS LINE INTERFERENCE GC-19
65. COLD WEATHER WORK GC-19
66. BLASTING AND EXPLOSIVES GC-19
67. TUNNELING GC-19
68. RESERVED MATERIALS/EXCAVATED MATERIALS GC-19
69. OBSTRUCTIONS AND CROSSOVERS GC-20
70. DIRECTIONAL SIGNS AND LIGHTS GC-20
71. MAINTENANCE OF WORKPLACE GC-20
72. OPERATIONS AT SEVERAL POINTS GC-20
73. INTERFERENCE WITH EXISTING STRUCTURES GC-20
74. TURF, TOPSOIL AND OTHER REPLACEMENT ITEMS GC-21
75. MATERIALS GC-21
76. DEFECTIVE MATERIALS GC-21
77. INSPECTION AND TESTING OF FURNISHED MATERIALS. GC-21
78. SAMPLES AND ORDERING LISTS GC-21
79. SANITARY CONVENIENCES GC-21
80. FINISHING AND CLEANING UP GC-22
81. RIGHTS OF ACCESS GC-22
82. WORK BY OTHERS GC-22
83. WORK WITHIN THE LIMITS OF PRIVATE PROPERTY GC-22
84. LOADING GC-23
85. COMPLETION OF WORK GC-23
86. DUST AND SPILLAGE CONTROL GC-24
87. CARE OF THE WORK GC-24
88. EMERGENCY WORK GC-24
89. FIRE PREVENTION AND PROTECTION GC-24
90. PLANIMETER GC-24
91. SUPERINTENDENCE GC-24
92. CONTRACT ADMINISTRATION COSTS - OUTSIDE REGULAR HOURS GC-25
93. DAILY REPORTS GC-25
94. MATERIAL AND WORKMANSHIP GC-25
95. TEMPORARY WATER SUPPLY GC-25

96. FITTING AND COORDINATION OF WORK GC-25
97. ARCHAEOLOGICAL FINDS GC-26
98. EXCAVATIONS NEAR UNDERGROUND UTILITIES GC-26
99. WATER QUALITY OF WELLS. GC-26
100. WORK IN STATE HIGHWAYS.....GC-26
101. EXISTING INSPECTION REPORTS GC-27
102. TEST REPORTS; CERTIFICATES OF COMPLIANCE AND SHIPPING LISTS GC-27
103. CLEANING FINISHED WORK.....GC-27
104. THIS SECTION INTENTIONALLY OMITTED GC-27
105. COMPLIANCE TO ACTS AND EXECUTIVE ORDERS.....GC-27
106. SEMI-FINAL INSPECTION/SUBSTANTIAL COMPLETION.....GC-28
107. FINAL INSPECTION GC-28
108. SEMI-FINAL PAYMENT APPLICATION GC-28
109. FINAL COMPLETION/FINAL ACCEPTANCE OF PROJECT GC-28
110. FINAL PAYMENT APPLICATION GC-28
111. ACCEPTANCE OF FINAL PAYMENT……..….GC-29

GENERAL CONDITIONS

INTRODUCTORY NOTE:

These General Conditions supplement the provisions and requirements of the Contract and modify all Contract Documents which follow it numerically, as set forth in Section 1.2 of the Contract. The General Conditions may be amended, revised or supplemented by the Special Conditions which are project specific. The Contractor's attention is directed to the attached Special Conditions for any amendments, revisions or supplements to the General Conditions for this project. The terms used in these General Conditions which are defined in the Contract have the meanings assigned to them in said Contract.

This section applies equally and specifically to all contractors supplying labor and/or equipment and/or materials for this Project and all drawings, specifications and general provisions of the Contract apply to these General Conditions. Where items of the Contract are repeated, it is intended to call particular attention to or qualify them; it is not intended that any other parts of the Contract shall be assumed to be omitted if not repeated herein.

Unless expressly provided for otherwise, the costs associated with all work under the General Conditions shall be included in Contractor's Total Price Proposal. As used herein, "Bid" shall mean "Proposal."

There are three (3) affected companies which occupy the property and perform work at the property of the Water Pollution Control Facility where this construction contract will take place. They are:

- Jacobs Engineering Group, the operator of the Water Pollution Control Facility ("Jacobs")
- Synagro Northeast, LLC, the operator of the sludge sewage incinerator ("Synagro")
- HyAxiom Inc., the operator of the on-site fuel cell ("HyAxiom")

The Contractor shall coordinate all work activities with the parties mentioned above and keep the Project Engineer apprised of this coordination. The Contractor shall maintain access to all parts of the facilities for the above companies throughout the duration of the construction contract.

ARTICLE 1. PLANS AND SPECIFICATIONS AT THE SITE

1.01 The Contractor shall maintain at the Project site two (2) copies of all Plans, Specifications, Addenda, approved Shop Drawings, Change Orders and other Modifications, Schedules and Instructions, in good order. One copy is to be marked to record all changes made during construction. These shall be available at all times to the Project Engineer and the City or their authorized representatives. At the conclusion of construction, the Contractor is to turn one (1) corrected set over to the Project Engineer.

ARTICLE 2. CONSTRUCTION PROGRESS SCHEDULE

2.01 Within seven (7) calendar days after the issuance of a written Notice to Proceed, and prior to commencement of any work on site, the Contractor shall submit for the approval of the City three (3) copies of a Construction Progress Schedule which shall be developed by the Contractor through cooperation of the Project Engineer or authorized personnel. At the same time, the Contractor shall submit the Schedule of Values, Sedimentation and Erosion Control Measures, Water Control Plan and Environmental Protection Plan, as outlined in the various Articles of these General Conditions.

2.02 The Construction Progress Schedule shall indicate the proposed scheduling of the items of work listed in the various divisions of the work in the specifications. The schedule shall state the methods for doing each portion of the work. The schedule shall also indicate all subcontractors to be utilized on the Contract and the portions of the Contract that they will be performing. The Contractor shall evaluate the status of the Project at least monthly, comparing it to the original schedule, which shall be revised as required. The Contractor shall notify the Project Engineer immediately of any circumstances that may affect the current schedule.

2.03 The Contractor shall perform the work of this Contract to satisfy the Construction Progress Schedule as approved by the Project Engineer. However, the Project Engineer and City reserve the right to amend and alter the Construction Progress Schedule, as approved, at any time and in a manner which the Engineer deems to be in the best interests of the City.

2.04 The Contractor shall be required to execute his work in accordance with the Construction Progress Schedule as prepared and in accordance with any additional requirements specified herein and approved by the Project Engineer. The Construction Progress Schedule shall forecast the times for doing each portion of the work. The Contractor shall arrange the work under this Contract to conform with the Construction Progress Schedule, as it may be revised by the Engineer from time to time, at no additional expense to the City.

ARTICLE 3. ESTIMATED QUANTITIES

3.01 Any Estimated Quantities for the Project furnished on the Bid Form are for Bid comparison purposes only and are not represented to be actual quantities for completion of the Work. Within the limits of available funds, the Contractor will be required to complete the work specified herein at the unit prices provided in the Bid Form whether it involves quantities greater or lesser than the estimate. The Contractor will be compensated only for work actually performed.

ARTICLE 4. SCHEDULE OF VALUES; APPLICATION FOR PAYMENT

4.01 Within seven (7) calendar days week after the issuance of a written Notice to Proceed, as a basis for estimating partial payments, the Contractor shall submit for the approval of the City, on forms provided by the City, a certified Schedule of Values, broken down into quantities and unit costs for the various parts of the work, divided as may be directed and aggregating the total sum of the Contract; and if required, he shall submit evidence supporting this schedule.

4.02 The Contractor's requisition for payment shall be submitted on forms provided by the City and shall be in such numbers of copies as may be designated by the City. Sample forms are included in the Bid Documents. Alternate payment application forms may be utilized provided they are approved by the City, in writing, prior to submission by the Contractor.

4.03 If the Project is funded by multiple funding sources, the Contractor may be required to submit separate requisitions for payment to each source, on the forms provided by each source and in accord with all requirements of each individual funding source.

4.04 For Lump Sum projects, the requirements for the Schedule of Values are further defined as follows: a) the Schedule of Values shall delineate the various tasks that comprise the lump sum bid item. Each item in the Schedule of Values shall include its proper share of overhead and profit. This schedule, when accepted by Project Engineer, shall only be used as a basis for Contractor’s periodic payment applications. No payment will be made to Contractor until such Schedule has been submitted and accepted by Project Engineer, and b) the lump sum bid item shall break the bid price down sufficiently to provide a convenient and realistic means for determining the amount of work done during various stages of progress.

ARTICLE 5. PARTIAL PAYMENTS

5.01 The City will review the Contractor's monthly requisitions for Partial Payments to arrive at what is, in its opinion, a fair and just estimate of the materials suitably stored on the site and the amount of work performed on the Contract. At its discretion, the City may allow to be included in the monthly requisitions materials stored off the site. In the event the City allows the Contractor to include in its requisitions payments for materials stored off the site, the Contractor shall also submit any additional bonds and/or insurance certificates relating to off-site stored material, and follow such other procedures as may be required by the City.

5.02 In making such Partial Payments for the Project, retainage shall be held in the amount of five percent (5 %) of the value of work completed to date. The Retainage does not include additional sums that the City may withhold due to the Contractors failure to comply with construction plans, specifications etc. deemed provisions of this contract.

5.03 Where prices are not broken down sufficiently in the Schedule of Values to accurately determine the value of work completed, Project Engineer will estimate the value of work completed and will deduct some amount so as to arrive at a conservative value which will allow City to easily complete the Work with the unpaid balance. When the required detail in the Schedule of Values is not provided by Contractor, Contractor agrees to accept Project Engineer's determinations.

ARTICLE 6. INSPECTION AND TESTS

6.01 All material and workmanship (if not otherwise designated by the Specifications) shall be subject to inspection, examination and testing by the City and/or Project Engineer at any and all times during manufacture and/or construction and at any and all places where such manufacture and/or construction is carried on. All tests shall be made at the Contractor's expense. Notice of the time of all tests to be made at the site shall be given to all interested parties.

6.02 **Not used.**

6.03 If, at any time before final acceptance of the entire Project, the City and/or Project Engineer considers it necessary or advisable to examine any portion of the Project already completed by removing or testing out the same, the Contractor shall upon request furnish promptly all necessary facilities, labor and materials. If such work is found to be defective in any material respect because of a fault of the Contractor or any of its subcontractors, or if any work shall have been covered over without the approval or consent of the City (whether or not it is found to be defective), the Contractor shall be liable for testing costs and all costs of correction, including labor, material, services of required consultants, additional supervision and administrative costs.

6.04 Unless expressly provided for otherwise, for Projects that include material testing to ensure compliance with the Technical Specifications, the Contractor shall be responsible for all testing as required in the relevant sections of the Technical Specifications.

ARTICLE 7. UTILITIES

7.01 The accuracy and completeness of the utility information shown on the Plans is not guaranteed. The Contractor shall make its own investigation of the extent and location of utilities and of the possibility of relocation work by the utility companies, and shall plan its operations accordingly. No claim for any delays, damage or extra work occasioned thereby will be allowed.

7.02 The Contractor shall allow others access to the Project for the purpose of placing, relocating or maintaining utilities, and he shall cooperate in every way in the performance of this Project.

7.03 The Contractor shall notify the utility owners well in advance of the time the Contractor proposes to perform any work which would endanger utility installations, and the Contractor shall cooperate with the utility owners in relocating and/or protecting such installations during construction operations.

7.04 No payment will be made to the Contractor for locating, protecting and making arrangements for relocating public utilities or for any delays caused thereby. The Contractor shall include all costs of this Project in other scheduled items of the Contract.

ARTICLE 8. SEDIMENTATION AND EROSION CONTROL

8.01 All watercourses shall be protected from sedimentation, both during and after construction. The Contractor shall control erosion and sedimentation problems in accordance with Connecticut Guidelines for Soil Erosion and Sediment Control prepared by the Connecticut Council on Soil and Water Conservation, dated 2002, as amended.

8.02 The Contractor shall submit the Sedimentation and Erosion Control Plan for the approval of the Project Engineer within one (1) week after the Notice to Proceed.

8.03 The Contractor shall be responsible for providing silt fences, staked haybales and other temporary erosion control measures which may be required to properly complete this Project. No extra compensation will be allowed, due to water or precipitation levels fluctuation.

ARTICLE 9. PROTECTION OF ENVIRONMENTAL RESOURCES

9.01 The environmental resources within the Project boundaries and those affected outside the limits of permanent work under this Contract shall be protected during the entire period of this Contract. The Contractor shall confine its activities to areas defined by the Plans and Specifications. Environmental protection shall be as stated in the following subparagraphs:

A. Prior to the beginning of any construction, the Contractor shall identify all land resources to be preserved within the work area. The Contractor shall not remove, cut, deface, injure or destroy land resources including trees, shrubs, vines, grasses, topsoil and land forms without special written permission from the property owner. No ropes, cables or guys shall be fastened or attached to any trees for anchorage unless specifically authorized. Where such special emergency use is permitted, the Contractor shall provide effective protection for land and vegetation resources at all times as defined in the following subparagraphs.

B. Prior to any construction, the Contractor shall mark the areas that are not required to accomplish all work to be performed under the Contract. Isolated areas within the general work area which are to be saved and protected shall also be marked or fenced. Monuments and markers shall be protected before construction operations commence. Where construction operations are to be conducted during darkness, the markers shall be visible. The Contractor shall convey to its personnel the purpose of marking and/or protection of all necessary objects.

C. Trees, shrubs, vines, grasses, land forms and other landscape features indicated and defined on the Plans to be preserved shall be clearly identified by marking, fencing or wrapping with boards, or any other approved techniques.

D. Earthwork brought to final grade shall be finished as indicated and specified. Side slopes and back slopes shall be protected as soon as practicable upon completion of rough grading. All earth work shall be planned and conducted to minimize the duration of exposure of unprotected soils. Except in instances where the constructed feature obscures borrow areas, quarries and waste material areas, these areas shall not initially be cleared in total. Clearing of such areas shall progress in reasonably sized increments as needed to use the areas developed as approved by the City and/or Project Engineer.

E. Runoff from the construction site shall be controlled by the construction of diversion ditches, benches and berms to retard and divert runoff to protected drainage courses, and any measures required by area wide plans approved under Paragraph 208 of the Clean Water Act, as amended.

F. The Contractor shall construct or install all temporary erosion control features as indicated in the submitted Sedimentation and Erosion Control Plans, or directed by the City and/or Project Engineer. Temporary erosion control measures such as berms, dikes, drains, grassing and mulching shall be maintained until construction of the Project is completed.

G. The Contractor's field offices, staging areas, stockpile storage and temporary buildings shall be placed in areas designated on the submitted Plan. Temporary movement or relocation of the Contractor's facilities shall be made only on approval by the City and/or Project Engineer.

H. Borrow areas shall be managed to minimize erosion and to prevent sediment from entering nearby watercourses.

I. Spoil areas shall be managed and controlled to limit spoil areas and to prevent erosion of soil or sediment from entering nearby watercourses. Spoil areas shall be developed in accordance with the grading plan indicated on the Plans.

ARTICLE 10. ENVIRONMENTAL PROTECTION PLAN

10.01 Within seven (7) calendar days after the issuance of a written Notice to Proceed, and prior to commencement of any work on site, the Contractor shall submit an Environmental Protection Plan for the approval of the City in accordance with the provisions herein specified. The plan shall include but not be limited to the following:

A. A list of Federal, State and Local laws and regulations concerning environmental protection, pollution control and abatement that are applicable to the Contractor's proposed operations and the requirements imposed by those laws and regulations.

B. Methods for protection of features to be preserved within authorized work areas. The Contractor shall prepare a listing of methods to protect resources needing protection, i.e., trees, shrubs, vines, grasses and groundcover, landscape features, air and water quality, fish and wildlife, soil, historical, archeological and cultural resources.

C. Procedures to be implemented by the Contractor to provide the required environmental protection and to comply with applicable laws and regulations. The Contractor shall set out the procedures to be followed to correct pollution of the environment due to accident, natural causes or failure to follow the procedures set out in accordance with the Environmental Protection Plan.

D. The location of the nearest suitable solid waste disposal area and a permit allowing the Contractor to use those facilities.

E. Drawing showing locations of any proposed temporary excavations or embankments for haul roads, stream crossings, material storage areas, structures, sanitary facilities, and stockpiles of excess' or spoil materials.

F. Environmental monitoring plans for the job site, including land, water, air and noise monitoring as necessary, and as required by the Project Engineer.

G. Traffic control plan when necessary.

H. Methods of protecting surface and ground water during construction activities.

I. Work area plan showing the proposed activity in each portion of the area and identifying the areas of limited use or nonuse. The plan should include measures for marking the limits of use areas.

ARTICLE 11. TEMPORARY UTILITIES

11.01 Unless expressly otherwise provided for in the Contract Documents, a) the Contractor shall be responsible for determining and supplying at no cost to the City the temporary utilities that will be needed to complete the work, and b) the necessary temporary utilities shall be installed at the start of the Project. The Contractor shall be responsible for determining and supplying at no cost to the City all temporary utilities of any nature whatsoever needed to complete the work. Unless otherwise provided for in the Bid Documents, all necessary temporary utilities shall be installed at the start of the Project and removed prior to final completion of the Project, with the site being left in the same condition as it was at the start of the Project, all unless otherwise authorized in writing by the City.

ARTICLE 12. ABBREVIATIONS

12.01 Where one of the following abbreviations are used in the Specifications, they shall have the meaning set forth opposite each below:

AASHTO	American Association of State Highway and Transportation Officials
ACI	American Concrete Institute
AGA	American Gas Association
AIEE	American Institute of Electrical Project Engineers
AISC	American Institute of Steel Construction
API	American Petroleum Institute
ANSI	American National Standards Institute
ASCE	American Society of Civil Engineers
ASHRAE	American Society of Heating, Refrigeration and Air Conditioning Engineers
ASME	American Society of Mechanical Engineers
ASTM	American Society of Testing and Materials
AWG	American (or Brown and Sharpe) Wire Gauge
AWWA	American Water Works Association
CONNDOT	Connecticut Department of Transportation
DEP	Department of Environmental Protection
EDR	Equivalent Direct Radiation
EPA	Environmental Protection Agency
FWQA	Federal Water Quality Administration
IBR	Institute of Radiator and Boiler Manufacturers
MCB	Master Car Builders
NBS	National Bureau of Standards
NEC	National Electrical Code (latest edition)
NEMA	National Electrical Manufacturers Association
NEWWA	New England Water Works Association
NFPA	National Fire Protection Agency
NPT	National Pipe Thread

SMACNA	Sheet Metal and Air Conditioning Association
OS&Y	Outside Screw and Yoke
STL.WG	United States Steel Wire, Washburn and Moen, American Steel and Wire Companies and Roebling Gauge
USS GAUGE	United States Standard Gauge
WOG	Water, Oil, Gas
WSP	Water Steam Pressure
"Federal Specification"	A Federal specification issued by the Federal Supply Services Administration, Washington, D.C.

ARTICLE 13. SUBSURFACE EXPLORATION

13.01 Where applicable, the boring logs, probes and related information contain data regarding subsurface conditions at the dates and location indicated. This information is shown for the convenience of the Contractor, but is not guaranteed to be correct or complete, and it is not warranted that it represents a true or approximately true picture of the actual subsurface conditions to be encountered.

ARTICLE 14. CONTRACT AND CONTRACT DOCUMENTS

14.01 The City shall interpret its own requirements. In case of any conflict or inconsistency between the provisions of this signed portion of the Contract and those of the Specifications, the provisions of the signed portion of the Contract shall govern.

14.02 The City's record copy of the Contract Documents shall control and shall be effective and binding on the Contractor. In the event that any provision in the Contract Documents conflict with any other provision therein, the priority of the documents shall be in accordance with Section 1.2 of the Contract.

ARTICLE 15. SHOP DRAWINGS, CATALOG CUTS AND SAMPLES

15.01 The Contractor shall promptly submit to the Project Engineer three (3) copies of each submittal prepared in accordance with the approved schedule. After examination of such submittal by the Project Engineer and the return thereof, the Contractor shall make such corrections to the submittal as have been indicated and shall furnish the Project Engineer with five corrected copies. If requested by the Project Engineer, the Contractor must furnish additional copies. Regardless of corrections made on, or approvals given to, such submittal by the Project Engineer, the Contractor shall nevertheless be responsible for the accuracy of such submittal. The Contractor shall also be responsible for the submittal's conformity to the Submittal and Specifications, unless the Contractor notifies the Project Engineer in writing of any deviations at the time of submission of the submittal.

15.02 Submittal of all fabricated work shall be submitted to the Project Engineer and no work shall be fabricated unless it is done at the Contractor's own risk until approval has been given by the Project Engineer and City.

15.03 The Contractor shall submit all submittals on dates sufficiently in advance of requirements in order to enable the Project Engineer and City to properly review them. This period shall include time to correct, resubmit and recheck, if necessary, and no claim for delay will be granted to the Contractor because of the Contractor's failure in this respect. The Project Engineer and City will be given a minimum of four (4) weeks for the initial review of each submitted submittal.

15.04 All submitted submittals must bear the approval stamp of the Contractor and reference conformance to the applicable provisions of the Specifications as evidence that the Contractor has checked the drawings. Any drawings submitted without this stamp of approval will not be considered and will be returned to the Contractor for resubmission. If the submittals show variations from the requirements of the Contract Documents because of standard shop practice or other reason, the Contractor shall make specific mention of such variation in the letter of submission to the Project Engineer. If the variation is acceptable to the Project Engineer and City, suitable action may be taken for proper adjustment. If not acceptable, the Contractor shall not be relieved from the responsibility for executing the work in accordance with the Contract Documents, although such submittals had been approved.

15.05 Where submittals are submitted by the Contractor that indicate a departure from the Contract Drawings which the Project Engineer deems to be a minor adjustment and in the City's interest and not involving a change in the Contract price or an extension in time, then the Project Engineer may approve the drawings. Such approval will contain, in substance the following:

> The modification shown on the attached drawings is approved in The interest of the City to effect an improvement for the project and is ordered with the understanding that it does not involve any change in the Contract price or time. The modification is generally subject to all Contract stipulations and covenants and it is without prejudice to any and all rights of the City under the Contract.

The approval of submittals will be general and shall not relieve the Contractor from the responsibility for adherence to the Contract nor of the responsibility for any errors that may exist.

15.06 The Contractor agrees to hold the Project Engineer and the City harmless and to defend them against damage or claims for damages arising out of injury to others or to property of third parties which result from errors on shop or working drawings, whether or not they have been approved by the Project Engineer and/or the City.

ARTICLE 16. CONTRACTOR'S TITLE TO MATERIALS

16.01 No material, supplies or equipment for the work shall be purchased by the Contractor, or by any Subcontractor, subject to any chattel mortgage or under any conditional sale or other agreement by which an interest therein or in any part thereof is retained by the seller or supplier. The Contractor warrants good title to all material, supplies and equipment installed or incorporated in the work. The Contractor further warrants that, upon completion of all work, he will deliver the premises, together with all improvements and appurtenances constructed thereon, to the City free of any claims, liens, charges or encumbrances. The Contractor further warrants that neither the Contractor nor any person, firm or corporation furnishing any material, labor or equipment for any work covered by this Contract shall have a right to lien upon the premises or any improvement or appurtenance thereon.

ARTICLE 17. "OR EQUAL" CLAUSES

17.01 Unless otherwise provided for in the Bid Documents, the Contract will be on the basis of material and equipment described on the Bid Documents. However, subsequent to award of the Work, whenever a material or article required is specified or shown on the plans by using the name of a proprietary product or of a particular vendor or manufacturer, any materials or article which, in the sole discretion of the Project Engineer, is equal or superior to the specified item to material, may be considered an “equal.” Requests for substitutions must be supported by evidence such as technical data, test results, or other pertinent information that demonstrate that the substitute offered is equal or better than the specification's requirements. Such items shall not be purchased or installed without the written approval of the Project Engineer. In all cases, only new materials shall be used for the work.

ARTICLE 18. REPRESENTATIONS OF THE CONTRACTOR

18.01 The Contractor represents and warrants:

(a) That he is financially solvent and that he is experienced and competent to perform the type of work or to furnish the plant, material or equipment to be performed or furnished by him; and

(b) That he is familiar with all Federal, State and municipal laws, ordinances, orders and regulations which may in any way affect the work of those employed therein, including but not limited to any special acts relating to the work or to the project of which it is a part; and

(c) That such permanent and temporary work required by the Contract Documents to be done can be satisfactorily constructed and be used for the purpose for which it is intended, and that such construction will not injure any person nor damage any property; and

(d) That he has carefully examined the drawings, specifications and addendum (or addenda) if any, and the site of the work, and that, from his own investigations, he has satisfied himself as to the nature, quality and quantity of surface and subsurface materials likely to be encountered; of the character of equipment required for the work; of other facilities needed for the performance of the work; of the general and local conditions and of all other materials which in any way may affect the work and its performance; and

(e) That he is aware of the hazards involved in the work and the danger to life and property both evident and inherent and that he will conduct the work in a careful and safe manner without injury to persons or property; and that he can provide the necessary equipment, labor and materials to complete the contract work within the specified contract duration.

ARTICLE 19. PROTECTION OF WORK AND PROPERTY (EMERGENCY)

19.01 The Contractor shall at all times safely guard and protect the City's property from injury or loss in connection with this contract. He shall at all times safely guard and protect his own work and that of adjacent property from damage. The Contractor shall replace or make good any such damage, loss or injury unless such is caused directly by errors contained in the Contract or by the City or his duly authorized representatives.

19.02 In case of an emergency that threatens loss or injury of property and/or safety of life, the Contractor will be allowed to act in a diligent manner without previous instructions from the City. He shall notify the City immediately thereafter. Any claim for compensation for this work by the Contractor due to such extra work shall be promptly submitted to the City for approval of payment.

19.03 Where the Contractor has not taken action but has notified the City of an emergency threatening injury to persons or damage to the work or to any adjoining property, he shall act as instructed or as authorized by the City.

19.04 The amount of reimbursement claimed by the Contractor on account of any emergency action shall be determined in the manner provided elsewhere in the Contract Documents.

ARTICLE 20. WEATHER CONDITIONS

20.01 In case of temporary suspension of the work, or during inclement weather, or whenever the City shall direct, the Contractor shall carefully protect his work and materials against damage or injury from the weather. The Contractor shall cause all his subcontractors to provide the same protection for their portion of the work. If, in the opinion of the City, any work or material was damaged or injured by reason of failure on the part of the Contractor, or any of his subcontractors, so to protect his work, or otherwise damaged by the negligence of the Contractor or any of his subcontractors or their agents or servants, or is otherwise defective, such materials shall be removed and replaced at the expense of the Contractor.

20.02 All work shall be temporarily suspended when the Contractor can no longer properly pave exposed areas in accordance with the plans and specifications during inclement weather or during winter months.

ARTICLE 21. SUBLETTING

21.01 The Contractor is not to assign, transfer or sublet the Contract in whole or in part to any other person or persons without prior written permission from the City. The Contractor must keep the Contract in his name and control until all work is completed and accepted by the City. The Contractor shall likewise not assign any of the money payable under this Contract. Approval by the City of the subletting of any part of the work shall not, under any circumstances, relieve the Contractor or his Surety of any liabilities or obligations under the terms of the Contract Documents.

21.02 The Contractor shall be as fully responsible to the City for the acts and omissions of his subcontractors, and of the persons either directly or indirectly employed by them, as he is for the acts and omissions of persons directly employed by him. Should any subcontractor violate any of the terms of these specifications, the City may, at its option, require the Contractor to end and terminate such subcontract.

21.03 The Contractor shall cause appropriate provisions to be inserted in all subcontracts relative to the work to bind subcontractors to the Contractor by the terms of the Contract and the General Conditions and other contract documents. This language is to be applicable insofar as necessary to the work and is to give the Contractor the same power over as regards terminating any subcontract as the City may exercise over the Contractor under any provisions of the Contract Documents.

21.05 Nothing contained in this Contract shall create any contractual relation between the City and any subcontractor.

ARTICLE 22. SUBSTITUTE BOND

22.01 If, at any time, the Contractor's Surety or Sureties, or the carriers of other insurance herein specified to be written, become insolvent or, in a reasonable judgment of the City, become unsafe or unsound then, upon five (5) business days written notice from the City to the Contractor, the Contractor shall substitute such Performance and Labor and Material Bond or insurance with such other Surety or carrier in such form as shall be acceptable to the City. Any additional premium caused by such substitution shall be paid for by the Contractor. No further payments will be deemed due nor will be made until the new Surety or Sureties have furnished such an acceptable bond to the City.

ARTICLE 23. RIGHT TO WITHHOLD PAYMENTS

23.01 The City may withhold from the Contractor so much of any approved payments due as may in the judgment of the City be necessary to:

1. Assure the payment of any lien, stop notice or claim, filed with the City for work, labor, or materials done, performed or delivered and used in the prosecution of the work herein provided for (whether in strictly legal form or otherwise)
2. Protect the City from loss due to defective work not remedied or through any improper or defective machinery, implements or appliances used by the Contractor or for failure of the Contractor to fully comply with any requirements of the Contract
3. Protect the City from loss due to injury to persons or damage to work or property of other contractors, subcontractors or others caused by the act' or neglect of the Contactor or any subcontractors.

23.02 The City shall have the right, as agent for the Contractor, to apply any amounts so withheld in such manner as the City may deem proper to satisfy such claims or to secure such protection. Such applications of such money shall be deemed payments to the account of the Contractor.

ARTICLE 24. PAYMENTS BY CONTRACTOR

24.01 The Contractor shall pay:

1. For all transportation and utility services not later than the 20th day of the calendar month following that in which services are rendered.
2. For all material, tools and other expendable equipment to the extent of ninety-five per cent (95 %) of the cost thereof, not later than the 20th day of the calendar month following that in which the materials, tools and equipment are delivered at the site of the project.
3. For all material, tools and other expendable equipment the balance of the cost in (2) above not later than the 30th calendar day of the month following the completion of that part of the work in or on which such material, tools and other expendable equipment are incorporated.
4. To each of the subcontractors not later than the 5th day following each payment to the Contractor, the respective amounts allowed the Contractor on account of the work performed by the subcontractors to the extent of such subcontractor's interest therein.

ARTICLE 25. NOTICE OF WARNING

25.01 If the Contractor shall fail to make prompt payment to persons supplying labor or materials for the work; or refuse or fail to supply enough properly skilled workmen or proper materials; or refuse or fail to prosecute the work or any part thereof in accordance with the Contract Documents or with such diligence as will insure its completion within the period herein specified (or any duly authorized extension thereof); or fail to complete the work within said period; or refuse to regard laws ordinances, codes or instructions of the City then the City shall forward A Notice of Warning to the Contractor by registered mail at the address given in the Contract. In the event the Contractor fails to comply with said Notice of Warning within five (5) calendar days from receipt thereof, the City shall have the right to terminate the Contract.

ARTICLE 26. PROGRESS MEETINGS

26.01 Progress meetings will be held every two (2) weeks at locations, dates and times selected by the City for the purpose of reviewing, scheduling and coordinating the Project’s progress as well as other matters.

ARTICLE 27. REGULATIONS AND LAWS

27.01 The Contractor shall keep himself fully informed of all existing and current Municipal, State or Federal ordinances, regulations, laws, or permits in any way limiting or controlling the operations or actions of those engaged in the work or affecting the materials supplied to or by them. The Contractor shall at all times observe and comply with all such valid and binding ordinances, laws, regulations and permits. The Contractor shall protect and indemnify the City and its representatives against any claims arising from, or based upon, any violation of the same.

ARTICLE 28. RIGHT TO USE THE WORK

28.01 The City may enter upon the use of the whole or of any portion of the work, which may be in condition to use, at any time before its final acceptance. Such use shall not constitute, or be evidence of, acceptance by the City or by the Project Engineer of the whole or any part of the material furnished or work performed under the Contract.

ARTICLE 29. PROVISIONS REQUIRED BY LAW

29.01 Each and every provision of law and clause required to be inserted in this Contract shall be deemed to be inserted herein and the Contract shall be read and enforced as though it were included herein. If, through mistake or otherwise, any such provision is not inserted, then, upon application of either party, the Contract shall forthwith be physically amended to make such insertion.

29.02 If this Contract contains any unlawful provisions not an essential part of the general structure of the Contract, and which shall not appear to have been a controlling or material inducement in the making thereof, the same shall be deemed stricken from the Contract without affecting the binding force of the remainder.

ARTICLE 30. WAIVER

30.01 Neither the inspection by the City or Project Engineer or by any of their employees; nor any order, measurement or certificate by the Project Engineer; nor any order by the City for the payment of any money; nor any payment for or acceptance of the whole or any of the work by the Project Engineer for the City; nor any extension of time; nor any possession taken by the City or its employees shall operate as a waiver of any provision of this Contract or of any power herein reserved to the City. Nor shall such action waive any right to damages herein provided. Nor shall any waiver of any breach of the Contract constitute a waiver of any other or subsequent breach. Any remedy provided in this Contract shall be construed as cumulative - i.e. in addition to each and every other remedy herein provided.

30.02 No modification of this Contract or waiver of any of its items or provisions, except as herein provided, shall be made by, or on behalf of, the City, excepting by a resolution duly adopted by said City and spread upon its minutes.

ARTICLE 31. USE OF PREMISES AND REMOVAL OF DEBRIS

31.01 The Contractor expressly undertakes at his/her own expense:

1. To take every precaution against injuries to persons or damage to property.
2. To store apparatus, materials, supplies and equipment in such orderly fashion at the site of the work as will not unduly interfere with the progress of the work or the work of any other contractor.
3. To place upon the work or any portion thereof only such loads as are consistent with the safety of that portion of the work.
4. To frequently clean up all refuse, rubbish, scrap materials and debris caused by the Contractor's operations to the end that at all times the site of the work shall present a neat, orderly and work manlike appearance.
5. To remove all surplus material; falsework; temporary structures including foundations thereof; plant of any description and debris of any nature resulting from the Contractor's operations before final payment is made.
6. To put the site in a neat orderly condition, to remove all clean-up materials, to remove such materials from the construction site, and to deposit them in a refuse disposal site at his/her expense.
7. To effect all cutting, fitting or patching of work required to make the same conform to the Drawings and Specifications and, except with the consent of the City, not to cut or otherwise alter the work of any other contractor.

ARTICLE 32. RIGHT-OF-WAY AND SUSPENSION OF WORK

32.01 Land and rights-of-way for the purposes of this Contract will be furnished by the City to the extent shown on the Drawings. The City will use diligence in acquiring said land and rights-of-way as speedily as possible. However, it is possible that not all land and rights-of-way will be obtained as herein contemplated before construction commences. In such case the Contractor shall begin the work upon such land and rights of-way as the City may have previously acquired. No claim for damages whatsoever will be allowed by reasons of the delay in obtaining the remaining lands and/or rights-of-way. Should the City be prevented or enjoined from proceeding with the work, or from authorizing its prosecution, either before or after the commencement, by reason of litigation or by reason of its inability to procure any lands or rights-of-way for the said work, the Contractor shall not be entitled to make or assert claim for damage by reason of said delay. Neither shall the Contractor be entitled to withdraw from the Contract because of these occurrences. In the event of any of the above occurrences, the time for completion of the work shall be extended to such time as the City determines will provide compensation for the time lost by such delay. Such determination to be set forth in writing.

ARTICLE 33. CONSTRUCTION EQUIPMENT AND MACHINERY

33.01 The Contractor shall furnish and maintain, at its own cost and risk, all tools, apparatus and appliances, hoists and/or cranes and power for same, scaffolding, runways, ladders, temporary supports and bracing and all other similar work or material necessary to insure speed, convenience and safety in the execution of its Contract. All such items shall be subject to approval of the City, upon the Project Engineer's recommendation, as to general stability, type and location, but the responsibility for proper design, strength and safety shall remain with the Contractor. All such items shall comply with OSHA regulations and all other applicable codes, statutes, rules and regulations.

33.02 The Contractor shall provide all drains, drainage, ditches and pumping apparatus (including power and attendance for same) that may be necessary to keep all excavations and sub-grade work free from water.

33.03 All machines, equipment, trucks and vehicles used in the prosecution of the work, or in connection therewith, shall be in proper working condition at all times. Only gasoline, electric or diesel engines shall be used for the power in operating equipment.

33.04 The Contractor shall be responsible for curtailing noise, smoke, fumes or other nuisances resulting from the operations. The. Contractor shall, upon written notification from the City or Project Engineer, make any repairs, replacements, adjustments or additions and furnish mufflers when necessary to' fulfill requirements. No oil tanks for fueling equipment shall be stored less than one hundred (100) feet from any watercourse.

33.05 All costs involved in complying with the stipulations outlined shall be included in the various prices bid in the proposal.

ARTICLE 34. GENERAL WARRANTY PERIOD

34.01 If, within the one year Warranty Period as set forth in Section 7 of the Contract, any portion of the work shall, in the opinion of the City, require repairing, replacing or rebuilding, the Contractor shall start such repairs within five (5) business days after receipt of notice from the City. If the Contractor shall fail to or neglect to start the repairs within five (5) business days, the City may employ such other person or persons as it may deem proper to make such repairs. The City will charge the Contractor the cost thereby incurred. Nothing herein provided shall limit the liability of the Contractor or Surety to the City for non-performance of the Contractor's obligations at any time.

34.02 The Payment and Performance Bonds shall remain in full force and effect through the one year Warranty Period.

ARTICLE 35. PROCEDURE IN CONSTRUCTION

35.01 The Contractor shall start work and carry it on at such point or points and in such order of precedence and at times and seasons as may be determined the Project Engineer, in consultation with the City. The Contractor shall complete the various portions of the work in accordance with the schedule approved by the Project Engineer, in consultation with the City.

35.02 A complete organization, complement of equipment and ample materials shall be on hand before actual work commences. The Contractor shall so arrange his/her organization, plant, equipment and materials so that construction operations will be carried on continuously. The Contractor will not be permitted to reduce the force of workers or remove any equipment from the work if such reduction or removal impairs the progress of the work.

35.03 In the event that the City awards more than one contract to the Contractor, the Contractor shall be required to prosecute the work on each contract simultaneously. The Contractor will be required to maintain a separate and independent organization and staff, labor forces and machinery on each contract in order to complete the work within the time set forth for the respective contracts.

ARTICLE 36. APPRENTICES

36.01 Apprentices shall be permitted to work only under a bonafide apprenticeship program registered either with the State Apprenticeship Council or with the Bureau of Apprenticeship, United States Department of Labor.

ARTICLE 37. CONTROL OF WORK

37.01 The Contractor shall abide by all orders, directions and requirements of the Project Engineer in the performance of the work.

37.02 In the event the Contractor is not personally present at the project site, he/she shall have an English-speaking superintendent present at the site. The superintendent must have proper knowledge of all applicable project requirements and conditions and must have authority to fully represent the Contractor with power to act and to be the recipient of orders and to obey all the instructions of the Project Engineer and/or the City. If proper provision for the carrying out of this stipulation is not made, then the Contractor shall be held responsible for the execution of such orders and instructions which the Project Engineer and/or City may deem necessary to issue to any employee regarding the work. The City or Project Engineer may order the work stopped until a duly authorized representative of the Contractor appears and receives instructions. No claims for damages or for an extension time in which to complete the work because of such delay will be allowed the Contractor.

37.03 In all cases, the Project Engineer shall determine classifications, quantities, quality, acceptability and fitness of the several kinds of work that are to be paid for under the Contract. The Project Engineer and/or City shall interpret the Plans and Specifications and any extra work orders and shall determine all questions in relation to said work and to the construction thereof.

37.04 The Contractor shall not employ any plant, equipment, material, methods or workers to which the City objects. The Contractor shall not remove any plant, materials, equipment or other facilities from the site of the work without the City's permission.

ARTICLE 38. CITY'S CONTROL NOT LIMITED

38.01 The enumeration in this Contract of particular instances in which the opinion, judgment, discretion or determination of the City shall control, and in which work shall be performed to the City’s satisfaction and approval or inspection, shall not imply that only matters similar to those enumerated shall be so governed. Without exception all the work shall be so governed and performed.

ARTICLE 39. AUTHORITY AND DUTIES OF INSPECTORS

39.01 Inspectors shall be authorized to inspect all work done and all materials furnished. Such inspection may extend to all parts of the work and to the preparation or manufacture of the materials to be used. In the case of any dispute arising between the Contractor and an Inspector as to materials furnished, or as to the manner of performing the work, the Inspector shall have the authority to reject material or to suspend the work until the question at issue can be referred to, and decided by, the City.

39.02 The Inspector shall not be authorized to revoke, enlarge, relax or release any requirements of these Specifications nor to approve or accept any of the provisions of the Specifications. The Inspector shall in no case act as a foreman or perform other duties for the Contractor. The Inspector shall not interfere with the management of the work by the Contractor. Any advice, which the Inspector may give the Contractor, shall not be construed as binding the City or the Project Engineer in any way. Such advice will not release the Contractor from the fulfillment of the terms of the Contract.

ARTICLE 40. INSPECTION AND CORRECTION OF WORK

40.01 All material furnished and work done will be inspected by the Project Engineer. The Project Engineer shall condemn any work or materials not in accordance with the Specifications. All condemned work and materials shall be removed and other work and materials furnished in accordance therewith. All materials rejected by the Project Engineer as being unfit for the particular clause in the Specifications to which they refer shall be removed from the site. Removal shall be within twenty-four (24) hours or shorter if the Project Engineer so directs. Should the Contractor refuse to remove the work and materials as ordered, then the Project Engineer may stop the Contractor from proceeding with the work. The City may supply workers and materials to remove the condemned work and materials at the expense of the Contractor.

40.02 Failure on the part of the Project Engineer, or any authorized Inspectors, to detect inferior work or materials, and to condemn the same, shall not be construed to imply an acceptance of such work or materials. Such failure shall not be construed as barring the City, at any subsequent time, from the recovery of such sum of money from the Contractor which may be required to construct or to build anew all portions of the work in which fraud was practiced, improper work executed or improper material furnished and built into the work. The Contractor shall furnish all necessary facilities should it be desirable at any time to make an examination of the work already completed.

40.03 If any work is found defective in any respect, the expense of the examination must be borne by the Contractor. If all work is found satisfactory, the expense of the examination will be paid for as Extra Work.

40.04 If, in the opinion of the City, it is undesirable to reconstruct or correct any portion of the work injured or not performed in accordance with the Contract Documents, the Contractor's compensation hereunder shall be reduced by such amount as may be equitable under all circumstances.

ARTICLE 41. CONTRACTOR'S OBLIGATIONS

41.01 The Contractor shall and will, in good workmanlike manner, do and perform all work and furnish all supplies and material, machinery, equipment, facilities and means, except as herein otherwise expressly specified, necessary or proper to perform and complete all work required by this Contract. All to be accomplished within the time specified; in accordance with the provisions of this Contract and Specifications; in accordance with the Plans and Drawings pertaining to this Contract; in accordance with any and all supplemental Plans and Specifications and in accordance with the directions of the City as given from time to time during the progress of the work. The Contractor shall furnish, erect, maintain and remove such construction plant and such temporary work as may be required. The Contractor alone shall be responsible for the safety, efficiency and adequacy of the plant, appliances and methods. The Contractor shall be responsible for any damage, which may result from their failure or from their improper construction, maintenance or operation. The Contractor shall observe, comply with and be subject to all terms, conditions, requirements and limitations of the Contract and the Specifications. The Contractor shall do, carry on and complete the entire work to the satisfaction of the City.

41.02 The Contractor shall be solely responsible for all the work and shall provide all precautionary measures necessary for preventing injury to persons or damage to property. All injury or damage, of whatever nature, resulting from the work, or resulting to persons, from whatever cause, shall be the responsibility of, and shall be borne and sustained by, the Contractor. The Contractor shall hold the City and Project Engineer, or their agents, harmless and shall defend and indemnify the City and Project Engineer, or their agents, against damages, or claims for damages, due to injury to .persons or to property arising out of the execution of work and for damages to material furnished for the work; for infringement of inventions, patents and patent rights used in doing the work; for damages arising out of the use of any improper material, equipment or labor used in the work and for any act of omission by any subcontractors therein. The Contractor shall bear all losses including, but not limited to, losses sustained on account of the character, quality or quantity of any part or all of the work, or because the nature of the land in or on which the work is done being different from what may have been estimated or indicated, or on account of the weather, elements or other causes, except for acts beyond the reasonable control of the Contractor.

ARTICLE 42. TOILET ACCOMMODATIONS AND DRINKING WATER

42.01 The Contractor shall provide necessary sanitary toilet accommodations and drinking water for the workers. Separate facilities shall be provided for female workers.

ARTICLE 43. SAFETY AND HEALTH REGULATIONS

43.01 These documents, and the joint and several phase of construction hereby contemplated are to be governed at all times by applicable provisions of the Federal law(s), including, but not limited to, the latest amendments of the following:

1. Williams-Steiger Occupational Safety and Health Act of 1970, Public Law 91-956.
2. Part 1910 - Occupational Safety and Health Standards; Chapter XVII of Title 29, Code of Federal Regulations.
3. Part 1926 - Safety and Health Regulations for Construction, Chapter XVII of Title 29, Code of Federal Regulations.

43.02 This project is subject to all of the Safety and Health Regulations (see 29 CFR 1926m as amended) as promulgated by the U. S. Department of Labor on June 24, 1974. The Contractor shall thoroughly familiarize. him/herself with the requirements of these regulations.

ARTICLE 44. OWNERSHIP OF DRAWINGS AND SPECIFICATIONS

44.01 Subsequent to award of the contract, with the exception of the Contractor's executed set, all drawings and specifications are the property of the City. The City shall furnish one (1) paper and one electronic set, in a format acceptable to the City, of the construction drawings and specifications to the Contractor without charge. Additional sets will be furnished upon request at the cost as determined by the City. Such drawings and specifications are not to be used in other work. Any sets in usable condition shall be returned to the City upon request, at the completion or cessation of the work or the termination of the Contract.

ARTICLE 45. THIS SECTION INTENTIONALLY OMITTED

ARTICLE 46. LISTING OF EMPLOYMENT OPENINGS

46.01 This Contract is executed subject to the Governor's Executive Orders No. 3 and No. 17, which are hereby made a part of this agreement. The Governor's Executive Order No. 17 requires, inter alia, that all contractors and subcontractors shall list all employment openings with the office of the Connecticut State Employment Service in the area in which the work is to be performed or where the services are to be rendered. Failure of the Contractor to conform to the requirements of the Governor's Executive Orders No. 3 and No. 17, and any orders, rules, or regulations issued pursuant thereto, shall be a basis for termination of this agreement by the City.

ARTICLE 47. SERVICE OF PROCESS

47.01 The Contractor, if not a resident of the State of Connecticut, or, in the case of a partnership, the partners, if not residents, hereby appoint(s) the Secretary of State of the State of Connecticut, and successors in office, agent for service of process. Such service, as arising out of, or because of, this Contract. Such appointment shall in effect throughout the life of this Contract and for a period of six (6) years thereafter.

ARTICLE 48. CITY OF WATERBURY ORDINANCE CHAPTER 34

48.01 For projects subject to the City's GOOD JOBS ORDINANCE (Code of Ordinances Chapter 34), the provisions thereof are in addition to any requirements of these General Conditions, and to any requirements of other funding sources for the Project, but only to the extent permitted by federal and state law.

ARTICLE 49. WAGE RATES

49.01 NOT USED.

49.02 For Prevailing Wage Rate projects, the Contractor shall furnish to the Project Engineer certified copies of payrolls showing the names of its employees working on the Project, the specific days and hours and number of hours that each of them has spent in doing so, and the amount paid to each person for said work.

ARTICLE 50. SCHEDULE AND POSTING OF MINIMUM WAGE RATES

50.01 Where applicable, the Contractor, and every subcontractor, shall post a legible copy of the Minimum Wage Rates and Classifications included in the Contract Documents. This posting shall be in a prominent and accessible place at the site of the work (See ARTICLE 46). The schedule shall show all determined minimum wage rates for the various classes of laborers and mechanics to be engaged to work on the project. The schedule shall also show all deductions, if any, required by law to be made from wages actually earned by the laborers and mechanics so engaged.

50.02 The rates established by each schedule are the minimum and all employees shall be paid no less than the established rate for each trade or occupation. In the case of a conflict between schedules in anyone trade or occupation, the higher rate listed shall control and such higher rate shall be considered to be the minimum.

50.03 State: Where applicable, the minimum rates of wages and schedule of supplements to be provided for the various trades shall be in accordance with the Prevailing Wage Rate Schedule included herein. The rate of wages and schedule of supplements for any trade not appearing or mentioned in this schedule shall be in accordance with the prevailing rates established for that particular trade by the Connecticut Department of Labor. Minimum wages required to be paid shall include supplements for hospital, surgical, medical or other benefits as determined by Sections 31-53 and 3254 of the General Statutes of the State of Connecticut. The Contractor shall file a Wage Certification Form with the Labor Department of the State of Connecticut prior to beginning work on the site.

50.04 If for any reason and at any time, the Federal Government or the State of Connecticut shall in any way supplement, change or amend the Prevailing Wage Rates Schedule, then the Contractor or subcontractor shall follow such Schedule as supplemented, changed or amended. In no case shall the Contractor or subcontractor be entitled to any additions, compensations or extras because of any supplement, change, amendment or predetermination of the Prevailing Wage Rate Schedule.

50.05 Federal Wage Rates, where applicable, shall be applied in any case where they exceed the State of Connecticut Minimum Wage rates or in any case where a rate has not been established by the State.

ARTICLE 51. COMPUTATION OF WAGES AND OVERTIME COMPENSATION

51.01 The Contractor and each subcontractor shall comply with all applicable Federal, State and local laws or ordinances with respect to the hours worked by laborers and mechanics engaged in work on the project. The Contractor and all subcontractors shall also comply with all applicable Federal, State and local ordinances with respect to compensation for overtime hours worked by laborers and mechanics engaged in work on the project.

ARTICLE 52. WAGE UNDERPAYMENTS AND ADJUSTMENTS

52.01 In addition to any applicable Federal or State regulations, the City may, in the case of underpayment of wages to any worker on the project under this Contract by the Contractor or by any subcontractor, withhold an amount from payments due the Contractor. Said amount to be sufficient to pay such worker the difference between the wages required to be paid the worker under this Contract and the amount actually paid the worker for the total number of hours worked. The City will disburse such amount so withheld by it for, and on behalf of, the Contractor to the employee to whom the amount is due. Such monies withheld pursuant to this article will be in addition to percentages to be retained pursuant to other provisions of the Contract.

ARTICLE 53. CONFORMANCE OF WORK

53.01 The work, during its progress and at its completion, shall conform to the work as shown on the drawings and to the directions given by the Project Engineer from time to time. The work shall be subject to such modifications or additions as the Project Engineer may deem necessary during the execution of the work. In no case will any work be paid for which is performed in excess of such requirements. The work shall also be accomplished in accordance with the Specifications.

ARTICLE 54. DIMENSIONS AND SCHEDULES

54.01 The Contractor will be required to check all dimensions and quantities shown on the drawings or schedules given to him by the Project Engineer. The Contractor shall notify the Project Engineer of all errors therein which he may discover by examining and checking the same. The Contractor shall not take advantage of any error or omission in these specifications, drawings and schedules. The Project Engineer will furnish all instructions should such error or omission be discovered and the Contractor shall carry out such instructions as if originally specified.

ARTICLE 55. PROTECTION FROM STORM

55.01 Should storm warnings be issued, the Contractor shall take every practicable precaution to minimize danger to persons, to the work and to adjacent property. These precautions shall include closing all openings; removing all loose materials, tools and/or equipment from exposed locations; and removing or securing scaffolding and other temporary work.

55.02 The Contractor shall provide measures to prevent stormwater runoff from entering excavation areas.

ARTICLE 56. PROTECTION OF WORK AND MATERIALS

56.01 The Contractor shall assume full responsibility for the protection of the work and materials during the progress of construction, and until final acceptance by the City, against loss or damage by any cause or agency. The Contractor shall, at his own expense, provide efficient means for such protection.

ARTICLE 57. FURTHER SAFEGUARDS

57.01 In case the City or the Project Engineer shall at any time be dissatisfied with the means provided by the Contractor for any aforesaid protection of the work or of any other properties, the City or the Project Engineer may order additional measures and precautions for that purpose. The Contractor, at his own expense, shall immediately comply with such orders and carry them out.

ARTICLE 58. FIRST AID TO INJURED

58.01 The Contractor shall keep on site, ready for immediate use, all articles necessary for giving first aid to injured employees. He shall also provide arrangements for the immediate removal and hospital treatment of any injured employee who may require such treatment.

ARTICLE 59. CONFORMANCE WITH DIRECTIONS

59.01 The Project Engineer may make alterations in the lines, grades, forms, dimensions or materials to be used in the project, or any part thereof, either before or after the commencement of construction. If such alterations diminish the quantity included in any item of work to be done and paid for at a unit price, the Contractor shall have no claim for damages or for anticipated profits on the work thus dispensed with. If the changes increase the quantity included in any such item, such increase shall be paid for at the stipulated unit price.

ARTICLE 60. COMPETENT HELP TO BE EMPLOYED

60.1 The Contractor shall employ an experienced foreman, craftsmen and other workmen competent in the work in which they are to be engaged. All work shall be accomplished by able, skilled and competent personnel. If any person employed on the work by the Contractor shall appear to be incompetent or unreliable in any way, he shall be discharged immediately upon the request of the Project Engineer and shall not be again employed upon the work.

ARTICLE 61. STREETS AND SIDEWALKS TO BE KEPT OPEN

61.01 The Contractor shall keep the street and sidewalks in which he may be working open at all times to pedestrian and vehicular traffic. If, in the opinion of the City or the Project Engineer, the interest of abutters and the public requires it, the Contractor shall bridge or construct plank crossings over trenches at street crossings, roads or private ways. The Contractor shall conduct his work for this project in such manner as the City or the Project Engineer may direct from time to time. No sidewalk shall be obstructed where it is possible to avoid it. No additional payment shall be made to the Contractor for such work.

61.02 The Contractor shall provide all necessary fire crossings at principal intersections or ways usually traveled by fire apparatus. The Contractor shall make provision for the passage of fire apparatus to the work area, including along the line of pipeline installations.

61.03 All work shall be conducted in such a manner as to create minimum interference with existing businesses and commercial establishments. Such establishments shall be allowed to conduct business at all times during the construction.

61.04 The Contractor shall be responsible for taking all steps necessary to minimize dust emanating from the project and for keeping the streets free of the accumulation of sand and other similar materials.

ARTICLE 62. LIGHTS, BARRIERS, FENCES, WATCHMEN AND INDEMNITY

62.01 The Contractor shall put up and maintain such barriers, fences, lighting, and warning lights, danger warning signals and signs as will prevent accidents during the construction. The Contractor will protect the work and will insure the safety of the personnel and of the public at all times and places. The Contractor shall defend, indemnify and save harmless the City its agents in every respect from any injury or damage whatsoever caused by any act, omission or neglect of the Contractor or his subcontractors, or their servants or agents. Such indemnification shall also include any claims arising out of failure to erect and maintain sufficient railing or fencing as required by Section 13a-111 of the Connecticut General Statutes. The fact that the City may retain control of the premises, or that the City, or its agents, may take action to erect or maintain railings or fencing shall not relieve the Contractor's obligations hereunder.

62.02 The Contractor shall furnish, maintain and use all necessary safety devices; follow all such safety practices in the prosecution of the work and shall adopt, follow and maintain such additional safety measures as, in the opinion of the Project Engineer, are conducive to safe operation by the Contractor. The Contractor shall cause his subcontractor(s) to also adopt, follow and maintain these measures. All of this shall be done at the Contractor's or subcontractor's own expense. The City shall have the right to order any or all work suspended where, in the opinion of the City, such work is not being carried on in a safe and proper manner or where persons or property are not being properly protected or safeguarded. Such work shall not be resumed until the City’s requirements have been met and the City or Project Engineer has directed that work be resumed. Any work so suspended shall be at the Contractor's expense.

62.03 In addition to the above, when as is necessary or when required by the City and/or the Project Engineer, the Contractor shall post signs and shall employ watchmen or flagmen for the direction of the traffic at the site and for excluding unauthorized persons from the site at all times. The Contractor will not be paid additional compensation for this work.

62.04 At all times the Contractor shall be responsible for excluding all persons from land within easement areas and all persons not directly connected with the work or authorized by the City and/or the Project Engineer to be within the project limits.

ARTICLE 63. WORK OUTSIDE REGULAR HOURS

63.01 Night work or work on Saturdays, Sundays or legal holidays requiring the presence of the City, Project Engineer or an Inspector will not be permissible except in the case of emergency and then only upon approval of the Project Engineer. Should it be desired or required for by the City or Project Engineer to operate an organization for continuous night work, the lighting, safety and other facilities that are deemed necessary for performing such night work shall be provided by the Contractor. For night work on Saturdays, Sundays or legal holidays, if any be performed, the Contractor will receive no extra payment. Compensation for such work shall be considered as having been included in the prices stipulated for the appropriate items of work as listed in the bid.

ARTICLE 64. BUS LINE INTERFERENCE

64.01 Whenever it may be necessary to interfere with any bus lines, notice shall be given to the corporation or agency owning the same. A reasonable amount of time shall be given to said organization in order to rearrange their schedule(s) as may be necessary.

ARTICLE 65. COLD WEATHER WORK

65.01 The Project Engineer will determine when low temperature conditions are unfavorable for work and may order the work, or any portions of it, suspended whenever, in his opinion, the conditions are not such as will insure first class work.

65.02 All methods and materials used in the performance and for the protection of the work in cold weather shall be subject to the approval of the Project Engineer. The Contractor shall take the necessary precautions to protect the work from damage and to remove ice and frost from materials. The removal shall include all necessary heating and the additional removal of any resultant water. The Contractor shall also supply any required sand and/or coarse aggregate required to prevent slipping on ice.

65.03 The Contractor shall be responsible for maintaining the project roads from the time of contract signing until final project acceptance by the City. This responsibility will include snow and ice removal, road sanding and mechanical sweeping, and roadway patching with materials approved by the Project Engineer.

65.04 The Contractor shall not continue road excavation after bituminous concrete plants have shut down for the winter. At that time, the Contractor shall request a "winter shutdown". The Contractor shall receive no extra payment for any labor, apparatus, tools or materials necessary to comply with the above requirements, but compensation shall be construed items of work as listed in the bid proposal/form.

ARTICLE 66. BLASTING AND EXPLOSIVES

66.01 No blasting shall be allowed without the Contractor's securing of a permit and permission from the office of the Waterbury Fire Marshall. The Marshall's office is located in the Waterbury City Hall, Telephone (203) 597- 3452. The Marshall's office must be advised between 7:00 AM and 10:30 AM of each day's blasting schedule.

66.02 Explosives for blasting shall be stored, handled and used in accordance with the laws, ordinances and regulations of the State of Connecticut; with all local regulations and with such other additional regulations as the Project Engineer may require. Blasting shall be conducted so as not to endanger persons or property. The Contractor shall be responsible for, and shall make good any damages of whatever nature caused by blasting or accidental explosions.

66.03 The Contractor shall also adhere to any additional conditions imposed by the Fire Marshall's office. Additionally, the Contractor shall have a pre-blast survey conducted of the adjacent area(s) at no cost to the City.

66.04 Steel or rubber matting shall be used at ALL blast sites where required by the Bureau of Fire Prevention. Any blast or shot involving more than 99 pounds of explosives must be monitored by the use of seismographs. All seismographs are at the expense of the Contractor. Wire and debris must be cleared from all areas.

ARTICLE 67. TUNNELING

67.01 Tunneling will not be permitted without the express written consent of the City.

ARTICLE 68. RESERVED MATERIALS/EXCAVATED MATERIALS

68.01 Materials excavated from trenches and excavations and those used in the construction of the work shall be deposited in such a manner so that they do not endanger persons or the work. Materials shall also be deposited in such a manner that free access may be had at any time to all hydrants and gates near the work. The materials shall be kept trimmed-up so to be of as little inconvenience as possible to public travel or to adjoining tenants. All excavated materials not approved for backfill and/or fill; all surplus material; all rock and all boulders resulting from excavations shall be removed and satisfactorily disposed of off the site by the Contractor at no additional cost to the City.

68.02 Any excavated material not used in the installation of contracted items shall be removed from the site and legally disposed of by the contractor.

ARTICLE 69. OBSTRUCTIONS AND CROSSOVERS

69.01 Whenever any trench or other excavation obstructs pedestrian and/or vehicular traffic in or to any public street, private driveway or property entrance or to private property, the Contractor shall employ such means as may be necessary to maintain pedestrian and vehicular traffic and access. The Contractor shall construct and maintain suitable plank crossings and bridges to carry essential traffic in or. to the street, driveway or property in question as specified or as directed. These crossings shall be maintained for as long as it is not expedient to backfill the excavation or until such time as sufficient, supportive backfill may be placed. No additional payment will be made for this work.

ARTICLE 70. DIRECTIONAL SIGNS AND LIGHTS

70.01 Suitable signs, lights and such required items to direct traffic shall be furnished and maintained by the Contractor. No additional payment shall be made for this work.

ARTICLE 71. MAINTENANCE OF WORKPLACE

71.01 The Contractor must keep streets and premises free from unnecessary obstructions, debris and all other materials. The City or Project Engineer may, at any time, order all equipment, materials and surplus from excavations to be removed from the work area. Debris and all other materials lying outside of the working area shall be promptly removed. Should the Contractor fail to remove such material within 24 hours of notice to remove, the City or Project Engineer may cause any or all of said materials to be removed by others. The cost of this removal shall be deducted from any monies, which may be, or may become, due the Contractor under the Contract. In special cases, the City or Project Engineer may cause such materials to be removed without prior notice.

ARTICLE 72. OPERATIONS AT SEVERAL POINTS

72.01 The Contractor may carry on the work simultaneously at more than on point only if, in the opinion of the City or Project Engineer, such action is acceptable and is necessary to insure completion of the work within the specified time.

72.02 The Contractor‘s Construction Progress Schedule shall be adjusted to provide for work being simultaneously conducted at more than one point (location) at the site or sites.

ARTICLE 73. INTERFERENCE WITH EXISTING STRUCTURES

73.01 Whenever it may be necessary to cross or to interfere with existing culverts, drains, sewers, water pipes or fixtures, guard rails, fences, gas pipes or fixtures or other structures needing special care, due notice shall be given to the City or Project Engineer. Work involving these items shall be done according to the City's or Project Engineer's directions. Whenever required, all objects shall be strengthened to meet any additional stress that the work herein specified may impose upon it. Any damages that may occur shall be thoroughly repaired. If so directed by the City or Project Engineer, the location of any existing work shall be changed to meet the requirements of the proposed work, if necessary, to leave all in good working order. The entire work shall be the responsibility of the Contractor and the work shall be done at no additional expense to the City.

73.02 The Contractor shall be responsible for repairing all broken or damaged mains or utilities, property markers, monitoring wells, and other existing structures to remain, or outside the Limit of Work, during the progress of the Work. The Contractor shall repair and shall be responsible for all damages to existing utilities and structures with no additional expense to the City. The Contractor shall contact the proper utility or authority to correct or make any changes due to utility or other obstructions during the prosecution of the work, but the entire responsibility and expense shall be with the Contractor.

73.03 All damaged items of work or items required to be removed and replaced due to construction shall be replaced or repaired by the Contractor to the complete satisfaction of the City and/or utility at no additional expense to the City.

ARTICLE 74. TURF, TOPSOIL AND OTHER REPLACEMENT ITEMS

74.01 Where the construction runs through cultivated or sodded lands, the Contractor shall stockpile the turf and topsoil separately and replace the same after the excavation is filled. The Contractor shall leave the land as nearly as possible in its original condition. Trees, fences, walls, walks and other items must not be damaged.

ARTICLE 75. MATERIALS

75.01 All materials furnished and used in the completed work shall be new, of best quality, workmanship, and design and shall be recognized as standard in good construction practices. Whenever a specification number or reference is given, the subsequent amendments (if any) shall be included. The standards set forth in the selection of materials and supplies are intended to conform to those standards adopted by the City. Preference in manufacture shall be given to familiarize the Contractor with the requirements of the Project Engineer when the occasion or choice of materials or supplies so demands.

ARTICLE 76. DEFECTIVE MATERIALS

76.01 No materials shall be laid, installed or used which are known to be, or which may be found to be, in any way defective. Notice shall be given to the Project Engineer of any defective or imperfect material. Defective or unfit material found to have been laid, installed or used shall be removed and replaced by the Contractor with unobjectionable material. This removal and replacement shall be made without additional expense to the City.

ARTICLE 77. INSPECTION AND TESTING OF FURNISHED MATERIALS

77.01 Unless herein provided otherwise, all materials furnished by the Contractor are subject to thorough inspections and tests by the Project Engineer. Any materials condemned or rejected by the Project Engineer as not conforming to the specifications may be branded or otherwise marked. Branded or marked material shall be, on demand, at once removed by the Contractor to a satisfactory distance from the site. Removed materials shall not again be brought upon or near to the work.

ARTICLE 78. SAMPLES AND ORDERING LISTS

78.01 Unless herein provided otherwise, the Contractor shall submit samples of the various materials used on the contract as required by the specifications for testing purposes. All ordering lists shall be submitted by the Contractor to the Project Engineer for approval and must be approved before the ordering of the materials.

ARTICLE 79. SANITARY CONVENIENCES

79.01 Adequate sanitary conveniences, properly secluded from public observation, for the use of workmen on the premises shall be provided and maintained by the Contractor in accordance with the requirements of local and State health authorities. These conveniences shall be maintained in such manner and at such points as shall be approved and their use shall be strictly enforced. Sanitary waste shall be treated and disposed of in a manner satisfactory to, and as directed by, the City and/or the local and State health authorities. Under no circumstances shall sanitary waste be allowed to flow on the surface of the ground or in the work area.

79.02 The cost of sanitary conveniences and the maintenance of same will not be paid for separately, but compensation will be considered to be included in the prices stipulated for the items of work as listed in the bid form.

ARTICLE 80. FINISHING AND CLEANING UP

80.01 In completing any backfilling operation, the Contractor shall replace all surface material to the satisfaction of the City. The Contractor shall then immediately remove all surplus material, all tools, and other property belonging to him. The Contractor shall leave the entire street or surrounding area free and clean, in good order and at no additional expense to the City. Backfilling and removal of surplus materials shall follow closely upon the completion of the work. The Contractor shall exercise special care in keeping rights-of-way and private and public lands, upon which work is being performed, clean and free of debris at all times. The Contractor will remove tools and other property belonging to him when they are not being used.

80.02 In case the Contractor shall fail or neglect to promptly remove all surplus materials, tools and other incidentals after backfilling, or shall neglect to do required paving promptly, the City or Project Engineer may, after 24 hours' notice, cause the work to be done and the cost thereof shall be deducted from any monies then or thereafter due the Contractor.

ARTICLE 81. RIGHTS OF ACCESS

81.01 Nothing herein contained or shown on the drawings shall be construed as giving the Contractor exclusive occupancy of the work area involved. The City or any other Contractor employed by the City, the various utility companies, contractors or sub-contractors employed by Federal, state or local government agencies involved in the general project or upon public rights-of-way, may enter upon or cross the area of work or occupy portions of it as directed or permitted. Contractors employed by the City include Jacobs, operator of the Water Pollution Control Facility; Synagro, operator of the sewage sludge incinerator; and HyAxiom, operator of the on-site fuel cell. When the territory of one contract is the convenient means of access to the other, each contractor shall arrange his work in such manner as to permit such access and to prevent unnecessary delay in the work as a whole. Said access rights shall also include all Federal and state agencies and their representatives that have an interest in said project.

ARTICLE 82. WORK BY OTHERS

82.01 The City reserves the right to do any other work which may connect with, or become a part of, or be adjacent to the work embraced by this Contract, at any time, by contract work or otherwise. The Contractor shall not interfere with, nor obstruct in any way, the work of such other persons as the City may employ. The Contractor shall not interfere with, nor obstruct in any way, the work of Jacobs, operator of the Water Pollution Control Facility; Synagro, operator of the sewage sludge incinerator; or HyAxiom, operator of the on-site fuel cell. The Contractor shall execute his own work in such a manner as to aid in the execution of work by others as may be required. All excavations and backfilling operations performed by this Contractor shall be coordinated with parties mentioned above.

ARTICLE 83. WORK WITHIN THE LIMITS OF PRIVATE PROPERTY

83.01 Particular attention is hereby directed to the fact that some of the work included under this Contract may have to be done within the limits of properties that are publicly or privately owned. The City, where necessary has, or will have, secured the necessary easements to these properties for construction purposes. The Contractor will be permitted to utilize the areas of the City's easements, subject to all of the conditions and requirements as they may affect the Contractor's operations. The Contractor shall conduct his operations and activities in the performance of the work with all such conditions and requirements as may be imposed by the City or Project Engineer.

83.02 All means and rights of ingress and egress to the work areas and all other areas required for work space, in addition to the City's easements, shall be the entire responsibility of the Contractor, All costs in connection therewith shall be considered to be included in the prices stipulated for the appropriate items of work as listed in the bid form.

83.03 The Contractor shall neither use nor occupy public or private lands outside the limits of the City's easements and rights-of-way unless written permission from the owner of the public or private lands have first been obtained. Copies of the written agreements shall be submitted to the Project Engineer prior to entering upon such lands. The Contractor shall be responsible for cooperating with, and for coordinating the prosecution of, the work of this Contract with the public and private property owner. This includes the responsibility for cooperating with, and for coordinating the prosecution of, the work of this Contract with Jacobs, operator of the Water Pollution Control Facility; Synagro, operator of the sewage sludge incinerator; and HyAxiom, operator of the on-site fuel cell. Any abuse to the lands of the public and private property owner shall be immediately corrected by the Contractor, at the Contractor's expense, to the complete satisfaction of the property owner. The Contractor shall take such pre-cautionary measure, as required by the City, to prevent further nuisances, interference or inconvenience to abut-ting property owners.

83.04 It shall be the Contractor's full responsibility to be familiar with the limitations imposed upon the work of construction within the various properties of public or private ownership and rights-of-way by existing occupancy or use. The Contractor will be required to make every effort to fully and satisfactorily protect trees, shrubs, lawns, gardens, fences, walks, driveways, structures and all and any other appurtenances of the property owners.

83.05 The Contractor shall provide adequate access to all walks, driveways, yards or structures: shall protect all work by the erection or placement of safety guards or barriers, lights and such other incidentals; and where required, shall construct temporary plank crossings or timbers to permit full use of private facilities at all times. All of these actions are to be performed at no additional expense to the City. All other applicable provisions for control of work within the areas of public travel set forth elsewhere herein shall also apply to work within the limits of private ownership.

83.06 The Contractor shall cooperate with the public and private property owners and shall also contact the City and Project Engineer for additional information regarding the requested (or required) length of time needed as a notice to be given to the public or private property owner before the Contractor enters their property to start the construction. In some cases, a certain time to start the work and a certain limited length of time may be required to complete the work on public and private property owners. Furthermore the contactor may be required to shutdown construction operations as necessary to prevent undo interference with the operation of private and public business within the project area.

83.07 Before proceeding with construction operations, the Contractor shall provide suitable and substantial gates or other approved forms of closing gap devices in every fence within the limits of the owner's easements through which the Contractor intends to move or pass equipment and materials. It is the responsibility of the Contractor to negotiate with the owner of each fence all of that owner's requirements, in addition to those specified above. It shall also be the responsibility of the Contractor to comply with all requirements as specified herein and as agreed to with the owner's in a manner satisfactory to the owner.

83.08 No separate payment will be made for the requirements specified under "WORK WITHIN THE LIMITS OF PRIVATE PROPERTY" and all cost in conjunction therewith shall be included in the prices stipulated for the appropriate items of work as listed in the bid form.

ARTICLE 84. LOADING

84.01 No part of the structures involved in this Contract shall be loaded during construction with a load greater than that calculated for the safety of the structure. Should any accidents or damage occur through any violation of this requirement, the Contractor will be held responsible. If necessary, the Contractor shall request, in writing, the allowable loading from the Project Engineer.

ARTICLE 85. COMPLETION OF WORK

85.01 In addition to the specified or described portions, all other work and all materials, equipment and labor of whatever description which are necessary or required to complete the work, or for carrying out the full intent of the drawings and specifications, as interpreted by the Project Engineer, shall be provided by the Contractor. Payment therefore shall be considered as having been included in the prices stipulated for the appropriate items of work as listed in the bid form.

ARTICLE 86. DUST AND SPILLAGE CONTROL

86.01 The Contractor shall exercise every precaution to prevent and to control dust arising out of all construction operations from becoming a nuisance. Water shall be provided and applied as required or as ordered by the Project Engineer for allaying dust conditions. Pavements adjoining excavations shall be kept swept and/or washed clean of excess excavated material wherever and whenever directed. Earth piles adjacent to excavations, earth stockpiles and surfaces of refilled excavations shall be kept moist at all times as directed. No extra payment will be made for providing the dust control measures and for conforming to the requirements specified above. Compensation therefor shall be considered included in the prices stipulated for the appropriate items of work as listed in the bid form.

ARTICLE 87. CARE OF THE WORK

87.01 The Contractor shall be responsible for all damages to persons or property that occur as a result of the Contractor's fault or negligence concerning the prosecution of the work. The Contractor shall also be responsible for the proper care and protection of all material delivered and of all work performed until completion and final acceptance, whether or not the same has been covered by partial payments authorized by the Project Engineer.

ARTICLE 88. EMERGENCY WORK

88.01 The Contractor shall file, with the City Engineer and the Project Engineer, if any, the name and telephone number of a person authorized by him who may be contacted regarding emergency work at the job site that may be required during non-working hours for reasons of public safety. This person shall be readily available and shall have full Authority to deal with any emergency that may occur.

ARTICLE 89. FIRE PREVENTION AND PROTECTION

89.01. All Federal laws (Occupational Safety and Health Act) and all state and municipal rules and regulations with respect to fire prevention, fire-resistant construction and fire protection shall be strictly adhered to by the Contractor. All work and facilities necessary therefore shall be provided and maintained by the Contractor in an approved manner.

89.02. All fire protection equipment (as per 89.01 above) shall be provided by the Contractor for the protection of the contract work including temporary work and adjacent property. Personnel experienced in the operation of the fire protection equipment and apparatus shall be available whenever work is in progress and at such other times as may be necessary for the safety of the public and of the work.

89.03. Open fires will not be permitted.

ARTICLE 90. PLANIMETER

90.01 For estimating quantities, where the computations of areas by analytic and geometric methods would be comparatively laborious, it is stipulated and agreed that the planimeter shall be considered an instrument of precision adapted to the measurement of such areas, as utilized by an engineer.

ARTICLE 91. SUPERINTENDENCE

91.01 During the entire duration of the project, the Contractor shall employ a competent superintendent in personal charge of the work. The superintendent shall be present during all phases of construction and shall have full authority to act for the Contractor. The superintendent shall be continued in this capacity full time for this project unless (1) the person ceases to be on the Contractor's payroll or (2) the person proves to be unacceptable to the City or Project Engineer. Instructions given to the superintendent and/or supervisory subordinates shall be considered as given to the Contractor. A chain-of-command listing shall be submitted by the Contractor to the City and Project Engineer and shall be adhered to in the temporary absence of the superintendent.

ARTICLE 92. CONTRACT ADMINISTRATION COSTS - OUTSIDE REGULAR HOURS

92.01 The working schedule shall be confined to a five (5) day week ending on Friday. The working day shall be any eight-hour period beginning no earlier than 7:00 AM and ending no later than 4:00 PM. Whenever the Contractor elects to perform work on Saturdays, Sundays or legal holidays observed by the City or to work in excess of the normal working hours stated above, the Contractor shall pay to the City the extra cost incurred by the City due to the increased cost of contract administration. Payment shall include all cost of inspection and administration for such Saturday, Sunday or legal holiday work or for work in excess of the normal working day, which the City is obligated to incur and for the extra expense involved in overtime work resulting from the performance of work on these days.

92.02 No work outside regular hours or overtime work shall be planned or executed without the approval of the City.

ARTICLE 93. DAILY REPORTS

93.01 The Contractor shall submit daily activity reports on an approved form for the duration of the project. The report shall indicate all personnel currently employed on the work, including each trade and every subcontractor; all equipment and whether that equipment was idle for the particular day; a general description of all work accomplished and any authorized extra work (time and material reports shall be submitted on separate forms).

ARTICLE 94. MATERIAL AND WORKMANSHIP

94.01 All materials and workmanship incorporated in the work covered by this Contract are to be of the highest grade of their respective kinds for the purpose intended. The Contractor shall furnish to the Project Engineer for approval the name of the manufacturer of machinery and mechanical or other equipment that the Contractor contemplates incorporating in the project together with their respective performance capacities and other pertinent information.

94.02 When required by the Specifications, or when called for by the City or Project Engineer, the Contractor shall furnish the required information for approval of all material that the Contractor contemplates incorporating in the work. Samples of material shall be submitted for approval to the Project Engineer when and as directed. Machinery, equipment and material installed or used without approval shall be at the risk of subsequent rejection.

ARTICLE 95. TEMPORARY WATER SUPPLY

95.01 In the event temporary water supply work is required, it shall be provided in accordance with the requirements of the Waterbury Water Bureau and all local and state health authorities. The Contractor shall provide and maintain facilities for an adequate supply of water suitable for use for construction purposes and for domestic use as required for the work of this Contract. The cost of all work, materials, equipment, appurtenances and accessories necessary for providing supplies of water at the site, including the cost of all water consumed, shall be borne by the Contractor.

95.02 Upon completion to the work of this Contract, and before final acceptance, the Contractor shall remove all temporary piping and appurtenant work used for the temporary water supply.

ARTICLE 96. FITTING AND COORDINATION OF WORK

96.01 The Contractor shall be responsible for the proper fitting of all work and for the coordination of operations of all trades, subcontractors or material suppliers engaged in the work. The Contractor shall be prepared to guarantee to each of his subcontractors the dimensions for which they may require for the fitting of their work to all surrounding work. The Contractor shall do, or shall cause his agents to do, all cutting, fitting, adjusting and patching necessary to make the several parts of the work come together satisfactorily and properly and to fit the work to receive, or to be received by, the work of other contractors.

ARTICLE 97. ARCHAEOLOGICAL FINDS

97.01 During the life of this Contract, in the event that any articles such as "charcoal", "bone", "shell", "cultural objects", "fire-cracked stones", "stone flaking material." or any other such related items of historical significance are discovered on the project, the Contractor is required to notify:

(1) The City
(2) Project Engineer or Inspector

ARTICLE 98. EXCAVATIONS NEAR UNDERGROUND UTILITIES

98.01 In compliance with Public Act No. 77-350, "An Act Concerning Excavations Near Underground Utility Facilities," of the State of Connecticut, the Contractor shall not start any excavation and/or blasting of rock activity without first having ascertained the location of all such utilities in the area. The Contractor shall notify the Connecticut Underground Utilities Protection Authority (CUUPA) "CALL BEFORE YOU DIG" (Toll Free 1-800-922-4455) at least two (2) full days in advance (excluding Saturday, Sunday and legal holidays), but no more than thirty (30) days before starting any such work. Such notice shall include the name, address and telephone number of the persons/agency performing the work, the date, location and type of excavation.

98.02 The CUUPA should immediately transmit such information to the utility companies whose facilities may be affected. Utility companies receiving notice should mark-up the locations of their facilities on the work site. If they have no facilities in the area, they shall so inform the Contractor. If the Contractor does not receive any information or marked-up locations on the work sites, the Contractor shall contact CUUPA again to verify that the utility companies have responded to the initial call. Under no circumstances will the Contractor be allowed to start any excavation and/or blasting work prior to obtaining all necessary information regarding the location of underground utilities at the site. It is the Contractor's responsibility to have all utilities marked on the work sites prior to starting the work.

ARTICLE 99. WATER QUALITY OF WELLS

99.01 The Contractor shall perform all tests required by the State Health Department on all water supply wells and reservoirs where directed by the City or Project Engineer before and after construction. All labor, materials and testing shall be paid by the Contractor at no cost to the City.

ARTICLE 100. WORK IN STATE HIGHWAYS

100.01 If any of the work under this Contract is in a state highway the Contractor shall obtain all required permits at his own expense. The Contractor shall perform the work in accordance with the terms and conditions stipulated by the Connecticut Department of Transportation (CONNDOT) and/or as required by CONNDOT inspectors. The Contractor must provide such bonds, security and insurance as may be required to obtain such permits.

100.02 In the event the City, or the City and the Contractor jointly, are required to obtain any permits, including detour permits, the Contractor shall be familiar with the conditions of the permits and shall be held responsible for compliance with all the requirements of the permits and all specifications attached thereto, as if the permits were held solely by the Contractor.

100.03 Whenever State inspectors, flagmen or other costs are incurred as a condition to obtaining permits, the Contractor shall be responsible for payment of these costs with no reimbursement from the City.

100.04 The Contractor shall conform to all ConnDOT requirements for materials and construction methods for all work within state highways. Sheeting or an adequate trench box may be required in all trenching operations to confine trench widths and to protect State facilities. Additional pavement replacement may be required to properly restore the roadway surface.

100.05 The cost of all labor, materials and equipment necessary to conform to CONNDOT requirements for work in, or adjacent to, state highways, including work not specifically stated in the Contract Plans and Specifications, shall be the sole responsibility of the Contractor and shall not be reimbursed by the City. Therefore, the Contractor is informed to evaluate all CONNDOT requirements for the project prior to submitting the Bid for the project and to include these costs in his bid prices.

ARTICLE 101. EXISTING INSPECTION REPORTS

101.01 Any existing inspection reports concerning the project which have been prepared by or for the City or Project Engineer will be made available for the Contractor's information.

ARTICLE 102. TEST REPORTS; CERTIFICATES OF COMPLIANCE AND SHIPPING LISTS

102.01 In addition to other requirements specified herein, the Contractor shall furnish to the Project Engineer the material manufacturer's notarized test reports and methods of testing by an approved independent laboratory in order to show compliance of all materials furnished with all specification requirements, the reports shall also contain manufacturer's notarized certificates of conformance stating that all materials furnished under these Specifications conform with all specification requirements; that each shipment of materials shall be accompanied by the manufacturer's notarized certificate of conformance and that a shipping list itemizing the amounts of each shipment shall accompany each shipment. All testing of materials furnished under these Specifications shall be provided by the Contractor at no additional expense to the City.

ARTICLE 103. CLEANING FINISHED WORK

103.01 After the work is completed, the sewers, manholes and structures shall be carefully cleaned free of dirt, broken masonry, mortar, construction and other debris and shall be left in first class condition, ready for use. All temporary or excess material shall be disposed of and the work left broom-clean to the satisfaction of the Project Engineer.

ARTICLE 104. THIS SECTION INTENTIONALLY OMITTED

ARTICLE 105. COMPLIANCE TO ACTS AND EXECUTIVE ORDERS

105.01 If this Contract is Federally assisted and the Contractor must comply with all applicable statutes, acts, executive orders and regulations, including without limitation:

(a) **TITLE VI, CIVIL RIGHTS ACT OF 1964** Provides that no person in the United States shall on the grounds of race, color or national origin be excluded from participation in, be denied the benefits of, or be subjected to discrimination under any program or activity, receiving Federal financial assistance.

(b) **SECTION 3, HUD ACT OF 1968** Provides that, to the greatest extent feasible, opportunities for training and employment shall be given to lower income residents of HUD-assisted project areas, and that contracts for work in connection with such projects be awarded to business concerns which are located in, or are owned in substantial part by persons residing in the area of the project.

(c) **LABOR STANDARDS** Compliance with Davis Bacon Act, as amended (40 U.S.C. 267a-5) Contract Work Hours and Safety Standards Act (40 U.S.C. 327-333) 13.0.

ARTICLE 106. SEMI-FINAL INSPECTION/SUBSTANTIAL COMPLETION

106.01 Upon completion of all the work as required by the plans and specification, the Contractor shall submit an Affidavit of Substantial Completion and shall request a semi-final inspection of the work by the Project Engineer. Based on the semi-final inspection, the Project Engineer will provide the Contractor with a list of items of work which have not been completed by the Contractor in accordance with the plans and specifications ("punchlist"). The Contractor shall complete all work and/or correct all deficiencies identified during the semi-final inspection.

ARTICLE 107. FINAL INSPECTION

107.01 Upon completion of the steps identified in Article 106 above, the Contractor shall submit to the Project Engineer documentation showing that all punchlist items have been completed and all deficiencies identified during the semi-final inspection have been corrected and shall request a final inspection of the work.

ARTICLE 108. SEMI-FINAL PAYMENT APPLICATION

108.01 Upon satisfactory completion of the final inspection, the Contractor shall prepare a SEMI-FINAL PAYMENT APPLICATION showing the final estimate of quantities, as confirmed by the Project Engineer. Should the final estimate of quantities show either an increase or decrease from the approximate estimate of quantities, then such variations will be computed at the unit prices bid and reflected in the SEMI-FINAL PAYMENT APPLICATION by adding or deducting said amounts from the gross sum bid. In addition, if use of the Owner Controlled Contingency Allowance is required for this SEMI-FINAL PAYMENT APPLICATION, it shall be processed prior to execution of the SEMI-FINAL PAYMENT APPLICATION. All certificates of payments and estimates, upon which progress payments may have been made being merely estimates, shall be subject to correction in the SEMI-FINAL PAYMENT APPLICATION.

108.02 The SEMI-FINAL PAYMENT APPLICATION shall be signed by the Contractor and by the Project Engineer.

ARTICLE 109. FINAL COMPLETION/FINAL ACCEPTANCE OF PROJECT

109.01 FINAL COMPLETION of the Project shall occur when:

All Project work has been completed to the satisfaction of the City and the following have been submitted to the satisfaction of the Project Engineer and the City:

i. All documentation and supporting information required by the Contract Documents; including but not limited to: Final Waiver of Lien from each Subcontractor, supplier and the Contractor.

ii. All reports, forms, or certifications (including material certifications) required on any State or Federal funded Projects;

iii. Warranties, guarantees, final operation and maintenance manuals, and documentation to the effect that training and start-up support required by the Contract have been completed;

iv. As-built documents if required for the Project.

109.02 Upon satisfactory completion of the steps provided in 109.01 above, FINAL ACCEPTANCE of the Project by the City shall be evidenced by issuance of a written CERTIFICATE OF FINAL COMPLETION including a statement therein establishing the date of Final Completion.

ARTICLE 110. FINAL PAYMENT APPLICATION

110.01 The FINAL PAYMENT APPLICATION shall state the final Contract amount, any liquidated damage amounts, all City payments to Contractor, retainage to be released to Contractor, and final amount of any holdback(s) by the City, plus any other credits owed by Contractor to the City, including any credits for any unused allowances.

110.02 The FINAL PAYMENT APPLICATION shall be signed by the Contractor and by the Project Engineer.

ARTICLE 111. ACCEPTANCE OF FINAL PAYMENT

111.01 The acceptance by the Contractor, or by anyone claiming by or through the Contractor, of FINAL PAYMENT shall constitute and operate as a release for the City from any and all claims of any liability to the Contractor for anything, theretofore done or furnished for or relating to or arising out of the Work done thereunder, and for any prior act of neglect, default on the part of the City or any of its officers, agents, or employees unless the Contactor serves a detailed and verified statement of claim upon the City not later than seven (7) calendar days after depositing or cashing such FINAL PAYMENT. Such statement shall specify the items claimed. Should the Contractor refuse to accept the FINAL PAYMENT as tendered, it shall constitute a waiver of any right of interest thereon.

END OF SECTION

SPECIAL CONDITIONS

INDEX TO SPECIAL CONDITIONS

ARTICLE	PAGE
ARTICLE 1. SPECIAL NOTE	SC-3
ARTICLE 2. PERMITS	SC-3
ARTICLE 3. ADDENDUM TO GENERAL CONDITIONS 11 and 95	SC-4
ARTICLE 4. ADDENDUM TO GENERAL CONDITION 31	SC-4
ARTICLE 5. WINTER EROSION CONTROL MEASURES	SC-4
ARTICLE 6. ADJUSTMENT OF EXISTING UTILITIES	SC-4
ARTICLE 7. MOBILIZATION AND DEMOBILIZATION	SC-4
ARTICLE 8. CONSTRUCTION STAKE OUT	SC-4
ARTICLE 9. AS-BUILT IMPROVEMENT DRAWINGS	SC-5
ARTICLE 10. DEWATERING AND WATER CONTROL	SC-5
ARTICLE 11. SITE RESTORATION	SC-5
ARTICLE 12. CITY NOTIFICATION – BACKFILLING	SC-5
ARTICLE 13. PUBLIC USE OF EXISTING PUBLIC FACILITIES	SC-6
ARTICLE 14. INTENT OF DRAWINGS	SC-6
ARTICLE 15. ACCESS TO PROPERTY	SC-6
ARTICLE 16. ADDENDUM TO GENERAL CONDITION 2	SC-6
ARTICLE 17. ADDENDUM TO GENERAL CONDITION 10	SC-6
ARTICLE 18. ADDENDUM TO GENERAL CONDITIONS ARTICLE 92	SC-7
ARTICLE 19. OWNER CONTROLLED CONTINGENCY ALLOWANCE	SC-7

ARTICLE 20. CHANGES TO THE WORK SC-7

ARTICLE 21. ADDENDUM TO GENERAL CONDITION ARTICLE 2 SC-14

ARTICLE 22. PHOTOGRAPHIC AND VIDEO DOCUMENTATION SC-15

ARTICLE 23. LAYDOWN AREAS SC-16

ARTICLE 24. ADDENDUM TO GENERAL CONDITION ARTICLE 36 SC-17

ARTICLE 25. ADDENDUM TO GENERAL CONDITION ARTICLE 45 SC-17

ARTICLE 26. ADDENDUM TO GENERAL CONDITION ARTICLE 64 SC-17

ARTICLE 27. ADDENDUM TO GENERAL CONDITION ARTICLE 66 SC-17

ARTICLE 28. ADDENDUM TO GENERAL CONDITION ARTICLE 67 SC-17

ARTICLE 29. ADDENDUM TO GENERAL CONDITION ARTICLE 90 SC-17

ARTICLE 30. ADDENDUM TO GENERAL CONDITION ARTICLE 99 SC-17

ARTICLE 31. ADDENDUM TO GENERAL CONDITION ARTICLE 100 SC-17

ARTICLE 32. UNIFORMED POLICE ALLOWANCE SC-17

ARTICLE 33. ELECTRIC FEE UTILITY ALLOWANCE SC-18

SPECIAL CONDITIONS

ARTICLE 1. SPECIAL NOTE

These Special Conditions shall be subject to all requirements of the Contract, amend or supplement the General Conditions, and modify all Contract Documents which follow them numerically, as set forth in Section 1.2 of the Contract. These Special Conditions amend or supplement the General Conditions and other provisions of the Proposal Documents and shall be subject to all requirements of the Contract. The terms used in these Special Conditions which are defined in the Contract or General Conditions have the meanings assigned to them in said documents. All provisions of the General Conditions which are not so amended or supplemented remain in full force and effect.

This section applies equally and specifically to all contractors supplying labor and/or equipment and/or materials for this Project and all drawings, specifications and general provisions of the Contract, including General Conditions, apply to these Special Conditions. Where items of the Proposal Documents or General Conditions are repeated, it is intended to call particular attention to or qualify them; it is not intended that any other parts of the Proposal Documents or General Conditions shall be assumed to be omitted if not repeated herein.

Unless expressly provided for otherwise, the costs associated with all work under the Special Conditions shall be included in Contractor's Total Price Proposal.

The Contractor shall coordinate all work activities with the Jacobs Project Engineer. The Contractor shall maintain access to all public right aways throughout the duration of the construction contract.

For access to private property the Contractor shall notify the City and Project Engineer of specific date, and approximate length of time needed to perform work activity. Coordination of access shall be performed by the City and the Project Engineer. No attempt shall be made by the Contractor to access or make contact with the property owner without consent from the City and/or the Project Engineer. Access will be limited to necessary work activities required by the Contract Documents. Contractor will implement dust control (if applicable), noise mitigation, and traffic/pedestrian control. Any disturbed surfaces will be restored to equal or better condition within ten (10) days following completion of the Work. Work areas will be secured and signed for public safety.

ARTICLE 2. PERMITS

The Contractor shall secure and obtain all permits and all licenses required, or necessary, or prudent for the performance of the Contractor’s obligations under this Contract and for the City’s occupancy, use, and operation of the Project.

ARTICLE 3. ADDENDUM TO GENERAL CONDITIONS 11 and 95

Reference is made to General Condition Articles 11 – Temporary Utilities, and 95 – Temporary Water Supply. The Contractor shall be responsible for determining and supplying at no cost to the City all temporary utilities needed to complete the work. Unless otherwise provided for in the Proposal Documents, all necessary temporary utilities shall be installed at the start of the Project at a location acceptable to the Project Engineer.

ARTICLE 4. ADDENDUM TO GENERAL CONDITION 31

Reference is made to General Condition Article 31 – Use of Premises and Removal of Debris. During the progress of the work, the Contractor shall keep the construction areas in a neat condition, free from accumulations of waste materials and rubbish. Lunch papers, bottles, lumber cut-offs, drinking cups and like rubbish shall be removed from the site daily. No alcoholic beverages will be permitted at the construction site(s).

On or before the completion of the work and before acceptance and final payment shall be made, the Contractor shall clean and remove from the site and adjacent property all surplus and discarded materials, rubbish, and temporary structures and restore, in an acceptable manner, all property and leave the whole area in a neat and presentable condition.

In addition, the Contractor shall dispose of sewer cleaning debris at the City's Wastewater Treatment Plant ("WWTP") following the guidelines outlined in Appendix B Septage Receiving Program Information Package. Debris disposal costs shall be the responsibility of the City. The Successful Proposer shall be responsible for the transportation of the debris to the disposal facility. The Successful Proposer shall segregate all solid waste including roots, grease, rags, sand, rocks, etc. from liquid collected during cleaning. These materials shall be transported directly to WWTP. The wastewater collected during cleaning shall be disposed of in a sanitary sewer manhole (designated by the City).

ARTICLE 5. WINTER EROSION CONTROL MEASURES

Seeding and plantings shall be performed March 15 to June 15 or August 15 to October 15. The Contractor shall submit a winter erosion control plan to the Project Engineer for approval prior to the start of construction. This plan shall indicate, in sufficient detail, the methods and materials which shall be used during the winter months to prevent erosion, scour and general deterioration of the Project and adjacent flora and fauna.

ARTICLE 6. ADJUSTMENT OF EXISTING UTILITIES

The Contractor shall raise or lower as necessary the top of all utility valve boxes, cleanouts, traffic boxes, and any other utility access structures within the work area to match the finished grade. No extra compensation will be allowed for adjustment of the existing utilities.

ARTICLE 7. MOBILIZATION AND DEMOBILIZATION

The costs of Mobilization and Demobilization for the project shall be included in the within Contractor's Total Price Proposal. No separate payment shall be made for Mobilization or Demobilization.

ARTICLE 8. CONSTRUCTION STAKE OUT

The Contractor will be responsible for the actual construction stakeout and for locating utility and other easements to which the properties are subject. There shall be no extra compensation for Construction Survey. The work shall be included within Contractor's Total Price Proposal.

ARTICLE 9. AS-BUILT IMPROVEMENT DRAWINGS

Prior to Final Completion of the Work, the contractor shall provide As-Built Improvement Drawings of all above ground and below ground improvements within the Limit of work. Said drawings shall be signed and sealed by a State of Connecticut Licensed Engineer. The contractor shall provide one mylar copy and one electronic AutoCAD copy of the As-Built Improvement Location Drawings.

All AutoCAD submissions to City shall be in the version required by the Project Engineer.

ARTICLE 10. DEWATERING AND WATER CONTROL

The Contractor shall be responsible for all dewatering required to complete the Contract including, but not limited to, pumping, well points, trenches, excavations, water control structures and cofferdams, which may be required to properly complete this Project. Particular attention is called for regarding fluctuation in water levels due to precipitation. No extra compensation will be allowed due to water level fluctuation.

ARTICLE 11. SITE RESTORATION

The Contractor will blend the new work into the existing ground surface and replace any adjacent disturbed materials that may have been damaged or made irregular due to construction and/or new installations.

ARTICLE 12. CITY NOTIFICATION – BACKFILLING

Before backfilling any excavated area and after an improvement has been installed the Contractor shall notify the City when a backfill operation is to occur. A City representative or Project Engineer will make one observation for each excavated area.

ARTICLE 13. PUBLIC USE OF EXISTING PUBLIC FACILITIES

The Contractor shall limit his work area to the site of the construction and its immediate vicinity. All work shall be conducted with the public rights-of-way, within City sewer easements located on private property, or on private property where specifically allowed by the City and property owner(s). No equipment or storage is allowed outside of the designated construction area, which is identified in the Contract Documents, without prior written approval by the Project Engineer.

ARTICLE 14. INTENT OF DRAWINGS

The drawings are intended to show general conformance with project requirements and may not show all elements necessary to meet all applicable codes. Contractor shall remain responsible for ensuring all work is performed in accordance with all local, state, and federal regulations.

ARTICLE 15. ACCESS TO PROPERTY

Throughout the duration of Construction, the Contractor shall coordinate access to all private property, including City easements located on private property, with the Jacobs Project Engineer. The Contractor may not enter upon or cross the area of work or occupy portions of it on private property without express approval from the City and Jacobs Project Engineer.

Where required by the City, Contractor shall also conduct regular coordination meetings with Utilities and Owners and Operators of businesses and other operations to coordinate its work.

ARTICLE 16. ADDENDUM TO GENERAL CONDITION 2

Reference is made to General Condition Article 2 – Construction Progress Schedule. For this project, Contractor shall not be required to provide a Water Control Plan or Environmental Protection Plan as may be outlined or referenced in the General Conditions.

ARTICLE 17. ADDENDUM TO GENERAL CONDITION 10

Reference is made to General Condition Article 10 – Environmental Protection Plan. An Environmental Protection Plan in accordance with General Conditions Article 10 is not required for this Project. Additionally, the Contractor shall be responsible for protecting the Environmental Resources as described in General Condition Article 9.

ARTICLE 18. ADDENDUM TO GENERAL CONDITIONS ARTICLE 92

Reference is made to General Condition Article 92 – Contract Administration Costs – Outside Regular Hours. Compensation to the City for the extra cost incurred when the Contractor elects to perform work in excess of the normal working hours set forth in General Condition Article 92 shall at the rate of $150 per hour and shall be deducted from the amount due the Contractor.

ARTICLE 19. OWNER CONTROLLED CONTINGENCY ALLOWANCE

If an Owner Controlled Contingency Allowance ("OCCA") has been provided in the Contract, it is to provide an account for certain expenditures found necessary by and ordered done by the City. This item shall include any unforeseen work made necessary by changes in the plans or necessitated by site conditions. Work for which payment is included under other items shall not be considered for inclusion under this item.

Use of the OCCA requires the City's advance written authorization. Determination of amounts to be paid for work under this item shall be in accordance with Article 20 of the Special Conditions and at the sole discretion of the City.

Determination of amounts to be paid for work under this Article shall be agreed to in advance by the Contractor and City and shall not exceed amounts established in the OCCA. At project closeout, unused amounts remaining in the allowance shall be credited to the City by Final Change Order (as part of and so documented in Contractor's final payment request).

In no instance shall payments made pursuant to this Article result in an increase in the amount of the Contract Total Compensation or extension of Contract Time. Any increase above the Contract Total Compensation or Contract Time resulting from utilization of this Article must be by a duly authorized and executed Contract amendment in accordance with Section 27 of the Contract.

ARTICLE 20. CHANGES TO THE WORK

The cost and/or payment calculations for changes to the work shall be either on a firm proposal agreed to by the City or based on the provisions set forth herein.

Any changes in the work agreed to by the parties, or as directed by the Project Engineer, shall be evidenced by a Change Order authorized in accordance with Section 27 of the Contract and this Article. In no instance shall payments made pursuant to this Article result in an increase in the Contract Total

Compensation or extension of Contract Time. Any increase above the Contract Total Compensation or Contract Time resulting from utilization of this Article must be by a duly authorized and executed Contract amendment in accordance with Section 27 of the Contract.

A. Differing Site Conditions:

(1) During the progress of the work, if subsurface or latent physical conditions are encountered at the site differing materially from those indicated in the Contract or if unknown physical conditions of an unusual nature, differing materially from those ordinarily encountered and generally recognized as inherent in the work provided for in the Contract, are encountered at the site, the party discovering such conditions shall promptly notify the other party in writing of the specific differing conditions before they are disturbed and the Contractor shall thereafter wait for written instructions from the Project Engineer before proceeding with regard to such conditions.

(2) Upon written notification from the Contractor, the Project Engineer will investigate the conditions to determine if differing conditions exist. The Project Engineer will notify the Contractor of his/her determination whether or not differing conditions exist. If it is determined that the conditions materially differ and cause an increase in the Total Compensation or Contract Time required for performance of any work under the Contract, the City, with the Project Engineer's recommendation, will make an adjustment (excluding anticipated profits) and modify the Contract in writing accordingly. The Contractor will be notified of the Project Engineer's determination whether or not an adjustment of the Contract is warranted.

(3) No use of this Article or of any Contingency Allowance that results in a benefit to the Contractor will be allowed unless the Contractor has provided the required written notice.

(4) No use of this Article or of any Contingency Allowance will be allowed under this clause for any effects caused on unchanged work.

B. Suspensions of Work Ordered by the Project Engineer:

(1) If the performance of all or any portion of the work is suspended or delayed by the Project Engineer in writing for an unreasonable period of time (not originally anticipated, customary, or inherent to the construction industry) and the Contractor believes that additional compensation and/or Contract Time is due as a result of such suspension or delay, the Contractor shall submit to the Project Engineer in writing a request for adjustment within seven (7) calendar days of receipt of the notice to resume work. The request shall set forth the reasons and support for such adjustment.

(2) Upon receipt, the Project Engineer will evaluate the Contractor's request. If the Project Engineer agrees that the cost and/or Contract Time required for the performance of the Contract has increased as a result of such suspension and the suspension was caused by conditions beyond the control of and not the fault of the Contractor, its suppliers, or subcontractors at any approved tier, and not caused by weather, the City, with the Project Engineer's recommendation, will make an adjustment (excluding profit) and modify the Contract in writing accordingly. The Contractor will be notified of the Project Engineer's determination whether or not an adjustment of the Contract is warranted.

(3) No Contract adjustment will be allowed unless the Contractor has submitted the request for adjustment within the time prescribed.

(4) No Contract adjustment will be allowed under this clause to the extent that performance would have been suspended or delayed by any other cause, or for which an adjustment is provided or excluded under any other term or condition of this Contract.

C. Significant Change in the Character of Work:

(1) The Project Engineer reserves the right to make, in writing, at any time during the work, such changes in quantities and such alterations in the work as are necessary to satisfactorily complete the Project. Such changes in quantities and alterations shall not invalidate the Contract nor release the surety, and the Contractor agrees to perform the work as altered.

(2) If the alterations or changes in quantities significantly change the character of the work under the Contract, whether or not changed by any such different quantities or alterations, the cost for changes to the work shall be either on a firm proposal agreed to by the City or as calculated herein, and such costs shall not include loss of anticipated profits. If a cost cannot be agreed upon, then the cost calculation shall be in such amount as the Project Engineer may determine to be fair and equitable.

(3) If the alterations or changes in quantities do not significantly change the character of the work to be performed under the Contract, the cost calculations for the altered work will be at the prices bid.

(4) The term "significant change" shall be construed to apply

when the character of the work as altered differs materially in kind or nature from that involved or included in the original proposed construction.

when an item of work, as defined elsewhere in the Contract, is increased in excess of 125% or decreased below 75% of the original Contract quantity. Any allowance for an increase in quantity shall apply only to that portion in excess of 125% of original Contract item quantity, or in case of a decrease below 75%, to the actual amount of work performed.

D. Extra Work:

Unforeseen work made necessary by the Project Engineer’s changes as previously described, or work that is necessary for completion of the Project, but for which no price is provided in the Contract, shall be done in accordance with the requirements of the specifications and as directed by the Project Engineer. The Project Engineer shall notify the Contractor of the necessity for such extra work, stipulating its character and extent, and shall notify the Contractor as to whether the Project Engineer wants the Contractor to propose a unit price or, instead, a lump sum, for the extra work. Within 5 calendar days of receipt of such notification, the Contractor shall advise the Project Engineer, in writing, of the proposed compensation (as a unit price or lump sum, whichever has been requested by the Project Engineer) that the Contractor requests as compensation for the required extra work. The Contractor's request shall be itemized and reasonably detailed, and shall include all known or

anticipated direct and indirect costs of the work, including but not limited to, the costs of all safety and other equipment, small tools, labor, subcontractor quotes, consumables, field office overhead, home office overhead, insurance, bonding, and profit. The character and extent of the extra work, together with the basis of compensation, shall be communicated in a letter to the Contractor by the Project Engineer. If the Contractor objects to any portion of the defined extra work and/or basis of compensation, and if the Contractor is not willing to agree to the extra work, the Contractor must, within 15 calendar days of its receipt of said letter, respond in writing describing specifically what portions of the extra work the Contractor finds objectionable, the nature of its objections, and the basis for its objections. If the Contractor does not do so, it shall be deemed to have accepted the terms of the extra work as set forth in the Project Engineer's letter.

E. Cost Plus Work:

The Contractor's compensation for all work done on a cost-plus basis shall be determined in accordance with the following:

(a) Labor:

(1) For all labor, payment calculations shall be based on the wage rate actually paid by Contractor as shown by its certified payroll, which shall be at least the minimum rate established for the Project by the State Labor Department or the U.S. Department of Labor. For all foremen in direct charge of Project work, payment calculations shall be based the actual wage paid by Contractor to the foremen as shown on the Contractor's certified payroll.

(2) The payment calculations shall the actual costs paid to, or on behalf of, workers by reason of allowances, health and welfare benefits, pension fund benefits and other such benefits, when such amounts are required by a collective bargaining agreement or another employment contract generally applicable to the classes of labor employed on the Project. The Contractor shall certify all such costs.

(3) For property damage, bonding, liability and workmen's compensation insurance premiums, unemployment insurance contributions and social security taxes on Project cost-plus work, the payment calculations shall include Contractor's actual Project costs. The Contractor shall provide to the Project Engineer documentation, satisfactory to the Project Engineer in form and substance, of all such costs.

(4) The payment calculations shall also include an amount equal to 20% (15% for overhead, 5% for profit) of the total sums described in (a) (1) through (3) above.

No part of the salary or expenses of anyone connected with the Contractor's forces above the grade of foreman, who provides general supervision of Project work, will be included in the above cost calculations, except when the Contractor's organization is entirely occupied with cost-plus work, in which case the salary of a superintendent may be included in said labor item when the nature of the pertinent Project work is such that, in the opinion of the Project Engineer, a superintendent is required for that work. The allowable rate of pay for such superintendent shall be agreed upon before the Contractor begins the pertinent work. If no agreement on the rate can be reached, the Project Engineer will make a determination based on such rate as he deems reasonable.

The Project Engineer reserves the right to determine the number and type of personnel to be employed for the cost-plus Project work.

(b) Specialized Work: When the Project Engineer directs the Contractor to perform specialized work requiring skills, tools and equipment substantially unlike those ordinarily used by the Contractor or its authorized Project subcontractors, the payment calculations for such work shall include the cost for the use of a specialist to perform the specialized work. For such specialized services, including materials incorporated into the Project, the payment calculations for such work shall include Contractor's actual costs, plus additional compensation in accordance with subparagraph (e) below. Prior to performing such specialized work, the Contractor shall obtain and submit to the Project Engineer a minimum of three price quotes for the work, if requested by the Project Engineer.

(c) Materials: For all materials necessary for cost-plus Project work, the payment calculations shall include Contractor's actual cost for such materials as delivered to the Project site, including delivery charges as shown by original receipted bills, plus 15% of the sum of said cost and charges.

In lieu of receipted bills for materials used which were not specifically purchased for the Project, but were taken from the Contractor's stock, the Contractor shall provide to the Project Engineer an affidavit certifying that such materials were not purchased for the Project, that the materials were taken from the Contractor's stock, that the quantity claimed to have been used on the Project was actually so used, and that the price claimed for the materials is currently their fair market value. The payment calculations shall include Contractor's costs of transporting the materials to the Project site, in accordance with subparagraphs (a) and (d) hereof.

The payment calculations shall not include any penalty or charge incurred due to the Contractor's late or delayed payment for the pertinent materials.

(d) Equipment: All equipment used for cost-plus Project work must, in the judgment of the Project Engineer, be in good working condition and suitable for the purpose intended; and the Project Engineer reserves the right to determine the size and number of units of equipment to be used for such work. The manufacturer's ratings shall be the basis for all Rental Rate Blue Book classifications used for payment purposes. ("Rental Rate Blue Book" as used in these specifications refers to the current edition of the Rental Rate Blue Book, taking into account all current Rate Adjustment Tables, and amendments thereof, which is published by K III Directory Corporation of San Jose, California, including all current Rate Adjustment Tables and amendments thereof.) Trucks will be classified by cubic-yard capacity.

Amounts claimed by the Contractor based on equipment rental rates shall not include any percentage mark-up will be added for payment purposes to amounts charged by the Contractor based on equipment rental rates.

No percentage mark-up will be added for payment purposes to amounts charged by the Contractor based on equipment rental rates.

No percentage mark-up will be included in the payment calculation in connection with amounts claimed by the Contractor based on equipment rental rates.

The payment calculations shall not include rental rates for small tools needed to complete the cost-plus Project work.

For payment calculations purposes, estimated operating costs per hour from the Rental Rate Blue Book will apply only to the actual time during which the equipment is actively being used to perform cost-plus Project work.

For equipment that is also being used for non-cost-plus Project work, the payment calculations shall include the applicable hourly rate only for the actual time that the equipment is assigned to cost-plus Project work. The applicable period of assignment for each piece of equipment shall start when the equipment commences to be used for cost-plus Project work ordered by the Project Engineer, and shall end at the time designated by the Project Engineer.

For equipment which has to be brought to the Project site exclusively for cost-plus work, the payment calculations shall include Contractor's loading and unloading costs and costs of transporting such equipment to and from the Project site; provided, however, that cost claimed for return transportation from the Project site shall not exceed the cost of moving the equipment to that site. If such a piece of equipment is self-propelled, and is driven to the Project site under its own power, then the payment calculation shall include only operating costs and labor costs for its transport to and from the Project site. The payment calculations will not, however, include any loading, unloading and transportation costs if the equipment is used for any Project work on the site other than cost-plus work.

1) Owned Equipment: The payment calculation shall include the applicable rental rate set forth in the Rental Rate Blue Book for any equipment (1) which the Contractor uses, with the Project Engineer's authorization, to perform cost-plus Project work, and (2) which is owned by the Contractor or a subsidiary, affiliate, or parent company of the Contractor (no matter how far up or down the chain of ownership from the Contractor).

The maximum hourly rate to be used in payment calculations for Contractor-owned equipment assigned to cost-plus work shall be the applicable monthly rate in the Rental Rate Blue Book, divided by 176 (176 working hours per month).

Should the proper completion of the cost-plus Project work require equipment of a type not covered by the Rental Rate Blue Book, the Project Engineer will determine, and the payment calculation shall include a reasonable rental rate based on rates prevailing in the area of the Project. If practicable, such rates shall be determined by the Project Engineer before the affected work is begun. If the Contractor proposes that the Project Engineer use a particular rate in such an instance, the Contractor must disclose to the Project Engineer the specific sources of, or support for, said rate.

If a piece of equipment owned by the Contractor is assigned to cost-plus Project work, but remains idle for some portion of the period of the cost-plus work, the payment calculation, shall include for that idle time 50 percent of the applicable rental rate (exclusive of operating costs) in the Rental Rate Blue Book.

For payment calculation purposes, the period of equipment usage shall be deemed to start when the Contractor begins to use the equipment for cost-plus Project work and shall be deemed to end when

the equipment is released by the Project Engineer from use for such work. Any hours during which the equipment is used for work other than cost-plus Project work will be deducted from the payment calculation. For any piece of Contractor-owned equipment assigned to cost-plus Project work, the payment calculation shall include aggregate minimum of 8 hours (of use time, idle time, or a combination thereof) in each 24-hour day (measured from one midnight to the following midnight) during the assignment period. The payment calculation shall not include Saturdays, Sundays and legal holidays during which the Contractor does no Project work, or for any other day on which the Project Engineer orders the Contractor to do no Project work. If the equipment is used to perform cost-plus Project work for more than 8 hours in a day, the payment calculation shall include the applicable hourly rate computed on a monthly basis for the actual time of use; however the payment calculation shall not include any claim for more than 8 hours of idle time for a piece of equipment during a given day.

The City shall have the right to limit its aggregate payment calculations for idle time for a given piece of equipment to the replacement value of that equipment.

(2) Rented Equipment: If the Project Engineer determines that in order to perform the cost-plus Project work the Contractor must rent certain machinery, trucks or other equipment not owned by the Contractor or a subsidiary, affiliate, or parent company of the Contractor (no matter how far up or down the chain of ownership from the Contractor), the Contractor shall inform the Project Engineer, in advance of such rental, (a) of the specific nature of the rental(s), (b) the reasons for its need for such rental(s), (c) the anticipated or proposed rental rate(s), and (d) the estimated duration for the use of the equipment. Rates for such rented equipment must be provided based on the following:

—A daily rate per hour when the equipment is to be specifically assigned to Project work by the Project Engineer for a period of 7 consecutive calendar days or less.

—A weekly rate per hour when such assigned time exceeds 7 consecutive calendar days, but does not exceed 21 consecutive calendar days.

—A monthly rate per hour when such assigned time exceeds 21 consecutive calendar days.

The applicable daily, weekly, or monthly rate will be determined at the expiration of 21 calendar days or upon release of the equipment by the Project Engineer, whichever occurs first. Interruptions of the rental period, when equipment is used on other than assigned cost-plus work, will not entitle the Contractor to payment at a rental rate that would be applicable to the shorter periods arguably occasioned by such interruptions.

Prior to renting such equipment, the Contractor shall obtain and submit to the Project Engineer a minimum of three quotes, if requested by the Project Engineer.

The payment calculation shall include such rental rates actually paid by the Contractor, provided that the given use and rental rate are acceptable to the Project Engineer. In order for any such costs to be considered, the Contractor must provide the Project Engineer with a copy of the original receipted bill for the rental expenses incurred.

(e) Administrative Expense: When extra work on a cost-plus basis is performed by an authorized subcontractor, the payment calculation shall include an additional 7.5% for that work; and such amount will be in addition to the percentage payments described in (a), (b), (c) and (d) above, as a reimbursement for the Contractor's administrative expense in connection with such work. Approval of such additional amounts will be given only after the Contractor provides to the Project Engineer receipted invoices for all relevant costs.

(f) Bonding Costs: For bonding on the total cost of the cost-plus work including administrative expenses as outlined in (e) above, the payment calculation shall include Contractor‘s actual cost. The Contractor shall provide to the Project Engineer documentation, satisfactory to the Project Engineer in form and substance, of all such costs.

(g) Miscellaneous: Any compensation associated with (a), (b), (c), (d) and (e) above shall be deemed to be payment in full for the extra work and shall be deemed as full compensation for same, including costs of superintendence, use of small tools, equipment for which no rental is allowed, safety equipment, consumables, field office overhead, home office overhead, bonding, other insurance, and profit. The Contractor's representative and the Project Engineer shall compare their respective records of the extra work done on a cost-plus basis at the end of each day. Copies of these records shall be signed by both the Project Engineer and the Contractor's representative. The Project Engineer will then forward a copy of same to the Contractor and to any affected subcontractor in accordance with City procedures. Upon payment of such costs by the Contractor, the Contractor shall immediately furnish the Project Engineer with original receipted bills covering the costs, including transportation charges, for all materials used for such work.

F. Notification to Surety:

If the provisions of any bond require notice to be given to a surety of any change affecting the general scope of the Work or the provisions of the Contract Documents (including, but not limited to, Contract Price or Contract Times), the giving of any such notice will be Contractor’s responsibility. The amount of each applicable bond will be adjusted to reflect the effect of any such change.

ARTICLE 21. ADDENDUM TO GENERAL CONDITION ARTICLE 2

Reference is made to General Condition Article 2 – Construction Progress Schedule. The submittal of the Schedule of Values, Sedimentation and Erosion Control Measures, Water Control Plan, and Environmental Protection Plan, shall be as outlined in the General Conditions as modified by these Special Conditions, and as set forth in the Technical Specifications.

A. Additional requirements with regard to the Construction Progress Schedule are as follows:

1. The Construction Progress Schedule shall show, in detail, the proposed sequence of the Work and the estimated date of starting and completing each stage of the Work in order to complete the Project within the Contract Time. Prepare the schedule in a manner so that the actual progress of the Work can be recorded and compared with the expected progress.

Coordinate the construction schedule with the proposed schedules of other Contractors, if any, engaged in work at, or adjacent to, the Project site.

2. Coordinate the Work and make every effort to maintain the Construction Progress Schedule. In the event actual progress begins to lag the schedule, promptly employ additional means or methods of construction to make up the lost time.

3. Notify the Project Engineer in writing

   1) 72 hours before commencing any work at the site, and

   2) at least 48 hours before resuming work in the case of a temporary suspension of work.

4. Keep the construction schedule current and revise or confirm the schedule in accordance with General Conditions, to accurately reflect the progress of the Work, past progress, and anticipated future progress.

B. Prepare and submit, with the Construction Progress Schedule, a separate Submittal Schedule listing dates for submission and dates reviewed for each required submittal including plans, shop drawings, samples, certifications, permits, etc.

ARTICLE 22. PHOTOGRAPHIC AND VIDEO DOCUMENTATION

Drawings and general provisions of the Contract, including General and Special Conditions apply to this Section.

This Section includes administrative and procedural requirements for a professional photographer to perform the following services:

1. Preconstruction Video
2. Periodic construction photographs.
3. Final completion construction photographs.

Qualification Data: For firms and persons to demonstrate their capabilities and experience. Submit lists of completed projects with project names, contract value and addresses, names and addresses of engineers and owners with work performed. The firm or individual shall be of established reputation who has been regularly engaged as a professional photographer for not less than three years.

Preconstruction Video: Within 14 calendar days following the award of the Contract the Contractor's approved Photographer shall document the entire Project existing site conditions, in the presence of the Engineer's Representative, in a format acceptable to the City. The Photographer shall at all times clearly identify the location of the video as it progresses and document the condition and site features

of the existing road and elements and at all adjacent and affected properties. Aerial angles shall be included to record the location of existing pole mounted overhead wire and facilities.

The Contractor shall submit two (2) copies of the video no later than 14 calendar days prior to the start of construction so it can be reviewed for clarity and content. Any areas that are missing, incomplete or unclear shall be repeated and re-submitted to the satisfaction of the Engineer.

Periodic Construction Photographs: Once a month, and at regular intervals designated by the Engineer, the Contractor's Photographer shall provide a maximum of twenty four (24) 8x10 inch smooth-surface matte prints on single weight commercial –grade stock photo paper, enclosed back to back in clear plastic sleeves that are punched for standard 3-ring binder. Two (2) copies of each photograph shall be submitted to the Engineer no later than 14 calendar days after being taken.
On the back of each print provide an applied label or rubber-stamped impression with the following information:

a. Name of Project and Owner
b. Name and address of photographer
c. Name of Engineer
d. Name of Contractor
e. Date photograph was taken
f. Description of vantage point, indicating location of camera, and direction of view.

Final Completion Photographs- Take a minimum of 48 photographs after the date of substantial completion for submission with Project Record Documents. The Engineer will direct photographer for desired vantage points. Submit two (2) copies of final completion photographs.
Measurement and Payment- The work under this section will not be measured for payment. The Contractor's cost in connection therewith will be considered incidental to, and included in, the general cost of the Contract.

ARTICLE 23. LAYDOWN AREAS

All Laydown Areas shall be pre-approved by the Project Engineer. A Laydown Area shall not impede traffic flow within the City streets or the Water Pollution Control Facility. The Contractor may only use these areas during construction and shall be required to restore any disturbed areas to a condition as good as or better than existing conditions.
Contractor shall also be required to clean up, restore, and make safe and usable all Laydown Areas as directed by the Project Engineer. This may include removing equipment, materials, tools, etc., from the any Laydown Area for a period to be determined by the City of Waterbury.

ARTICLE 24. ADDENDUM TO GENERAL CONDITION ARTICLE 36

Reference is made to General Conditions Article 36 – Apprentices – NOT APPLICABLE

ARTICLE 25. ADDENDUM TO GENERAL CONDITION ARTICLE 45

Reference is made to General Conditions Article 45 – Residents' Preference in Work on Other Public Facilities – NOT APPLICABLE

ARTICLE 27. ADDENDUM TO GENERAL CONDITION ARTICLE 66

Reference is made to General Conditions Article 66 – Blasting and Explosives – NOT APPLICABLE

ARTICLE 28. ADDENDUM TO GENERAL CONDITION ARTICLE 67

Reference is made to General Conditions Article 67 – Tunneling – NOT APPLICABLE

ARTICLE 29. ADDENDUM TO GENERAL CONDITION ARTICLE 90

Reference is made to General Conditions Article 90 – Planimeter – NOT APPLICABLE

ARTICLE 30. ADDENDUM TO GENERAL CONDITION ARTICLE 99

Reference is made to General Conditions Article 99 – Water Quality of Wells – NOT APPLICABLE

ARTICLE 31. ADDENDUM TO GENERAL CONDITION ARTICLE 100

If any of the work is in the City streets or State roads Contractor shall coordinate with the Jacobs Project Engineer. The Contractor shall also conform to all city and State DOT requirements for materials and methods used in these instances. At a minimum the Contractor is to provide traffic controls and flag personnel.

ARTICLE 32. UNIFORMED POLICE ALLOWANCE

An allowance has been provided in the contract for outside Agency traffic control. This shall be used for approved police details needed to direct traffic while work activities may impede vehicular right of way. This allowance item shall only be used if authorized in writing in advance by the City and

Project Engineer. Determination of amounts to be paid for work under this Article shall be agreed to in advance by the Contractor, City and Project Engineer and shall not exceed amounts established in Section 00 30 00 (Bid Form). At project closeout, unused amounts remaining in this allowance shall be credited to the City by Final Change Order (as part of and so documented in the Contractor's final payment request).

In no instance shall payment(s) be made in pursuant to this Article result in an increase in the amount of Total Compensation or Extension of Contract Time. Any increase in the Contract Total Compensation or Contract time requires a duly authorized and executed Contract amendment in accordance of Section 27 of the Contract.

ARTICLE 33. ELECTRIC UTILITY FEE ALLOWANCE

An allowance has been provided in the contract for Electric Utility Fee. This item includes construction-related fees paid to the electric utility, including administrative fee, fees for supporting and protecting existing utility poles and overhead wires, and any electric utility relocation work that may be necessary for which payment is not provided elsewhere in the Bid. This allowance item shall only be used if authorized in writing in advance by the City and Project Engineer. Determination of amounts to be paid for work under this Article shall be agreed to in advance by the Contractor, City and Project Engineer and shall not exceed amounts established in Section 00 30 00 (Bid Form). At project closeout, unused amounts remaining in this allowance shall be credited to the City by Final Change Order (as part of and so documented in the Contractor's final payment request).

In no instance shall payment(s) be made in pursuant to this Article result in an increase in the amount of Total Compensation or Extension of Contract Time. Any increase in the Contract Total Compensation or Contract time requires a duly authorized and executed Contract amendment in accordance of Section 27 of the Contract.

END OF SECTION

PREVAILING WAGE BID PACKAGE

- Prevailing Wage Law Poster (PDF, 97KB)
- Section 31-53b: Construction safety and Health Course. Proof of completion required for employees on public building projects.
    - Informational Bulletin - The 10-Hour OSHA Construction Safety and Health Course (PDF, 20KB)
- Notice For All Mason Contractors (PDF, 5KB)
- CT General Statute 31-55a
- Contractor's Wage Certification Form (PDF, 11KB)
- Payroll Certification - Public Works Projects
- Information Bulletin - Occupational Classifications
- Footnotes (Rev. 07/19) (PDF)





THIS IS A PUBLIC WORKS PROJECT

Covered by the

PREVAILING WAGE LAW

CT General Statutes Section 31-53

If you have QUESTIONS regarding your wages
CALL (860) 263-6790

Section 31-55 of the CT State Statutes requires every contractor or subcontractor performing work for the state to post in a prominent place the prevailing wages as determined by the Labor Commissioner.

Sec. 31-53b. Worker training requirements for public works projects. Enforcement. Regulations. Exceptions. (a) Each contract for a public works project entered into on or after July 1, 2009, by the state or any of its agents, or by any political subdivision of the state or any of its agents, described in subsection (h) of section 31-53, shall contain a provision requiring that each contractor furnish proof with the weekly certified payroll form for the first week each employee begins work on such project that any person performing the work of a mechanic, laborer or worker pursuant to the classifications of labor under section 31-53 on such public works project, pursuant to such contract, has completed a course of at least ten hours in duration in construction safety and health approved by the federal Occupational Safety and Health Administration or, has completed a new miner training program approved by the Federal Mine Safety and Health Administration in accordance with 30 CFR 46 or, in the case of telecommunications employees, has completed at least ten hours of training in accordance with 29 CFR 1910.268, and, on or after July 1, 2012, that any plumber or electrician subject to the continuing education requirements of section 20-334d, who has completed a course of at least ten hours in duration in construction safety and health approved by the federal Occupational Safety and Health Administration five or more years prior to the date such electrician or plumber begins work on such public works project, has completed a supplemental refresher training course of at least four hours in duration in construction safety and health taught by a federal Occupational Safety and Health Administration authorized trainer.

(b) Any person required to complete a course or program under subsection (a) of this section who has not completed the course or program shall be subject to removal from the worksite if the person does not provide documentation of having completed such course or program by the fifteenth day after the date the person is found to be in noncompliance. The Labor Commissioner or said commissioner's designee shall enforce this section.

(c) Not later than January 1, 2012, the Labor Commissioner shall adopt regulations, in accordance with the provisions of chapter 54, to implement the provisions of subsections (a) and (b) of this section. Such regulations shall require that the ten-hour construction safety and health courses required under subsection (a) of this section be conducted in accordance with federal Occupational Safety and Health Administration Training Institute standards, or, in the case of a supplemental refresher training course, shall include, but not be limited to, an update of revised Occupational Safety and Health Administration standards and a review of required construction hazards training, or in accordance with Federal Mine Safety and Health Administration Standards or in accordance with 29 CFR 1910.268, as appropriate. The Labor Commissioner shall accept as sufficient proof of compliance with the provisions of subsection (a) or (b) of this section a student course completion card issued by the federal Occupational Safety

and Health Administration Training Institute, or such other proof of compliance said commissioner deems appropriate, dated no earlier than five years before the commencement date of such public works project or, in the case of supplemental refresher training, a student course completion card issued by said Occupational Safety and Health Administration authorized trainer dated not earlier than five years prior to the date such electrician or plumber begins work on such public works project.

(d) This section shall not apply to employees of public service companies, as defined in section 16-1, or drivers of commercial motor vehicles driving the vehicle on the public works project and delivering or picking up cargo from public works projects provided they perform no labor relating to the project other than the loading and unloading of their cargo.

(P.A. 06-175, S. 1; P.A. 08-83, S. 1; P.A. 10-47, S. 2; P.A. 11-63, S. 1.)

History: P.A. 08-83 amended Subsec. (a) by making provisions applicable to public works project contracts entered into on or after July 1, 2009, replacing provision re total cost of work with reference to Sec. 31-53(g), requiring proof in certified payroll form that new mechanic, laborer or worker has completed a 10-hour or more construction safety course and adding provision re new miner training program, amended Subsec. (b) by substituting "person" for "employee" and adding "or program", amended Subsec. (c) by adding "or in accordance with Federal Mine Safety and Health Administration Standards" and setting new deadline of January 1, 2009, deleted former Subsec. (d) re "public building", added new Subsec. (d) re exemptions for public service company employees and delivery drivers who perform no labor other than delivery and made conforming and technical changes, effective January 1, 2009; P.A. 10-47 made a technical change in Subsec. (a); P.A. 11-63 amended Subsec. (a) by adding provision re supplemental refresher training course for plumbers and electricians subject to Sec. 20-334d, amended Subsec. (c) by adding provisions re regulations and subject matter of refresher training course and refresher training course student completion cards, and made technical changes, effective July 1, 2011.

Informational Bulletin

THE 10-HOUR OSHA CONSTRUCTION SAFETY AND HEALTH COURSE

(applicable to public building contracts entered into *on or after July 1, 2007*, where the total cost of all work to be performed is at least $100,000)

(1) This requirement was created by Public Act No. 06-175, which is codified in Section 31-53b of the Connecticut General Statutes (pertaining to the prevailing wage statutes);

(2) The course is required for public building construction contracts (projects funded in whole or in part by the state or any political subdivision of the state) entered into on or after July 1, 2007;

(3) It is required of private employees (not state or municipal employees) and apprentices who perform manual labor for a general contractor or subcontractor on a public building project where the total cost of all work to be performed is at least $100,000;

(4) The ten-hour construction course pertains to the ten-hour Outreach Course conducted in accordance with federal OSHA Training Institute standards, and, for telecommunications workers, a ten-hour training course conducted in accordance with federal OSHA standard, 29 CFR 1910.268;

(5) The internet website for the federal OSHA Training Institute is http://www.osha.gov/fso/ote/training/edcenters/fact_sheet.html;

(6) The statutory language leaves it to the contractor and its employees to determine who pays for the cost of the ten-hour Outreach Course;

(7) Within 30 days of receiving a contract award, a general contractor must furnish proof to the Labor Commissioner that all employees and apprentices performing manual labor on the project will have completed such a course;

(8) Proof of completion may be demonstrated through either: (a) the presentation of a *bona fide* student course completion card issued by the federal OSHA Training Institute; *or* (2) the presentation of documentation provided to an employee by a trainer certified by the Institute pending the actual issuance of the completion card;

(9) Any card with an issuance date more than 5 years prior to the commencement date of the construction project shall not constitute proof of compliance;

(10) Each employer shall affix a copy of the construction safety course completion card to the certified payroll submitted to the contracting agency in accordance with Conn. Gen. Stat. § 31-53(f) on which such employee's name first appears;

(11) Any employee found to be in non-compliance shall be subject to removal from the worksite if such employee does not provide satisfactory proof of course completion to the Labor Commissioner by the fifteenth day after the date the employee is determined to be in noncompliance;

(12) Any such employee who is determined to be in noncompliance may continue to work on a public building construction project for a maximum of fourteen consecutive calendar days while bringing his or her status into compliance;

(13) The Labor Commissioner may make complaint to the prosecuting authorities regarding any employer or agent of the employer, or officer or agent of the corporation who files a false certified payroll with respect to the status of an employee who is performing manual labor on a public building construction project;

(14) The statute provides the minimum standards required for the completion of a safety course by manual laborers on public construction contracts; any contractor can exceed these minimum requirements; and

(15) Regulations clarifying the statute are currently in the regulatory process, and shall be posted on the CTDOL website as soon as they are adopted in final form.

(16) Any questions regarding this statute may be directed to the Wage and Workplace Standards Division of the Connecticut Labor Department via the internet website of http://www.ctdol.state.ct.us/wgwkstnd/wgemenu.htm; or by telephone at (860)263-6790.

THE ABOVE INFORMATION IS PROVIDED EXCLUSIVELY AS AN EDUCATIONAL RESOURCE, AND IS NOT INTENDED AS A SUBSTITUTE FOR LEGAL INTERPRETATIONS WHICH MAY ULTMATELY ARISE CONCERNIG THE CONSTRUCTION OF THE STATUTE OR THE REGULATIONS.

November 29, 2006

Notice

To All Mason Contractors and Interested Parties Regarding Construction Pursuant to Section 31-53 of the Connecticut General Statutes (Prevailing Wage)

The Connecticut Labor Department Wage and Workplace Standards Division is empowered to enforce the prevailing wage rates on projects covered by the above referenced statute.

Over the past few years the Division has withheld enforcement of the rate in effect for workers who operate a forklift on a prevailing wage rate project due to a potential jurisdictional dispute.

The rate listed in the schedules and in our Occupational Bulletin (see enclosed) has been as follows:

Forklift Operator:

- Laborers (Group 4) Mason Tenders - operates forklift solely to assist a mason to a maximum height of nine feet only.

- Power Equipment Operator (Group 9) - operates forklift to assist any trade and to assist a mason to a height over nine feet.

The U.S. Labor Department conducted a survey of rates in Connecticut but it has not been published and the rate in effect remains as outlined in the above Occupational Bulletin.

Since this is a classification matter and not one of jurisdiction, effective January 1, 2007 the Connecticut Labor Department will enforce the rate on each schedule in accordance with our statutory authority.

Your cooperation in filing appropriate and accurate certified payrolls is appreciated.

Sec. 31-55a. Annual adjustments to wage rates by contractors doing state work. Each contractor that is awarded a contract on or after October 1, 2002, for (1) the construction of a state highway or bridge that falls under the provisions of section 31-54, or (2) the construction, remodeling, refinishing, refurbishing, rehabilitation, alteration or repair of any public works project that falls under the provisions of section 31-53 shall contact the Labor Commissioner on or before July first of each year, for the duration of such contract, to ascertain the prevailing rate of wages on an hourly basis and the amount of payment or contributions paid or payable on behalf of each mechanic, laborer or worker employed upon the work contracted to be done, and shall make any necessary adjustments to such prevailing rate of wages and such payment or contributions paid or payable on behalf of each such employee, effective each July first.

(P.A. 02-69, S. 1.)

CONNECTICUT DEPARTMENT OF LABOR
WAGE AND WORKPLACE STANDARDS DIVISION

CONTRACTORS WAGE CERTIFICATION FORM

Construction Manager at Risk/General Contractor/Prime Contractor

I,_____of _____
Officer, Owner, Authorized Rep. Company Name

do hereby certify that the _____
Company Name

_____
Street

_____
City

and all of its subcontractors will pay all workers on the

_____
Project Name and Number

_____
Street and City

the wages as listed in the schedule of prevailing rates required for such project (a copy of which is attached hereto).

_____
Signed

Subscribed and sworn to before me this _____ day of _____,_____.

_____
Notary Public

Return to:

Connecticut Department of Labor
Wage & Workplace Standards Division
200 Folly Brook Blvd.
Wethersfield, CT 06109

Rate Schedule Issued (Date): _____

[New] In accordance with Section 31-53b(a) of the C.G.S. each contractor shall provide a copy of the OSHA 10 Hour Construction Safety and Health Card for each employee, to be attached to the first certified payroll on the project.

In accordance with Connecticut General Statutes, 31-53
Certified Payrolls with a statement of compliance
shall be submitted monthly to the contracting agency.

PAYROLL CERTIFICATION FOR PUBLIC WORKS PROJECTS

WEEKLY PAYROLL

Connecticut Department of Labor
Wage and Workplace Standards Division
200 Folly Brook Blvd.
Wethersfield, CT 06109

CONTRACTOR NAME AND ADDRESS:

SUBCONTRACTOR NAME & ADDRESS

WORKER'S COMPENSATION INSURANCE CARRIER

POLICY #

EFFECTIVE DATE:
EXPIRATION DATE:

PAYROLL NUMBER | Week-Ending Date | PROJECT NAME & ADDRESS

PERSON/WORKER, ADDRESS and SECTION	APPR RATE %	MALE/ FEMALE AND RACE*	WORK CLASSIFICATION Trade License Type & Number - OSHA 10 Certification Number	DAY AND DATE S / M / T / W / TH / F / S HOURS WORKED EACH DAY	Total ST Hours Total O/T Hours	BASE HOURLY RATE TOTAL FRINGE BENEFIT PLAN CASH	TYPE OF FRINGE BENEFITS Per Hour 1 through 6 (see back)	GROSS PAY FOR ALL WORK PERFORMED THIS WEEK	TOTAL DEDUCTIONS FICA / FEDERAL WITH-HOLDING / STATE WITH-HOLDING / LIST OTHER	GROSS PAY FOR THIS PREVAILING RATE JOB	CHECK # AND NET PAY
						$ Base Rate	1. $ 2. $ 3. $				
						$ Cash Fringe	4. $ 5. $ 6. $				
						$ Base Rate	1. $ 2. $ 3. $				
						$ Cash Fringe	4. $ 5. $ 6. $				
						$ Base Rate	1. $ 2. $ 3. $				
						$ Cash Fringe	4. $ 5. $ 6. $				
						$ Base Rate	1. $ 2. $ 3. $				
						$ Cash Fringe	4. $ 5. $ 6. $				

12/9/2013
WWS-CP1

*IF REQUIRED

*SEE REVERSE SIDE

PAGE NUMBER _____OF

OSHA 10 ~ATTACH CARD TO 1ST CERTIFIED PAYROLL

***FRINGE BENEFITS EXPLANATION (P):**

Bona fide benefits paid to approved plans, funds or programs, except those required by Federal or State Law (unemployment tax, worker's compensation, income taxes, etc.).

Please specify the type of benefits provided:

1) Medical or hospital care _____ 4) Disability_____

2) Pension or retirement _____ 5) Vacation, holiday_____

3) Life Insurance _____ 6) Other (please specify) _____

CERTIFIED STATEMENT OF COMPLIANCE

For the week ending date of _____,

I, _____of _____, (hereafter known as

Employer) in my capacity as _____ (title) do hereby certify and state:

Section A:

1. All persons employed on said project have been paid the full weekly wages earned by them during the week in accordance with Connecticut General Statutes, section 31-53, as amended. Further, I hereby certify and state the following:

a) The records submitted are true and accurate;

b) The rate of wages paid to each mechanic, laborer or workman and the amount of payment or contributions paid or payable on behalf of each such person to any employee welfare fund, as defined in Connecticut General Statutes, section 31-53 (h), are not less than the prevailing rate of wages and the amount of payment or contributions paid or payable on behalf of each such person to any employee welfare fund, as determined by the Labor Commissioner pursuant to subsection Connecticut General Statutes, section 31-53 (d), and said wages and benefits are not less than those which may also be required by contract;

c) The Employer has complied with all of the provisions in Connecticut General Statutes, section 31-53 (and Section 31-54 if applicable for state highway construction);

d) Each such person is covered by a worker's compensation insurance policy for the duration of his employment which proof of coverage has been provided to the contracting agency;

e) The Employer does not receive kickbacks, which means any money, fee, commission, credit, gift, gratuity, thing of value, or compensation of any kind which is provided directly or indirectly, to any prime contractor, prime contractor employee, subcontractor, or subcontractor employee for the purpose of improperly obtaining or rewarding favorable treatment in connection with a prime contract or in connection with a prime contractor in connection with a subcontractor relating to a prime contractor; and

f) The Employer is aware that filing a certified payroll which he knows to be false is a class D felony for which the employer may be fined up to five thousand dollars, imprisoned for up to five years or both.

2. OSHA~The employer shall affix a copy of the construction safety course, program or training completion document to the certified payroll required to be submitted to the contracting agency for this project on which such persons name first appears.

_____	_____	_____
(Signature)	(Title)	Submitted on (Date)

*****THIS IS A PUBLIC DOCUMENT*****
*****DO NOT INCLUDE SOCIAL SECURITY NUMBERS*****

Weekly Payroll Certification For Public Works Projects (Continued)

PAYROLL CERTIFICATION FOR PUBLIC WORKS PROJECTS

Week-Ending Date:
Contractor or Subcontractor Business Name:

WEEKLY PAYROLL

PERSON/WORKER, ADDRESS and SECTION	APPR. RATE %	MALE/ FEMALE AND RACE*	WORK CLASSIFICATION Trade License Type & Number - OSHA 10 Certification Number	DAY AND DATE S	M	T	W	TH	F	S HOURS WORKED EACH DAY	Total ST Hours Total O/T Hours	BASE HOURLY RATE TOTAL FRINGE BENEFIT PLAN CASH	TYPE OF FRINGE BENEFITS Per Hour 1 through 6 (see back)	GROSS PAY FOR ALL WORK PERFORMED THIS WEEK	TOTAL DEDUCTIONS FICA	FEDERAL WITH-HOLDING	STATE WITH-HOLDING	LIST OTHER	GROSS PAY FOR THIS PREVAILING RATE JOB	CHECK # AND NET PAY
												$ Base Rate $ Cash Fringe	1. $ 2. $ 3. $ 4. $ 5. $ 6. $							
												$ Base Rate $ Cash Fringe	1. $ 2. $ 3. $ 4. $ 5. $ 6. $							
												$ Base Rate $ Cash Fringe	1. $ 2. $ 3. $ 4. $ 5. $ 6. $							
												$ Base Rate $ Cash Fringe	1. $ 2. $ 3. $ 4. $ 5. $ 6. $							
												$ Base Rate $ Cash Fringe	1. $ 2. $ 3. $ 4. $ 5. $ 6. $							

*IF REQUIRED

NOTICE: THIS PAGE MUST BE ACCOMPANIED BY A COVER PAGE (FORM # WWS-CP1)

Information Bulletin
Occupational Classifications

The Connecticut Department of Labor has the responsibility to properly determine *"job classification"* on prevailing wage projects covered under C.G.S. Section 31-53(d).

Note: This information is intended to provide a sample of some occupational classifications for guidance purposes only. It is not an all-inclusive list of each occupation's duties. This list is being provided only to highlight some areas where a contractor may be unclear regarding the proper classification. If unsure, the employer should seek guidelines for CTDOL.

Below are additional clarifications of specific job duties performed for certain classifications:

- ***ASBESTOS WORKERS***

Applies all insulating materials, protective coverings, coatings and finishes to all types of mechanical systems.

- ***ASBESTOS INSULATOR***

Handle, install apply, fabricate, distribute, prepare, alter, repair, dismantle, heat and frost insulation, including penetration and fire stopping work on all penetration fire stop systems.

- ***BOILERMAKERS***

Erects hydro plants, incomplete vessels, steel stacks, storage tanks for water, fuel, etc. Builds incomplete boilers, repairs heat exchanges and steam generators.

- ***BRICKLAYERS, CEMENT MASONS, CEMENT FINISHERS, MARBLE MASONS, PLASTERERS, STONE MASONS, PLASTERERS. STONE MASONS, TERRAZZO WORKERS, TILE SETTERS***

Lays building materials such as brick, structural tile and concrete cinder, glass, gypsum, terra cotta block. Cuts, tools and sets marble, sets stone, finishes concrete, applies decorative steel, aluminum and plastic tile, applies cements, sand, pigment and marble chips to floors, stairways, etc.

- ***CARPENTERS, MILLWRIGHTS. PILEDRIVERMEN. LATHERS. RESILEINT FLOOR LAYERS, DOCK BUILDERS, DIKERS, DIVER TENDERS***

Constructs, erects, installs and repairs structures and fixtures of wood, plywood and wallboard. Installs, assembles, dismantles, moves industrial machinery. Drives piling into ground to provide foundations for structures such as buildings and bridges, retaining walls for earth embankments, such as cofferdams. Fastens wooden, metal or rockboard lath to walls, ceilings and partitions of buildings, acoustical tile layer, concrete form builder. Applies firestopping materials on fire resistive joint systems only. Installation of curtain/window walls only where attached to wood or metal studs. Installation of insulated material of all types whether blown, nailed or attached in other ways to walls, ceilings and floors of buildings. Assembly and installation of modular furniture/furniture systems. Free-standing furniture is not covered. This includes free standing: student chairs, study top desks, book box desks, computer furniture, dictionary stand, atlas stand, wood shelving, two-position information access station, file cabinets, storage cabinets, tables, etc.

- **LABORER, CLEANING**

• The clean up of any construction debris and the general (heavy/light) cleaning, including sweeping, wash down, mopping, wiping of the construction facility and its furniture, washing, polishing, and dusting.

- **DELIVERY PERSONNEL**

• If delivery of supplies/building materials is to one common point and stockpiled there, prevailing wages are not required. If the delivery personnel are involved in the distribution of the material to multiple locations within the construction site then they would have to be paid prevailing wages for the type of work performed: laborer, equipment operator, electrician, ironworker, plumber, etc.

• An example of this would be where delivery of drywall is made to a building and the delivery personnel distribute the drywall from one "stockpile" location to further sub-locations on each floor. Distribution of material around a construction site is the job of a laborer or tradesman, and not a delivery personnel.

- ***ELECTRICIANS***

Install, erect, maintenance, alteration or repair of any wire, cable, conduit, etc., which generates, transforms, transmits or uses electrical energy for light, heat, power or other purposes, including the Installation or maintenance of telecommunication, LAN wiring or computer equipment, and low voltage wiring. ****License required per Connecticut General Statutes: E-1,2 L-5,6 C-5,6 T-1,2 L-1,2 V-1,2,7,8,9.***

- ***ELEVATOR CONSTRUCTORS***

Install, erect, maintenance and repair of all types of elevators, escalators, dumb waiters and moving walks. ****License required by Connecticut General Statutes: R-1,2,5,6.***

- ***FORK LIFT OPERATOR***

Laborers Group 4) Mason Tenders - operates forklift solely to assist a mason to a maximum height of nine (9) feet only.

Power Equipment Operator Group 9 - operates forklift to assist any trade, and to assist a mason to a height over nine (9) feet.

- ***GLAZIERS***

Glazing wood and metal sash, doors, partitions, and 2 story aluminum storefronts. Installs glass windows, skylights, store fronts and display cases or surfaces such as building fronts, interior walls, ceilings and table tops and metal store fronts. Installation of aluminum window walls and curtain walls is the "joint" work of glaziers and ironworkers, which require equal composite workforce.

- ***IRONWORKERS***

Erection, installation and placement of structural steel, precast concrete, miscellaneous iron, ornamental iron, metal curtain wall, rigging and reinforcing steel. Handling, sorting, and installation of reinforcing steel (rebar). Metal bridge rail (traffic), metal bridge handrail, and decorative security fence installation. Installation of aluminum window walls and curtain walls is the "joint" work of glaziers and ironworkers which require equal composite workforce.

- ***INSULATOR***

• Installing fire stopping systems/materials for "Penetration Firestop Systems": transit to cables, electrical conduits, insulated pipes, sprinkler pipe penetrations, ductwork behind radiation, electrical cable trays, fire rated pipe penetrations, natural polypropylene, HVAC ducts, plumbing bare metal, telephone and communication wires, and boiler room ceilings.

- ***LABORERS***

Acetylene burners, asphalt rakers, chain saw operators, concrete and power buggy operator, concrete saw operator, fence and guard rail erector (except metal bridge rail (traffic), decorative security fence (non-metal).

installation.), hand operated concrete vibrator operator, mason tenders, pipelayers (installation of storm drainage or sewage lines on the street only), pneumatic drill operator, pneumatic gas and electric drill operator, powermen and wagon drill operator, air track operator, block paver, curb setters, blasters, concrete spreaders.

- ***PAINTERS***

Maintenance, preparation, cleaning, blasting (water and sand, etc.), painting or application of any protective coatings of every description on all bridges and appurtenances of highways, roadways, and railroads. Painting, decorating, hardwood finishing, paper hanging, sign writing, scenic art work and drywall hhg for any and all types of building and residential work.

- ***LEAD PAINT REMOVAL***

• Painter's Rate

1. Removal of lead paint from bridges.
2. Removal of lead paint as preparation of any surface to be repainted.
3. Where removal is on a Demolition project prior to reconstruction.

• Laborer's Rate

1. Removal of lead paint from any surface NOT to be repainted.
2. Where removal is on a *TOTAL* Demolition project only.

- ***PLUMBERS AND PIPEFITTERS***

Installation, repair, replacement, alteration or maintenance of all plumbing, heating, cooling and piping. ****License required per Connecticut General Statutes: P-1,2,6,7,8,9 J-1,2,3,4 SP-1,2 S-1,2,3,4,5,6,7,8 B-1,2,3,4 D-1,2,3,4.***

- ***POWER EQUIPMENT OPERATORS***

Operates several types of power construction equipment such as compressors, pumps, hoists, derricks, cranes, shovels, tractors, scrapers or motor graders, etc. Repairs and maintains equipment. ****License required, crane operators only, per Connecticut General Statutes.***

- ***ROOFERS***

Covers roofs with composition shingles or sheets, wood shingles, slate or asphalt and gravel to waterproof roofs, including preparation of surface. (demolition or removal of any type of roofing and or clean-up of any and all areas where a roof is to be relaid.)

- ***SHEETMETAL WORKERS***

Fabricate, assembles, installs and repairs sheetmetal products and equipment in such areas as ventilation, air-conditioning, warm air heating, restaurant equipment, architectural sheet metal work, sheetmetal roofing, and aluminum gutters. Fabrication, handling, assembling, erecting, altering, repairing, etc. of coated metal material panels and composite metal material panels when used on building exteriors and interiors as soffits, facia, louvers, partitions, canopies, cornice, column covers, awnings, beam covers, cladding, sun shades, lighting troughs, spires, ornamental roofing, metal ceilings, mansards, copings, ornamental and ventilation hoods, vertical and horizontal siding panels, trim, etc. The sheet metal classification also applies to the vast variety of coated metal material panels and composite metal material panels that have evolved over the years as an alternative to conventional ferrous and non-ferrous metals like steel, iron, tin, copper, brass, bronze, aluminum, etc. Fabrication, handling, assembling, erecting, altering, repairing, etc. of architectural metal roof, standing seam roof, composite metal roof, metal and composite bathroom/toilet partitions, aluminum gutters, metal and composite lockers and shelving, kitchen equipment, and walk-in coolers. To include testing and air –balancing ancillary to installation and construction.

- ***SPRINKLER FITTERS***

Installation, alteration, maintenance and repair of fire protection sprinkler systems. ****License required per Connecticut General Statutes: F-1,2,3,4.***

- ***TILE MARBLE AND TERRAZZO FINISHERS***

Assists and tends the tile setter, marble mason and terrazzo worker in the performance of their duties.

- **TRUCK DRIVERS**

~How to pay truck drivers delivering asphalt is under REVISION~

Truck Drivers are requires to be paid prevailing wage for time spent "working" directly on the site. These drivers remain covered by the prevailing wage for any time spent transporting between the actual construction location and facilities (such as fabrication, plants, mobile factories, batch plant, borrow pits, job headquarters, tool yards, etc.) dedicated exclusively, or nearly so, to performance of the contract or project, which are so located in proximity to the actual construction location that it is reasonable to include them. ****License required, drivers only, per Connecticut General Statutes.***

For example:

• Material men and deliverymen are not covered under prevailing wage as long as they are not directly involved in the construction process. If, they unload the material, they would then be covered by prevailing wage for the classification they are performing work in: laborer, equipment operator, etc.
• Hauling material off site is not covered provided they are not dumping it at a location outlined above.
• Driving a truck on site and moving equipment or materials on site would be considered covered work, as this is part of the construction process.

➢ *Any questions regarding the proper classification should be directed to:*
Public Contract Compliance Unit
Wage and Workplace Standards Division
Connecticut Department of Labor
200 Folly Brook Blvd, Wethersfield, CT 06109
(860) 263-6790.

Connecticut Department of Labor
Wage and Workplace Standards Division
FOOTNOTES

⇨ Please Note: If the "Benefits" listed on the schedule for the following occupations includes a letter(s) (+ a or + a+b for instance), refer to the information below.

Benefits to be paid at the appropriate prevailing wage rate for the listed occupation.

If the "Benefits" section for the occupation lists only a dollar amount, disregard the information below.

Bricklayers, Cement Masons, Cement Finishers, Concrete Finishers, Stone Masons
(Building Construction) and
(Residential- Hartford, Middlesex, New Haven, New London and Tolland Counties)

a. Paid Holiday: Employees shall receive 4 hours for Christmas Eve holiday provided the employee works the regularly scheduled day before and after the holiday. Employers may schedule work on Christmas Eve and employees shall receive pay for actual hours worked in addition to holiday pay.

Elevator Constructors: Mechanics

a. Paid Holidays: New Year's Day, Memorial Day, Independence Day, Labor Day, Veterans' Day, Thanksgiving Day, Christmas Day, plus the Friday after Thanksgiving.

b. Vacation: Employer contributes 8% of basic hourly rate for 5 years or more of service or 6% of basic hourly rate for 6 months to 5 years of service as vacation pay credit.

Glaziers

a. Paid Holidays: Labor Day and Christmas Day.

Power Equipment Operators
(Heavy and Highway Construction & Building Construction)

a. Paid Holidays: New Year's Day, Good Friday, Memorial day, Independence Day, Labor Day, Thanksgiving Day and Christmas Day, provided the employee works 3 days during the week in which the holiday falls, if scheduled, and if scheduled, the working day before and the working day after the holiday. Holidays falling on Saturday may be observed on Saturday, or if the employer so elects, on the preceding Friday.

Ironworkers

a. Paid Holiday: Labor Day provided employee has been on the payroll for the 5 consecutive work days prior to Labor Day.

Laborers (Tunnel Construction)

a. Paid Holidays: New Year's Day, Memorial Day, Independence Day, Labor Day, Thanksgiving Day and Christmas Day. No employee shall be eligible for holiday pay when he fails, without cause, to work the regular work day preceding the holiday or the regular work day following the holiday.

Roofers

a. Paid Holidays: July 4th, Labor Day, and Christmas Day provided the employee is employed 15 days prior to the holiday.

Sprinkler Fitters

a. Paid Holidays: Memorial Day, July 4th, Labor Day, Thanksgiving Day and Christmas Day, provided the employee has been in the employment of a contractor 20 working days prior to any such paid holiday.

Truck Drivers

(Heavy and Highway Construction & Building Construction)

a. Paid Holidays: New Year's Day, Memorial Day, Independence Day, Labor Day, Thanksgiving Day, Christmas day, and Good Friday, provided the employee has at least 31 calendar days of service and works the last scheduled day before and the first scheduled day after the holiday, unless excused.

Minimum Rates and Classifications for
Heavy/Highway Construction

ID#: 26-6921

Connecticut Department of Labor
Wage and Workplace Standards Division

By virtue of the authority vested in the Labor Commissioner under provisions of Section 31-53 of the General Statutes of Connecticut, as amended, the following are declared to be the prevailing rates and welfare payments and will apply only where the contract is advertised for bid within 20 days of the date on which the rates are established. Any contractor or subcontractor not obligated by agreement to pay to the welfare and pension fund shall pay this amount to each employee as part of his/her hourly wages.

Project Number: Project Town: Waterbury
State#: FAP#:
Project: Waterbury WPCF: Trumpet Brook Sewer Relocation

CLASSIFICATION	Hourly Rate	Benefits
1) Boilermaker	50.21	30.01
1a) Bricklayer, Cement Masons, Cement Finishers, Plasterers, Stone Masons	46.09	36.29
2) Carpenters, Piledrivermen	44.48	29.74
2a) Diver Tenders	44.48	29.74
2b) Divers Effluent	67.52	29.74
3) Divers	52.94	29.74
03a) Millwrights	45.14	30.24
03b) Carpenter-Welder	44.98	29.74
03c) Carpenter: Working with creosote lumber or acid	45.48	29.74

As of: June 22, 2026

4) Painters: (Bridge Construction) Brush, Roller, Blasting (Sand, Water, etc.), Spray	61.85	27.65
4a) Painters: Brush and Roller	41.17	27.65
4b) Painters: Spray	44.17	27.65
4bc) Painters: Spray Helper	42.17	27.65
4c) Painters: Steel Only	43.17	27.65
4d) Painters: Blast	46.17	27.65
4de) Painter: Blast Helper	42.17	27.65
4e) Painters: Tanks, Tower and Swingstage etc.	43.17	27.65
4f) Elevated Tanks (60 feet and above)	50.17	27.65
5) Electrician (Trade License required: E-1,2 L-5,6 C-5,6 T-1,2 L-1,2 V-1,2,7,8,9)	50.0	36.97+3% of gross wage
6) Ironworkers: Ornamental, Reinforcing, Structural, and Precast Concrete Erection	45.25	46.62 + a
7) Plumbers (Trade License required: (P-1,2,6,7,8,9 J-1,2,3,4 SP-1,2) and Pipefitters (Including HVAC Work) (Trade License required: S-1,2,3,4,5,6,7,8 B-1,2,3,4 D-1,2,3,4 G-1, G-2, G-8, G-9)	52.08	36.80
----LABORERS---- -		
8) Group 1: General Laborers and concrete specialist	37.0	30.47

As of: June 22, 2026

8) Group 1a: Acetylene Burners (Hours worked with a torch)	38.0	30.47
9) Group 2: Chain saw operators, fence and guard rail erectors, pneumatic tool operators, powdermen	37.25	30.47
10) Group 3: Pipelayers	37.5	30.47
11) Group 4: Jackhammer/Pavement breaker (handheld); mason tenders (cement/concrete), catch basin builders, asphalt rakers, air track operators, block paver, curb setter and forklift operators	37.5	30.47
12) Group 5: Toxic waste removal (non-mechanical systems)	39.0	30.47
13) Group 6: Blasters	38.75	30.47
Group 7: Asbestos/lead removal, non-mechanical systems (does not include leaded joint pipe)	40.0	30.47
Group 8: Traffic control signalmen	22.2	30.47
Group 9: Hydraulic Drills	37.75	30.47
Group 10: Toxic Waste Removers A or B With PPE	40.0	30.47
----LABORERS (TUNNEL CONSTRUCTION, FREE AIR). Shield Drive and Liner Plate Tunnels in Free Air.----		
13a) Miners, Motormen, Mucking Machine Operators, Nozzle Men, Grout Men, Shaft & Tunnel Steel & Rodmen, Shield & Erector, Arm Operator, Cable Tenders	39.23	30.47 + a
13b) Brakemen, Trackmen, Miners' Helpers and all other men	38.26	30.47 + a

As of: June 22, 2026

----CLEANING, CONCRETE AND CAULKING TUNNEL----		
14) Concrete Workers, Form Movers, and Strippers	38.26	30.47 + a
15) Form Erectors	38.59	30.47 + a
----ROCK SHAFT LINING, CONCRETE, LINING OF SAME AND TUNNEL IN FREE AIR:----		
16) Brakemen, Trackmen, Tunnel Laborers, Shaft Laborers, Miners Helpers	38.26	30.47 + a
17) Laborers Topside, Cage Tenders, Bellman	38.15	30.47 + a
18) Miners	39.23	30.47 + a
----TUNNELS, CAISSON AND CYLINDER WORK IN COMPRESSED AIR: ----		
18a) Blaster	45.72	30.47 + a
19) Brakemen, Trackmen, Groutman, Laborers, Outside Lock Tender, Gauge Tenders	45.52	30.47 + a
20) Change House Attendants, Powder Watchmen, Top on Iron Bolts	43.54	30.47 + a
21) Mucking Machine Operator, Grout Boss, Track Boss	46.31	30.47 + a
----TRUCK DRIVERS----(*see note below)		
Block Truck	39.98	33.00 + a

2 Axle	38.66	33.00 + a
Helpers	36.16	33.00 + a
Three Axle Trucks; Two Axle Mixer	38.77	33.00 + a
Three Axle Mixer	38.83	33.00 + a
Four Axle	38.89	33.00 + a
Four Axle Mixer	40.69	33.00 + a
5 Axle	38.89	33.00 + a
5 Axle Mixer	40.69	33.00 + a
Heavy Duty Trailer (40 tons and over)	41.16	33.00 + a
Heavy Duty Trailer (up to 40 tons)	39.89	33.00 + a
Snorkle Truck	39.04	33.00 + a
Swivel Dump and Tack Truck	38.89	33.00 + a
Euclids and Semi Trailer	38.94	33.00 + a

----POWER EQUIPMENT OPERATORS----

Group 1: Crane Handling or Erecting Structural Steel or Stone, Hoisting Engineer (2 drums or over), Caisson Drilled Shaft over 14". (Trade License Required)	60.66	30.95 + a
Group 1a: Front End Loader (7 cubic yards or over); Work Boat 26 ft. and over.	55.6	30.95 + a
Group 2: Cranes (100 ton rate capacity and over). (Trade License Required)	60.24	30.95 + a
Group 2a: Cranes (under 100 ton rated capacity), Magni Type-360 Rotating Forklift.	59.2	30.95 + a
Group 2b: Excavator over 2 cubic yards; Pile Driver ($3.00 premium when operator controls hammer), HF-1 Forklift, Drills with self contained power units, Micropile up to 14 inches helical pile.	55.17	30.95 + a
Group 3: Excavator; Gradall; Master Mechanic; Hoisting Engineer (all types of equipment where a drum and cable are used to hoist or drag material regardless of motive power of operation), Rubber Tire Excavator (Drott-1085 or similar);Grader Operator; Bulldozer Fine Grade (slopes, shaping, laser or GPS, etc.). (Trade License Required)	54.13	30.95 + a
Group 4: Trenching Machines; Lighter Derrick; CMI Machine or Similar; Koehring Loader (Skooper), Goldhofer.	53.61	30.95 + a
Group 5: Specialty Railroad Equipment; Asphalt Paver; Asphalt Spreader; Asphalt Reclaiming Machine; Line Grinder; Concrete Pumps; Drills with Self Contained Power Units; Boring Machine; Post Hole Digger; Auger; Pounder; Well Digger; Milling Machine (over 24" mandrel)	52.78	30.95 + a
Group 5 continued: Side Boom; Combination Hoe and Loader; Directional Driller, Geothermal Drill.	52.78	30.95 + a
Group 6: Front End Loader (3 up to 7 cubic yards); Bulldozer (rough grade dozer).	52.35	30.95 + a
Group 7: Asphalt Roller; Concrete Saws and Cutters (ride on types); Vermeer Concrete Cutter; Stump Grinder; Scraper; Snooper; Skidder; Milling Machine (24" and under Mandrel)	51.89	30.95 + a

As of: June 22, 2026

Group 8: Mechanic, Grease Truck Operator, Hydroblaster, Barrier Mover, Power Stone Spreader; Welder; Work Boat under 26 ft.; Transfer Machine, Rigger Foreman.	51.34	30.95 + a
Group 9: Front End Loader (under 3 cubic yards), Skid Steer Loader regardless of attachments (Bobcat or Similar); Fork Lift, Power Chipper; Landscape Equipment (including hydroseeder), Vacuum Excavation Truck and Hydrovac Excavation Truck (27 HG pressure or greater).	50.74	30.95 + a
Group 10: Vibratory Hammer, Ice Machine, Diesel and Air Hammer, etc.	47.91	30.95 + a
Group 11: Conveyor, Earth Roller; Power Pavement Breaker (whiphammer), Robot Demolition Equipment.	47.91	30.95 + a
Group 12: Wellpoint Operator.	47.82	30.95 + a
Group 13: Compressor Battery Operator.	47.04	30.95 + a
Group 14: Elevator Operator; Tow Motor Operator (Solid Tire No Rough Terrain).	45.45	30.95 + a
Group 15: Generator Operator; Compressor Operator; Pump Operator; Welding Machine Operator; Heater Operator.	44.89	30.95 + a
Group 16: Maintenance Engineer and Articulating End Dump.	43.99	30.95 + a
Group 17: Portable Asphalt Plant Operator; Portable Crusher Plant Operator; Portable Concrete Plant Operator., Portable Grout Plant Operator, Portable Water Filtration Plant Operator.	49.95	30.95 + a
Group 18: Power Safety Boat; Vacuum Truck; Zim Mixer; Sweeper; (minimum for any job requiring CDL license), Rigger, Signalman.	46.6	30.95 + a
Surveyor: Chief of Party	50.21	30.95 + a

As of: June 22, 2026

Surveyor: Assistant Chief of Party	46.3	30.95 + a
Surveyor: Instrument Man	44.55	30.95 + a
Surveyor: Rodman or Chairman	38.34	30.95 + a

**NOTE: SEE BELOW

----LINE CONSTRUCTION----(Railroad Construction and Maintenance)----

20) Lineman, Cable Splicer, Technician	59.91	34.00
21) Heavy Equipment Operator	53.92	31.88
22) Equipment Operator, Tractor Trailer Driver, Material Men	50.92	30.84
23) Driver Groundmen	44.93	28.47
23a) Groundman Experienced	32.95	13.99

----OUTSIDE LINE CONSTRUCTION----

24) Driver Groundmen	43.78	28.42
25) Groundmen	32.1	13.95
26) Heavy Equipment Operators	52.53	31.83

27) Linemen, Cable Splicers, Dynamite Men	58.37	33.94
28) Material Men, Tractor Trailer Drivers, Equipment Operators	49.61	30.79
29) Technician	56.12	32.85
----COMMUNICATION----		
Sales & Service Technician: To include but not limited to: Installation, Repair, Splicing and Maintenance	52.07	20.62
----DREDGING----		
Class A1: Mechanical Dredge Operator	48.48	17.32+a+b
Class B1: Maintenance Engineer	41.93	16.87+a+b
Class C1: Mate/Welder	38.38	16.62+a+b
Class D: Deckhand	30.86	16.09+a+b

Welders: Rate for craft to which welding is incidental.
Surveyors: Hazardous material removal: $3.00 per hour premium.
*Note: Hazardous waste removal work receives additional $1.25 per hour for truck drivers.
**Note: Hazardous waste premium $3.00 per hour over classified rate.
Truck Drivers: Trainers Premium: $3.00 over wage rate.
Truck Drivers: Night Premium - Mixer Drivers: $2.00 over wage rate.

Crane with 150 ft. boom (including jib) - $1.50 extra
Crane with 200 ft. boom (including jib) - $2.50 extra
Crane with 250 ft. boom (including jib) - $5.00 extra
Crane with 300 ft. boom (including jib) - $7.00 extra
Crane with 400 ft. boom (including jib) - $10.00 extra

As of: June 22, 2026

All classifications that indicate a percentage of the fringe benefits must be calculated at the percentage rate times the "base hourly rate".

Apprentices duly registered under the Commissioner of Labor's regulations on "Work Training Standards for Apprenticeship and Training Programs" Section 31-51-d-1 to 12, are allowed to be paid the appropriate percentage of the prevailing journeymen hourly base and the full fringe benefit rate, providing the work site ratio shall not be less than one full-time journeyperson instructing and supervising the work of each apprentice in a specific trade.

~~Connecticut General Statute Section 31-55a: Annual Adjustments to wage rates by contractors doing state work ~~

The Prevailing wage rates applicable to this project are subject to annual adjustments each July 1st for the duration of the project.
Each contractor shall pay the annual adjusted prevailing wage rate that is in effect each July 1st, as posted by the Department of Labor.
It is the contractor's responsibility to obtain the annual adjusted prevailing wage rate increases directly from the Department of Labor's website.
The annual adjustments will be posted on the Department of Labor's Web page: www.ct.gov/dol. For those without internet access, please contact the division listed below.
The Department of Labor will continue to issue the initial prevailing wage rate schedule to the Contracting Agency for the project.
All subsequent annual adjustments will be posted on our Web Site for contractor access.
Contracting Agencies are under no obligation pursuant to State labor law to pay any increase due to the annual adjustment provision.

Effective October 1, 2005 - Public Act 05-50: any person performing the work of any mechanic, laborer, or worker shall be paid prevailing wage

All Person who perform work ON SITE must be paid prevailing wage for the appropriate mechanic, laborer, or worker classification.

All certified payrolls must list the hours worked and wages paid to All Persons who perform work ON SITE regardless of their ownership i.e.: (Owners, Corporate Officers, LLC Members, Independent Contractors, et. al)

Reporting and payment of wages is required regardless of any contractual relationship alleged to exist between the contractor and such person.

~~Unlisted classifications needed for work not included within the scope of the classifications listed may be added after award only as provided in the labor standards contract clause (29 CFR 5.5 (a) (1) (ii)).

Please direct any questions which you may have pertaining to classification of work and payment of prevailing wages to the Wage and Workplace Standards Division, telephone (860)263-6790.

As of: June 22, 2026

CHAPTER 34: CITY POLICY

Section

General Provisions

34.01 Lost articles; state law adopted

Hiring of Waterbury Residents on Certain Publicly-Funded Construction Projects

34.10 Title
34.15 Purpose
34.16 Findings
34.17 Definitions
34.18 Hiring goal and implementation
34.19 Referral mechanism
34.20 Monitoring
34.21 Good faith efforts
34.22 Contract requirements for covered services

Cross-reference:

Centralized procurement system, see Ch. 38
Interlocal agreements, see Ch. 40

Statutory reference:

Advertising; sale of perishable goods, see Conn. Gen. Stat. § 50-11
Disposition after expiration of time for making claim, see Conn. Gen. Stat. § 50-14
Duties of finder, see Conn. Gen. Stat. § 50-10
Lost and unclaimed property, see Conn. Gen. Stat. Ch. 859
Procedure if unclaimed, see Conn. Gen. Stat. § 50-13
Restoration to owner if claimed, see Conn. Gen. Stat. § 50-12

GENERAL PROVISIONS

§ 34.01 LOST ARTICLES; STATE LAW ADOPTED.

The provisions of Conn. Gen. Stat. §§ 50-10 through 50-14 are adopted as permitted by Conn. Gen. Stat. § 50-9 and shall apply within the city to the finding of any article of the value of $1 or more. (1967 Code, § 13-11)

Hiring of Waterbury Residents on Certain Publicly-Funded Construction Projects

§ 34.10 TITLE.

The City of Waterbury Code of Ordinances §§ 34.10 through 34.22 entitled “Hiring of Waterbury Residents on Certain Publicly-Funded Construction Projects” shall also be known and may be cited as the “Good Jobs Ordinance” for the City.

(Ord. passed 5-13-2015)

§ 34.15 PURPOSE.

The purpose of this subchapter is to increase the benefit to the City of Waterbury and its residents from the city’s investment of public funds in certain publicly-funded construction projects to allow the city to recognize, as a benefit of such investment, a reduction in the amount of poverty and unemployment that would otherwise exist amongst its residents and also to help reduce the economic burden that would otherwise be placed on the city in having to provide alternative assistance to those residents who, but for their being hired pursuant to the provisions of this ordinance, would remain unemployed.

(Ord. passed 2-21-2012)

§ 34.16 FINDINGS.

The City of Waterbury finds that a substantial number of city residents are not being employed by contractors performing work on publicly-funded construction projects in the City of Waterbury and that the residents, therefor, are not receiving the maximum possible benefit from the City of Waterbury’s investment of public funds in the projects. The city further finds that:

(A) Recent research of hiring patterns on construction projects reveals a pattern of low hiring of residents in favor of nonresidents whose hiring is draining significant resources from the city.

(1) Only 14% of work hours performed on the construction of the $138,000,000 waste water treatment plant in 1998 - 1999 were performed by residents;

(2) Only 10% of laborers hours on city street paving in 1999 were performed by residents;

(3) With an average wage of $21 per hour on tax-funded city construction work as exemplified by the waste water treatment plant construction project, more than $13,000,000 in wages was lost by city residents on that project. Due to typical turnover of those funds among businesses

in the community, $13,000,000 - $26,000,000 of additional economic activity from the multiplier affect was lost to city businesses;

(4) As a result of the high percentage of noncity residents on construction projects, fewer Waterbury residents are able to be home owners, thus reducing property taxes to the city. For each resident who loses the opportunity to be a home owner, the city loses an estimated $2,000 in revenue per year.

(5) The migration of benefits caused by the high percentage of noncity residents on construction projects increases the burden on health care providers to provide uncompensated care to Waterbury residents without health insurance. Over the course of the waste water treatment plant project alone, for example, $5,000,000 in health and pension benefits were lost to city residents. If this subchapter were minimally met, it would double the wages and benefits going to city residents; and

(6) The extra cost to tax payers of the under-usage of apprentices on the project compared to what is permissible under state law is estimated at close to $1,000,000.

(B) Waterbury residents face higher rates of unemployment than other towns and cities in the region and state.

(1) The unemployment rate among construction workers who are residents of the city is 50% higher than the statewide unemployment rate among construction workers, and more than double the unemployment rate among construction workers in similarly-sized cities. For example, the Connecticut Department of Labor reports that in September 1999, 324 city residents applied for construction jobs at unemployment offices out of a total construction workforce of 3,600 (9%). Statewide, 3,908 applicants applied out of a total construction labor force of 63,800 (6%). In Danbury, 166 city residents applied out of a total construction workforce of 4,100 (4%).

(2) Since 1984 the city’s unemployment rate has been consistently higher than the rate of unemployment in the Naugatuck Valley region and the state. Unemployment is especially severe in some neighborhoods, which faced up to 19% unemployment, compared to the city’s 8% unemployment in the 1990 Census.

(C) Poverty is much greater and incomes are much lower in Waterbury than elsewhere in the region and state.

(1) According to the 1990 Census, 12.1% of the city’s residents lived below the poverty level, compared to 2.7% in the rest of the region and 6.8% statewide.

(2) Median 1990 household income was $30,533 in Waterbury compared to $41,721 for the state, and compared to $45,000 - $67,500 for towns in the rest of the Naugatuck Valley region. Estimates updating this data to 1997 show little change. Residents on average earn $10,000 less per capita than the statewide average of $28,000.

(3) Poverty is even more pronounced in some neighborhoods with up to 30% of their residents in poverty.

(4) The average wage for residents coming off of welfare in the city is one of the lowest in the State of Connecticut at $5.93 per hour.

(5) Over one-third of female headed households are under poverty.

(6) City children are among the poorest in the State of Connecticut, 61% of students city-wide are eligible for reduced price meals versus 25% statewide.

(Ord. passed 2-21-2012)

§ 34.17 DEFINITIONS.

For the purpose of this subchapter, the following definitions shall apply unless the context clearly indicates or requires a different meaning.

ADMINISTRATOR. The person(s), city department or agency designated by the Mayor of the city with the responsibility of overseeing the implementation and enforcement of this subchapter.

APPRENTICE. Definition as set forth in Conn. Gen. Stat. § 31-22m and any subsequent amendments approved by the Connecticut General Assembly is incorporated by reference herein.

BASIC SKILLED WORKER. A person who is currently enrolled in or having completed a training program administered by or on behalf of a legally organized labor union or a state-approved standardized craft training program. Specifically excluded from this definition is an APPRENTICE as defined by Conn. Gen. Stat. § 31-22m.

CITY. The City of Waterbury, Connecticut.

CITY FUNDS. Funds originating within the city pursuant to the city's taxing powers or authority to raise money through the sale of public bonds, permit tax abatements and enter into tax fixing agreements and tax increment financing agreements.

CONSTRUCTION. The process of building, altering, repairing, improving or demolishing any public infrastructure facility, including any public structure, public building or other public improvements of any kind to city property or other property or space in which the city has an interest. It does not include the routine operation, routine repair or routine maintenance of any existing public infrastructure facility, including structures, buildings or real property.

CONSTRUCTION PROJECT. Any project for which the primary purpose involves construction, as defined above, deconstruction, the remediation of any hazardous materials as defined in the Connecticut General Statutes, the rehabilitation or renovation of any structure or the creation, extension, reconstruction, reconditioning or rebuilding of any portion of a municipal infrastructure or public utility system.

CONTRACTOR. Any person hired by the city, directly or indirectly through an owner, to perform construction work on covered projects.

COVERED PROJECT. Any construction project taking place in the city with a value of $500,000 or greater, funded in whole or in part by city funds or funds administered by the city in accordance with federal or state grant or loan programs or any other federal or state programs. This definition of ***COVERED PROJECT*** shall include funds derived from the aforementioned federal or state grant, loan or other programs only to the extent permitted by federal and state law. The value of the projects shall equal the total consideration to be paid to all contractors stated in each contract pursuant to which contractors are performing construction work on covered projects.

FIRST-SOURCE REFERRAL PROGRAM. A program whose purpose includes but is not limited to, job training and the referral of qualified residents to contractors. The ***FIRST-SOURCE REFERRAL PROGRAM*** shall use the Good Jobs umbrella coalition of community groups and churches as a priority source for recruitment.

GOOD JOBS ADMINISTRATION BUDGET. The amount of funding required to oversee the implementation and enforcement of this subchapter in a given fiscal year.

HIRING GOAL. The 30% of the total worker hours on each covered project shall be performed by residents. At least 25% of construction trade jobs shall go to apprentices and/or basic skilled workers. At least 70% of all "new hires" (those workers hired by a contractor on a project, other

than existing employees and those referred by union hiring halls with prior seniority in the case of a union job) shall be "economically disadvantaged" individuals, defined as those earning less than 150% of the poverty line at the time of application. A minimum of 5% of the construction workforce labor hours will be local resident, minority artisans. A minimum of 5% of the construction workforce labor hours will be women. A minimum of 10% of the total work hours shall be allocated for minorities. Contractors are expected to employ a workforce that represents the population of the city.

LIAISON COMMITTEE. The committee established by the Board of Aldermen to monitor compliance with the provisions of this subchapter, and make recommendations to the Administrator and the Board of Aldermen regarding administration of this subchapter. The committee shall convene at a minimum of once every quarter in a space open to the public. The committee shall be comprised of two representatives of the Board of Aldermen one to be appointed by the President of the Board of Aldermen and one to be appointed by the Minority Leader on the Board of Aldermen, one representative from the Board of Education to be appointed by the President of the Board of Education, one representative of the Workforce Development Board, and five representatives who are appointed by the Board of Aldermen to represent: one contractor, one union, one civil rights group, one community and one Human Rights Commission. The committee members shall serve for a term of two years, and this nomination and selection process shall be used to fill any vacancy.

NEW HIRE. Those workers hired by a contractor on a project, other than existing employees, and those referred by union hiring halls with prior seniority in the case of a union job.

OWNER. The person who enters into a contract with a contractor for work on a covered project other than the city.

PERSON. An individual or a company, partnership, foreign or domestic corporation, partnership, limited liability company or other business entity.

RESIDENT. Any person whose domicile is the City of Waterbury, Connecticut.

ROUTINE MAINTENANCE. Simple, small-scale activities (usually requiring only minimal skills or training) planned and performed at regular intervals and being necessary to (1) extend the life of, or to delay or prevent the premature failure of, any plant or system or of any structure or structural system, building component or equipment; or (2) protect against normal wear and tear; or (3) maintain a suitable aesthetic appearance. Examples of ROUTINE MAINTENANCE may include, but are not limited to, lawn or grass cutting, hedge trimming, painting, caulking, sealing, plumbing or electrical repairs, carpet cleaning or other cleaning performed at regular intervals.

SUBCONTRACTOR. Any person hired by a contractor to perform construction work on covered projects.

(Ord. passed 2-21-2012; Ord. passed 8-19-2013; Ord. passed 5-13-2015)

§ 34.18 HIRING GOAL AND IMPLEMENTATION.

(A) All contractors and subcontractors performing work on covered projects shall make good faith efforts to satisfy the hiring goal.

(B) Any contractors or subcontractors that fail to meet the hiring goal shall be required to demonstrate to the Administrator's satisfaction that the contractor or subcontractor made good faith efforts to meet the hiring goal.

(C) (1) The Mayor of the city shall appoint an Administrator annually no later than June 30th to serve as the Administrator for the city's fiscal year following such appointment or within 30 days of a vacancy that might arise during any fiscal year. The foregoing not withstanding, an incumbent Administrator shall serve until their successor has been appointed and qualified. If, in the event of a vacancy, the Mayor fails to appoint a replacement Administrator within the first 30 days following the effective date of that vacancy, then the Board of Aldermen shall have the power to fill the vacancy provided that the Board does so:

(a) Within 30 days from the date upon which the power to make the appointment vested in the Board; or

(b) Prior to May 31st if the power to make the appointment vests in the Board on or after May 1st.

(2) Should the Board fail to make the appointment during any 30 day period it has to do so, or prior to May 31st if the power to make the appointment vests in the Board on or after May 1st, then the power of appointment shall revert to the Mayor. Thereafter, throughout the remainder of the then current fiscal year, the power to make the appointment shall alternate between the Mayor and the Board, at 30 day intervals, until an appointment is made or until June 1st at which point in time the power to make the appointment shall vest in the Mayor.

(D) The Mayor shall annually, prior to the adoption of the city's budget for the then next fiscal year and after consultation with the Administrator and all relevant city department heads, establish a Good Jobs Administration Budget for the then next fiscal year and the Mayor shall include a line item in his

annual budget submission to the Board of Aldermen sufficient to fund the Good Jobs Administration Budget. If, during the fiscal year in which the Mayor submits a given Good Jobs Administration Budget as part of his budget submission, the city has received as liquidated damages, pursuant to its contracts for covered projects, an amount greater than or equal to the Good Jobs Administration Budget as then submitted by the Mayor, the city shall be required to fund the Good Jobs Administration Budget as submitted by the Mayor and approved by the Board of Aldermen. To the extent possible, the cost required to oversee the implementation and enforcement of this subchapter for each project shall be funded and paid for through each project.

(Ord. passed 2-21-2012; Ord. passed 5-13-2015)

§ 34.19 REFERRAL MECHANISM.

(A) No less than four (4) weeks prior to the commencement of construction on covered projects, the contractor shall meet with the Administrator and provide the number of job positions to be created by the project by trade and the qualifications by job title. The Administrator shall make reasonable efforts to ensure that adequate job training is available to the extent necessary to achieve the hiring goal and that screening and referral mechanisms are in place so that contractors can access qualified residents. Additionally, the Administrator shall designate a first-source referral program for the city.

(B) In the event a contractor or subcontractor cannot satisfy the hiring goal through its own employees and union hiring halls, the contractor or subcontractor shall next utilize the first source referral program in order to satisfy the hiring goal. The contractor or subcontractor must wait five business days after a request has been submitted before advertising the position elsewhere.

(C) Qualifications required shall be only those relevant to the job. In satisfying the hiring goal, the contractor and any subcontractor shall employ all qualified persons referred by the first source referral program. The contractor and any subcontractor must utilize the first source referral program whenever its hiring needs increase and they are unable to comply with the hiring goals.

(Ord. passed 2-21-2012; Ord. passed 5-13-2015)

§ 34.20 MONITORING.

(A) The owner for a covered project shall require all construction contracts to comply with all provisions of this subchapter, and a copy of this subchapter shall be included with all contracts with contractors and subcontractors performing construction work on covered projects. This subchapter must be a contractual obligation in all contracts.

(B) All contractors and subcontractors performing construction work on covered projects shall submit to the Administrator weekly certified payroll records within five working days of the end of each payroll period. The records must show the person-hours on a craft-by-craft basis and identify the address, social security number, hiring date, ethnicity, gender and trade (journeyperson or apprentice) of all employees on the project. All reports must have an original signature and be signed by an authorized officer or employee of the company. Failure to comply with the provisions of this division (B) shall be deemed by the Administrator to be a violation of this subchapter and shall be subject to, and invoiced, liquidated damages on a weekly basis. Any willful misrepresentation contained in the information requested pursuant to this division (B) shall be deemed by the Administrator to be a violation of this subchapter and shall be subject to, and invoiced, liquidated damages on a weekly basis. The Administrator shall notify the City of Waterbury Department of Finance upon any violation of this subchapter. No portion of any invoice submitted by a contractor that is subject to liquidated damages shall be paid by the city until such time as all liquidated damages relating to that invoice have been paid to the city.

(C) Unless prohibited by federal, state or local law, all records in the city's possession shall be available for public inspection.

(D) The Administrator shall review all information provided pursuant to division (B) hereof and submit monthly reports to the Liaison Committee and to the Board of Aldermen summarizing the information.

(Ord. passed 2-21-2012; Ord. passed 5-13-2015)

§ 34.21 GOOD FAITH EFFORTS.

(A) Contractors shall be deemed to have made good faith efforts if they demonstrate to the satisfaction of the Administrator that they have done all of the following:

(1) Utilize the first source referral program to help satisfy the hiring goal;

(2) Notify the public in the city of the employment opportunities available on covered projects. The notification shall comprise a notice in a newspaper of general circulation in the city of employment opportunities, written notice to construction unions, community organizations and city high schools concerning same, and any other notice required by the Administrator. Contractors shall maintain records of responses to the notices received thereby. All notices must state that all qualified applicants will receive consideration without regard to race, color, religion, sex or national origin. The notice required by this division shall include a statement that the notice is provided pursuant to this subchapter;

(3) Maintain a file on the job site of the names and addresses of each worker referred by the first source referral program. The file shall indicate what action was taken with respect to each referred person, and if the person was not hired, the reasons therefore; provided, however, that this subchapter shall not be construed as requiring contractors to hire any persons who do not satisfy applicable job qualifications;

(4) Participate in State of Connecticut-approved local employment training programs in the city's area, or develop on-the-job training opportunities and participate and assist in any association or employer-group training program relevant to the contractor's employment needs;

(5) Regularly review and evaluate their personnel and promotional opportunities, encourage city residents to seek opportunities and establish a program to monitor compliance with this subchapter; and

(6) Utilize other means of obtaining employees who are residents of the city that are reasonably calculated to assist with achieving the hiring goals.

(B) Contractors shall provide the city with any documentation requested by the Administrator in order to establish compliance with this subchapter.

(Ord. passed 2-21-2012)

§ 34.22 CONTRACT REQUIREMENTS FOR COVERED SERVICES.

(A) This city shall include provisions in Chapter 38, entitled "Centralized Procurement System," of the Code of Waterbury mandating that each contract for a covered project, as that term is defined herein, awarded pursuant to Chapter 38 include provisions addressing compliance with the provisions of this subchapter by the contractor or contractors thereunder and by any subcontractor or subcontractors performing work related to any such contract.

(B) Whenever provisions are included in a contract for a covered project pursuant to division (A) of this section, they shall include provisions establishing liquidated damages for the failure of any contractor or subcontractor to comply with the provisions of this subchapter on a weekly basis. The liquidated damages shall be based on an estimate of the cost the city would incur in having to provide alternative employment opportunities, or alternative economic assistance, to those residents who would have benefited by the city's investment in the covered project if they had been hired by the contractor or subcontractor had they complied with the provisions of this subchapter.

(C) Whenever provisions regarding liquidated damages are included in a contract for a covered project pursuant to division (B) of this section, that contract shall, if applicable, also include provisions addressing the following matters:

(1) Weekly compliance reviews by the Administrator for the purpose of assessing compliance with the provisions of this subchapter, or the lack thereof;

(2) Requiring a separate certification of compliance by the Administrator prior to the payment of any funds by the city under any such contract;

(3) The weekly assessment and invoicing of liquidated damages per noncompliant contractor or subcontractor while said contract is executory;

(4) No portion of any invoice submitted by a contractor that is subject to liquidated damages shall be paid by the city until such time as all liquidated damages relating to that invoice have been paid to the city.

(Ord. passed 2-21-2012; Ord. passed 5-13-2015)

WATERBURY
DEVELOPMENT CORPORATION

Date: October 8, 2026

To: Michael DiGiovancarlo
President, Board of Aldermen

Members, Board of Aldermen

Mayor Paul Pernerewski

From: Zach Keith
Economic Development and Grants Manager

Subject: State of Connecticut Department of Energy and Environmental Protection Urban Green & Community Garden Grant Application - Curtin Park Renovation Project

Dear Honorable Members of the Board of Aldermen,

I request approval to apply for the State of Connecticut Department of Energy and Environmental Protection's Urban Green & Community Garden Grant for the renovation of Curtin Park.

In 1973 the City of Waterbury purchased the property on which Curtin Park is located. In 1974 the City constructed a park, naming it in honor of long time Parks Department Superintendent James Curtin. The park was originally designed with a playground, basketball courts, tennis courts, and a baseball field that could be flooded during winter months for ice skating.

The park, however, is in great need for improvements:

The park has overgrown trees and vegetation throughout which does not provide a welcoming entrance. The park's most recent improvement was a splash pad in constructed in 2018. The balance of the park has not seen investment in many years. The tennis courts currently have trees growing through the asphalt surfaces, the basketball courts need to be resurfaced, the baseball field needs to be renovated, as well as, the playground area.

Waterbury Development Corporation (WDC) believes that through pruning and removal of overgrown vegetation the park will become more welcoming and provide an additional amenity with the addition of a walking path around the park. WDC proposes that the tennis courts would be removed and replaced with a grass field. The swings and surfacing at the playground will be replaced.

In addition, there is currently a growing interest in soccer and therefore WDC proposed incorporating soccer goals at the baseball field. The limited lighting and park signage at both entrances to the park will be replaced. New trash cans and benches will also be added to the park.

Curtin Park, is located at 84 Springbrook Road, a short walk from 167 Springbrook Road where the Waterbury Housing Authority operated a HUD complex housing 56 families and 110 children The park's southern boundary is at the edge of the new 3.2 million square foot Amazon distribution center scheduled for completion summer 2027. Lastly, the park is a half-mile walk from one of Waterbury's K-8 John G. Gilmartin School.

At this time, the estimated costs for this Project is $1,099,855.68. This CT DEEP Grant requires in general a 50% match. This grant program will not fund active park features, such as work to the swings, baseball field, or basketball courts. However, the program has the flexibility to consider, at DEEP's discretion, non-eligible project costs as contributing to the match component of the grant. If awarded this grant, it is anticipated that the grant portion will be $547,896.34 and the City's match will be $551,959.34 and would come from Local Capital Improvement Funds.

Please find attached referenced Grant Application. This will be updated with the below resolution and the corresponding Project Authorization Letter that will be included with the final Grant Application. In addition, CT DEEP has requested the following resolution be approved:

RESOLUTION:

Be it resolved that WDC staff is authorized to prepare an application for the CT DEEP Urban Green and Community Garden Grant Program for the Curtin Park Renovation Project and to submit the grant application electronically to CT DEEP on behalf of the City of Waterbury. Should this grant be awarded to the City of Waterbury, the necessary grant agreement would be presented to the City of Waterbury Board of Aldermen for consideration.

WDC staff will be present at your meeting for any questions the Board may have.

Connecticut
Department of Energy & Environmental Protection

OFFICE OF THE COMMISSIONER
LAND ACQUISITION & MANAGEMENT UNIT

Application Form: DEEP Urban Green & Community Garden Grant Program
Due: Friday, December 4, 2026

Please complete this form and include it in an application package with supporting materials for submission to DEEP. Directions for submitting your complete application package are found at Section XI at the end of this Form.
Your application package will be used to evaluate and score the proposed project for grant funding. Narrative responses should be on a separate document and clearly indicate the application section being addressed. Responses to the items on this form should be brief, factual, accurate, and relate directly to the grant program eligibility and statutory requirements, standards, and criteria. Project proposals that do not meet program eligibility, or applications which are found insufficient due to missing and/or inaccurate information, will not be evaluated and may be rejected by DEEP from further review or penalized by requiring any awarded funding surrendered.

Section I. APPLICANT & PROJECT INFORMATION

Project Name:	Curtin Park Renovation		
Project Total Cost:	$1,099,855.68	**Grant Funding Amount Requested:**	$547,896.34
Project Town:	Waterbury		
Project Address(es):	84 Spring Brook Road		

Applicant Name:	City of Waterbury		
Applicant Address:	235 Grand Street	**Applicant FEIN #:**	06-6001900
Municipal CEO Name (Municipal Applicants):	Paul K Pernerewski Jr	**Title:**	Mayor
Organization Head or Signatory Authority (Nonprofit Applicants):	James Nardozzi	**Title:**	Executive Director
Application Preparer Name:	Zachary Keith	**Title:**	Economic Development & Grants Manager
Contact Email:	keith@wdconline.org	**Contact Phone:**	203-346-2607 ex 7287

Section II. ELIGIBILITY

1. Project will take place in a Distressed Municipality (§32-9p) Targeted Investment Community (§32-70), within or adjacent to a Environmental Justice Community census block (§ 22-20a).	■ Yes ☐ No
2. Project will take place on land acquired by eminent domain. *If "**yes**", the application will not be evaluated for award.*	☐ Yes ☐ No
3. Project will take place on land owned by a Municipality.	■ Yes ☐ No
4. Project will take place on land owned by a Non-profit Organization registered with the Connecticut Secretary of the State.	☐ Yes ☐ No
5. Applicant is a municipality with a Plan of Conservation & Development less than 10 years old or has been granted a waiver by the Office of Policy and Management. *If "**no**", the application will not be evaluated for award per Public Act 24-132.*	■ Yes ☐ No
6. Applicant is a Non-profit Organization Registered with the Connecticut Secretary of the State. *If "**yes**," be sure to include as part of application the REQUIRED SUPPORTING MATERIALS listed below.*	☐ Yes ☐ No
7. Applicant is a Municipality working with a Non-profit "Co-Sponsor" who will manage a project on Municipal owned land. *If "**yes**," be sure to include as part of application the REQUIRED SUPPORTING MATERIALS listed below.*	☐ Yes ☐ No
8. Applicant has funding or expense sources available to meet required 50% match share of total project cost.	☐ Yes ☐ No
9. Project will create, enhance, or restore a community green space in an Environmental Justice Community, Targeted Investment Community or Distressed Municipality.	☐ Yes ☐ No
10. Project will be open and accessible to the public. *If public access is not clearly shown, the project will not be evaluated for an award.*	☐ Yes ☐ No
11. Grant funding will not be for intensive recreational and/or commercial uses. (*i.e., athletic turf fields, indoor facility, washing facility, splash pad, swimming pool, dog park, playground, etc.*).	☐ Yes ☐ No
12. Grant award expenses will not be used for administrative, carrying, and non-programmatic costs. *(i.e., salaries, organizational liability insurance, etc.).*	☐ Yes ☐ No

Required Supporting Materials for Non-Profit Organizations:

■ **Attachment A**	Current IRS 501(c)(3) Determination Letter as evidence the Non-profit Organization is a duly authorized 501(c)(3).
■ **Attachment B**	Copy of Certificate of Legal Existence from the Secretary of State evidencing the Non-profit is registered with the Secretary of the State's Office.
■ **Attachment C**	Copy of Charitable Solicitation Registration with the Department of Consumer Protection as evidence the Non-profit Organization is verified as active.
■ **Attachment D**	For projects to be managed by a Non-profit Organization at Municipal owned land: Copy of Letter of Approval signed by Municipal CEO or governing legislative body supporting the Co-sponsored project.
■ **Attachment E**	For projects to be managed by a Non-profit Organization at Municipal-owned land: Copy of project management agreement drafted or fully signed by the Municipal CEO.

Section III. PROJECT DESCRIPTION

Considering the eligibility requirements, standards, and criteria outlined in Section II, prepare a description of the project proposal, including responses to the following:

1. Site Location, Use, & Environmental Justice Communities	Describe the location of the site and its current, and historical – if known - uses. If the site is within or adjacent to an Environmental Justice Community (§ 22a-20a) that is not also within a Distressed Municipality or Targeted Investment Community, provide a screenshot of the site's location as shown on DEEP's Environmental Justice Communities Map. Steps for saving a screenshot are as follows: (1) Go to DEEP's Environmental Justice Communities Map. (2) Type property address into the top-left search box. Press "enter" to zoom to address. (3) Right-click on screen. (4) Select "Print…" (5) Save screenshot as Adobe PDF to your computer.
2. Site Use & Public Access	Describe what types of activities will be offered at the site and by the project, how it will be opened to the general public, and if public events and community gatherings will be permitted. If fees will be charged, you must describe the fee structure and how funds will be managed.
3. Plan Design & Construction	Describe: - How the site is presently used, existing physical conditions, and the proposed new work to be performed. - Whether a landscape architect, design engineer, or other professional consultant is being engaged to help plan the project. - Who will perform the work (e.g., Municipal Department of Public Works, Parks & Rec Department, Commission, or volunteers). - Whether there is an identified co-sponsor that will act as project manager and describe their exact role. - Where the DEEP funding acknowledge signage will be placed and how the site will be advertised as open to the public.
4. ADA Accessibility	Describe how ADA and other disability-related standards and codes will be integrated into the design, physical landscape and structural components of the project (i.e. parking, gates, viewing platforms, trails, etc.):
5. Timeframe for Completion	Describe how the proposal will be completed within 5 years.

Required Supporting Materials:

☐ **Attachment F**	General Location Map
☐ **Attachment G**	Screenshot of Site Location as Shown on DEEP's Environmental Justice Communities Map (if applicable)
☐ **Attachment H**	Property Boundary Survey (if available)
☐ **Attachment I**	Site Existing AND Proposed Conditions Plan Set
☐ **Attachment J**	General Public Access Map (Access points, parking areas, etc.)

Section IV. SITE OWNERSHIP

Provide deed verification that the site at which the project will take place is owned in fee title by a Municipality or Non-profit Organization and is free from liens or encumbrances which would prohibit public access or prevent its use as a community garden or passive recreational green space. If the site where the project would take place prohibits public access, then the project will not be evaluated for a grant award.

Required Supporting Materials:

☒ **Attachment K**	Complete Copy of Property Deed

Section V: Brownfields

Per C.G.S Section 32-760, "Brownfield" means any abandoned or underutilized site where redevelopment, reuse or expansion has not occurred due to the presence or potential presence of pollution in the buildings, soil or groundwater that requires investigation or remediation before or in conjunction with the redevelopment, reuse or expansion of the property.

The Urban Green & Community Garden Grant Program supports the creation or expansion of community greenspaces on remediated or nearly remediated brownfield sites. Eligibility is restricted to sites where remediation is complete or will be completed in a reasonable amount of time after submission of this grant application. Projects must meet the eligibility criteria noted in Section II. Sites subject to Environmental Use Restrictions incompatible with a publicly accessible greenspace will not be considered for funding.

1. Project area overlaps with an existing or previously identified brownfield site. ***If "No" skip to Section VI.***	☐Yes ☒ No
2. Project area is fully remediated *If "**No**", when are remedial activities expected to be complete?*	☐Yes ☐ No Estimated Completion Date:

Applicants proposing a project on a former or existing brownfield site must submit documentation that evidences, to the satisfaction of DEEP staff, that remediation is complete or will be completed by the date indicated above.

Required Supporting Materials if a brownfield project:

☐ **Attachment L**	Narrative describing prior assessment and remedial activities and any use restrictions on the site.
☐ **Attachment M**	Final Verification Form, No Audit Letter, or other documentation supporting the indicated status of remedial activity.

Section VI. COMMUNITY NEED & LETTERS OF SUPPORT

Applicants must demonstrate through letters of support that they performed local public outreach and received meaningful community input on proposed project need and design. Letters of support may come from community organizations, municipal boards and departments, state legislators, and Regional Councils of Government. Describe the local and public interest expressed for the project and how the public and local community organizations have been involved in the planning and design processes. Describe what the project will accomplish and how it benefits the community, including why a public community garden or passive recreational green space would be a welcomed addition to the area:

- What other recreational opportunities are available within proximity?
- What major population center(s) and neighborhood(s) are within the project service area?
- What is the municipal population density and census tract?

Explain whether the project has municipal board and commission support (e.g., Board of Selectmen or Town Council, Board of Education, Department of Planning & Zoning, Department of Public Works, Department of Parks/Recreation, Agriculture Commission, Conservation/Open Space Commission, Inland Wetlands/Watercourses Agency), including how and when the decision to undertake the project was made.

Supporting Materials:
Letters of support should be formal letters on the authoring entity's letterhead (where applicable). They should address their specific support for the applicant and the project named in the UGCG application.

Letters from at least <u>two</u> of the following three categories must be provided:

☐ **Attachment N**	Municipal Support Letters (*e.g., Board of Selectmen or Town Council, Board of Education, Department of Planning & Zoning, Department of Public Works, Department of Parks/Recreation, Agriculture Commission, Conservation/Open Space Commission, Inland Wetlands/Watercourses Agency*)
☐ **Attachment O**	Regional Council of Government (RCOG) or Planning Agency (RPA) Support Letters
☐ **Attachment P**	Community Organization Support Letters

Section VII. OPERATION, MAINTENANCE, & STEWARDSHIP CAPABILITY

Describe how the project work will be managed and how the project area will be stewarded and maintained going forward. If there is an identified co-sponsor project manager describe the organization's role and the experience and positions of the personnel to be involved.

Required Supporting Materials:

☐ **Attachment Q**	Complete copy of a project management agreement, or other documentation signed by the Municipality and its Co-Sponsor (if applicable)

Section VIII. FUNDING MECHANISMS & BUDGET NARRATIVE

This is a matching grant program covering 50% of the total project cost. This program accepts in-kind contributions (e.g., staff/volunteer time and donated materials). Describe the necessary expenditures to be incurred by the proposal, how much funding is being requested from DEEP, and how the required 50% match will be met, including responses to the following:

1. Total Project Cost	- Provide the total project cost and explain expenditures to be incurred towards completing the proposal.
2. Matching Sources	- Document the source of matching funds to complete the project. - Disclose all other private, State, and/or Federal Government funding sources including other grants you are applying for.
3. Budget Table	Clearly show total cost and line-item units and unit costs, DEEP grant funding being requested, and sources of 50 percent match. In developing a table, please refer to Frequently Asked Questions for eligible expenses which may be reimbursed by DEEP under this program.

Required Supporting Materials:

☒ **Attachment R**	Budget Table
☒ **Attachment S**	For Municipal Applicants: Municipal Resolution Certified by Town or City Clerk stating municipal authorization for expenditure of funds and that the municipal CEO may enter into a grant contract agreement with DEEP. Resolutions should include incumbency statement identifying the municipal CEO signatory's duration of service.
☐ **Attachment T**	For Non-profit Organization Applicants: Corporate Resolution certified by Corporate Secretary or keeper of the records indicating that the President of the Non-profit Organization can sign and enter into grant documents.

**** APPLICANTS BE AWARE: Reimbursable project costs cannot be incurred prior to a fully executed contract agreement between the applicant and CT DEEP. Costs incurred before contract completion can be eligible (with the approval of DEEP program Staff) as Matching Sources but will not be reimbursed by the UGCG grant award.****

Section IX. CONSISTENCY WITH PLANS OF RECREATION, CONSERVATION & DEVELOPMENT

Citing sections or chapters of such plans, briefly explain how the project proposal is consistent with the municipality's adopted Plan of Conservation and Development and/or public recreational plans, any applicable regional plans of recreation, conservation and development, or other relevant State resource Plans.

Required Supporting Materials:
Excerpts to satisfy Attachment U and V are required.

☒ **Attachment U**	Excerpts from Local Plan of Conservation & Development which is Less than 10 Years Old
☒ **Attachment V**	Excerpts from Regional Plans of recreation, conservation and development which are less than 10 years old and/or other relevant State plans

Section X. PAST GRANT COMPLIANCE

1. Has the applicant received any UGCG grant awards in the past?
   ☐ Yes ☐ No

If "yes," please provide the following information for each past awarded project:

(a) UGCG Grant Number;
(b) Project Name;
(c) Whether the project was completed within the 5-year grant contract active period;
(d) Grant award balance remaining (if any);
(e) Status update, including whether the site is no longer being operated or maintained for the original project purpose(s).
(f) If the project site is no longer being used, please explain why.

If previous UGCG grants are not fully compliant, provide a narrative explanation for why, as well as a detailed timeline for the applicant to regain compliant status.

Additionally, applicants must provide proof of submission of a State Single Audit or Exemption Form (whichever is appropriate) for the preceding 3 years.

Required Supporting Materials:

☐ **Attachment W**	Three (3) color, clearly-lit photographs in JPEG format of each past UGCG awarded project sites in their existing current state of condition.
☐ **Attachment X**	One (1) color, clearly-lit photograph of the required sign or plaque recognizing State funding at each past UGCG awarded project sites in its existing current state of condition.
☐ **Attachment Y**	Proof of submission of State Single Audit or Exemption Form for preceding 3 years

Section XI. Submission of Application

Submit via email to Cameron.Clegg@ct.gov the complete application package consisting of:

- This Application Form; and
- A separate document containing compiled responses to Sections III through X of this Application Form; and
- All required supporting material Attachments A through Y, with attachments clearly indicated in the document name.
- Please submit this application, the compiled responses, and all attachments as separate, clearly labeled documents for ease of review.
    - Document name format: *Applicant Name*_UGCG 2026_*Document Name*
    - Send across multiple emails as necessary, or
    - Email a link and access to a data sharing site (OneDrive, Sharepoint, Dropbox, etc.)

Section II Eligibility:

The project is located within a distressed municipality and an environmental justice block on land owned by the City of Waterbury. The City of Waterbury is applying for this grant application with Waterbury Development Corporation. Waterbury Development Corporation will manage the project on behalf of the City of Waterbury pursuant to a Project Authorization Letter which is subject to the Master Municipal Agreement between the City of Waterbury and the Waterbury Development Corporation. Supporting this section of the application are attachments A, B, D, and E.

Section III Project Description:

1. Site Location, Use, and Environmental Justice Communities: Describe the location of the Site and its current and historical known uses:

Curtin Park is located at 84 Spring Brook Road Waterbury CT 06706 located in a distressed municipality and environmental justice community. The City of Waterbury is the fifth largest city in the State. Waterbury has approximately 115,000 residents and 45,663 households. The median income for a household in the City is $51,886. Curtin Park is located is census tract 3515 and is zoned RL.

The park is located within the Gilmartin Neighborhood. The City of Waterbury purchased the property for $57,326.30 on March 21, 1973. The park was constructed in 1974 and named in honor of long time Parks Superintendent James Curtin. The park was originally designed with a baseball field that could be flooded for skating, basketball courts, tennis courts, and a playground. The parks southern boundary is the edge of the new Amazon Distribution Center, as well as, a City of Waterbury Housing Authority complex, the other three borders of the property are all residential.

Directly south of the park is the Amazon warehouse which is currently under construction and slated to open in June 2027. The new Amazon warehouse will be 3.2 million square feet and bring an estimated 1,000 jobs. In addition, within a half a mile walk from the park is John G Gilmartin K-8 School which was built in 2010. The Waterbury Housing Authority owns a large multi-family complex at the end of Spring Brook Road, the area around the park is all residential. This park has a great need for improvements.

2. Site Use and Public Access: Describe what type of activities will be offered at the site and by the project, how it will be opened to the general public, and if public events and community gatherings will be permitted. If fees will be charged, you must describe the fee structure and how funds will be managed.

   The property has been a public park since 1974 and will continue to be open and free of charge to the public as it has always been.

3. Plan Design and Construction:
   - Describe how is the site presently used, existing physical conditions, and the proposed new work to be performed.

   The park is and has been a public park since 1974. The park has overgrown trees and vegetation throughout which does not provide a welcoming entrance. The park's most recent improvement was its splash pad in 2018. The balance of the park has not seen investment in many years. The

tennis courts currently have trees growing through the surfaces, the basketball courts need to be resurfaced, the baseball field needs to be renovated, as well as, the playground area. The park also has a great need for tree and vegetation clearing throughout which will help make the park more welcoming through the addition of a walking path around the park which will add another amenity for the neighbors. The tennis courts will be removed and replaced with open grass field. The swings and surfacing at the playground will be replaced. In addition, there is currently a growing demand for soccer fields in Waterbury partially due to the growing Hispanic population in the City, therefore we will add soccer goals at the baseball field. The limited lighting and park signage at both entrances to the park will be replaced. Trash cans and benches will also be added back to the park as currently there are none.

- Whether a landscape architect, design engineer, or other professional consultant is being engaged to help plan the project.

If awarded the grant, WDC on behalf of the City of Waterbury will issue a public competitive Request for Proposals for an Architect/Engineer to design the plans and specifications for the Curtin Park renovations. The WDC/City will review the proposals received and will award to the most qualified candidate with the best pricing.

- Who will perform the work (e.g. municipal Department of Public Works, Parks and Recreation Department, Commission or volunteers)?

Once the drawings and specifications are completed a public competitive bid for a contractor will be advertised for the park renovations. WDC shall comply with all State of Connecticut public competitive bidding requirements.

- Whether there is an identified cosponsor that will act as a project manager and describe their exact role.

  Waterbury Development Corporation through a Project Authorization Letter, which is subject to a Master Municipal Agreement, will manage the project design and construction on behalf of the City.

- Where the DEEP funding signage acknowledge will be placed and how the site will be advertised as open to the public.

  During Construction the CT DEEP signage will be placed in the park facing Spring Brook Road allowing the public to easily see the funding partners.

4. ADA Accessibility: Describe how ADA and other disability-related standards and codes will be integrated into the design, physical landscape, and structural components of the project (i.e. parking, gates, viewing platforms, trails, etc.):

   As part of the project an ADA compliant walking trail will be installed around the Park. The park is within an urban community and the gates at either end will be replaced; there are no viewing platforms. There are no restricted areas of the park as it is a public park.

5. Timeframe for Completion: describe how the project will be completed within 5 years:

   Upon award of the grant, the WDC will advertise for an architect/engineer to prepare drawings and bid specifications for the work outlined above. Following completion of the drawings and bid specifications, the WDC will advertise a public competitive bid for a contractor to perform the scope of work identified. It is the intent of WDC to fully complete this project within two years.

For support of section III please find attached to this application: attachments F, G, H, I, and J.

Section IV Site Ownership:

As proof of site ownership for attachment K, please find attached the property card and City of Waterbury land volume 1082 page 254.

Section VI Community Need and Letters of Support:

WDC has received several letters of support, from various nonprofits, the NVCOG, The Waterbury Housing Authority, Gilmartin Neighborhood Association, Waterbury Park's Board, and the City Planner which are attached to the grant application. These letters of support are found in attachments N, O, and P.

The community supports the renovation to Curtin Park as the park is in need of renovations for public safety and continued use. These renovations will benefit these organizations and the City at large. The decision was made to undertake this project to help improve the neighborhood and this grant is necessary to be able to complete the project. As an architect/engineer is not under contract at this time public involvement will be completed during the design phase.

Section VII Operations, Maintenance, and Stewardship Capability:

Since 1951, WDC has been the designated economic agency for the City of Waterbury. The Project will be managed by Waterbury Development Corporation on behalf of the City of Waterbury through a Project Authorization Letter (attached as Attachment Q) which is subject to a Master Municipal Agreement (attached as attachment Q). The Waterbury Development Corporation has managed several park renovation projects over the years including: The Green, Library Park, Fulton Park Pool, Hamilton Park Pool and Promenade, Washington Park Pool; as well as, the creation of two new parks in the City: 909 Bank Street and 313 Mill Street. Following completion of the project, the Waterbury Parks Department, which maintains all of the public parks in the City, will continue to maintain the Curtin park as it has since 1974.

Section VIII Funding Mechanism and Budget Narrative:

The Curtin Park Renovation Project is estimated to cost $1,099,855.68 of which the grant match is $547,896.34 and the City will be contributing $551,959.34. This cost estimate includes the design and engineering of the renovation, the renovations itself as further described in Appendix A Scope of Work and the Attachment R Curtin Park Renovation Project Budget Table. The City's portion is anticipated to

come from fiscal year 28 local capital improvement, available July 1, 2027. Please also find attached as support, Attachment S-Municipal Resolution certified by the City Clerk.

Section IX Consistency with Plans of Recreation, Conservation, and Development:

According to the Adopted Plan of Conservation and Development (2026-2036), the City's Bureau of Park's and Golf Courses, under the Department of Public Works manages nearly 1,100 acres of municipally owned land of which 643 acres was for public parks with the rest being for golf courses. Since 2016, 909 Bank Street Park and 313 Mill Street Park have been created. On page 53 of the Plan of Conservation and Development there are five goals listed for maintaining and improving the Public Parks System which include: 1. Continue to complete upgrades to Hamilton Park using a phased approach. 2. Rehabilitate and maintain existing parks, playgrounds, recreation centers, and golf courses. 3. Continue to make accessibility improvements to City parks and playgrounds to ensure that they are accessible to all. 4. Continue to plan for the future Jackson Street Park as part of the redevelopment efforts in the Freight Street District. And 5. As part of the Greenway planning and design efforts, incorporate river access and pocket parks into the greenway system, where feasible.

In applying for this funding to renovate Curtin Park, it is consistent with the Plan of Conservation and Development calling for the renovation and maintenance of the City's Parks. Please see Attachment U-City Plan of Conservation and Development, as well as, a letter of support from City Planner Robert Nerney which also documents that the park renovation is consistent with the City Plan of Conservation and Development.

In support of the application please also find attached current photos and captions documenting the current conditions of the Park, as well as, an in house created conceptual plan of the renovated park.

Section X. Past Grant Compliance:

The City was awarded a UGCG grant for the Hayden Homestead Park on June 4, 2026. The assistance agreement has not yet been executed as of October 8, 2026 and therefore no funds have been expended to report on.

APPENDIX A
SCOPE OF WORK

Project: The City of Waterbury (the "Contractor") shall construct in collaboration with its co-sponsor-Waterbury Development Corporation, renovations to an existing park (Curtin Park) which is in an environmental justice community, is municipally-owned, operated and maintained parcel in Waterbury (hereinafter the "Project" or "Project Site").

Description: Following the execution of this Contract, the Contractor in collaboration with its Co-sponsor agrees to complete the Project as outlined in this Scope of Work, subject to the following terms and conditions:

1. Project Activities/Deliverables:

A. The Contractor, shall:

(1) Procure and contract with the qualified Architect/Engineer to prepare the plans and specifications for the park renovations

(2) Publicly advertise the plans and specifications for the Curtin Park Renovation

(3) Mobilization and demobilization

(4) Surveying and Layout

(5) Clearing and grubbing -Prune and remove overgrown trees and vegetation

(6) Demolition and disposal of tennis court surfacing

(7) Removal of fences around tennis courts

(8) Removal of fence around park except behind baseball field and north fence

(9) Demolition and disposal of existing asphalt

(10) Cleaning site garbage

(11) Removal and installation of new swings and safety surfacing
(12) Resurface basketball court
(13) Splash pad modification
(14) Baseball field restoration and municipal goal and net installation
(15) Existing light pole rework
(16) Existing storm drainage rework and cleaning
(17) Existing bridge restoration and railings

(18) New Driveway entrance

(19) Drinking fountain

(20) Install pathways in the park

(21) New Fence around basketball courts

(22)Entrance signage

(23)Swing style gate

(24)Steel Heavy Duty Municipal goal

(25)Rock removal

(26)Fencing

(27) Picnic Benches

(28)Benches

(29)Trash cans

(30)Landscaping

PROJECT FINANCIAL BUDGET

Expenses	Cost/Value	DEEP Grant Award	Match Share	Match Source
Site Work				
Clearing and Grubbing 2,800 sq feet	$68,375	$44,187.50	$44,187.50	Municipality
Demolition and disposal of tennis courts	$68,375	34,187.50	34,187.50	Municipality
Removal of fences at existing tennis courts	$12,955	6,477.50	6,477.50	Municipality
Mobilization and demobilization	$11,375	5,687.50	$5,687.50	Municipality
Surveying and Layout	$12,375	$6,187.50	$6,187.50	Municipality
Removal of Fence around park	$17,455	$8,695.47	$8,695.47	Municipality
Demolition and disposal of existing asphalt	$18,375	$9,187.50	$9,187.50	Municipality
Cleaning site of garbage debris	$9,875	$4,937.50	$4,937.50	Municipality
Removal and installation of 2 new swings including safety surfacing	$20,375		$20,375	Municipality
Re-surface 2 basketball courts	$58,375		$58,375	Municipality
Splash pad modification for ground mount activation	$11,375		$11,375	Municipality

Ballfield restoration allowance	$23,375		$23,375	Municipality
Existing storm drainage rework and cleaning	$12,375	$12,375		
Existing bridge restoration and railings	$18,375	$18,375		
Driveway entrance 1200 sf	$16,875	$16,875		
New Asphalt Walking Path	$99,675	$49,837.50	$49,837.50	Municipality
New Fence around basketball court 2 sides	$26,855		$26,855	Municipality
Rock Removal Allowance	$15,000	$15,000		
5’ Tall Galvanized Chain Link Fence	$26,883		$26,883	Municipality
Site Furnishings				
Metal Benches	$58,475	$29,237.50	$29,237.50	Municipality
Trash Receptacles	$39,375	$19,687.50	$19,687.50	Municipality
Metal Picnic Tables	$19,125	$9,562.50	$9,562.50	Municipality
Existing light pole rework	$15,375	$15,375		
Drinking Fountain	$11,375	$11,375		
Steel Heavy Duty Municipal Goals	$14,575		$14,575	Municipality
12 Ft Steel swing gates	$20,375		$20,375	Municipality
Park signage	$22,375	$11,187.50	$11,187.50	Municipality
Plants & Landscaping				
Landscaping and seeding 30,000 sq feet	$58,375	$58,375		
Landscaping and Seeding of 20,000 sq feet former Tennis court area	$65,375	$65,375		
Design & Planning				
Architect/Engineer	$99,986.88	$49,993.44	$49,993.44	Municipality
Contingency 10%	$121,68.71	$60,844.36	$60,844.36	Municipality
TOTALS:	**$1,099,855.68**	**$547,896.34**	**$551,959.34**	

Attachment A

IRS Department of the Treasury
Internal Revenue Service
P.O. Box 2508
Cincinnati OH 45201

In reply refer to: 0248164841
Jan. 13, 2011 LTR 4168C E0
06-1549006 000000 00
00012077
BODC: TE

WATERBURY DEVELOPMENT CORPORATION
24 LEAVENWORTH ST
WATERBURY CT 06702-2121

RECEIVED
JAN 18 2011

012072

Employer Identification Number: 06-1549006
Person to Contact: B.HALL
Toll Free Telephone Number: 1-877-829-5500

Dear TAXPAYER:

This is in response to your Jan. 04, 2011, request for information regarding your tax-exempt status.

Our records indicate that you were recognized as exempt under section 501(c)(3) of the Internal Revenue Code in a determination letter issued in APRIL 2000.

Our records also indicate that you are not a private foundation within the meaning of section 509(a) of the Code because you are described in section(s) 509(a)(1) and 170(b)(1)(A)(vi).

Donors may deduct contributions to you as provided in section 170 of the Code. Bequests, legacies, devises, transfers, or gifts to you or for your use are deductible for Federal estate and gift tax purposes if they meet the applicable provisions of sections 2055, 2106, and 2522 of the Code.

Please refer to our website www.irs.gov/eo for information regarding filing requirements. Specifically, section 6033(j) of the Code provides that failure to file an annual information return for three consecutive years results in revocation of tax-exempt status as of the filing due date of the third return for organizations required to file. We will publish a list of organizations whose tax-exempt status was revoked under section 6033(j) of the Code on our website beginning in early 2011.

Attachment B

Secretary of the State of Connecticut
Certificate of Legal Existence

Certificate of □e□a□E□istence Certificate

Date Issued□Monday, Au□ust □7, 2026 3□□2 PM

I, the Connecticut Secretary of the State, and keeper of the sea□thereof, do hereby certify, that the certificate of incorporation for the be□o□ domestic □on-Stock corporation □as fi□ed in this office.

A certificate of disso□ution has not been fi□ed, the corporation has fi□ed a□□ annua□reports, and so far, as indicated by the records of this office, such corporation is in e□istence.

Business Details

Business □ame	WATERB□RY DEVE□OPME□T CORPORATIO□
Business A□EI	□S-CT.BER□0□□□□□8
Formation Date	09/20/□996

Secretary of the State

Attachment C

CPL-03 Rev 06/13

STATE OF CONNECTICUT
DEPARTMENT OF CONSUMER PROTECTION

This is your registration certificate confirming your Public Charity Exemption status. This registration allows the organization below to solicit charitable donations including fundraising in Connecticut. This registration is non-transferrable and cannot be used by any other organization. Do not attempt to make any changes or alter this certificate in any way.

A registration from this Department does not make donations to your organization tax deductible. The IRS determines the tax deductible status of an organization.

You must contact the Public Charities Unit at dcp.publiccharities@ct.gov when eligibility no longer exists. Please be sure to keep your information with our office current. You can update your email, address or print a duplicate certificate by logging into your account with your User ID and Password at www.elicense.ct.gov.

Mailing address:

WATERBURY DEVELOPMENT CORPORATION
83 BANK STREET
WATERBURY, CT 06721

Email on record:

NARDOZZI@WDCONLINE.ORG

1151724

STATE OF CONNECTICUT ✦ DEPARTMENT OF CONSUMER PROTECTION

Be it known that

WATERBURY DEVELOPMENT CORPORATION
83 BANK STREET
WATERBURY, CT 06721

is certified by the Department of Consumer Protection as a registered

PUBLIC CHARITY-EXEMPT FROM FINANCIAL REQUIREMENTS

Registration #: CHR.0070182-EXEMPT
Effective Date: 03/23/2026

Claimed exemption does not expire

Verify online at www.elicense.ct.gov

Bryan T. Cafferelli, Commissioner

Attachment D & E

MASTER MUNICIPAL AGREEMENT

BETWEEN

CITY OF WATERBURY

AND

WATERBURY DEVELOPMENT CORPORATION

Dated: February 12th, 2014

TABLE OF CONTENTS

Page #

1. DEFINITIONS

1.1 Administrator, Administration, Administrating 3, 4
1.2 Designated Program..... 4
1.3 Project or Program Authorization Letter (PAL)..... 4

2. DESIGNATION OF PROGRAM ADMINISTRATOR AND PROJECT MANAGER

2.1 Designations..... 4
2.2 Prior Designations..... 4
2.3 PAL Approval..... 4, 5
2.4 Revisions PAL..... 5
2.5 Content of PAL..... 5

3. CONDUCT

3.1 WDC Performance..... 5
3.2 Services..... 5
3.3 City Responsibility..... 6
3.4 Assignability..... 6
3.5 Draw-Downs..... 6

4. SUBCONTRACTS

4.1 Monitoring..... 6
4.2 Content..... 6

5. PROCUREMENT STANDARDS AND SELECTION PROCESS:

5.1 Standards and Selection Process..... 7

6. COMPENSATION

6.1 Full and Complete Payment..... 7
6.2 Fee Schedule..... 7
6.3 Limitation of Payment..... 8
6.4 Record keeping..... 8
6.5 Reimbursement..... 8
6.6 Proposal Costs..... 8
6.7 Payment for Services..... 8
6.8 Liens..... 8
6.9 Review of Work..... 9

7. HOLD HARMLESS

7.1 WDC Indemnify..... 9

7.2 Claims..... 9
7.3 Insurance..... 10

8. INSURANCE

8.1 Insurance obtained and approved 10
8.2 Insurance Requirements.....10
8.3 Policies.....10
8.4 Failure to Maintain Insurance..... 11
8.5 Certificates of Insurance..... 11
8.6 Replacement/Renewal Certificates..... 11
8.7 Proof of Insurance.....11

9. CONFORMANCE WITH FEDERAL, STATE AND OTHER JURISDICTIONAL REQUIREMENTS

9.1 Permits, Laws, Taxes and Regulations..... 12
9.2 Taxes-Federal, State and Local.....12
9.3 Labor and Wages..... 12
9.4 Minimum Wage..... 12

10. DISCRIMINATORY PRACTICES

10.1 Discrimination – Labor Matters.....13
10.2 Equal Opportunity.....13

11. CONFORMANCE WITH CITY ORDINANCE, HIRING OF WATERBURY RESIDENTS

11.1 Ordinance on Hiring Waterbury Residents.....13
11.2 Failure to Comply with Good Jobs Ordinance..... 13

12. HUD SECTION 3

12.1 Work Subject to HUD Section 3 Clause.....14
12.2 Agree to comply with Section 3 Clause.....14
12.3 Post Section 3 Notice.....14
12.4 Agreement to Include Section 3 Clause.....14
12.5 Vacant Positions.....14
12.6 Noncompliance with HUD regulations.....14
12.7 Indian Housing Assistance.....15

13. TERMINATION

13.1 Termination of Agreement for Cause..... 15
13.2 Termination for Convenience of the City..... 15
13.3 Termination of Non-Appropriation or Lack of Funding.....15

14. RIGHTS UPON CANCELLATION OF TERMINATION

14.1 Termination for Cause..... 16
14.2 Termination for Lack of Funding or Convenience..... 16
14.3 Termination by the WDC..... 17
14.4 Assumption of Subcontracts..... 17
14.5 Delivery of Documents.....17
14.6 Ownership of Instruments of Professional Services..... 17

15. FORCE MAJEURE..... 17

16. SUBCONTRACTING

16.1 Approval to Subcontract..... 18
16.2 Responsibility..... 18

17. AUDIT..... 18

18. RISK OF DAMAGE AND LOSS.....18

19. ENTIRE AGREEMENT..... 19

20. INDEPENDENT CONTRACTOR RELATIONSHIP.....19

21. SEVERABILITY..... 19

22. SURVIVAL..... 20

23. CONFLICTS OR DISPUTES..... 20

24. DISPUTES; LEGAL PROCEEDINGS.....20

25. BINDING AGREEMENT..... 20

26. WAIVER.....20

27. GOVERNING LAWS..... 21

28. NOTICE.....21

29. ACKNOWLEDGEMENTS, NOTICES AND REPRESENTATIONS

29.1 Material Breach – Employee 21
29.2 Material Breach – Violation of the City's Code of Ordinance..... 21
29.3 Material Breach – Gratuity..... 22
29.4 Recovery of Payment..... 22
29.5 Kickback..... 22
29.6 Solicitation..... 22
29.7 Required Documents..... 22
29.8 Interest of City Officials..... 23
29.9 Prohibition Against Contingency Fees..... 23
29.10 Freedom of Information Act Notice..... 23

30. CITY AND WDC DESIGNEES:

30.1 City Designee..... 23
30.2 WDC Designee..... 23

ADDENDUMS

ADDENDUM A - CDBG Program Statement of Work; Specific CDBG Certifications
ADDENDUM B - HOME Program Statement of Work; Specific HOME Certifications
ADDENDUM C - Emergency Solutions Grant Statement of Work; ESG Certifications
ADDENDUM D - Project Management Scope of Services

EXHIBITS

EXHIBIT A - City Ordinances
§31.269 – WDC Designation of Authority
§38.020-38.071 – Solicitation and Award Methods of Source Selection
§34.15-34.22 – Hiring of Waterbury Residents on Certain Publicly-Funded Construction Projects, and as further amended from time to time.
EXHIBIT B - U.S. Department of Housing and Urban Development
SF 424 – Certifications
EXHIBIT C - CFR Procurement Requirements
24 C.F.R. §84.40 – 84.48
EXHIBIT D - List of Current WDC Projects

MASTER MUNICIPAL AGREEMENT
BY AND BETWEEN
THE CITY OF WATERBURY
AND
THE WATERBURY DEVELOPMENT CORPORATION

THIS MASTER AGREEMENT, for Project/Program Management Services ("Master Agreement") is entered into by and between the **CITY OF WATERBURY**, a municipal corporation organized and existing under the laws of the State of Connecticut, located at 235 Grand Street, Waterbury, Connecticut, (the "City"), and **THE WATERBURY DEVELOPMENT CORPORATION** ("WDC"), a federally-recognized 501(c)(3) not-for-profit, duly registered domestic corporation, located at 83 Bank Street, 3rd Floor, Waterbury, Connecticut, (the "WDC").

WHEREAS, the City undertakes, and may financially participate in municipal economic development projects;

WHEREAS, the City is the Grantee of certain grant program funds pursuant to certain State and/or Federal Government Funding Approval/Agreements by and between the City and such State and Federal Government agencies;

WHEREAS, the City, as a Grantee has undertaken certain responsibilities and obligations pursuant to the Funding Approvals/Agreements to administer the grants and programs;

WHEREAS, by City Ordinance, currently codified at §31.269, a copy of which is attached hereto as Exhibit A, has designated the WDC, to be, among other designations, the City's Economic Development Agency, Housing Site Development Agency and Community Development Agency;

WHEREAS, by City Ordinance, currently codified at §31.269(C) the WDC, when duly designated, is authorized to act on behalf of the City in the capacity of general contractor, project manager, construction manager, design builder, owner's representative and/or in such other similar development or construction capacity or capacities, without the requirement or necessity of a bid;

WHEREAS, the City is the Grantee of the Community Development Block Grant ("CDBG"), the Emergency Solutions Grant "(ESG") and the Home Investments Partnership Program ("HOME") pursuant to certain Funding Approvals/Agreements by and between the City and the United States Department of Housing and Urban Development ("HUD");

WHEREAS, the City, as Applicant and Grantee, has undertaken certain responsibilities and obligations to HUD pursuant to such Funding Approval/Agreements to administer such grants and programs and through WDC, as a consequence of such responsibilities and obligations has made certain certifications to HUD for the current year and in a similar manner in previous funding years, as set forth in a form attached hereto as Exhibit B;

WHEREAS, the City, is further desirous of having the WDC assume and to continue certain responsibilities and obligation to administer the grants and programs on a project-by-project basis;

WHEREAS, the City, is desirous of having the WDC assume and to continue the responsibilities for certain economic development projects, on a project-by-project basis;

WHEREAS, the WDC is agreeable to the assumption and continuance of such responsibilities and obligations to administer such grants and programs and oversee and manage such projects on behalf of the City;

WHEREAS, the City, has previously designated the WDC as the administrator of grants and programs, including but not limited to, administrator of the Community Development Block Grant ("CDBG"), the Emergency Solutions Grant ("ESG"), and the Home Investments Partnership Program ("HOME") (as said programs have been or may be renamed or amended from time to time) as well as the operation and management of various programs and projects, including but not limited to the Senior Shuttle Program, under a Revised Agreement between the City and WDC, dated April 21, 2008; and

WHEREAS, the City has previously duly designated the WDC as the Project Manager for certain Economic and Development projects and so approved by the Board of Alderman, as listed on Exhibit A and will continue its obligations under such designations pursuant to the terms of this Agreement.

NOW, THEREFORE, IN CONSIDERATION OF THE MUTUAL PROMISES HERE, THE CITY AND WDC HEREBY AGREE AS FOLLOWS:

1. DEFINITIONS:

1.1 "Administrator", "Administration", "Administrating" of a program or project shall mean conducting, managing, and administration of any and all aspects of operations required to perform and complete the designated program or project by either the City or the WDC, as applicable to the particular designated program or project, in whole or part, including but not limited to, advertising and awarding any contract(s) for performance of work by contractor(s) in whole or part, or any combination thereof, and undertaking all the administrative duties related to and required for the completion of the designated program or project, and shall be conducted in such manner or satisfactory to the City and consistent with any and all relevant Federal, State and City standards

required by the funding source(s) and/or as may be a condition of the program/project funds.

1.2 "Designated Program" or "Designated Project" shall mean any program or project that the City has undertaken or participates for which the WDC has been duly designated to Administer on behalf of the City and for which the WDC is authorized to act on behalf of the City in conformance with City Ordinances as set forth in this Agreement, Charter and applicable State and Federal Law and Regulations.

1.3 Project or Program Authorization Letter ("PAL") shall mean the written documentation that authorizes and delineates the Designated Project or Designated Program and authorizing funding source to the WDC.

2. DESIGNATION OF PROGRAM ADMINISTRATOR AND PROJECT MANAGER:

2.1 Authority to Designate: The City, through the Mayor, shall designate WDC as Program Administrator or Project Manager on a program or project basis, in writing pursuant to City of Waterbury Code of Ordinances as set forth in this Agreement and/or applicable City of Waterbury Charter provisions.

2.2 Prior Program Designations:

A. The City has, by written agreement, revision dated April 21, 2008, designated the WDC as the Program Administrator of all aspects of the CDBG Program, the HOME Program and the ESG Program, pursuant to and in accordance with the specific program requirements as set forth in the April 21, 2008 Agreement, at Addendum "A" (CDBG); Addendum "B" (HOME), and Addendum "C" (ESG) respectively. Said Addendum A, B, and C are attached hereto and incorporated by reference to this Agreement. This Agreement shall supersede all prior Agreements for the covered programs identified herein at Paragraph 2.2 as said programs have been or may be renamed or amended from time to time.

B. Pursuant to said prior Program Administrator designation referenced in Paragraph 2.2 herein, the WDC was designated as Program Administrator for the Senior Shuttle Program. Said designation shall continue and this Agreement shall supersede all prior agreements.

C. The City hereby ratifies and authorizes all previous programs and/or projects assigned to WDC by the City.

2.3 PAL Approval: The City shall issue to the WDC a Program and/or Project Authorization Letter ("PAL"), which will be addressed to the Chief Executive Officer of WDC and signed by the Mayor. Each PAL issued under this Agreement shall comply with City Ordinance provisions regarding the Execution of Contracts, as amended from

time to time and currently at §38.072 of City Ordinance. Inclusive of said requirements, but not limited thereto and incorporated by reference are the specific following requirements:

A. Execution by the Mayor: The Mayor, on behalf of the City shall execute each PAL.

B. Role of Corporation Counsel: The Corporation Counsel, shall approve each PAL as to form and compliance with all legal requirements, including City Charter and Ordinances.

C. Approval by the Board of Aldermen: Each PAL shall be subject to Board of Aldermen approval.

2.4 Revisions to the PAL: Any modification to the scope, the allowed funding amount, or cost breakdown of the Designated Program or Designated Project must be signed by the Mayor, and is subject to approvals and in accordance with the procedures set forth above 2.3, any revised PAL will supersede the previously issued PAL and will control unless otherwise provided.

2.5 Content of the PAL: The PAL issued by the City shall set forth, at a minimum:

A. The Funding source(s); the related funding authorization or program information; any associated funding ratio between the City and other funding sources including Federal or State Government sources, as applicable;

B. The maximum City funds or ratio;

C. City Certification of fund availability;

D. An estimated cost breakdown for the designated Project or Program, if applicable;

E. The total estimated Project/Program amount;

3. CONDUCT:

3.1 WDC to perform and complete: Upon approval of the PAL, the WDC in its own name may apply for state and federal grants and otherwise shall administer and engage in all activity associated with the Designated Program/Designated Project in accordance with the PAL and this Master Agreement.

3.2 Service: With respect to program and project management, the WDC shall, in its own name, perform the services as set forth in Addendum D herein on each

designated project or program in addition to the services set forth and further amplified in each PAL;

3.3 The City shall remain primarily responsible and liable for all grant and program funds awarded and to be expended by the WDC on behalf of the City pursuant to this Master Agreement. As such, in order to allow proper monitoring and oversight of such expenditures by the City, the WDC will set up requests for draw-downs against grant and program funds allocated to the City, using software or other draw down protocols as provided by a grant program or funding source, including but not limited to IDIS software system provided by HUD; provided, however, that final authorization to expend such funds shall only occur after review and final approval of any such draw-downs/expenditures by the City, utilizing IDIS or such other software or protocols adopted from time to time.

3.4 Assignability: The WDC shall not assign any interest in this Master Agreement, and shall not transfer any interest in the same, by assignment or novation, without the prior written approval of the City and subject to any applicable City Ordinance and Charter provisions.

3.5 Draw-Downs: Upon final approval by the City for any draw-down(s) funding will be electronically transferred directly to the City's bank account for subsequent re-transfer electronically to the WDC's bank account or shall be transferred by such other protocol that is established from time to time by a grant or other funding source. The City shall only record receipt of the funds and the transfer of those funds to WDC, but shall not record any expenses. WDC shall record receipt of such transfer from the City and the expenditures made there from.

4. SUBCONTRACTS:

4.1 Monitoring: The WDC will monitor all subcontracted services on a regular basis, to the reasonable satisfaction of the City, to assure contract compliance. Results of monitoring efforts shall be summarized in written reports and supported with documented evidence of follow-up actions taken to correct areas of noncompliance.

4.2 Content: The WDC shall insure that any subcontractor agreement entered into in the performance of this Master Agreement contains all provisions mandated by Federal, State and local law and/or regulations as set forth herein. All subcontracts shall further include any other provisions of this Master Agreement that may be applicable either explicitly or by incorporation of this Master Agreement by reference or as requested by the PAL. Despite any failure to include any provision(s) contemplated by this paragraph in the subcontract, the WDC will nonetheless be bound by any and all applicable provision contained in this Master Agreement.

5. PROCUREMENT STANDARDS AND SELECTION PROCESS:

5.1 Standards and selection process: Unless otherwise required by a funding source, to expedite and streamline the approval and execution process for any contract or subcontract pursuant to a PAL, the WDC shall undertake to insure that all contracts and subcontracts under this Master Agreement are awarded on a fair, and open competitive basis, as directed by the City Director of Purchasing, utilizing one or more of the following procedures:

A. The WDC shall procure all materials, property or services in accordance with the requirements of 24C.F.R. §84.40-84.48, establishing procedures for the procurement of supplies and other expendable property, equipment, real property, and other services with Federal Funds, attached hereto as Exhibit C; or

B. Any procurement as defined by City Ordinance §38.020 shall be made by the WDC in accordance with a process that is identical to the City's Solicitation and Award Methods of Source Selection" requirements pursuant to City Ordinance §38.020-38.071 as amended from time-to time; attached hereto as Exhibit A; or

C. As performed by and under the direction and supervision of the City's Director of Purchasing and in his sole discretion.

6. COMPENSATION:

6.1 Full and Complete Payment: Compensation provided under this Section 6 for Designated Project/Designated Program shall consist of full and complete payment for all reasonable costs assumed by the WDC in performing a PAL, including, but not limited to, salaries, fringe benefits, including vacation, and overhead; WDC fees; costs of materials and supplies; printing and reproduction; meetings, consultation and presentations; travel expenses; postage; telephone; clerical expenses, and all similar expenses. The provisions of this Section 6 do not apply to or affect funds that may be appropriated by the City to the WDC from time to time for the WDC's general purposes. No direct costs shall be reimbursed by the City other than as provided herein, except for legal fees incurred by the WDC in the defense of third party claims as a result of the City's negligence, provided that the WDC has properly discharged its services under this Agreement and, provided further, that the WDC immediately informs the City in writing of any such claims, affording the City the opportunity to determine, in its sole discretion, whether it desires to undertake the defense of any such claims.

6.2 Fee Schedule: The fee payable to the WDC under this Agreement shall be set forth on a project-by-project basis pursuant to each PAL.

6.3 Limitation of Payment: Compensation payable to the WDC is limited to those fees set forth in this Section 6 herein. Such compensation shall be paid by the City upon review and approval of the WDC's invoices for payment, submitted no more often than once a month, and review of the work, services, reimbursable costs, deliverables, etc. required in this agreement and review as may be further required by the Charter and Ordinances of the City. The WDC's invoices shall describe the work, the actual hours worked by each WDC employee, services, reimbursable costs, reports, plans, specifications, deliverables, etc. rendered and the compensation sought therefore in a form and with detail and clarity acceptable to the City.

6.4 Recording Keeping: The WDC shall document all expenses it incurs and maintain all records relating to each Designated Project or Designated Program costs, including but not limited to its payroll hours on timesheets of staff working directly on any Designated Project or Designated Program, material purchases made by the WDC and reimbursement due to the WDC for use of the WDC-owned or rented equipment. Rates of reimbursement will be based on existing city audited rate, if none, then pursuant to reasonable industry standards. Reimbursable payroll costs are limited to actual WDC payroll for work on the Project or Program and fringe benefits as set forth in this Section 6.

6.5 Reimbursement: The WDC shall seek reimbursement for its expenditures first from any Project or Program funding source as may be allowed or granted. Upon approval of reimbursement for any portion of the WDC costs and expenses, by any other funding source, the WDC shall submit to the City invoicing for the City's proportionate share of the reimbursable costs and expenses pursuant to any cost sharing established by the PAL.

6.6 Proposal Costs: All costs of the WDC in preparing its estimate of cost for this Designated Project or Designated Program shall be solely borne by the WDC and are not included in the compensation to be paid by the City to the WDC under this Agreement or any other agreement.

6.7 Payment for Services, Materials and Employees: The WDC shall be fully and solely responsible for the suitability of and compliance with this Agreement, of all labor, services, equipment, materials, reports, plans, specifications, deliverables, incidentals, etc. furnished to the City by the WDC under this Agreement. The WDC shall promptly pay all employees as their pay falls due, shall pay promptly as they fall due all bills for labor, services, equipment, materials, reports, plans, specifications, deliverables, incidentals, etc., going into the work, and all bills for insurance, bonds, Worker's Compensation coverage, Federal and State Unemployment Compensation, and Social Security charges applicable to this project. Before final payment is made, the WDC shall furnish a legal statement to the City that all payments required under this subparagraph have been made.

6.8 Liens: Neither the final payment nor any part of any retained percentage, if any, shall become due until the WDC, if requested by the City, shall deliver to the City

a complete release of all liens arising out of this agreement, or receipts in full (subject to contractual retainages) in lieu thereof, and, if required, in either case, an affidavit that so far as the WDC has knowledge or information, the releases and receipts include all the labor and material for which a lien could be filed; but the WDC may, if any subcontractor refuses to furnish a release or receipt in full, furnish a bond satisfactory to the City, to indemnify it against any lien. If any lien remains unsatisfied after all payments are made, the WDC shall refund to the City all moneys that the City may be compelled to pay in discharging such a lien, including all costs and a reasonable attorney's fee.

6.9 Review of Work: The WDC shall permit the City to review, at any time, all work performed under the terms of this Agreement at any stage of the work. The WDC shall maintain or cause to be maintained, throughout the duration of the Project and for a reasonable period thereafter as may be necessary for any required or desired audits, all records, books or other documents relative to salaries, fringe benefits, overhead, charges, costs, expenses, fees, alleged breaches of the agreement, settlement of claims or any other matter pertaining to the WDC's demand for payment. Further any and all such records of the WDC pertaining to the Project shall be available for review by the City at all reasonable times. The City shall not certify fees for payment to the WDC until the City has determined that the WDC has completed the work in accordance with the requirements of this Agreement.

7. HOLD HARMLESS:

7.1 The WDC shall indemnify, defend, and hold harmless the City and its boards, the City's Board of Education (if applicable), commissions, agents, officials and employees from and against all claims, suits, damages, losses, judgments, costs and expenses including attorney's fees arising out of or resulting from the delivery of the labor, services, equipment, materials, reports, plans, specifications, deliverables, incidentals, etc., provided that any such claims, suits, damages, losses, judgments, costs or expenses (a) are attributable to bodily injury, sickness, disease or death, or injury to or destruction of tangible property (other than the services itself) including the loss of use resulting there from, and (b) are caused by any willful or negligent act or omission of the WDC, its employees, its subcontractors, or anyone employed by them or anyone for whose acts any of them may be liable.

7.2 In any and all claims against the City or any of its boards, agents, employees or officers by the WDC or any employee of the WDC, any subcontractor, anyone directly or indirectly employed by any of them or anyone for whose acts any of them may be liable, the indemnification obligation under Paragraph 7.1, herein, shall not be limited in any way by any limitation on the amount or type of damages, compensation or benefits payable by or for the WDC or any subcontractor under Worker's Compensation Acts, disability benefit acts or other employee benefit acts.

7.3 The WDC understands and agrees that any insurance required by this agreement, or otherwise provided by the WDC, shall in no way limit the responsibility to indemnify, defend, keep and hold harmless the City as provided in this agreement.

8. INSURANCE:

8.1 The WDC shall not commence work under this agreement until all insurance required under this Section 8 has been obtained by the WDC and/or such insurance has been approved by the City. The WDC shall not allow any subcontractor to commence work on any subcontract until all insurance required of any such contractor has been so obtained and approved by the WDC.

8.2 Insurance Requirements: Insurance shall be provided by insurers that are satisfactory to the WDC, authorized to do business in the State of Connecticut, that have at least an "A-" Best's Rating, and are in an A.M. Best financial size category of VII or higher. The A.M. Best classifications are based on the most current A.M. Best Company ratings or an equivalent City approved rating system.

8.3 Policies: The WDC's General, Automobile and Excess Liability Insurance policies shall be endorsed to add the City as an additional insured. The insurance afforded the additional insured shall be primary insurance and the coverage and limits provided under the WDC's policies shall not be reduced or prorated by the existence of any other insurance applicable to any loss the additional insured may have suffered. Each insurance policy shall state that the insurance company shall agree to investigate and defend the insured against all claims for damages, provided the claim is for a loss covered by the terms of the applicable policy, even if groundless. If any insurance required herein is to be issued or renewed on a claims made form as opposed to an occurrence form, the retroactive date for coverage shall be no later than the commencement date of this agreement and shall provide that in the event of cancellation or non-renewal, the discovery period for insurance claims ("Tail Coverage") shall be available for at least 60 months.

The following policies with stated limits shall be maintained, in full force and effect, at all times during which the services are to be performed by the WDC:

A. General Liability Insurance: $1,000,000.00 per occurrence, $2,000,000.00 aggregate. Providing coverage to protect the City for all damages arising out of bodily injuries sickness or death of all persons in any one accident or occurrence and for all damages arising out of destruction of property in any one accident or occurrence.

B. Automobile Liability Insurance: $1,000,000.00 combined single limit (CSL). Providing coverage to protect the City with respect to claims for damage for bodily injury and or property damage arising out of ownership,

maintenance, operation, use or loading and unloading of any owned or non-owned vehicle

C. Workers' Compensation: Statutory Limits within the State of Connecticut. The WDC shall comply with all State of Connecticut statutes as it relates to workers' compensation.

D. Excess Liability Insurance: $3,000,000.00 aggregate limit. Comprehensive general liability umbrella insurance coverage.

8.4 Failure to Maintain Insurance: In the event the WDC fails to maintain the minimum required coverage as set forth herein, the City may, at its option, purchase same and offset the WDC's invoices for the cost of said insurance.

Cancellation: The WDC shall provide a copy of all notices of cancellation received from their insured within 5 days of said receipt, by them of said notice of cancellation, regardless of the reason for such cancellation.

8.5 Certificates of Insurance: At the time the WDC executes this agreement, it shall furnish to the City, subject to City approval, certificate(s) of insurance verifying the above coverage's, including the naming of the City of Waterbury, as follows:

"The City of Waterbury and its Board of Education (if applicable)
are listed as additional insured as their interests may appear".

8.6 The WDC must supply replacement/renewal certificates at least 30 days prior to the expiration of the policy (ies). Said certificates shall contain a provision that coverage afforded under the policies shall not be cancelled or reduced for any reasons unless notice of not less than thirty (30) calendar days has been mailed to the Risk Manager, 235 Grand Street, Waterbury, CT. 06702.

8.7 Upon request, the WDC shall deliver to the City a copy of the WDC's insurance policies, endorsements, and riders.

9. CONFORMANCE WITH FEDERAL, STATE AND OTHER JURISDICTIONAL REQUIREMENTS:

By executing this Agreement, the WDC represents and warrants that, at all pertinent and relevant times to the Agreement, it will remain in full compliance with all applicable statutes, acts, ordinances, guidelines, resolutions, orders, judgments, decrees, injunctions, rules, and regulations of all government authorities applicable to performance by the WDC of services hereunder, including those having jurisdiction over its registration and licensing to perform services hereunder; including, but not limited to, the following: EQUAL EMPLOYMENT OPPORTUNITY ACT; COPELAND ANTI-KICKBACK ACT, as supplemented in the Department of Labor Regulations (29 CFR Part 3); DAVIS-BACON ACT as supplemented by Department of Labor Regulations (29

CFR Part 5); Section 103 and 107 of the Contract Work Hours and Safety Standards Act, as supplemented by the Department of Labor Regulations (29 CFR Part 5); and the HOUSING and COMMUNITY DEVELOPMENT ACT of 1974, as amended. All applicable sections of the City Charter and Code of Ordinances are incorporated by reference and made a part hereof.

The WDC hereby agrees and shall comply with any and all requirements of the Freedom of Information Act, as it may be amended from time-to-time, with reference to this contract and any work performed by WDC and/or any of its subcontractors or agents.

9.1 Permits, Laws, Taxes and Regulations. Permits and licenses necessary for the delivery and completion of the WDC's work and services shall be secured in advance and paid by the WDC. The WDC shall give all notices and comply with all laws, ordinances, rules and regulations bearing on the conduct of the work and services as specified.

9.2 Taxes-Federal, State and Local. The City is exempt from Federal Excise and Transportation, State and Local Sales and Use Taxes, including without limitation, taxes that would otherwise be imposed upon the WDC for transactions required or necessitated hereunder between it and its subcontractors, suppliers, etc. The WDC remains liable, however, for any applicable tax obligations it incurs. Moreover, the WDC represents that the proposal and pricing contained in any PAL will not include an amount payable for said taxes.

9.3 Labor and Wages. The WDC shall conform to the labor laws of the State of Connecticut, and all other laws, ordinances, and legal requirements affecting the work in Connecticut and shall require such conformance in its contracts with subcontractors.

9.4 The WDC is aware of the provisions of Title 31, §53 of the Connecticut General Statutes, latest revision (the "Act"), concerning the payment of minimum wages and other payments or contributions established by the State of Connecticut Labor Commissioner for work on public facilities. The provisions of the Act are incorporated by reference and made a part of this agreement. The Act provides, in part, that the prevailing wage law applies to (i) new construction where the total cost of all work performed by all contractors and subcontractors is equal to or greater than $400,000.00, and (ii) remodeling, refurbishing, rehabilitation, alteration or repair of any project where the total cost of all work performed by all contractors and subcontractors is equal to or greater than $100,000.00.

10. DISCRIMINATORY PRACTICES:

In performing this agreement, the WDC shall not discriminate against any employee or applicant for employment, with respect to his or her hire, tenure, terms, conditions or privileges of employment, or any matter directly or indirectly related to employment, because of race, color, sex, age, religious creed, disability, national origin or ancestry, marital status, family status, prior psychiatric treatment, health care, military

status or source of income or because of a handicap that is unrelated to the employee's or the applicant's ability to perform the duties of a particular job or position. Subcontracts with each subcontractor shall contain a provision requiring non-discrimination in employment as herein specified. This covenant is required pursuant to §93.04 of the Code of Ordinances of the City and any breach thereof may be regarded as a material breach of this agreement. Said provisions with subcontractors shall require conformity and compliance with all Local, State and Federal laws, rules and regulations and Executive orders pertaining to discrimination and equal opportunity requirements.

10.1 Discrimination Because of Certain Labor Matters: No person employed on the work covered by this agreement shall be discharged or in any way discriminated against because such person has filed any complaint or instituted or caused to be instituted any proceeding or has testified or is about to testify in any proceeding under or related to the labor standards applicable hereunder to its employer.

10.2 Equal Opportunity: In its execution of the performance of this agreement, the WDC shall not discriminate and shall comply with applicable laws prohibiting discrimination on the grounds of race, color, religion, sex, national origin or citizenship status, age or handicap. The WDC agrees to comply with all Local, State and Federal laws, rules and regulations and Executive orders pertaining to discrimination and equal opportunity requirements, and will require the same of all subcontractors.

11. CONFORMANCE WITH CITY ORDINANCE, HIRING OF WATERBURY RESIDENTS

Conformance with City Ordinance §34.15; Hiring Of Waterbury Residents On Certain Publicly-Funded Construction Projects, as amended from time-to-time. The Ordinance is attached hereto as Exhibit A and a copy of the current ordinance shall be prominently including in each contract/subcontract subject to §34.15.

11.1 The WDC shall comply with the specific requirements of "An Ordinance Concerning the Hiring of Waterbury Residents on Certain Publicly-Funded Construction Projects" (the "Good Jobs Ordinance"), as may be amended from time to time and as set forth in Chapter 34 of the Code of Ordinances of the City and shall require such compliance by subcontactors in its subcontracts. The Contractor does hereby acknowledge that it has reviewed a copy of the Good Jobs Ordinance and that it has read the Ordinance and that Contractor is familiar with the obligations imposed on the Contractor by the Good Jobs Ordinance.

11.2 Failure of the Contractor or its Subcontractors to comply with the Good Jobs Ordinance shall be a material breach of this Agreement.

12. HOUSING AND URBAN DEVELOPMENT SECTION 3 CLAUSE:

In the event a PAL is funded, in whole or in part, through Housing and Urban Development assistance, 24 C.F.R. §135.38 may apply and the WDC shall then be

required to comply with and include in subcontracts, the following language (referred to as the "Section 3 clause"):

12.1 The work to be performed under this contract is subject to the requirements of Section 3 of the Housing and Urban Development Act of 1968, as amended, 12 U.S.C. § 1701u (Section 3). The purpose of Section 3 is to ensure that employment and other economic opportunities generated by HUD assistance or HUD-assisted Projects covered by Section 3, shall, to the greatest extent feasible, be directed to low and very low-income persons, particularly persons who are recipients of HUD assistance for housing.

12.2 The parties to this contract agree to comply with HUD's regulations in 24 C.F.R. part 135, which implement Section 3. As evidenced by their execution of this contract, the parties to this contract certify that they are under no contractual or other impediment that would prevent them from complying with the part 135 regulations.

12.3 The contractor agrees to send to each labor organization or representative of workers with which the contractor has a collective bargaining agreement or other understanding, if any, a notice advising the labor organization or workers' representative of the contractor's commitments under this Section 3 clause, and will post copies of the notice in conspicuous places at the work site where both employees and applicants for training and employment positions can see the notice. The notice shall describe the Section 3 preference, shall set forth minimum number and job titles subject to hire, availability of apprenticeship and training positions, the qualifications for each; and the name and location of the person(s) taking applications for each of the positions; and the anticipated date the work shall begin.

12.4 The contractor agrees to include this Section 3 clause in every subcontract subject to compliance with regulations in 24 C.F.R. part 135, and agrees to take appropriate action, as provided in an applicable provision of the subcontract or in this Section 3 clause, upon a finding that the subcontractor is in violation of the regulations in 24 C.F.R. part 135. The contractor will not subcontract with any subcontractor where the contractor has notice or knowledge that the subcontractor has been found in violation of the regulations in 24 C.F.R. part 135.

12.5 The contractor will certify that any vacant employment positions, including training positions, that are filled (1) after the contractor is selected but before the contract is executed, and (2) with persons other than those to whom the regulations of 24 C.F.R. part 135 require employment opportunities to be directed, were not filled to circumvent the contractor's obligations under 24 C.F.R. part 135.

12.6 Noncompliance with HUD's regulations in 24 C.F.R. part 135 may result in sanctions, termination of this contract for default, and debarment or suspension from future HUD assisted contracts.

12.7 With respect to work performed in connection with Section 3 covered Indian housing assistance, section 7(b) of the Indian Self-Determination and Education Assistance Act (25 U.S.C. § 450e) also applies to the work to be performed under this contract. Section 7(b) requires that to the greatest extent feasible (i) preference and opportunities for training and employment shall be given to Indians, and (ii) preference in the award of contracts and subcontracts shall be given to Indian organizations and Indian-owned Economic Enterprises. Parties to this contract that are subject to the provisions of Section 3 and section 7(b) agree to comply with Section 3 to the maximum extent feasible, but not in derogation of compliance with section 7(b).

13. TERMINATION:

13.1 Termination of Agreement for Cause: If, through any cause, in part or in full, the fault of the WDC, the WDC shall materially fail to fulfill in a timely and proper manner its obligations under this agreement, or if the WDC shall commit a material violation any of the covenants, agreements, or stipulations of this Agreement, the City shall thereupon have the right to terminate this Agreement by giving written notice to the WDC of such termination and specifying the effective date thereof, at least fifteen (15) days before the effective date of such termination and an opportunity to cure by the end of the fifteen (15) day period. In the event of such termination, all finished or unfinished documents, data, studies, reports, specifications, deliverables, etc. prepared by the WDC under this agreement shall, at the option of the City, become the City's property, and the WDC shall be entitled to receive just and equitable compensation for any satisfactory work completed for such.

Notwithstanding the above, the WDC shall not be relieved of liability to the City for damages sustained by the City by virtue of any breach of this Agreement by the WDC, and the City may withhold any payments to the WDC for the purpose of setoff until such time as the exact amount of damages due the City from the WDC is determined.

13.2 Termination for Convenience of the City: The City may terminate this Agreement at any time for the convenience of the City, by a notice in writing from the City to the WDC. If this Agreement is terminated by the City as provided herein, the WDC will be paid an amount which bears the same ratio to the total compensation as the services actually performed bear to the total services of the WDC covered by this agreement, less payments of compensation previously made.

13.3 Termination for Non-Appropriation or Lack of Funding: The WDC acknowledges that the City is a municipal corporation and that this Agreement is subject to the appropriation of funds by the City sufficient for this agreement for each budget year in which this agreement is in effect. The WDC therefore agrees that the City shall have the right to terminate this Agreement in whole or in part without penalty in the event sufficient funds to provide for City payment(s) under this agreement is/are not

appropriated, not authorized or not made available pursuant to law, or such funding has been reduced pursuant to law.

A. Effects of Non-Appropriation: If funds to enable the City to effect continued payment under this Agreement are not appropriated, authorized or otherwise made available by law, the City shall have the right to terminate this Agreement without penalty at the end of the last period for which funds have been appropriated, authorized or otherwise made available by law by giving written notice of termination to the WDC.

B. Effects of Reduced Levels of Funding: If funding is reduced by law, or funds to pay the WDC for the agreed to level of the products, services and functions to be provided by the WDC under this Agreement are not appropriated, authorized or otherwise made available by law, the City may, upon seven (7) business days written notice to the WDC, reduce the level of the products, services or functions in such manner and for such periods of time as the City may elect. The services to be performed and the charges payable under this Agreement shall be equitably adjusted to reflect such reduced level of products, services or functions and the parties shall be afforded the rights set forth in this agreement.

C. No Payment for Lost Profits: In no event shall the City be obligated to pay or otherwise compensate the WDC for any lost or expected future profits.

14. RIGHTS UPON CANCELLATION OR TERMINATION:

14.1 Termination for Cause: In the event the City terminates this Agreement for cause, the WDC shall relinquish to the City any applicable interest, title and ownership including, but not limited to, perpetual use of any proprietary rights in and to the documents, data, studies, reports, specifications, deliverables, etc. provided to, in possession of, and properly invoiced and paid for by the City (except to the extent such invoiced amount is disputed). With regard to third party products, the WDC shall transfer all licenses to the City which the WDC is permitted to transfer in accordance with the applicable third party license. The City shall have no financial obligation to compensate the WDC for such terminated documents, data, studies, reports, specifications, deliverables, etc. unless payment is otherwise approved by the City prior to such termination. In the event of any litigation related to the termination of this Agreement, the prevailing party shall be entitled to its reasonable attorney fees and court awarded fees and costs incurred.

14.2 Termination for Lack of Funding or Convenience: In the event of termination by the City for lack of funding or convenience, the City shall pay the WDC for all documents, data, studies, reports, specifications, deliverables, etc. (including any holdbacks), installed and delivered to the City as of the Termination Date and the WDC shall relinquish to the City any applicable interest, title and ownership including, but not

limited to perpetual use of any proprietary rights in and to said documents, data, studies, reports, specifications, deliverables, etc. in possession of and paid for by the City (except to the extent any invoiced amount is disputed). The WDC shall be required to exercise commercially reasonable efforts to mitigate damages. In the event of a termination for Lack of Funding or Convenience the City and the WDC may negotiate a mutually acceptable payment to the WDC for reasonable demobilization expenses. Said demobilization expenses, if any, shall be handled in accordance with the provision of this agreement pertaining to Changes in the Work.

14.3 Termination by the WDC: The WDC may, by written notice to the City, terminate this agreement if the City materially breaches, provided that the WDC shall give the City thirty (30) calendar days prior written notice and an opportunity to cure by the end of said thirty day period. In the event of such termination, the WDC will be compensated by the City for work performed prior to such termination date and the WDC shall deliver to the City all deliverables as otherwise set forth in this agreement.

14.4 Assumption of Subcontracts: In the event of termination, the City shall assume any and all subcontracts for products, services and functions provided exclusively under this Agreement and may further pursue completion of the work under this Agreement by replacement contract or otherwise as the City may in its sole judgment deem expedient.

14.5 Delivery of Documents: In the event of termination, (i) the WDC shall promptly deliver to the City, in a manner reasonably specified by the City, all labor, services, equipment, materials, reports, plans, specifications, deliverables, incidentals, etc and other tangible items furnished by, or owned, leased, or licensed by, the City, and (ii) the City shall pay the WDC for all services performed and deliverables completed and accepted (pro-rated for deliverables partially completed) prior to the effective date of the termination (except to the extent any invoice amount is disputed).

14.6 Ownership of Instruments of Professional Services: The City acknowledges that the WDC's documents, data, studies, reports, specifications, deliverables, etc. created and to be created pursuant to this agreement, including electronic files, are Instruments of Professional Services. Nevertheless, subject to applicable trademark, copyright or patent law, the final Instruments of Professional Services, including, but not limited to, documents, data, studies, reports, specifications, deliverables, etc. prepared for the City under this agreement shall become the property of the City upon City payment for that Instrument of Professional Services and the City reserves the right to use the Instruments of Professional Services.

15. FORCE MAJEURE:

The WDC shall not be held responsible for delays nor be subject to liquidated damages when such delays are caused by conditions beyond its control, including without limitation:

A. Acts of God, fire, explosion, epidemic, cyclone, flood, war, strikes, revolution, civil commotion, or acts of public enemies.

B. Change of law and order, proclamation, regulation, ordinance, or governmental requirement.

C. Delays caused by the WDC's vendors, except where such delays are the result of lack of adequate coordination by the WDC.

Upon cessation of work for reason of force majeure delays, the WDC shall use its best efforts to meet the schedule set forth in a PAL.

16. SUBCONTRACTING:

16.1 The WDC shall not, without the prior written approval of the City, subcontract, in whole or in part, any of the WDC's services. Any subcontractor so approved shall be required to secure and maintain insurance coverage equal to or better than that required of the WDC and shall name the City as an additional insured party and said subcontractors shall deliver to the City a certificate of insurance evidencing such coverages. All subcontractors shall comply with all Federal, State and Local, laws, regulations and ordinances but such requirement shall not relieve the WDC from its requirement that all work and services provided or required hereunder shall comply with all Federal, State and Local, laws, regulations and ordinances.

16.2 The WDC shall be as fully responsible to the City for the acts and omissions of the WDC's subcontractors, and of persons either directly or indirectly employed by them, as it is for the acts and omissions of persons directly employed by the WDC.

17. AUDIT:

The City reserves the right to audit the WDC's books of account in relation to this agreement any time during the period of this agreement or at any time during the twelve month period immediately following the closing or termination of this agreement. In the event the City elects to conduct such an audit, the WDC shall immediately make available to the City all records pertaining to this agreement, including, but not limited to, payroll records, bank statements and canceled checks.

18. RISK OF DAMAGE AND LOSS:

The WDC shall be solely responsible for causing the timely repair to and/or replacement of, City personal property or item(s) intended to become City property hereunder, where the need for repair or replacement was caused solely by the WDC, by someone under the care and/or control of the WDC by any subcontractor of the WDC, or by any shipper or delivery service if the risk of loss was allocated to the WDC upon shipment. The WDC shall be solely responsible for all costs and expenses, including but

not limited to shipping, delivery, insurance, etc, associated with the foregoing repair and replacement obligation. Further, the WDC shall be solely responsible for securing the City's written acceptance of all completed repairs and replacements required hereunder. The City hereby retains sole discretion to determine whether a repair or a replacement is the proper remedy.

19. ENTIRE AGREEMENT:

This agreement shall constitute the complete and exclusive statement excepted as provided; other than as direct on behalf of the City, of the Contract between the parties as it relates to this transaction and supersedes all previous agreements and understandings, whether written or oral, relating to such subject matter. Any amendment to this agreement must be in writing and agreed to and executed by the City and the WDC.

20. INDEPENDENT CONTRACTOR RELATIONSHIP:

The relationship between the City and the WDC is that of client and independent contractor, and as further defined in Sections 31.265 through Sections 31.270 of the City of Waterbury Code of Ordinances. No agent, employee, or servant of the WDC shall be deemed to be an employee, agent or servant of the City. The WDC shall be solely and entirely responsible for its acts and the acts of its agents, employees, servants and subcontractors during the performance of this agreement. It is the express intention of the parties hereto, and the WDC hereby agrees and covenants, that it and any and all third party(ies) and subcontractor(s) retained by the WDC hereunder is/are not and shall not be deemed an employee of the City of Waterbury, but is/are and shall remain an independent contractor relative to the City and that nothing herein shall be interpreted or construed as creating or establishing the relationship of employer-employee between the City of Waterbury and the WDC or between the City of Waterbury and any third party(ies) or subcontractor(s). Thus, the WDC hereby covenants and agrees that it, its subcontractor(s) and third party (ies) shall not be entitled to the usual characteristics of employment, such as income tax withholding, F.I.C.A. deductions, pension or retirement privileges, Workers Compensation coverage, health benefits, etc. and that the WDC shall be solely and entirely responsible for its acts and the acts of its agents, employees, servants, representatives, subcontractors and third party (ies).

Notwithstanding the designation of an independent contractor, the WDC hereby agrees that it shall be subject to any and all requirements of the Freedom of Information Act, as it may be amended from time-to-time, with reference to this contract and any work performed by WDC and/or any of its subcontractors or agents.

21. SEVERABILITY:

Whenever possible, each provision of this Agreement shall be interpreted in such a manner as to be effective and valid under applicable law. If any provision of this agreement, however, is held to be prohibited or invalid under applicable law, such provision shall be deemed restated to reflect the original intentions of the parties, as

nearly as possible in accordance with applicable law, and if capable of substantial performance, the remaining provisions of this agreement shall be enforced as if this agreement was entered into without an invalid provision. If the ruling and/or controlling principle of law or equity leading to the ruling is subsequently overruled, modified or amended by legislation, judicial or administrative action, then the provision(s) in question as originally set forth in this agreement shall be deemed valid and enforceable to the maximum extent permitted by the new controlling principal of law or equity.

22. SURVIVAL:

Any provisions of this Agreement that impose continuing obligations on the parties shall survive the expiration or termination of this agreement for any reason.

23. CONFLICTS OR DISPUTES:

This Agreement represents the full and complete concurrence between the City and the WDC, governs all disputes between them and supersedes all statements to the contrary occurring either in proposals or other prior agreements, oral or written, and all other communications between the parties relating to this subject. This agreement or any section thereof shall not be construed against any party due to the fact that the agreement or any section thereof was drafted by such party.

24. DISPUTES; LEGAL PROCEEDINGS; WAIVER OF TRAIL BY JURY AND CONTINUED PERFORMANCE:

The WDC agrees that its waives a trial by jury as to any and all claims, causes of action or disputes arising out of this agreement or services to be provided pursuant to this agreement. Notwithstanding any such claim, dispute or legal action, the WDC shall continue to perform services under this agreement in a timely manner, unless otherwise directed by the City.

25. BINDING AGREEMENT:

The City and the WDC each bind themselves, and their successors, assigns and legal representatives to the other party to this Agreement and to the successors, assigns and legal representatives of such other party with respect to all covenants of this Agreement.

26. WAIVER:

Any waiver of the terms and conditions of this agreement by either of the parties hereto shall not be construed to be a waiver of any other term or condition of this agreement.

27. GOVERNING LAWS:

This Agreement, its terms and conditions and any claims arising there from shall be governed by the laws of the State of Connecticut.

28. NOTICE:

Except as otherwise specifically prohibited in this Agreement, whenever under this Agreement approvals, authorizations, determinations, notices, satisfactions or waivers are required or permitted, such items shall be effective and valid only when given in writing signed by a duly authorized officer of the City or the WDC, and delivered in hand or sent by mail, postage prepaid, to the party to whom it is directed, which until changed by written notice, are as follows:

WDC: Todd M. Montello, CEO
83 Bank Street, 3rd Floor
Waterbury, CT 06702

City: City of Waterbury
c/o Joseph Geary, Chief of Staff
Mayor's Office
235 Grand Street
Waterbury, CT 06702

29. ACKNOWLEDGMENTS, NOTICES AND REPRESENTATIONS:

The WDC shall supply the documents, data, studies, reports, specifications, deliverables, etc. under this Contract shall comply with all applicable Federal, State and Municipal statutes, regulations, charters, ordinances, rules, etc, whether or not they are expressly stated in this Contract, including but not limited to the following:

29.1 It shall be a material breach of this Contract, and, except as may be permitted by regulations or rulings of the City of Waterbury Board of Ethics, it shall be a violation of the City's Code of Ordinances, for any Public Official, City Employee or Member of a Board or Commission who is participating directly or indirectly in the procurement process as set forth in the City's Code of Ordinances, including those participating in exempt transactions, to become or be the employee of the WDC contracting with the governmental body by whom the Official, Employee, or Board or Commission member is employed or is a member.

29.2 It shall be a material breach of this Contract, and it shall be a violation of the City's Code of Ordinances for the WDC to offer, give, or agree to give any current or former Public Official, Employee or Member of a Board or Commission, or for such current or former Public Official, Employee or Member of a Board or Commission to solicit, demand, accept or agree to accept from the WDC, a gratuity or an offer of

employment in connection with any: decision; approval; disapproval; recommendation; preparation of any part of a Project requirement or a requisition; influencing the content of any specification or procurement standard; or rendering of advice, investigation, auditing, or in any other advisory capacity in any proceeding or application, request for ruling, determination, claim or controversy, or other particular matter, pertaining to any Project requirement or a Contract or Purchase Order, or to any solicitation or proposal therefore.

29.3 It shall be a material breach of this Contract and it shall be a violation of the City's Code of Ordinances for any payment, gratuity, or offer of employment to be made as an inducement for the award of a subcontract or order, by or on behalf of a subcontractor, the prime consultant/vendor or higher tier subcontractor or any person associated therewith, under a Contract or Purchase Order to the City.

29.4 The value of anything transferred or received in violation of the City's Charter, Code of Ordinances, and/or regulations promulgated there under, by the WDC subject to said Charter and/or Ordinances may be recovered by the City.

29.5 Upon a showing that a subcontractor made a kickback to the City, a prime consultant/vendor or a higher tier subcontractor in connection with the award of a subcontract or order there under, it shall be conclusively presumed that the amount thereof was included in the price of the subcontract or order and ultimately borne by the City and will be recoverable hereunder from the recipient. In addition, said value may also be recovered from the subcontractor making such kickbacks. Recovery from one offending party shall not preclude recovery from other offending parties.

29.6 It shall be a material breach of this Contract and it shall be a violation of the City's Code of Ordinances for the WDC to be retained, or to retain a person, to solicit or secure a contract with the City upon an agreement or understanding for a commission, percentage, brokerage, or contingent fee; and the WDC, before being awarded a City Contract, shall deliver to the City, on a City authored form, a representation that the WDC has not retained anyone in violation of this subsection, the failure to deliver said form being a material breach of this Contract and a violation of the City's Code of Ordinances. Note, however, this subsection shall not apply to full-time Employees who, as a condition of their employment, may be entitled to bonuses or other fees in accordance with their employment relationship.

29.7 The WDC hereby expressly represents that it has complied with those sections of the City's Code of Ordinances requiring that it has (1) delivered to the City an affidavit, on a City authored form, stating that the WDC and its affiliates have no delinquent taxes or other financial obligations owned to the City; (2) filed the City authored financial disclosure statement form as set forth in the City's Code of Ordinances regarding disclosure of financial interests; (3) delivered to the City a written acknowledgement, on a City authored form, evidencing receipt of a copy of the "Ethics and Conflict of Interest" ordinance for the City of Waterbury and hereby expressly represents that the WDC is in full compliance with the entirety of said Code of

Ordinances; and (4) filed a current list of all taxable personal and real property as required by the State of Connecticut General Statutes. Any violation of this subsection shall be deemed a material breach of this Contract and shall be a violation of the City's Code of Ordinances.

29.8 INTEREST OF CITY OFFICIALS. No member of the governing body of the City, and no other officer, employee, or agent of the City, who exercises any functions or responsibilities in connection with the carrying out of the project to which this agreement pertains, shall have any personal interest, direct or indirect, in this Agreement.

29.9 PROHIBITION AGAINST CONTINGENCY FEES. The Contractor hereby represents that it has not retained anyone to solicit or secure a contract with the City upon an agreement or understanding for a commission, percentage, brokerage or contingency fee.

29.10 FREEDOM OF INFORMATION ACT NOTICE. Pursuant to State statute, in the event the total compensation payable to the WDC set forth in Section 6 herein is greater than $2,500,000.00, the City is entitled to receive a copy of any and all WDC records and files related to the performance of this contract and those records and files are subject to the Freedom of Information Act ("the Act") and may be disclosed by the City pursuant to the Act.

30. CITY AND WDC DESIGNEES:

30.1 City Designee: The person in charge of administering the services described in this Agreement on behalf of the City ("City Representative") shall be the Mayor and/or his designee as set forth in writing to the WDC.

30.2 WDC Designee: The person responsible for the services to be performed by the WDC as described in this Agreement ("WDC Representative") shall be the Project Manager and the Chief Executive Officer of the WDC or any other individual authorized in writing by the City.

(End of text, signatures to follow)

IN WITNESS WHEREOF, the parties hereto execute this agreement on the dates signed below.

WITNESS:

Andrea Martelli

Patricia Hueson

CITY OF WATERBURY

By: _____
Neil M. O'Leary, Mayor

Date: 1/12/14

APPROVED AS TO FORM

Attorney, Corporation Counsel's Office

WITNESS:

Andrea Martelli

WATERBURY DEVELOPMENT CORPORATION

By: Todd M. Montello
Todd M. Montello, CEO
duly authorized

Date: 12 February 2014

ADDENDA

ADDENDUM A -	CDBG Program Statement of Work; Specific CDBG Certifications
ADDENDUM B -	HOME Program Statement of Work; Specific HOME Certifications
ADDENDUM C - Certifications	Emergency Solutions Grant Statement of Work; ESG
ADDENDUM D -	Project Management Scope of Services

ADDENDUM "A"
CDBG PROGRAM

I. STATEMENT OF WORK.

A. WDC Responsibilities. The WDC shall:

1. Administer all aspects of the CDBG Program for the City in a manner satisfactory to the City and to HUD and consistent with any and all relevant Federal, State, and City standards required by the City and/or by HUD as a condition of providing these funds;

2. Prepare and comply with Citizen Participation Schedule by reviewing all funding requests with the Citizen Advisory Committee;

3. Host all required public hearings;

4. Prepare the five-year Consolidated Plan along with the annual Plan for each program year of the five years of the Consolidated Plan in accordance with HUD regulations as set forth in 24 C.F.R. §91.200, et seq. (The principal components of the Consolidated/Annual Plan consist of an assessment of the community's affordable housing needs, non-housing needs, economic development, neighborhood facilities/infrastructure improvements, and supportive social services);

5. Meet the national objectives guiding the grants and the local use of the funds therefrom, principally to benefit low and moderate-income persons by providing decent housing and fostering a suitable living environment;

6. Publicize the consolidated Plan/Annual Plan, acquiring all required City board/commission approvals, the oversight board approval and submit the plan to HUD yearly for approval;

7. Prepare, in conjunction with the Consolidated/Annual Plan, the Environmental Review Record along with the Request for Release of Funds for all projects in the Consolidated Annual Plan;

8. Upon all funding acceptance and receipt, plan, review and administer all proposed projects. (Funds will be deposited with the City and subsequently transferred to the WDC);

9. Comply with all timeliness, procurement requirements, monitoring and Davis Bacon Wage requirements, when applicable for all proposed projects;

10. File all required reports to HUD regarding funding and project compliance (e.g. IDIS, Labor Reports, MBE reporting, and the ESG Bi-Annual report);

11. At the completion of each program year for the five-year Consolidated Plan, prepare, review and submit the Consolidated Annual Performance and Evaluation Report (CAPER); and

12. Undertake, conduct and perform any and all such other actions, function and/or activities which may be necessary or required to implement and comply with Federal, State and local law and HUD or State regulations relating to the CDBG Program.

B. City of Waterbury Responsibilities. The City shall:

1. Remain primarily responsible to HUD for the grants and programs provided under the Funding Approval/Agreements by and between the City and HUD;

2. Through the Office of the Mayor, prioritize the goals for expenditure of CDBG funds;

3. On a regular basis as required by Federal regulations, oversee and monitor the WDC operations and implementation of the HUD grants and programs;

4. Maintain oversight and control of the approval process for payments and disbursements of such payments as needed by the WDC; and

5. Designate and provide City personnel responsible for such oversight and monitoring, whose services relative to such monitoring shall be paid for from grant funds, as allowable.

II. RECORDS AND REPORTS.

A. Documentation and Record-Keeping.

1. **Records to be Maintained.** The WDC shall maintain all records (i) required by the Federal regulations specified in such regulations as are pertinent to the grants, programs and/or activities to be funded under this Agreement, and (ii) records specified herein. Such records shall include, but not be limited to:

a. Records providing a full description of each activity undertaken;;
b. Records on matching funds, if applicable;
c. Records demonstrating that each activity undertaken meets the objectives of the pertinent grant or program;

d. Records required to determine the eligibility of activities;
e. Records required to document the acquisition, improvement, use or disposition of real property acquired or improved with grant program funds;
f. records documenting compliance with the fair housing and equal opportunity components of the pertinent grant or program; and
g. All other records necessary to document funding and project compliance with relevant law as set forth in Section I.1 hereof.

2. **Retention.** The WDC shall retain all records pertinent to the expenditures incurred under this Agreement for a period of four (4) years after the termination of all activities funded under this Agreement. Records for non-expendable property acquired with funds under this contact shall be retained for four (4) years after final disposition of such property. Records for any displaced person must be kept for four (4) years after he/she has received final payment. Notwithstanding the above, in the event of litigations, claims, audits, negotiations or other actions that involve any of the records cited and that have started before the expiration of the four (4) year period, such records shall be retained until completion of the actions and resolution of all issues, or the expiration of the four (4) year period, whichever occurs later.

3. **Client Data.** The WDC shall maintain client data demonstrating client eligibility for services provided. Such data shall include, but not be limited to, client name, address, income level or other basis for determining eligibility, and description of service provided. Such information shall be made available to the City upon request.

4. **Disclosure.** The WDC understands that client information collected under this Agreement is private and the use or disclosure of such information, when not directly connected with the administration of the City's or WDC's responsibilities with respect to services provided under this Agreement, is prohibited unless prior written consent is obtained from such person receiving service or from a responsible parent/guardian in the case of a minor receiving service or otherwise as required by applicable law.

5. **Property Records.** The WDC shall maintain real property inventory records, which clearly identify properties purchases, improved or sold. Properties retained shall continue to meet eligibility criteria and shall conform to the "changes in use" restrictions specified in applicable regulations. WDC shall further maintain records, which clearly identify any and all personal property and/or fixtures purchased, improved or sold.

6. **Close-Outs.** The WDC's obligation to the City shall not end until all close-out requirements are completed. Activities during this close-out period shall include, but are not limited to, making final payments, disposing or program assets (including the return of all unused materials, equipment, unspent cash advances,

program income balances and accounts receivable to the City), and determine the custodianship of records.

7. **Audits and Inspections.** All WDC records with respect to any matters covered by this Agreement shall be made available to the City, its designee(s) or the Federal Government, at any time during normal business hours, as often as the City deems necessary , to audit, examine, and make excerpts or transcripts of all relevant data. In accordance with applicable regulations and law, the WDC hereby agrees to conduct an annual audit.

THE WDC HEREBY AGREES TO HAVE AN ANNUAL AUDIT CONDUCTED IN ACCORDANCE WITH the "SINGLE AUDIT AMENDMENTS ACT" and the OFFICE OF MANAGEMENT AND BUDGET (OMB) CIRCULAR NO. A-133, titled "AUDITS OF STATE, LOCAL GOVERNMENTS AND NON-PROFIT ORGANIZATIONS" AND SUBMIT A COPY OF THIS AUDIT TO THE CITY WITHIN THIRTY (30) DAYS OF COMPLETION OF SAID AUDIT.

Any deficiencies noted in any audit report(s) shall be fully cleared and remedied by the WDC within thirty (30) calendar days of the City's receipt of such audit report.

Failure of the WDC to comply with this subsection shall be deemed a material breach of this Agreement.

8. **Financial Statements.** WDC shall provide City with audited financial statements for the most recent tax year prior to the start date specified in Section II above, if applicable.

9. **Employee Verification.** All WDC records with respect to WDC employees, including, but not limited to (i) time sheets, (ii) payroll, (iii) cancelled checks, (iv) etc., shall be made available to the City at any time during normal City business hours. The City shall be entitled to interview WDC employees to verify employment information at any time during the WDC's normal business hours as often as City deems necessary.

III. PROGRAM INCOME.

A. Program Income. The WDC shall promptly remit any and all program income, if any, to the City.

IV. UNIFORM ADMINISTRATIVE REQUIRMENTS. WDC shall comply with applicable uniform administrative requirements, as described in 24 C.F.R. §570.502.

V. OTHER PROGRAM REQUIREMENTS. WDC shall carry out each activity in compliance with all Federal laws and regulations described in 24 C.F.R. Part 570, Subpart K, except that:

A. The WDC does not assume the City's environmental responsibilities described at 24 C.F.R. §570.604; and

B. The WDC does not assume the City's responsibility for initiating the review process under the provisions of 24 C.F.R. Part 52.

VI. SUSPENSION AND TERMINATION. In accordance with 24 C.F.R. §85.43, suspension or termination may occur if the WDC materially fails to comply with any term of the award, and that the award may be terminated for convenience in accordance with 24 C.F.R. §85.44.

VII. REVERSION OF ASSETS. Upon the expiration of this Agreement by termination or otherwise, the WDC shall transfer to the City any CDBG funds on hand at the time of expiration and any accounts receivable attributable to the use of CDBG funds. Further, any real property under the WDC control that was acquired or improved in whole or in part with CDBG funds (including CDBG funds provided to the WDC in the form of a loan) in excess of $25,000.00 shall either:

A. Be used to meet on of the national objectives in 24 C.F.R. §570.208 (formerly §570.901) until five years after expiration of the agreement, or for such longer period of time as determined to be appropriate by the City; or

B. If the WDC determines, after consultation with any affected citizens, that it is appropriate to change the use of the property to a use which does not qualify under Paragraph VII A of this section it may retain or dispose of the property for the changed use if the CDBG program is reimbursed in the amount of the current fair market value of the property, less any portion of the value attributable to expenditures of non-CDBG funds for acquisition of, and improvement to, the property. If the change of use occurs after closeout, the provisions governing income from the disposition of the real property in 24 C.F.R. §570.504(b)(4) and (5), as applicable, shall apply to the use of funds reimbursed. Following the reimbursement of the CDBG program in accordance with the Paragraph VII B hereof, the property no longer will be subject to any CDBG requirements.

ADDENDUM "B"
HOME PROGRAM

I. STATEMENT OF THE WORK.

A. WDC Responsibilities. The WDC shall:

1. Administer all aspects of the HOME Program for the City in a manner satisfactory to the City and to HUD and consistent with any and all relevant Federal, State, and City standards required by the City and/or by HUD as a condition of providing these funds;

2. Prepare and comply with the Citizen Participation Schedule by reviewing all line item allocations with the Citizen Advisory Committee;

3. Host all required public hearings;

4. Prepare the five-year Consolidated Plan along with the Annual Plan for each program year of the five years of the Consolidated Plan in accordance with HUD regulations as set forth in 24 C.F.R. §91.200, et seq. (The principal components of the Consolidated/Annual Plan consist of an assessment of the community's affordable housing needs, non-housing needs, economic development, neighborhood facilities/infrastructure improvements, and supportive social services);

5. Meet the national objectives guiding the grants and the local use of the funds therefrom, principally to benefit low and moderate-income persons by providing decent housing and fostering a suitable living environment;

6. Publicize the Consolidated Plan/Annual Plan, acquiring all required City board/commission approvals, the oversight board approval and submit the plan to HUD yearly for approval;

7. Prepare, in conjunction with the Consolidated/Annual Plan, the Environmental Review Record along with the Request for Release of Funds for all projects in the Consolidated Annual Plan;

8. Upon all funding acceptance and receipt, plan, review and administer all proposed projects. (Funds will be deposited with the City and subsequently transferred to the WDC);

9. Comply with all timelines, procurement requirements, monitoring and Davis Bacon Wage requirements, when applicable for all proposed projects;

10. File all required reports to HUD regarding funding and project compliance (e.g. IDIS, Labor Reports, MBE reporting, and the ESG Bi-Annual Report);

11. At the completion of each program year for the five-year Consolidated Plan, prepare, review and submit the Home Annual Performance Report; and

12. Undertake, conduct and perform any and all such other actions, functions and/or activities which may be necessary or required to implement and comply with Federal, State and local law and HUD or State regulations relating to the HOME program.

B. City of Waterbury Responsibilities. The City shall:

1. Remain primarily responsible to HUD for the grants and programs provided under the Funding Approval/Agreements by and between the City and HUD;

2. On a regular basis as required by Federal regulations, oversee and monitor the WDC operations and implementation of the HUD grants and programs;

3. Maintain oversight and control of the approval process for payments and disbursement of such payments as needed by the WDC; and

4. Designate and provide City personnel responsible for such oversight and monitoring.

II. PROGRAM INCOME.

A. Program Income. The WDC shall promptly remit any and all program income, if any, to the City.

III. UNIFORM ADMINISTRATIVE REQUIREMENTS. WDC shall comply with applicable uniform administrative requirements, as describe in 24 C.F.R. §92.505.

IV. OTHER PROGRAM REQUIREMENTS. WDC shall carry out each activity in compliance with all Federal laws and regulations described in 24 C.R.F. Part 92, Subpart H, except that:

A. The WDC does not assume the City's responsibilities for environmental review under 24 C.F.R. §92.352; and

B. The intergovernmental review process in 24 C.F.R. §92.357 does not apply.

V. AFFIRMATIVE MARKETING. If the HOME funds administered by the WDC are used for housing containing five or more assisted units, WDC shall comply with the affirmative marketing responsibilities set forth in 24 C.F.R. §92.351.

VI. REQUESTS FOR DISBURSEMENT OF FUNDS. WDC may not request disbursement of funds under this agreement until the funds are needed for payment of eligible costs. The amount of each request must be limited to the amount needed.

VII. REVERSION OF ASSETS. Upon the expiration of this Agreement by termination or otherwise, the WDC shall transfer to the City and HOME funds on hand at the time of expiration and any accounts receivable attributable to the use of HOME funds.

VIII. RECORDS AND REPORTS.

A. Documentation and Record-Keeping.

1. **Records to be Maintained.** The WDC shall maintain all records (i) required by the Federal regulations specified in such regulations as are pertinent to the grants, programs and/or activities to be funded under this Agreement, and (ii) records specified herein. Such records shall include, but not be limited to:

a. Records providing a full description of each activity undertaken;;
b. Records on matching funds, if applicable;
c. Records demonstrating that each activity undertaken meets the objectives of the pertinent grant or program;
d. Records required to determine the eligibility of activities;
e. Records required to document the acquisition, improvement, use or disposition of real property acquired or improved with grant program funds;
f. records documenting compliance with the fair housing and equal opportunity components of the pertinent grant or program; and
g. All other records necessary to document funding and project compliance with relevant law as set forth in Section I.1 hereof.

2. **Retention.** The WDC shall retain all records pertinent to the expenditures incurred under this Agreement for a period of four (4) years after the termination of all activities funded under this Agreement. Records for non-expendable property acquired with funds under this contact shall be retained for four (4) years after final disposition of such property. Records for any displaced person must be kept for four (4) years after he/she has received final payment. Notwithstanding the above, in the event of litigations, claims, audits, negotiations or other actions that involve any of the records cited and that have started before the expiration of the four (4) year period, such records shall be retained until completion of the actions and resolution of all issues, or the expiration of the four (4) year period, whichever occurs later.

3. **Client Data.** The WDC shall maintain client data demonstrating client eligibility for services provided. Such data shall include, but not be limited to, client name, address, income level or other basis for determining eligibility, and description of service provided. Such information shall be made available to the City upon request.

4. **Disclosure.** The WDC understands that client information collected under this Agreement is private and the use or disclosure of such information, when not directly connected with the administration of the City's or WDC's responsibilities with respect to services provided under this Agreement, is prohibited unless prior written consent is obtained from such person receiving service or from a responsible parent/guardian in the case of a minor receiving service or otherwise as required by applicable law.

5. **Property Records.** The WDC shall maintain real property inventory records, which clearly identify properties purchases, improved or sold. Properties retained shall continue to meet eligibility criteria and shall conform to the "changes in use" restrictions specified in applicable regulations. WDC shall further maintain records, which clearly identify any and all personal property and/or fixtures purchased, improved or sold.

6. **Close-Outs.** The WDC's obligation to the City shall not end until all close-out requirements are completed. Activities during this close-out period shall include, but are not limited to, making final payments, disposing or program assets (including the return of all unused materials, equipment, unspent cash advances, program income balances and accounts receivable to the City), and determine the custodianship of records.

7. **Audits and Inspections.** All WDC records with respect to any matters covered by this Agreement shall be made available to the City, its designee(s) or the Federal Government, at any time during normal business hours, as often as the City deems necessary , to audit, examine, and make excerpts or transcripts of all relevant data. In accordance with applicable regulations and law, the WDC hereby agrees to conduct an annual audit.

THE WDC HEREBY AGREES TO HAVE AN ANNUAL AUDIT CONDUCTED IN ACCORDANCE WITH the "SINGLE AUDIT AMENDMENTS ACT" and the OFFICE OF MANAGEMENT AND BUDGET (OMB) CIRCULAR NO. A-133, titled "AUDITS OF STATE, LOCAL GOVERNMENTS AND NON-PROFIT ORGANIZATIONS" AND SUBMIT A COPY OF THIS AUDIT TO THE CITY WITHIN THIRTY (30) DAYS OF COMPLETION OF SAID AUDIT.

Any deficiencies noted in any audit report(s) shall be fully cleared and remedied by the WDC within thirty (30) calendar days of the City's receipt of such audit report.

Failure of the WDC to comply with this subsection shall be deemed a material breach of this Agreement.

8. **Financial Statements.** WDC shall provide City with audited financial statements for the most recent tax year prior to the start date specified in Section II above, if applicable.

9. **Employee Verification.** All WDC records with respect to WDC employees, including, but not limited to (i) time sheets, (ii) payroll, (iii) cancelled checks, (iv) etc., shall be made available to the City at any time during normal City business hours. The City shall be entitled to interview WDC employees to verify employment information at any time during the WDC's normal business hours as often as City deems necessary.

IX. ENFORCEMENT OF THE AGREEMENT. In accordance with 24 C.F.R. §85.43, suspension or termination may occur if the WDC materially fails to comply with any term of this agreement, and further, this agreement may be terminated for convenience in accordance with 24 C.F.R. §85.44.

X. WRITTEN AGREEMENTS. If the WDC provides HOME funds to for-profit owners or developers, nonprofit owners or developers, sub-recipient, homeowners, home-buyers, tenants receiving tenant-based rental assistance or contractors, the WDC must have a written agreement which meets the requirements of 24 C.F.R. §92.504.

ADDENDUM "C"
EMERGENCY SOLUTIONS GRANTS

I. STATEMENT OF THE WORK.

A. WDC Responsibilities. The WDC shall:

1. Administer all aspects of the ESG Program for the City in a manner satisfactory to the City and to HUD and consistent with any and all relevant Federal, State and City standards required by the City and/or by HUD as a condition of providing these funds;

2. Prepare and comply with the Citizen Participation Schedule by reviewing all funding requests with the Citizen Advisory Committee;

3. Host all required public hearings;

4. Prepare the five-year Consolidated Plan along with the Annual Plan for each program year of the five year of the Consolidated Plan in accordance with HUD regulations as set forth in 24 C.F.R. §91.200, et seq. (The principal components of the Consolidated/Annual Plan consist of an assessment of the community's affordable housing needs, non-housing needs, economic development, neighborhood facilities/infrastructure improvements, and supportive social services);

5. Meet the national objectives guiding the grants and the local use of the funds therefrom, principally to benefit low and moderate-income persons by providing decent housing and fostering a suitable living environment;

6. Publicize the Consolidated Plan/Annual Plan, acquiring all required City board/commission approvals, the oversight board approval and submit the plan to HUD yearly for approval;

7. Prepare, in conjunction with the Consolidated/Annual Plan, the Environmental Review Record along with the Request for Release of Funds for all projects in the Consolidated Annual Plan;

8. Upon all funding and receipt, plan, review and administer all proposed projects. (Funds will be deposited with the City and subsequently transferred to the WDC);

9. Comply with all timeliness, procurement requirements, monitoring and Davis Bacon Wage requirements, when applicable for all proposed projects;

10. File all required reports to HUD regarding funding and project compliance (e.g. IDIS, Labor Reports, MBE reporting, and the ESG Bi-Annual Report);

11. At the completion of each program year for the five-year Consolidated Plan, prepare, review and submit the Consolidated Annual Performance and Evaluation Report (CAPER); and

12. Undertake, conduct and perform any and all such other actions, functions and/or activities which may be necessary or required to implement and comply with Federal, State and local law and HUD or State regulations relating to the ESG Program.

B. City of Waterbury Responsibilities. The City shall:

1. Remain primarily responsible to HUD for the grants and programs provided under the Funding Approval/Agreements by and between the City and HUD;

2. On a regular basis as required by Federal regulations, oversee and monitor the WDC operations and implementation of the HUD grants and programs;

3. Maintain oversight and control of the approval process for payments and disbursement of such payments as needed by the WDC; and

4. Designate and provide City personnel responsible for such oversight and monitoring.

II. PROGRAM INCOME.

A. Program Income. The WDC shall promptly remit any and all program income, if any, to the City.

III. REQUESTS FOR DISBURSEMENT OF FUNDS. WDC may not request disbursement of funds under this agreement until the funds are needed for payment of eligible costs. The amount of each request must be limited to the amount needed.

IV. REVERSION OF ASSETS. Upon the expiration of this Agreement by termination or otherwise, the WDC shall transfer to the City any ESG funds on hand at the time of expiration and any accounts receivable attributable to the use of ESG funds.

V. RECORDS AND REPORTS.

A. Documentation and Record-Keeping.

1. **Records to be Maintained.** The WDC shall maintain all records (i) required by the Federal regulations specified in such regulations as are pertinent to the grants, programs and/or activities to be funded under this Agreement, and (ii) records specified herein. Such records shall include, but not be limited to:

a. Records providing a full description of each activity undertaken;;
b. Records on matching funds, if applicable;
c. Records demonstrating that each activity undertaken meets the objectives of the pertinent grant or program;
d. Records required to determine the eligibility of activities;
e. Records required to document the acquisition, improvement, use or disposition of real property acquired or improved with grant program funds;
f. records documenting compliance with the fair housing and equal opportunity components of the pertinent grant or program; and
g. All other records necessary to document funding and project compliance with relevant law as set forth in Section I.1 hereof.

2. **Retention.** The WDC shall retain all records pertinent to the expenditures incurred under this Agreement for a period of four (4) years after the termination of all activities funded under this Agreement. Records for non-expendable property acquired with funds under this contact shall be retained for four (4) years after final disposition of such property. Records for any displaced person must be kept for four (4) years after he/she has received final payment. Notwithstanding the above, in the event of litigations, claims, audits, negotiations or other actions that involve any of the records cited and that have started before the expiration of the four (4) year period, such records shall be retained until completion of the actions and resolution of all issues, or the expiration of the four (4) year period, whichever occurs later.

3. **Client Data.** The WDC shall maintain client data demonstrating client eligibility for services provided. Such data shall include, but not be limited to, client name, address, income level or other basis for determining eligibility, and description of service provided. Such information shall be made available to the City upon request.

4. **Disclosure.** The WDC understands that client information collected under this Agreement is private and the use or disclosure of such information, when not directly connected with the administration of the City's or WDC's responsibilities with respect to services provided under this Agreement, is prohibited unless prior written consent is obtained from such person receiving service or from a responsible parent/guardian in the case of a minor receiving service or otherwise as required by applicable law.

5. **Property Records.** The WDC shall maintain real property inventory records, which clearly identify properties purchases, improved or sold. Properties retained shall continue to meet eligibility criteria and shall conform to the "changes in use" restrictions specified in applicable regulations. WDC shall further maintain records, which clearly identify any and all personal property and/or fixtures purchased, improved or sold.

6. **Close-Outs.** The WDC's obligation to the City shall not end until all close-out requirements are completed. Activities during this close-out period shall include, but are not limited to, making final payments, disposing or program assets (including the return of all unused materials, equipment, unspent cash advances, program income balances and accounts receivable to the City), and determine the custodianship of records.

7. **Audits and Inspections.** All WDC records with respect to any matters covered by this Agreement shall be made available to the City, its designee(s) or the Federal Government, at any time during normal business hours, as often as the City deems necessary , to audit, examine, and make excerpts or transcripts of all relevant data. In accordance with applicable regulations and law, the WDC hereby agrees to conduct an annual audit.

THE WDC HEREBY AGREES TO HAVE AN ANNUAL AUDIT CONDUCTED IN ACCORDANCE WITH the "SINGLE AUDIT AMENDMENTS ACT" and the OFFICE OF MANAGEMENT AND BUDGET (OMB) CIRCULAR NO. A-133, titled "AUDITS OF STATE, LOCAL GOVERNMENTS AND NON-PROFIT ORGANIZATIONS" AND SUBMIT A COPY OF THIS AUDIT TO THE CITY WITHIN THIRTY (30) DAYS OF COMPLETION OF SAID AUDIT.

Any deficiencies noted in any audit report(s) shall be fully cleared and remedied by the WDC within thirty (30) calendar days of the City's receipt of such audit report.

Failure of the WDC to comply with this subsection shall be deemed a material breach of this Agreement.

8. **Financial Statements.** WDC shall provide City with audited financial statements for the most recent tax year prior to the start date specified in Section II above, if applicable.

9. **Employee Verification.** All WDC records with respect to WDC employees, including, but not limited to (i) time sheets, (ii) payroll, (iii) cancelled checks, (iv) etc., shall be made available to the City at any time during normal City business hours. The City shall be entitled to interview WDC employees to verify

employment information at any time during the WDC's normal business hours as often as City deems necessary.

VI. ENFORCEMENT OF THE AGREEMENT. In accordance with 24 C.F.R. §85.43, suspension or termination may occur if the WDC materially fails to comply with any term of this agreement, and further, this agreement may be terminated for convenience in accordance with 24 C.F.R. §85.44.

VII. WRITTEN AGREEMENTS. If the WDC provides HOME funds to for-profit owners or developers, nonprofit owners or developers, sub-recipient, homeowners, home-buyers, tenants receiving tenant-based rental assistance or contractors, the WDC must have a written agreement which meets the requirements of 24 C.F.R. §92.504.

ADDENDUM "D"
Project Management Scope of Services

1. **Scope of Services.**

A. The WDC shall furnish all of the labor, services, reports, plans, specifications necessary for completion of the Designated Project or Designated Program as specified in a PAL and such shall be completed in a satisfactory manner, as reasonably determined by the City.

B. The WDC will provide such services through the WDC's Administrative and Project Management staff. Where the City determines that additional onsite support staff is required to address City priorities, the WDC will prepare a revised staffing proposal and obtain City approval prior to incurring costs or assigning additional staff. The WDC shall make such revisions or modifications to a PAL as may be required by the City. Revisions or modifications to a PAL required as a result of an error by the WDC will be done at the WDC's sole cost and expense.

C. The WDC shall designate a Project Manager for each Designated Project or Designated Program as the contact person between the City, Mayor's Office, Mayor's Office Staff, City Boards and WDC. The Project Manager shall perform all day to day operations, on site coordination, and decision making with regards to the project. Attendance at Board or Commission meetings or otherwise shall be by the Project Manager, or the CEO of WDC unless another individual is authorized by the City to do so.

D. In performing the services required under this Agreement, the WDC shall consult with the City's designee, as hereinafter set forth, and shall meet, as appropriate, and as directed by the City, with other City employees or officials and with other persons or entities, as necessary, including State and Federal officials and/or neighborhood groups or organizations.

2. **WDC Representations Regarding Qualification and Accreditation.** The WDC represents that, to the extent required by law, its employees are licensed to perform the Work set forth in this Agreement. The WDC further represents that its employees have the requisite skill, expertise and knowledge reasonably necessary to perform the Work required under the terms each PAL, including any supplementary work, and acknowledges that the City relies upon these representations.

A. Representations regarding Personnel. The WDC represents that it has, or will secure at its own expense, all personnel required to perform the services under this agreement. Such personnel shall not be employees of or have any

contractual relationship with the City, unless use of City employees or of personnel having a contractual relationship with the City is approved by the City in writing. As set forth above or unless otherwise provided, all the services required hereunder shall be performed by the WDC under its supervision and all personnel engaged in the work shall be fully qualified and shall be authorized or permitted under state or local law to perform such services.

B. Representations regarding Qualifications. The WDC hereby represents that, to the extent required by Federal, State and Local statutes, regulations, codes, ordinances, and policies, the WDC and/or its employees are licensed, certified, registered, or otherwise qualified, and that the WDC and all employees providing services under this Agreement, are in full compliance with those statutes, regulations and ordinances. Upon City request, the WDC shall provide to the City a copy of the WDC's and/or its employees' licenses, certifications, registrations, etc.

3. **Responsibilities of the WDC.** All data, information, etc. given by the City to the WDC and/or created by the WDC shall be treated by the WDC as proprietary to the City and confidential, unless the City agrees in writing to the contrary, and shall be used solely for the purposes of providing services under this agreement. The WDC agrees to forever hold in confidence all files, records, documents and other information, which may come into the WDC's possession during the term of this agreement, except where a disclosure is expressly stated as a requirement of this agreement. Notwithstanding the foregoing, where a WDC disclosure is required to comply with statute, regulation, or court order, the WDC shall provide prior advance written notice to the City of the need for such disclosure. The WDC agrees to properly implement the services required in the manner herein provided. If a request under the Freedom of Information Act is made to the WDC for information which is rendered by this Agreement as confidential or proprietary to the City, the WDC shall notify the City of the request, and the City thereafter shall be responsible for responding, with the cooperation of the WDC.

A. Use of City Property. To the extent the WDC is required to be on City property to render its services hereunder, the WDC shall have access to such areas of City property as the City and the WDC agree are necessary for the performance of the WDC's services under this agreement (the "Site" or the "Premises") and at such times as the City and the WDC may mutually agree. The WDC shall perform all work in full compliance with Local, State and Federal health and safety regulations. All work hereunder shall be performed in a safe manner. The WDC shall immediately correct any dangerous condition caused by or resulting from its Work. If it fails to correct, or to act diligently to correct, any condition which the City reasonably believes to be a hazard to persons or property, then immediately upon oral or written notice to any supervisory or similar personnel of the WDC, the City may, but shall not be required to, correct same at the WDC's expense. The City shall confirm in writing any oral notice given within two (2) days thereafter.

B. Working Hours. To the extent the WDC is required to be on City property to render its services hereunder, the WDC shall coordinate its schedule so that work on the Premises is performed during those hours the City sets forth in a written notice to the WDC, unless written permission is obtained from the City to work during other times. This condition shall not excuse the WDC from timely performance under the Contract. The work schedule must be agreed upon by the City and the WDC.

C. Cleaning Up. To the extent the WDC is required to be on City property to render its services hereunder, the WDC shall at all times keep the premises free from accumulation of waste materials or rubbish caused by the WDC, its employees or subcontractors, and at the completion of the work shall remove all rubbish from and about the project and all tools, scaffolding and surplus materials and shall leave the Premises "broom clean" or its equivalent, unless more exactly specified. In case of dispute, the City may remove the rubbish and charge the cost to the WDC.

D. Publicity. The WDC agrees not to deliberately disclose the fact that the City has terminated this agreement or disclose any of the terms of the agreement or use the City's name in connection with any publicity, unless the City gives prior written consent to such use of the City's name in each instance.

E. Standard of Performance. All workmanship, services, materials or equipment provided by WDC to complete a PAL, either at the Premises or intended for it, shall conform in all respects with the requirements of the applicable PAL, and shall be the best obtainable from the crafts and trades within the constraints of the PAL budget. In all cases, the services, materials, equipment, reports, plans, specifications, deliverables, workmanship, etc. shall be equal to or better than the grade specified. The standard of care and skill for all services performed by the WDC shall be that standard of care and skill ordinarily used by other members of the WDC's profession practicing under the same or similar conditions at the same time and in the same locality. The WDC's services rendered hereunder shall be rendered completely and by qualified personnel in accordance with standard industry practice.

F. Due Diligence Obligation. The WDC acknowledges its responsibilities to examine and to be thoroughly familiar with the Project and the Program Management Scope of Services, as set forth herein and each individual PAL Agreement. The WDC agrees it will perform commercially reasonable investigation of the physical items, facilities, services or functions essential to the satisfactory performance of each PAL that may be entered into pursuant to this Agreement ("Due Diligence") and hereby certifies that all such items, facilities, services or functions are included in this agreement and hereby warrants that:

(1) It will conduct Due Diligence and, accordingly, any additional costs, services or products resulting solely from the failure of the WDC to complete Due Diligence that is commercially reasonable under the nature or circumstances of a PAL shall be borne by the WDC.

(2) Its failure or omission to make investigation and verification of data shall, in no way, be cause for future claim of ignorance of such data or conditions nor shall such failure to investigate and verify be the basis for any claim whatsoever, monetary or otherwise, other than those that are not reasonably foreseeable;

(3) It is solely responsible for resolving any issues resulting from the failure to conduct Due Diligence that is commercially reasonable under the nature and or circumstances and shall assume any costs that may result during the implementation of a PAL, including, but not limited to, adherence to specifications and pricing for the Project.

(4) It is responsible for specifying any changes and disclosing any new costs. Thus, in the event any changes or costs are disclosed by the WDC, or otherwise required, during the performance of its services, the sole responsibility for any modification, delay and cost of such changes shall reside with the WDC.

(5) It will familiarize itself with the nature and extent of the Contract Documents, work anticipated by a PAL, the locality, and with all local conditions and Federal, State and Local laws, ordinances, rules and regulations that in any manner may affect cost, progress or performance of the Work;

(6) It will give the City written notice of any conflict, error or discrepancy that the WDC discovers in the documents; and

G. Reporting Requirement. The WDC shall deliver written reports upon request to the City setting forth (i) the issue date of the report, (ii) the time period covered by the report, (iii) a brief description of the work and services completed by the WDC and/or delivered by the WDC during the time period covered by the report, (iv) the WDC's declaration as to whether the entirety of the WDC's work and services required in this Agreement will be, or will not be, completed within the contract's Section 6 total compensation amount, and (v) any and all additional useful and/or relevant information. Each report shall be signed by the WDC's Chief Executive Officer.

NOTE, the WDC's failure to deliver any report required herein shall be deemed a material breach of this contract, the City hereby reserving the right to exercise all available legal remedy(ies) to address said breach.

4. **Responsibilities of the City.** Upon the City's receipt of WDC's written request, the City will provide the WDC with all documents, data and other materials reasonably necessary and appropriate to the work to be performed by the WDC under a PAL and the City will endeavor to secure, where feasible and where the City agrees it is necessary and appropriate, materials or information from other sources requested by the WDC for the purpose of carrying out the services under a PAL. The City acknowledges that the Work is advisory and collaborative in nature, that the City is responsible for the timely making of final decisions required by Exhibit B, and that completion of the work contemplated by a PAL requires reasonable cooperation from the City.

EXHIBITS

EXHIBIT A - City Ordinances
§31.269 – WDC Designation of Authority
§38.020-38.071 – Solicitation and Award Methods of Source Selection
§34.15-34.22 – Hiring of Waterbury Residents on Certain Publicly-Funded Construction Projects and as further amended from time-to-time

EXHIBIT B - U.S. Department of Housing and Urban Development
SF 424 – Certifications

EXHIBIT C - CFR Procurement Requirements
24 C.F.R. §84.40 – 84.48

EXHIBIT D - List of Current WDC Projects

EXHIBIT "A"

§31.269 – WDC Designation of Authority

§38.020-38.071 – Solicitation and Award Methods of Source Selection

§34.15-34.22 – Hiring of Waterbury Residents on Certain Publicly-Funded Construction Projects and as further amended from time-to-time

responsible for the day-to-day operation of the WDC and shall see that all actions of the Board are carried into effect.

(B) The CEO shall be knowledgeable regarding municipal economic development and housing matters and shall be hired upon specifications and qualifications set by the Board.

(C) The CEO shall, subject to the by-laws of the WDC, hire employees, staff and consultants, and purchase good and services and construction necessary for the discharge of the duties of his office and the WDC as the CEO deems necessary and/or advisable within the limits of any sums appropriated for those purposes.

(D) The CEO shall report monthly to the Board on the conduct and management of the affairs of the WDC and shall also perform such other duties as are usual and customary to this office.
(Ord. passed 3-7-2005)

§ 31.268 CONDUCT OF BUSINESS.

(A) The WDC shall keep and maintain a regular place of business within the city, which shall be open for business on a customary business schedule.

(B) The WDC shall, at all times, comply and comport itself in accordance with all applicable laws and regulations, as such may be amended, supplemented or replaced.
(Ord. passed 3-7-2005)

§ 31.269 DESIGNATIONS OF AUTHORITY.

(A) The WDC is hereby designated as the city's:

(1) Development Agency, pursuant to Conn. Gen. Stat. § 8-188;

(2) Implementing Agency, pursuant to Conn. Gen. Stat. § 32-224;

(3) Housing Site Development Agency, pursuant to Conn. Gen. Stat. § 8-216b; and

(4) Community Development Agency, pursuant to Conn. Gen. Stat. § 8-169b(c).

(B) Further, the WDC is authorized and empowered to administer, supervise, implement and control the city's:

(1) Enterprise Zone, pursuant to Conn. Gen. Stat. §§ 32-70 *et seq.* and §§ 152.02 *et seq.* of the city code; and

(2) Information Technology Zone (the "ITZ"), pursuant to Conn. Gen. Stat. § 12-65b.

(C) Other projects.

(1) Notwithstanding the provisions of Chapter 38 of the code of ordinances of the city, whenever requested by the Mayor and approved by resolution of the Board of Aldermen, on a project-by-project basis, the WDC is hereby designated, appointed and authorized to act on behalf of the city in the capacity of general contractor, project manager, construction manager, design builder, owner's representative and/or in such other similar development or construction capacity or capacities as may be designated by the Mayor and the Board of Aldermen, for purposes of city-funded construction and/or rehabilitation projects, thereby enabling the city to utilize the WDC's expertise in project design, development and/or management, without the requirement or necessity of a bid.

(2) Further, when requested by the Mayor and approved by resolutions of the Board of Aldermen and the Waterbury Board of Education, on a project-by-project basis, the WDC is hereby designated, appointed and authorized and may perform in the same capacity or capacities as set forth above for any city school construction and/or rehabilitation project.

(3) In any such project as set forth herein, the WDC shall only be allowed to collect and the city shall only be required to pay for the reasonable administrative and out-of pocket costs and expenses of the WDC's services, without the addition or inclusion of any profit. The WDC shall divulge the total estimated amount of such administrative costs and expenses for each such project to the Mayor, the Board of Aldermen and, when appropriate, the Waterbury Board of Education before such designation, appointment and/or approval is made. In furtherance of the disclosure, the WDC shall retain and make all of its books and records available for inspection by the city or its designee, before and throughout the project and for such period of time after its completion as shall be reasonably required to enable the city to comply with any federal, state and/or local law, ordinance or regulation regarding the auditing of the project.

(4) Any procurement, (as such term is defined in § 38.002 of the code of ordinances of the city) by the WDC in connection with work authorized by this section shall be conducted in accordance with the Centralized Procurement System Ordinance of the city (Chapter 38 of the Code of Ordinances of the city) and be performed by or under the direction and supervision of the City's Director of Purchasing, in his sole discretion.

(D) In accordance with such designations, appointments and authorizations, the WDC shall possess, utilize, exercise and discharge all powers and duties granted to it pursuant to the delineated and associated provisions of the state general statutes and/or the Charter and ordinances of the city, as such may be amended, supplemented or replaced, from time to time, in the best interests of the city. (Ord. passed 3-7-2005)

(3) *Cause for removal or termination of employment.* If any public official or employee of the city shall knowingly incur any obligation or shall authorize or make any expenditure in violation of this provision, the action shall be cause for removal from office or termination of employment.
(Ord. passed 6-20-2005)

§ 38.005 PREPARATION OF SPECIFICATIONS.

(A) *Generally.* In accordance with the schedule or any regulations or policies established by the Director of Purchasing, the using agency shall prepare specifications (including, but not limited to, standard terms and conditions), which shall be attached or included in the bid or proposal documents set forth herein.

(1) *Assistance to the using agencies.* The Director of Purchasing may retain or authorize the retention of expert advisors to assist the using agencies.

(2) *Maximum practicable competition.* All specifications shall seek to promote overall economy for the purposes intended and encourage competition in satisfying the city's needs, and shall not be unduly restrictive.

(3) *Specifications prepared by other than city personnel.* The requirements of this chapter regarding standards established for the specifications shall apply to all specifications prepared by city and non-city personnel, including, but not limited to, those prepared by architects, engineers and designers.

(B) *The role of the Director of Purchasing.* The Director of Purchasing shall monitor use of specifications for commodities, services and construction required by the Department of Purchases. Moreover, the Director of Purchasing, is authorized to issue regulations or policies as a means of setting standards for the preparation, maintenance and content of specifications for commodities, services and construction items required by the city.
(Ord. passed 6-20-2005)

PROCUREMENT PROCESS: SOLICITATION AND AWARD; METHODS OF SOURCE SELECTION

§ 38.020 METHODS OF SOURCE SELECTION.

Unless otherwise authorized by, the Charter of the city or this code, all contracts and purchase orders shall be awarded by one of the following methods:

(A) Competitive sealed bidding as set forth in § 38.021 of this chapter;

(B) Competitive sealed proposals as set forth in § 38.022 of this chapter;

(C) Request for qualifications as set forth in § 38.023 of this chapter. Architectural and engineering services shall be solicited as set forth in § 38.023 of this chapter;

(D) Recurring procurements as set forth in § 38.024 of this chapter;

(E) Small purchases as set forth in § 38.025 of this chapter;

(F) Sole source procurement as set forth in § 38.026 of this chapter;

(G) Emergency procurements as set forth in § 38.027 of this chapter;

(H) Waiver of bid or proposal requirement for extraordinary conditions as set forth in § 38.028 of this chapter;

(I) Exempt services are set forth in § 38.029 of this chapter;

(J) Investments or insurance as set forth in § 38.030 of this chapter; and

(K) Other methods of source selection may be established by regulation as may be promulgated by the Director of Purchasing.
(Ord. passed 6-20-2005)

§ 38.021 COMPETITIVE SEALED BIDDING.

(A) *Conditions for use.* Purchase orders or contracts, in an amount in excess of $10,000, shall be awarded by competitive sealed bidding unless the Director of Purchasing determines that an alternate method of source selection, as set forth herein and the referenced sections therein of this chapter, is appropriate.

(B) *Invitation for bids.* An invitation for bids shall be issued and shall include specifications and any other descriptions of the commodity, and all proposed and/or mandatory contractual terms, special terms and conditions applicable to the procurement, other legal and regulatory requirements, including, but not limited to, the requirements of Chapter 93 of the Code of Ordinances. With respect to any particular invitation for bids, the Director of Purchasing or the Corporation Counsel may vary any clauses that may have, prior thereto, been promulgated by the Department of Purchases for inclusion in all invitation for bids. However, the Director of Purchasing does not have the discretion to vary the specifically enumerated legal requirements of the code of ordinances.

(C) *Public notice.* Adequate public notice of the invitation for bids shall be given a reasonable time period prior to the date set forth therein for the opening of bids and in a manner that the Director of Purchasing determines will maximize public participation and competition in the competitive sealed bidding process.

(1) (a) *Generally.* The notice shall be inserted, at least ten calendar days before the final date of submitting bids, in the major daily newspaper published in the city and may, in the sole discretion of the Director of Purchasing, be posted on the Internet.

(b) *Notice following pre-qualification of bidders.* In the event of a multi-step competitive or sealed bid, the notice may be sent only to the vendors qualified to bid.

(2) (a) Each notice of a planned purchase under this chapter shall indicate the type of commodities or services to be purchased.

(b) The using agency shall provide the Director of Purchasing with special notice requirements necessary to comply with the provisions of federal or state grants, loans or reimbursement agreement, when applicable.

(D) *Bid opening.*

(1) Bids shall be opened publicly at the time and place designated in the invitation for bids. The amount of each bid, and such other relevant information as may be specified by policy adopted by the Director of Purchasing, together with the name of each bidder shall be recorded; the record and each bid shall be open to public inspection.

(2) Each bid shall be kept sealed or secured until opened publicly at the time stated in the notice soliciting the bid.

(E) *Bid acceptance and bid evaluation.* Bids shall be unconditionally accepted without alteration or correction, except as authorized in this chapter. The invitation for bid may set forth the evaluation criteria to be used. No criteria may be used in a bid evaluation that are not set forth in the invitation for bids. In the event there is no specific evaluation criterion set forth in the invitation for bids, evaluation will be based on a determination of the lowest responsible, qualified and responsive bidder as set forth in this chapter.

(1) *Evaluation criteria.* Bids shall be evaluated by the Director of Purchasing, or the using agency and/or consultants if so designated by the Director, based on the requirements set forth in the invitation for bids, which may include criteria to determine acceptability such as inspection, testing, quality, workmanship, delivery and suitability for a particular purpose.

(2) *Objectively measurable criteria.* Those criteria that will affect the bid price and be considered in evaluation for award shall be objectively measurable, such as discounts, transportation costs, and total or life cycle costs.

(F) *Correction or withdrawal of bids; cancellation of awards.* Correction or withdrawal of inadvertently erroneous bids before or after award, or cancellation of awards of contracts or purchase orders based on the bid mistakes, shall be permitted with the approval, in writing, of the Director of Purchasing. The actions of the Director of Purchasing shall take into consideration preservation of the integrity of the competitive sealed bidding process under this chapter.

(1) *Prohibited practices following bid opening.* After bid opening, no changes in bid prices or other provisions of bids prejudicial to the interest of the city or fair competition shall be permitted.

(2) *Written determination regarding cancellation of awards or contracts or purchase orders.* Except as otherwise provided by regulation and/or policy, all decisions to permit the correction or withdrawal of bids, or cancel awards of contracts or purchase orders based on bid mistakes shall be supported by a written determination made by the Director of Purchasing.

(G) *Award.*

(1) *Lowest responsible, qualified and responsive bidder.* The contract or purchase order shall be awarded with reasonable promptness by written notice to the lowest responsible, qualified and responsive bidder whose bid meets the requirements and evaluation criteria, if any, set forth in the invitation for bids, or criteria established by the Director of Purchasing.

(a) In considering past performance of a bidder for the purpose of determining the "lowest responsible, qualified and responsive bidder", the Director of Purchasing shall evaluate the skill, ability and integrity of the bidder in terms of the bidder's fulfillment of past contractual obligations and the bidder's experience or lack of experience in delivering equipment, materials, supplies or contractual services of the size or amount for which bids have been solicited.

(b) The Director of Purchasing may reject any or all bids or parts of bids or bids for any one or more commodities or contractual services, when he shall deem that the public interest will be served.

(2) *Construction project exception: permissible adjustment of the bid price.* Unless otherwise prohibited by federal or state law, regulation or agency requirement, with respect to construction projects only, the Director of Purchasing is authorized to negotiate an adjustment of the bid price, including changes in the bid requirements, with the low responsible and responsive bidder, in order to bring the bid within the amount of available funds, in the event:

(a) All bids for a construction project exceed available funds;

(b) The low responsible and responsive bid does not exceed the funds by more than 10%; and

(c) The time or economic considerations preclude re-solicitation of work of a reduced scope.

(H) *Multi-step competitive sealed bidding.* When it is considered impractical to initially issue an invitation for bid, the Director of Purchasing may issue a request for information or request for proposals (requesting technical information) or request for qualifications (requesting the qualifications of bidders) as the first step(s) in the process, to be followed by an invitation for bids which may be limited to those bidders who have been qualified under the criteria set forth in the first solicitation.
(Ord. passed 6-20-2005)

§ 38.022 COMPETITIVE SEALED PROPOSALS.

(A) *Conditions for use.*

(1) Purchase orders or contracts, in excess of $10,000, may be entered into following the issuance of competitive sealed proposals when the Director of Purchasing determines that the use of competitive sealed bidding is either not practicable or not advantageous to the city. As a general rule, the competitive sealed proposal shall be utilized for services, construction contracts and other commodities or services not susceptible to a competitive sealed bid.

(2) Professional services other than architectural and engineering are exempt from the provisions of this chapter; however, using agencies may, in the director of purchasing's discretion, utilize the competitive sealed proposal process set forth herein.

(B) *Requests for proposals.* Proposals shall be solicited through a request for proposals. As required by the Director of Purchasing, a request for information, request for qualifications or other forms of solicitation may be utilized to ascertain information, to establish qualifications, or to establish a list of those eligible to submit bids or proposals at subsequent steps in the procurement process in a manner established by the Director of Purchasing. The solicitations shall also contain, among other things, a description of the projected scope of services or system requirements, a notice of mandatory city contractual provisions or terms and conditions required by this chapter or other state or federal agencies as well as the requirements of Chapter 93 of the code of ordinances. Services shall be selected on the basis of a request for proposals. The Director of Purchasing shall establish guidelines identifying the content of requests for proposals. With respect to any particular request for proposals, the Director of Purchasing or the Corporation Counsel may vary any clauses that may have, prior thereto, been promulgated by the Department of Purchases for inclusion in all request for proposals. However, the Director of Purchasing does not have the discretion to vary the specifically enumerated legal requirements of the code of ordinances.

(C) *Public notice.* Adequate public notice of the request for proposals shall be given a reasonable time period prior to the date set forth therein for the opening of proposals and in a manner that the Director of Purchasing determines will maximize public participation and competition in the competitive sealed proposal process.

(1) The notice shall be inserted, at least ten calendar days before the final date of submitting proposals in the major daily newspaper published in the city and may, in the sole discretion of the Director of Purchasing, be posted on the Internet.

(a) *Notice following pre-qualification of offerors.* In the event of pre-qualification of offerors, the notice may be sent only to the vendors qualified to respond.

(b) *Notice; indication.* Each notice of a planned purchase under this chapter shall indicate the type of commodities or services to be purchased.

(2) The using agency shall provide the Director of Purchasing with special notice requirements necessary to comply with the provisions of federal or state grants, loans or reimbursement agreements.

(D) *Receipt of proposals; register of proposals.* Proposals shall be opened publicly at the time and place designated in the request for proposals. Proposals shall be opened and only the names of each offeror recorded so as to avoid disclosure of contents to competing offerors during the process of negotiation. A register of proposals shall be prepared in a format established by the Director of Purchasing. The register shall be open for public inspection after the award of the contract or purchase order, with the exception of confidential trade and business information withheld in accordance with the general statutes.

(E) *Evaluation factors and criteria.*

(1) The request for proposals shall state all evaluation criteria including, but not limited to:

(a) Demonstrated compliance with the design or other requirements;

(b) Offeror qualifications;

(c) Financial capacity;

(d) Project schedule;

(e) Price or life cycle price, where appropriate; and

(f) Other factors, if any.

(2) Not withstanding the aforementioned criteria, additional factors may be considered at the discretion of the Director of Purchasing prior to the opening of the proposals.

(F) *Correction or withdrawal of proposals; cancellation of awards.* Correction or withdrawal of inadvertently erroneous proposals before or after award, or cancellation of awards of contracts or purchase orders based on the mistakes, may be permitted by the Director of Purchasing, provided that, the determinations by the Director of Purchasing shall take into consideration preservation of the integrity of the competitive sealed proposal process under this chapter.

(1) *Prohibited practices following opening of proposals.* After opening the proposals, no changes in prices or other provisions of proposals prejudicial to the interest of the city or fair competition shall be permitted.

(2) *Written determination regarding cancellation of awards or contracts or purchase orders.* Except as otherwise provided by any regulation and/or policy, all decisions to permit the correction or withdrawal of proposals, or cancel awards of contracts or purchase orders based on proposal mistakes shall be supported by a written determination made by the Director of Purchasing.

(G) *Selection committee.* The Director of Purchasing or his designee shall establish a selection committee of two or more people to review responses to requests for proposals. No member of the selection committee shall have a financial interest in the transaction.

(1) *Review of responses to request for proposals.* The selection committee shall evaluate the responses to requests for proposals. The selection process may include interviews or oral presentations, with the determination of those to be invited to be interviewed or to make an oral presentation to be based on the established evaluation factors.

(2) *Recommendation.* Based on its review, the selection committee shall submit to the Director of Purchasing a list, in rank order based on the established evaluation factors, of no fewer than three firms, if possible.

(3) *Negotiation.* The Director of Purchasing, or his designee, shall negotiate a contract, including in regard to cost and scope, with the firm rated highest by the selection committee.

(4) *Failure to negotiate a contract.* Should the Director of Purchasing, or his designee, be unable to negotiate a satisfactory contract that he determines to be fair and reasonable to the city with the firm selected for negotiations in accordance with this section, the Director of Purchasing, or his designee, may then continue this process, starting with the next highest rated firm on the list established by the selection committee, until such time as a contract determined by the Director of Purchasing to be fair and reasonable to the city is negotiated or until the Director of Purchasing determines that the existing procurement process should be terminated.

(H) *Award.*

(1) *Offer most advantageous to the city.* Award shall be made by the Director of Purchasing, or his designee, to the responsible offeror whose proposal conforms to the solicitation and is determined in writing by the Purchasing Director, or his designee, to be the most advantageous to the city, in accordance with the criteria set forth in the request for proposals or other solicitation, including price and the evaluation factors.

(2) *Contents of transactional files.* The contract or purchase order files shall contain the basis on which the award is made.

(3) *Written notice of award.* Notice of the award of a contract or purchase order shall be promptly given to the successful offeror.
(Ord. passed 6-20-2005)

§ 38.023 REQUESTS FOR QUALIFICATIONS.

(A) *Policy.* The city, at the request of a using agency, may issue a request for qualifications for services for a means of prequalifying a firm prior to proceeding with a competitive seated bid as set forth

herein or a request for proposal as set forth herein. The remaining requirements hereof shall be followed for those firms that are prequalified.

(B) *Solicitation of professional service firms.* The Director of Purchasing shall, upon request of a using agency, issue a request for qualifications in order to encourage firms engaged in the lawful practice of their profession to submit a statement of qualifications and performance data. The request for qualifications shall be published in appropriate trade and professional publications in order to attain the objectives of the policies set forth in this section.

(C) *Selection Committee.* The Director of Purchasing or his designee shall establish a Selection Committee of two or more people to review responses to requests for qualifications. No member of the Selection Committee shall have a financial interest in the transaction.

(1) *Review of responses to request for qualifications.* The Selection Committee shall evaluate the responses to requests for qualifications.

(2) *Recommendation.* Based on its review, the Selection Committee shall submit to the Director of Purchasing a list, in rank order based on the evaluation factors and criteria established by the Selection Committee, of no fewer than three firms, if possible.

(3) *Services other than architectural and engineering services.* For services other than Architectural and Engineering services, upon submission to the Director of Purchasing of the list contemplated under division (C)(2) above, in lieu of the negotiations as contemplated in division (C)(4) below, invitations to bid or requests for proposals, whichever is applicable given the nature of the procurement involved, shall be sent to those appearing on the list. The successful bidder or respondent shall, thereafter, be chosen in accordance with the provisions of either § 38.022 and 38.023, whichever is applicable.

(4) *Architectural and engineering services negotiations.* It is the policy of the city to publicly announce all requirements for architectural and engineering services and to negotiate contracts for architectural or engineering services on the basis of demonstrated competence and qualifications for the type of services required and at fair and reasonable prices.

(a) With respect to the procurement of Architectural and Engineering Services costing $25,000 or more, a list of qualified firms shall be chosen as provided for in divisions (B) and (C)(1) and (2) above. Upon submission to the Director of Purchasing of the list contemplated under division (C)(2) above, the Director of Purchasing, or his designee, shall negotiate a contract with the highest qualified firm at the compensation, which the Director of Purchasing, or his designee, determines in writing to be fair and reasonable to the city.

1. *Considerations.* In preparing a decision the Director of Purchasing, or his designee, shall take into account the estimated value, the scope, the complexity and the professional nature of the services to be rendered.

2. *Failure to negotiate a contract.* Should the Director of Purchasing, or his designee, be unable to negotiate a satisfactory contract with the firm considered to be the most qualified, at a price the Director of Purchasing determines to be fair and reasonable to the city, negotiations with that firm shall be formally terminated. If negotiations are to continue, the Director of Purchasing, or his designee, shall then undertake negotiations with the second most qualified firm. Failing accord with the second most qualified firm, the Director of Purchasing, or his designee, shall formally terminate negotiations. Should the Director of Purchasing, or his designee, be unable to negotiate a contract at a fair and reasonable price with any of the selected firms, the Director of Purchasing, or his designee, shall select additional firms in order of their competence and qualifications and the Director of Purchasing, or his designee, shall continue negotiations in accordance with this section until an agreement is reached. If, at any time during this process, the Director of Purchasing determines that cancellation of the existing procurement process would be in the best interests of the city, he may do so in writing.

(b) With respect to the procurement of Architectural and Engineering Services under $25,000, all such services shall be solicited and selected in accordance with the regulations or policies promulgated by the Director of Purchasing.
(Ord. passed 6-20-2005)

§ 38.024 RECURRING PROCUREMENTS.

(A) *The blanket or consolidated procurement.* The Director of Purchasing shall, wherever appropriate, consolidate the purchase of commodities or services required by the various departments, on a recurring basis, in order to obtain competitive sealed bids or other forms of solicitation to assure the best possible prices. Upon award, the Director of Purchasing shall notify all using agencies of the blanket or consolidated procurement; which shall be valid for the fiscal year in which it was issued.

(B) *Information.* The Director of Purchasing shall circulate to all department heads the pertinent information or catalogs relative to each blanket or consolidated procurement.

(1) *Submission of recurrent commodities and services.* By May 1 of each year, each department head shall submit to the Director of Purchasing an inventory and estimated annual expenditure for commodities or services utilized, on a recurrent basis, in the customary and usual activities of the Department. Within 60 days thereafter, the Director of Purchasing shall determine whether the commodities and services fall into the category of recurrent commodities and, if so, shall solicit such recurrent commodities or services in the appropriate manner set forth in this chapter.

(2) *Issuance of purchase orders on behalf of using agencies.* Upon notice of the award of the blanket or consolidated procurement, the using agencies may submit a requisition, pursuant to § 38.003, for the purchase of the commodities or services. Each using agency shall be limited to the unexpended and unencumbered funds in their budget designated for the purchases and shall be required to file a § 38.004, an encumbrance with the Director of Purchasing.
(Ord. passed 6-20-2005)

§ 38.025 SMALL PURCHASES.

(A) *Small purchases between $2,500 and $9,999.* All procurements where the amount involved is less than $10,000, but equal to or greater than $2,500 shall be made without newspaper advertisement and without observing the procedures for the award of contracts and purchase orders.

(1) *Price alternatives.* All small purchases shall, wherever possible, be based on at least three written price alternatives from qualified bidders, as solicited by the Director of Purchasing or, at his discretion, a representative of the using agency. The notice pertaining to the solicitation shall set forth the time and place for the submission. The notice may be tendered to qualified bidders, by telephone, facsimile or electronically. A record of all notices and price alternatives shall be kept in the records of the Department of Purchases.

(2) *Award.* The Director of Purchasing shall award the purchase order to the lowest responsible bidder. If the purchase order is not given to the lowest responsible bidder, a written explanation shall be made by the Director of Purchasing and be filed as a public record with the other papers to the transaction.

(B) *Small purchases in an amount less than $2,500.* All procurements where the amount involved is less than $2,500 may be awarded on a single bid and, at the Director's discretion, accepted orally by the using agency.

(C) *Sustaining purchase orders.* Sustaining purchase orders may be issued by the Director, in his sole discretion, for the contingent needs of the various departments; but no sustaining purchase orders shall exceed the sum of $1,500.

(D) *Artificial division of procurements prohibited.* The Director of Purchasing has the authority to determine that a using agency has artificially divided procurement requirements so as to constitute a small purchase under this section and thereby prohibit the using agency from utilizing the small purchase procedures.
(Ord. passed 6-20-2005)

§ 38.026 SOLE SOURCE PROCUREMENT.

(A) *A single available source for a commodity, service or construction item.* A contract or purchase order may be awarded for a commodity, service or construction item without competition when, under this section the Director of Purchasing determines, in writing, that there is only one source for the required commodity, service or construction item.

(B) *Factors considered by the Director of Purchases.* Among the factors the Director of Purchasing may take into consideration are the following:

(1) Equipment, material, services or supplies for which there is no comparable competitive product from more than one supplier;

(2) Public utility services from natural or regulated monopolies;

(3) A component or replacement part for which there is no commercially available substitute, and which can be obtained only from the manufacturer;

(4) An item where compatibility is the overriding consideration, such as computer operating software enhancements for an existing system;

(5) Whether there is only one authorized service provider; or

(6) A used item that becomes immediately available and is subject to prior sale.
(Ord. passed 6-20-2005)

§ 38.027 PROCUREMENTS PERTAINING TO PUBLIC EMERGENCIES.

Notwithstanding any other provisions of this chapter, the Mayor may authorize the Director of Purchasing to make emergency procurements when there exists a threat to the lives, health, property, welfare or safety of the citizens of the city.

(A) *Determination of public emergency*. To so authorize the emergency procurements, the Mayor shall act in accordance with a determination of public emergency by:

(1) The President of the United States;

(2) The Governor of the state;

(3) The affirmative vote of eight members of the Board of Aldermen; or

(4) The Mayor, only upon the written advice of the Director of Health or the Superintendent of Police or Fire Chief.

(B) *Written determination*. The Mayor's authorization shall be in writing and include a determination of the basis for the public emergency and the reasons for the selection of the particular contractor. The determination shall be filed with the City Clerk for public inspection within 24 hours of the authorization and forwarded, by the City Clerk, to the Board of Aldermen and Finance and Audit Review Commission.
(Ord. passed 6-20-2005)

§ 38.028 WAIVER OF BID OR PROPOSAL REQUIREMENT: EXTRAORDINARY CONDITIONS.

(A) *Extraordinary conditions or contingencies*. Whenever a situation (that is not deemed a public emergency, as set forth in § 38.027) exists by reason of extraordinary conditions or contingencies that

could not reasonably be foreseen and guarded against (or within the purview of § 38.027 above), or because of unusual trade or market conditions, the Director of Purchasing, may, if it is in the best interest of the city, waive the competitive bid or proposal requirements set forth in §§ 38.021 and 38.022. The determination shall be based upon need and shall not be utilized in order to satisfy preferences or convenience of the using agency, for preventing funds from lapsing at the end of a fiscal year or for any reason that would circumvent the procurement methods set forth in this chapter.

(B) *Filing of an annual report.* A statement of all purchases made under the provisions of this section shall be set forth in the annual report of the Finance and Audit Review Commission.
(Ord. passed 6-20-2005)

§ 38.029 EXEMPT SERVICES.

The following shall be exempt from the competitive bid and proposal process. Using agencies may, nonetheless, elect to undertake a competitive selection process to solicit professional services which are exempt from the competitive bid and proposal process:

(A) Procurement of the services of attorneys-at-law hired by the Corporation Counsel and approved by the Mayor, in accordance with the standards set forth in § 7B-1(d)(5) of the Charter of the city;

(B) Procurement of professional services as defined in § 38.002;

(C) Procurement of architectural and engineering services where entered in compliance with § 38.023 of this chapter;

(D) Procurement of services, equipment or leases of equipment that are necessary for instruction and related services to be provided to individual students with disabilities in accordance with the requirements of the Individuals with Disabilities Act ("I.D.E.A.") and their respective regulations; and

(E) Agreements between:

(1) The city, state and/or federal governments pertaining to grants; or

(2) The city and other community based organizations, universities and other nonprofit entities participating as potential service providers in the application for a competitive grant offered by the federal or state governments.
(Ord. passed 6-20-2005)

§ 38.030 EXEMPT INVESTMENT AND INSURANCE.

Investment of city funds, including those of the pension plan, are exempt from the competitive bid and proposal process contained in this chapter, except for the selection of any investment advisors or managers who direct the investment of the funds. The placement of insurance coverage is exempt from

the competitive bid and proposal process contained in this chapter, except for the selection of the broker who places any insurance on behalf of the city.
(Ord. passed 6-20-2005)

§ 38.031 RECORD OF PROCUREMENT ACTIONS TAKEN WITH REGARD TO SOLE SOURCE, WAIVER AND EMERGENCY PROCUREMENTS.

(A) The Director of Purchasing shall maintain a record, at the Office of the Department of Purchases, listing all contracts or purchase orders made under §§ 38.026 through 38.028 pertaining to sole source, emergency and waiver purchases for a minimum of five fiscal years.

(B) The record shall contain:

(1) Each contractor's name;

(2) The amount and type of each contract or purchase order; and

(3) A listing of the commodities, services or construction procured under each contract or purchase order.
(Ord. passed 6-20-2005)

§ 38.032 FEDERAL AND STATE PROCUREMENT STANDARDS; APPLICATION FOR COMPETITIVE GRANTS.

Notwithstanding the requirements of this chapter, all procurements that include funding by federal or state funds, including the application for competitive grants, shall comply with the procurement and legal requirements of the federal or state laws or regulations.
(Ord. passed 6-20-2005)

§ 38.033 FEDERAL PROCUREMENT SUBJECT TO SECTION 3.

(A) Whenever a recipient receives HUD housing or community development program funds for a project in excess of $200,000, any contractor or subcontractor procured under this chapter for work on such project for a contract in excess of $100,000, shall comply with the city's Section 3 Policy. The Section 3 Policy shall apply to every contractor or subcontractor meeting the $100,000 threshold.

(B) The city shall notify all potential contractors and subcontractors of the Section 3 Policy by including a copy of, or information from, the Section 3 Policy in any request for proposal, bid package and/or contract associated with a Section 3 project. A copy of the Section 3 Policy shall also be made

available for review and inspection at the following locations: City Clerk's Office, 235 Grand Street, Waterbury, CT; City of Waterbury Purchasing Department, 235 Grand Street, Waterbury, CT and Waterbury Development Corporation, 24 Leavenworth Street, Waterbury, CT; as well as on the Purchasing Department website: http://www.waterburyct.org/content/458/930/933.aspx and the Waterbury Development Corporation website: http://www.wdconline.org.
(Ord. passed 2-21-2012)

CANCELLATION OF INVITATIONS FOR BIDS OR REQUEST FOR PROPOSALS

§ 38.045 CANCELLATION OF INVITATION FOR BIDS OR REQUESTS FOR PROPOSALS; WAIVER OF MINOR IRREGULARITIES.

(A) *Cancellation.* The Director of Purchasing may:

(1) Cancel an invitation for bids, a request for proposals or other solicitation; or

(2) Reject any or all bids or proposals, in whole or in part, as may be specified in the invitation for bids, request for proposals, or other solicitation, when he deems it in the best interest of the city, in

accordance with regulations and/or policies, if any. The Director shall set forth his reasons, in writing, which shall be part of the contract file. No written determination shall be required for the cancellation of an entire invitation for bid or request for proposals.

(B) *Waiver of minor irregularities.* The Director of Purchasing may waive minor irregularities in bids and proposals if he determines that such a waiver would be in the best interest of the city. The Director of Purchasing shall state the reasons for any such waiver in writing and include such statement in the contract file.
(Ord. passed 6-20-2005)

QUALIFICATIONS AND DUTIES

§ 38.046 RESPONSIBILITY OF BIDDERS AND OFFERORS.

(A) *Determination of nonresponsibility.* The Director of Purchasing shall make a determination of nonresponsibility of a bidder or offeror. The unreasonable failure of a bidder or offeror to promptly supply information in connection with an inquiry with respect to responsibility may be grounds for a determination of nonresponsibility with respect to the bidder or offeror. The Director of Purchasing may seek the advice of the using agency and the consultants, if any. If requested by the bidder or offeror deemed nonresponsible the Director of Purchasing may provide a written determination.

(B) *Right of nondisclosure.* To the extent permitted by the state general statutes, confidential information furnished by a bidder or offeror pursuant to this chapter shall not be disclosed outside of the Department of Purchases without prior written consent by the bidder or offeror.
(Ord. passed 6-20-2005)

§ 38.047 PREQUALIFICATION OF SUPPLIERS.

As set forth herein, prospective suppliers may be prequalified for particular types of commodities, services and construction. The Director of Purchasing shall determine the method of submitting prequalification information and the information required in order to be prequalified.
(Ord. passed 6-20-2005)

§ 38.048 SUBSTANTIATION OF OFFERED PRICES.

The Director of Purchasing may request factual information reasonably available to the bidder or offeror to substantiate that the price or cost offered, or some portion of it, is reasonable.
(Ord. passed 6-20-2005)

§ 38.049 PREFERENCE FOR BIDDERS AND OFFERORS LOCATED IN THE CITY.

A preference shall be given to a qualified bidder or offeror whose business is located in the city whose bid or proposal falls within 2% of the lowest bid or the preferred proposal. Notwithstanding the foregoing, the 2% preference shall not apply when the bid or proposal exceeds the amount of $20,000 over the lowest qualified bid or preferred proposal. This provision shall apply to commodities or services that are funded entirely by the city general or capital funds.
(Ord. passed 6-20-2005)

§ 38.050 REPORTING OF ANTI-COMPETITIVE PRACTICES.

When for any reason collusion or other anticompetitive practices are suspected among any bidders or offerors, a notice of the relevant facts shall be transmitted to the Corporation Counsel who shall refer the matter to the Attorney General of the State of Connecticut.
(Ord. passed 6-20-2005)

DETERMINATIONS

§ 38.051 RETENTION OF PROCUREMENT RECORDS.

All procurement records shall be retained and disposed of in accordance with the records retention guidelines established by the laws of the State of Connecticut.
(Ord. passed 6-20-2005)

§ 38.052 FINALITY OF DETERMINATIONS.

The determinations of the Director of Purchasing required by the following sections are final and conclusive:

(A) Section 38.069(D) (Contracts: Sale, Lease or Rental of City Property);

(B) Section 38.021(F) (Competitive Sealed Bidding — Correction or Withdrawal of Bids; Cancellation of Awards);

(C) Section 38.022(A) (Competitive Sealed Proposals — Conditions for Use);

(D) Section 38.022(H) (Competitive Sealed Proposals — Award);

(E) Section 38.023 (Requests for Qualifications);

(F) Section 38.024 (Recurring Procurements);

(G) Section 38.025 (Small Purchases);

(H) Section 38.026 (Sole Source Procurement);

(I) Section 38.027 (Procurements Pertaining to Public Emergencies);

(J) Section 38.028 (Waiver of Bid or Proposal Requirements);

(K) Section 38.029 (Exempt Services);

(L) Section 38.032 (Federal and State Procurement Standards);

(M) Section 38.046(A) (Responsibility of Bidders and Offerors — Determination of Nonresponsibility);

(N) Section 38.048 (Substantiation of Offered Prices);

(O) Section 38.049 (Preference for Bidders and Offerors Located in the City); and

(P) Section 38.067 (Contractor Accounting Requirements).
(Ord. passed 6-20-2005)

CONTRACTS AND PURCHASE ORDERS

§ 38.065 OBLIGATIONS OF PERSONS SEEKING A CONTRACT OR PURCHASE ORDER WITH THE CITY; AFFIDAVITS, DISCLOSURES AND ENCUMBRANCES.

(A) (1) No contract, regardless of how procured, shall be awarded by the city to any person until the following documents have been received by the city:

(a) An affidavit of the person that the person, or affiliated entity, has no delinquent taxes or other financial obligation owed to the city; and

(b) Disclosures as required by Chapter 39 this code.

(2) The affidavits and disclosures, if not submitted as part of competitive bid provisions, shall be obtained by the city agency or official seeking the contract.

(B) No contract, regardless of how procured, shall be awarded by the city to any person until a certification has been obtained from the Tax Collector for the city that the person or any affiliated entity, either directly or through a lease, has no back taxes.

(C) No purchase order shall be awarded;

(1) In the event it has been determined that a bidder, offeror or any affiliated entity, either directly or through a lease, owes back taxes to the city; and/or

(2) In the event it has been determined that the bidder, offeror or any affiliated entity has not filed a current list of taxable personal property as required by the general statutes; unless it is otherwise certified that the person is not required to file the list.
(Ord. passed 6-20-2005)

§ 38.066 DISCLOSURES REQUIRED BY THE FEDERAL OR STATE GOVERNMENTS.

In addition to the foregoing, no contract or purchase order shall be awarded by the city to any person, until all affidavits, disclosures and certifications required by the federal or state governments have been executed and delivered as required.
(Ord. passed 6-20-2005)

§ 38.067 CONTRACTOR ACCOUNTING REQUIREMENTS.

The city may require contractors to submit appropriate documentation prior to the award of contracts or purchase orders in which the city agrees to reimburse costs, confirming that:

(A) The proposed contractor's accounting system will permit timely development of all necessary cost data in the form required by the specific contract type contemplated; and

(B) The proposed contractor's accounting system is adequate to allocate costs, if required, in accordance with generally accepted accounting principles.
(Ord. passed 6-20-2005)

§ 38.068 PURCHASE ORDERS; WHEN REQUIRED.

Purchase orders shall be required for all commodities regardless of the amount, unless the Director of Purchasing determines that a contract is necessary. All agreements for services and professional services in an amount less than $50,000 shall be documented by purchase order, unless the scope of services requires the utilization of a contract, as determined by the Director of Purchasing following consultation with the Corporation Counsel.
(Ord. passed 6-20-2005)

§ 38.069 CONTRACTS; WHEN REQUIRED.

(A) *When required.* Contracts shall be required for leases (or other real estate agreements) and for all services and professional services in the amount of $50,000 or more.

(B) *Grants with the federal or state government.*

(1) *Required documentation.* All grants with the federal or state government, otherwise exempt from certain provisions of this chapter, shall be documented in writing and executed as set forth in § 38.072.

(2) *Required review.* All federal or state government grant requests and applications other than those for the Board of Education shall be reviewed by the Office of the City's Budget Director prior to submission.

(3) *Required approvals.* All grant applications and contracts may be subject to approval by the Board of Aldermen if required by federal or state law or as may be otherwise set forth in this code. Notwithstanding the exemption of grants from any other provisions of this Chapter 38, the city will not execute a written agreement pertaining to grants that require matching funds by the city, unless approved by the Board of Aldermen.

(C) *Grants with other agencies.*

(1) *Required documentation.* All grants with agencies other than the federal or state government (other agencies), which are otherwise exempt from certain provisions of this chapter, shall be documented in writing and executed as set forth in § 38.072.

(2) *Required review.* All other agencies grant requests and applications shall be reviewed by the Office of the City's Budget Director prior to submission.

(3) *Required approvals.* All other agencies grant contracts shall be subject to review and approval of the Director of Finance and Corporation Counsel. Notwithstanding the exemption of grants from any other provisions of this Chapter 38, the city will not execute a written agreement pertaining to grants that require matching funds by the city, unless approved by the Board of Aldermen.

(D) *Sale, lease or rental of city property.* Rental, lease, purchase and lease/purchase agreements shall be subject to the requirements of this chapter for competition. The Director of Purchasing shall determine the method of selection and issue a written determination relating thereto. The forgoing notwithstanding, any agreement to transfer or dispose of any city held interest in real property is subject to the following requirements.

(1) The Director of Purchasing shall instruct the City Planner to compile and maintain a list of all real property in which the city may have an interest which, in the opinion of the City Planner, are

eligible for transfer or disposition by the city. The list shall, for each interest in real property appearing thereon, include a description of any conditions to which any such transfer or disposition must be subject in order to ensure the property's use in compliance with any city plan, neighborhood revitalization plan or other similar plan or plans, (as that term is defined under applicable laws, statutes and ordinances), which may have been adopted by, or is otherwise in effect, at the time of the transfer or disposition. The City Planner shall make determinations as to the ownership of any such real property in which the city is suspected to have an interest only after consultation with the Corporation Counsel.

(2) Any such transfer or disposition must first be requested in writing by, or recommended in writing by, the using agency, if any, having direct control over the interest in, real property prior to its transfer or disposition and the City's Property Manager (as designated by the Director of Finance). If any such request or recommendation is made by the Property Manager without identifying a using agency having direct control over the interest, the Property Manager's request or recommendation shall state the reasons for concluding that no using agency is identifiable. If a request or recommendation for such a transfer or disposition is made by a using agency, then the request or recommendation must be forwarded to the Property Manager for approval of the transfer or disposition prior to initiating further proceedings to effectuate the transfer or disposition.

(3) The city may entertain requests for transfer or disposition of any interest in real property from members of the general public and the requests shall be directed to the Property Manager. Upon receipt of such a request by the Property Manager, the Property Manager shall have the discretion to refuse to process the request. Any refusal to process the request shall, upon the request of any interested party, be subject to review by the Board of Aldermen and, upon a simple majority vote thereof, may be overridden.

(4) If a request for transfer or disposition as contemplated under division (D)(3) above is received and a decision to process the same is made, either by the Property Manager or by the Board of Aldermen subsequent to a review of a refusal by the Property Manager, the Property Manager must then determine which using agency has direct control over the interest in real property and obtain the using agency's written approval of the transfer or disposition. If no such using agency can be identified, the Property Manager shall state in writing the reasons for concluding that no using agency is identifiable.

(5) Prior to approving any transfer or disposition, the Property Manager shall be responsible for assuring that the interest in real property sought to be transferred or disposed of appears upon the aforementioned list prepared by the City Planner. If the interest does not appear on the list, then the Property Manager must obtain written authorization for the City Planner for the transfer or disposition. The City Planner's authorization must also state any and all conditions, as mentioned in division (D)(1) above, to which any such transfer or disposition must be subject or state that no such conditions exist.

(6) After obtaining any and all approvals as may be required pursuant to divisions (D)(1) through (5) above, the Property Manager shall, subject to the approval of the Purchasing Director, choose the method of solicitation of bids to be used relative to the given transfer or disposition.

Thereafter, and after consultation with the Director of Purchasing and the Corporation Counsel, the Property Manager shall prepare any required solicitation documents relative to the transfer and disposition of the interest in real property in question. The documents shall include, amongst other things, any relevant selection criteria as recommended by the Director of Purchasing. Upon the completion of the solicitation documents, they shall be presented by the Property Manager to the Director of Purchasing for final approval. The Director of Purchasing shall, thereafter and after consultation with the Corporation Counsel, either approve or reject such solicitation documents. In the event that the documents are rejected the Director of Purchasing shall, by any reasonable means, inform the Property Manager of the perceived deficiencies and of the Director of Purchasing's recommendations for curing the same. Upon curing any such deficiencies, the solicitation documents shall be resubmitted to the Director of Purchasing for approval. Upon ultimate approval of the solicitation documents, the Director of Purchasing shall provide written notice thereof to the Property Manager and to the Corporation Counsel. After the approval by the Director of Purchasing, the Director of Purchasing shall advertise such solicitation or provide such other notice of the proposed transfer or disposition as he deems appropriate under the solicitation method being employed. Any approvals given by, or actions taken by, the Director of Purchasing under this division (D)(6) shall be given or taken in a manner which the Director of Purchasing reasonably deems to be consistent with the principles of competition which are applicable to the solicitation of procurements under this chapter and any restrictions or exceptions provided for in relation to effectuating the principles hereunder.

(7) Upon the receipt of responses to any solicitation as contemplated in division (D)(6) above, the Director of Purchasing shall open them in a manner the Director deems to be consistent with the provisions applicable to the solicitation of procurements under this chapter and shall, thereafter establish a committee to review the same. The committee shall consist of, at a minimum, the Director of Purchasing the Property Manager and the Chief Executive Officer of the Waterbury Development Corporation or his designee. The Mayor may, however, elect to participate on the committee, or to appoint a designee to do so in his stead, if the Mayor deems it to be in the city's best interest to do so. The committee shall either reject all bids or choose one bidder as the successful bidder based upon the selection criteria identified in the solicitation documents.

(8) The Property Manager shall prepare a recommendation to award a contract for the transfer or disposition in question to the successful bidder chosen as contemplated under division (D)(7) above. The Property Manager shall submit the recommendation to the City Plan Commission for a report pursuant to Conn. Gen. Stat. § 8-24, as the same shall be amended from time to time. The Property Manager shall, after a failure of the City Plan Commission to act within the requisite statutory time period or upon issuance of a report by the City Plan Commission, submit the recommendation, and a copy of any related City Plan Commission report, to the Board of Aldermen for action pursuant to the applicable provisions of the Charter of the city as same may be amended from time to time.

(9) The Property Manager shall be responsible for providing the Board of Aldermen, with any and all information required, including evidence of value if applicable and copies of all bids or responses received by the city in pursuant to the solicitation of the bids or responses relative to any given property,

to evaluate and take action on any such recommendation. The Property Manager shall, furthermore, be responsible for obtaining any and all appraisals for properties for which, in the Board's opinion as evidenced by resolution of the Board, a transfer or disposition may be subject to referendum pursuant to the applicable provisions of the Charter of the city, as same may be amended from time to time.

(10) No such transfer or disposition as governed by this section shall be effectuated without the terms thereof having first been included in a contract executed by the city and the successful bidder. Such contract shall be in a form as provided by the Corporation Counsel and shall be subject to any and all other legal requirements relating to approvals of contracts to which the city is a party including approval requirements contained in any applicable state statute, the Charter of the city, this chapter and any other applicable provisions of the code of ordinances.

(11) Any assignment by the city of any liens it may own, as may be authorized pursuant to the state general statutes, shall be exempt from the provisions of this chapter and shall be governed by the applicable state statutory provisions. Nothing herein, however, shall prohibit compliance with any provisions of this chapter in relation to any such assignment if doing so would be in city's best interest. (Ord. passed 6-20-2005)

§ 38.070 EXCEPTIONS.

(A) Notwithstanding the requirements of §§ 38.068 and 38.069, neither a purchase order or a contract shall be required for the following:

(1) Natural gas or electric utilities;

(2) City employee expense reimbursements;

(3) Inter-city department charges; or

(4) Other expenditures at the discretion of the Director of Purchasing.

(B) The encumbrance of funds requirements of § 38.004 of this chapter apply to this section. (Ord. passed 6-20-2005)

§ 38.071 ISSUANCE OF PURCHASE ORDERS.

(A) *Issuance by the Director of Purchasing.* Requisitions by the using agency for the purchase of all commodities regardless of the amount and services under $50,000 shall be reviewed, encumbered and approved by the Budget Director and processed by the Purchasing Department prior to the issuance of a purchase order. In order to meet finance system requirements, purchase orders shall be issued for each contract. In such cases, contract language shall govern over purchase order language.

(B) *Required contents.* A purchase order shall not be complete without inclusion of terms and conditions approved by the Office of the Corporation Counsel, special terms and conditions required by federal and state government funding sources and the identity of the personnel of the using agency responsible for the administration of the transaction covered by the purchase order. Further, the Director of Purchasing shall review, with the consultation of the Corporation Counsel, if deemed necessary, the insurance and bond requirements in order to ascertain compliance with the standards set by the Director of Finance or his designee.
(Ord. passed 6-20-2005)

§ 38.072 EXECUTION OF CONTRACTS.

(A) *Execution by the Mayor.* The Mayor, on behalf of and in the name of the city, shall execute all contracts made by the city.

(B) *Role of the Corporation Counsel.* Upon award of a contract by the Director of Purchasing, the Corporation Counsel or an attorney acting under the authority of the Corporation Counsel shall approve all contracts, both as to form and compliance with all legal requirements of the Charter. In addition to such other legal requirements as may be examined by the Corporation Counsel, a contract shall not be deemed to comply with the legal requirements of the Charter if the Corporation Counsel determines that satisfactory proof of the availability of unexpended, appropriated funds does not exist or if the file does not include each of the following:

(1) A recitation, by the using agency, of the amount of funds to be expended by the terms of the contract, including, but not limited to, a breakdown of funds in each fiscal year of a multi-year transaction, including an estimate of capital funds in subsequent years;

(2) The special terms and conditions required by federal and state government funding sources and the identity of the personnel of the using agency responsible for the administration of the transaction covered by the contract; and

(3) The Corporation Counsel shall review the vendor-submitted insurance and bonds in order to ascertain compliance with the standards set by the Director of Finance or his designee.

(C) *Approval by the Board of Aldermen.* The following shall be subject to Board of Aldermen approval:

(1) All contracts with the exception of contracts for services which are the subject of an exemption hereunder in excess of $50,000;

(2) Any multi-year contract, accompanied by appropriate explanatory information prepared by the Director of Purchasing,

HIRING OF WATERBURY RESIDENTS ON CERTAIN PUBLICLY-FUNDED CONSTRUCTION PROJECTS

§ 34.15 PURPOSE.

The purpose of this subchapter is to increase the benefit to the City of Waterbury and its residents from the city's investment of public funds in certain publicly-funded construction projects to allow the city to recognize, as a benefit of such investment, a reduction in the amount of poverty and unemployment that would otherwise exist amongst its residents and also to help reduce the economic burden that would otherwise be placed on the city in having to provide alternative assistance to those residents who, but for their being hired pursuant to the provisions of this ordinance, would remain unemployed.
(Ord. passed 2-21-2012)

§ 34.16 FINDINGS.

The City of Waterbury finds that a substantial number of city residents are not being employed by contractors performing work on publicly-funded construction projects in the City of Waterbury and that the residents, therefor, are not receiving the maximum possible benefit from the City of Waterbury's investment of public funds in the projects. The city further finds that:

(A) Recent research of hiring patterns on construction projects reveals a pattern of low hiring of residents in favor of nonresidents whose hiring is draining significant resources from the city.

(1) Only 14% of work hours performed on the construction of the $138,000,000 waste water treatment plant in 1998 - 1999 were performed by residents;

(2) Only 10% of laborers hours on city street paving in 1999 were performed by residents;

(3) With an average wage of $21 per hour on tax-funded city construction work as exemplified by the waste water treatment plant construction project, more than $13,000,000 in wages was lost by city residents on that project. Due to typical turnover of those funds among businesses in the community, $13,000,000 - $26,000,000 of additional economic activity from the multiplier affect was lost to city businesses;

(4) As a result of the high percentage of noncity residents on construction projects, fewer Waterbury residents are able to be home owners, thus reducing property taxes to the city. For each resident who loses the opportunity to be a home owner, the city loses an estimated $2,000 in revenue per year.

(5) The migration of benefits caused by the high percentage of noncity residents on construction projects increases the burden on health care providers to provide uncompensated care to Waterbury residents without health insurance. Over the course of the waste water treatment plant project alone, for example, $5,000,000 in health and pension benefits were lost to city residents. If this subchapter were minimally met, it would double the wages and benefits going to city residents; and

(6) The extra cost to tax payers of the under-usage of apprentices on the project compared to what is permissible under state law is estimated at close to $1,000,000.

(B) Waterbury residents face higher rates of unemployment than other towns and cities in the region and state.

(1) The unemployment rate among construction workers who are residents of the city is 50% higher than the statewide unemployment rate among construction workers, and more than double the unemployment rate among construction workers in similarly-sized cities. For example, the Connecticut Department of Labor reports that in September 1999, 324 city residents applied for construction jobs at unemployment offices out of a total construction workforce of 3,600 (9%). Statewide, 3,908 applicants applied out of a total construction labor force of 63,800 (6%). In Danbury, 166 city residents applied out of a total construction workforce of 4,100 (4%).

(2) Since 1984 the city's unemployment rate has been consistently higher than the rate of unemployment in the Naugatuck Valley region and the state. Unemployment is especially severe in some neighborhoods, which faced up to 19% unemployment, compared to the city's 8% unemployment in the 1990 Census.

(C) Poverty is much greater and incomes are much lower in Waterbury than elsewhere in the region and state.

(1) According to the 1990 Census, 12.1% of the city's residents lived below the poverty level, compared to 2.7% in the rest of the region and 6.8% statewide.

(2) Median 1990 household income was $30,533 in Waterbury compared to $41,721 for the state, and compared to $45,000 - $67,500 for towns in the rest of the Naugatuck Valley region. Estimates updating this data to 1997 show little change. Residents on average earn $10,000 less per capita than the statewide average of $28,000.

(3) Poverty is even more pronounced in some neighborhoods with up to 30% of their residents in poverty.

(4) The average wage for residents coming off of welfare in the city is one of the lowest in the State of Connecticut at $5.93 per hour.

(5) Over one-third of female headed households are under poverty.

(6) City children are among the poorest in the State of Connecticut, 61% of students city-wide are eligible for reduced price meals versus 25% statewide.
(Ord. passed 2-21-2012)

§ 34.17 DEFINITIONS.

For the purpose of this subchapter, the following definitions shall apply unless the context clearly indicates or requires a different meaning.

ADMINISTRATOR. The person(s), city department or agency designated by the Mayor of the city with the responsibility of overseeing the implementation and enforcement of this subchapter.

APPRENTICE. Any person currently enrolled in, or who has completed, either an apprenticeship program that complies with the Apprenticeship Standards adopted by the Connecticut State Apprenticeship Council, a training program administered by or on behalf of a legally organized labor union, or a state approved standardized craft training program.

CITY. The City of Waterbury, Connecticut.

CITY FUNDS. Funds originating within the city pursuant to the city's taxing powers or authority to raise money through the sale of public bonds, permit tax abatements and enter into tax fixing agreements and tax increment financing agreements.

CONSTRUCTION. The process of building, altering, repairing, improving or demolishing any public infrastructure facility, including any public structure, public building or other public improvements of any kind to city property or other property or space in which the city has an interest. It does not include the routine operation, routine repair or routine maintenance of any existing public infrastructure facility, including structures, buildings or real property.

CONSTRUCTION PROJECT. Any project for which the primary purpose involves construction, as defined above, deconstruction, the remediation of any hazardous materials as defined in the Connecticut General Statutes, the rehabilitation or renovation of any structure or the creation, extension, reconstruction, reconditioning or rebuilding of any portion of a municipal infrastructure or public utility system.

CONTRACTOR. Any person hired by the city, directly or indirectly through an owner, to perform construction work on covered projects, including subcontractors hired by general contractors.

COVERED PROJECT. Any construction project taking place in the city with a value of $500,000 or greater, funded in whole or in part by city funds or funds administered by the city in accordance with federal or state grant or loan programs or any other federal or state programs pursuant to which the city is funding, in whole or in part, the project. This definition of ***COVERED PROJECT*** shall include funds derived from the aforementioned federal or state grant, loan or other programs only to the extent permitted by federal and state law. The value of the projects shall equal the total consideration to be paid to all contractors stated in each contract pursuant to which contractors are performing construction work on covered projects.

FIRST-SOURCE REFERRAL PROGRAM. A program whose purpose includes but is not limited to, job training and the referral of qualified residents to contractors. The ***FIRST-SOURCE REFERRAL PROGRAM*** shall use the Good Jobs! umbrella coalition of community groups and churches as a priority source for recruitment.

GOOD JOBS ADMINISTRATION BUDGET. The amount of funding required to oversee the implementation and enforcement of this subchapter in a given fiscal year.

HIRING GOAL. The 30% of the total worker hours on each covered project shall be performed by residents. At least 25% of construction trade jobs shall go to apprentices. At least 70% of all "new hires" (those workers hired by a contractor on a project, other than existing employees and those referred by union hiring halls with prior seniority in the case of a union job) shall be "economically disadvantaged" individuals, defined as those earning less than 150% of the poverty line at the time of application. A minimum of 5% of the construction workforce labor hours will be local resident, minority artisans. A minimum of 5% of the construction workforce labor hours will be women. A minimum of 10% of the total work hours shall be allocated for minorities. Contractors are expected to employ a workforce that represents the population of the city.

LIAISON COMMITTEE. The committee established by the Board of Aldermen to monitor compliance with the provisions of this subchapter, and make recommendations to the Administrator and the Board of Aldermen regarding enforcement. The committee shall convene monthly in a space open to the public. The committee shall be comprised of two representatives of the Board of Aldermen one to be appointed by the President of the Board of Aldermen and one to be appointed by the Minority Leader on the Board of Aldermen, one representative from the Board of Education to be appointed by the President of the Board of Education, one representative of the Workforce Development Board, and seven representatives who are appointed by the Board of Aldermen from a list of three nominees submitted by each of the following interested parties: one contractor, one union, one civil rights group, one community and one Human Rights Commission. The committee members shall serve for a term of two years, and this nomination and selection process shall be used to fill any vacancy.

NEW HIRE. Those workers hired by a contractor on a project, other than existing employees, and those referred by union hiring halls with prior seniority in the case of a union job.

OWNER. The person who enters into a contract with a contractor for work on a covered project other than the city.

PERSON. An individual or a company, partnership, foreign or domestic corporation, partnership, limited liability company or other business entity.

RESIDENT. Any person whose domicile is the City of Waterbury, Connecticut.

ROUTINE MAINTENANCE. Simple, small-scale activities (usually requiring only minimal skills or training) planned and performed at regular intervals and being necessary to (1) extend the life of, or to delay or prevent the premature failure of, any plant or system or of any structure or structural system, building component or equipment; or (2) protect against normal wear and tear; or (3) maintain a suitable aesthetic appearance. Examples of ***ROUTINE MAINTENANCE*** may include, but are not limited to, lawn or grass cutting, hedge trimming, painting, caulking, sealing, plumbing or electrical repairs, carpet cleaning or other cleaning performed at regular intervals.
(Ord. passed 2-21-2012)

§ 34.18 HIRING GOAL AND IMPLEMENTATION.

(A) All contractors performing work on covered projects shall make good faith efforts to satisfy the hiring goal.

(B) Any contractors that fail to meet the hiring goal shall be required to demonstrate to the Administrator's satisfaction that the contractor made good faith efforts to meet the hiring goal.

(C) (1) The Mayor of the city shall appoint an Administrator annually no later than June 30th to serve as the Administrator for the city's fiscal year following such appointment or within 30 days of a vacancy that might arise during any fiscal year. The foregoing not withstanding, an incumbent Administrator shall serve until their successor has been appointed and qualified. If, in the event of a vacancy, the Mayor fails to appoint a replacement Administrator within the first 30 days following the effective date of that vacancy, then the Board of Aldermen shall have the power to fill the vacancy provided that the Board does so:

(a) Within 30 days from the date upon which the power to make the appointment vested in the Board; or

(b) Prior to May 31st if the power to make the appointment vests in the Board on or after May 1st.

(2) Should the Board fail to make the appointment during any 30 day period it has to do so, or prior to May 31st if the power to make the appointment vests in the Board on or after May 1st, then

the power of appointment shall revert to the Mayor. Thereafter, throughout the remainder of the then current fiscal year, the power to make the appointment shall alternate between the Mayor and the Board, at 30 day intervals, until an appointment is made or until June 1st at which point in time the power to make the appointment shall vest in the Mayor.

(D) The Mayor shall annually, prior to the adoption of the city's budget for the then next fiscal year and after consultation with the Administrator and all relevant city department heads, establish a Good Jobs Administration Budget for the then next fiscal year and the Mayor shall include a line item in his annual budget submission to the Board of Aldermen sufficient to fund the Good Jobs Administration Budget. If, during the fiscal year in which the Mayor submits a given Good Jobs Administration Budget as part of his budget submission, the city has retained as liquidated damages, pursuant to its contracts for covered projects, an amount greater than or equal to the Good Jobs Administration Budget as then submitted by the Mayor, the city shall be required to fund the Good Jobs Administration Budget as submitted by the Mayor.
(Ord. passed 2-21-2012)

§ 34.19 REFERRAL MECHANISM.

(A) Prior to the commencement of construction on covered projects, the Administrator shall find out from the contractor the number of job positions to be created by the project by trade and the qualifications by job title. The Administrator shall also ensure that adequate job training is available to the extent necessary to achieve the hiring goal and that screening and referral mechanisms are in place so that contractors can access qualified residents. Additionally, the Administrator shall designate a first-source referral program for the city.

(B) In the event a contractor cannot satisfy the hiring goal through its own employees and union hiring halls, the contractor shall next utilize the first source referral program in order to satisfy the hiring goal. The contractor must wait five business days after a request has been submitted before advertising the position elsewhere.

(C) Qualifications required shall be only those relevant to the job. In satisfying the hiring goal, the contractor shall employ all qualified persons referred by the first source referral program. The contractor must utilize the first source referral program whenever its hiring needs increase and they are unable to comply with the hiring goals.
(Ord. passed 2-21-2012)

§ 34.20 MONITORING.

(A) The owner for a covered project shall require all construction contracts to comply with all provisions of this subchapter, and a copy of this subchapter shall be included with all contracts with

contractors performing construction work on covered projects. The subchapter must be a contractual obligation in all contracts.

(B) All contractors performing construction work on covered projects shall submit to the Administrator weekly certified payroll records within five working days of the end of each payroll period. The records must show the person-hours on a craft-by-craft basis and identify the address, social security number, hiring date, ethnicity, gender and trade (journeyperson or apprentice) of all employees on the project. All reports must have an original signature and be signed by an authorized officer or employee of the company. Failure to comply with the provisions of this division (B) may be deemed by the Administrator to be a violation of this subchapter. Any willful misrepresentation contained in the information requested pursuant to this division (B) shall be deemed by the Administrator to be a violation of this subchapter. Unless prohibited by federal, state or local law, all records in the city's possession shall be available for public inspection.

(C) The Administrator shall review all information provided pursuant to division (B) hereof and submit monthly reports to the Liaison Committee and to the Board of Aldermen summarizing the information.
(Ord. passed 2-21-2012)

§ 34.21 GOOD FAITH EFFORTS.

(A) Contractors shall be deemed to have made good faith efforts if they demonstrate to the satisfaction of the Administrator that they have done all of the following:

(1) Utilize the first source referral program to help satisfy the hiring goal;

(2) Notify the public in the city of the employment opportunities available on covered projects. The notification shall comprise a notice in a newspaper of general circulation in the city of employment opportunities, written notice to construction unions, community organizations and city high schools concerning same, and any other notice required by the Administrator. Contractors shall maintain records of responses to the notices received thereby. All notices must state that all qualified applicants will receive consideration without regard to race, color, religion, sex or national origin. The notice required by this division shall include a statement that the notice is provided pursuant to this subchapter;

(3) Maintain a file on the job site of the names and addresses of each worker referred by the first source referral program. The file shall indicate what action was taken with respect to each referred person, and if the person was not hired, the reasons therefore; provided, however, that this subchapter shall not be construed as requiring contractors to hire any persons who do not satisfy applicable job qualifications;

(4) Participate in State of Connecticut-approved local employment training programs in the city's area, or develop on-the-job training opportunities and participate and assist in any association or employer-group training program relevant to the contractor's employment needs;

(5) Regularly review and evaluate their personnel and promotional opportunities, encourage city residents to seek opportunities and establish a program to monitor compliance with this subchapter; and

(6) Utilize other means of obtaining employees who are residents of the city that are reasonably calculated to assist with achieving the hiring goals.

(B) Contractors shall provide the city with any documentation requested by the Administrator in order to establish compliance with this subchapter.
(Ord. passed 2-21-2012)

§ 34.22 CONTRACT REQUIREMENTS FOR COVERED SERVICES.

(A) This city shall include provisions in Chapter 38, entitled "Centralized Procurement System," of the Code of Waterbury, mandating that each contract for a covered project, as that term is defined herein, awarded pursuant to Chapter 38 include provisions addressing compliance with the provisions of this subchapter by the contractor or contractors thereunder and by any subcontractor or subcontractors performing work related to any such contract.

(B) Whenever provisions are included in a contract for a covered project pursuant to division (A) of this section, they shall include provisions establishing liquidated damages for the failure of any contractor or subcontractor to comply with the provisions of this subchapter. The liquidated damages shall be based on an estimate of the cost the city would incur in having to provide alternative employment opportunities, or alternative economic assistance, to those residents who would have benefited by the city's investment in the covered project if they had been hired by the contractor or subcontractor had they complied with the provisions of this subchapter.

(C) Whenever provisions regarding liquidated damages are included in a contract for a covered project pursuant to division (B) of this section, that contract shall, if applicable, also include provisions addressing the following matters:

(1) Weekly compliance reviews by the Administrator for the purpose of assessing compliance with the provisions of this subchapter, or the lack thereof;

(2) Requiring a separate certification of compliance by the Administrator prior to the payment of any funds by the city under any such contract;

(3) The assessment of liquidated damages while said contract is executory;

(4) The retention, by the city, of funds due from it under the contract in amounts sufficient to offset any assessment of liquidated damages outstanding at the time the funds are due from the city.
(Ord. passed 2-21-2012)

EXHIBIT "B"

U.S. Department of Housing and Urban Development
SF 424 – Certifications

SF 424

The SF 424 is part of the CPMP Annual Action Plan. SF 424 form fields are included in this document. Grantee information is linked from the 1CPMP.xls document of the CPMP tool.

SF 424

Complete the fillable fields (blue cells) in the table below. The other items are pre-filled with values from the Grantee Information Worksheet.

Date Submitted	Applicant Identifier	Type of Submission	
Date Received by state	State Identifier	Application	Pre-application
Date Received by HUD	Federal Identifier	☐ Construction	☐ Construction
		☐ Non Construction	☐ Non Construction
Applicant Information			
Jurisdiction		CT91194 WATERBURY	
City of Waterbury		877983022	
C/O Waterbury Development Corporation			
Waterbury	Connecticut		
06702	Country U.S.A.		
Employer Identification Number (EIN):		New Haven	
06-6001900		7/1	
Applicant Type:		**Specify Other Type if necessary:**	
Local Government: City			
Program Funding		**U.S. Department of Housing and Urban Development**	
Catalogue of Federal Domestic Assistance Numbers; Descriptive Title of Applicant Project(s); Areas Affected by Project(s) (cities, Counties, localities etc.); Estimated Funding			
Community Development Block Grant		14.218 Entitlement Grant	
CDBG Project Titles		Description of Areas Affected by CDBG Project(s)	
$ 1,996,547 CDBG Grant Amount	Additional HUD Grant(s) Levereged	Describe	
$Additional Federal Funds Leveraged		$Additional State Funds Leveraged	
$Locally Leveraged Funds		$Grantee Funds Leveraged	
$12,000 Anticipated Program Income		Other (Describe) $100,000 reprogrammed funds	
Total Funds Leveraged for CDBG-based Project(s)			
Home Investment Partnerships Program		14.239 HOME	
HOME Project Titles		Description of Areas Affected by HOME Project(s)	
$ 709,624 Home Grant Amount	$Additional HUD Grant(s) Leveraged	Describe	
$Additional Federal Funds Leveraged		$Additional State Funds Leveraged	
$Locally Leveraged Funds		$Grantee Funds Leveraged	

$16,300 Anticipated Program Income	Other (Describe)
Total Funds Leveraged for HOME-based Project(s)	

Housing Opportunities for People with AIDS	14.241 HOPWA	
HOPWA Project Titles	Description of Areas Affected by HOPWA Project(s)	
$HOPWA Grant Amount	$Additional HUD Grant(s) Leveraged	Describe
$Additional Federal Funds Leveraged	$Additional State Funds Leveraged	
$Locally Leveraged Funds	$Grantee Funds Leveraged	
$Anticipated Program Income	Other (Describe)	
Total Funds Leveraged for HOPWA-based Project(s)		

Emergency Solutions Grants Program	14.231 ESG	
ESG Project Titles	Description of Areas Affected by ESG Project(s)	
$137,010 ESG Grant Amount	$Additional HUD Grant(s) Leveraged	Describe
$Additional Federal Funds Leveraged	$Additional State Funds Leveraged	
$Locally Leveraged Funds	$Grantee Funds Leveraged	
$Anticipated Program Income	Other (Describe)	
Total Funds Leveraged for ESG-based Project(s)		

Congressional Districts of: CT-003 & CT-005		Is application subject to review by state Executive Order 12372 Process?	
Applicant Districts	Project Districts	☐ Yes	This application was made available to the state EO 12372 process for review on DATE
Is the applicant delinquent on any federal debt? If "Yes" please include an additional document explaining the situation.		☒ No	Program is not covered by EO 12372
☐ Yes	☒ No	☐ N/A	Program has not been selected by the state for review

Person to be contacted regarding this application		
Kevin	M.	DelGobbo
Chief Executive Officer	Phone: 203-346-2607	Fax: 203-346-3910
Email: DelGobbo@wdconline.org	Website: www.wdconline.org	Other:
Signature of Authorized Representative Neil M. O'Leary, Mayor		Date Signed 7/10

CERTIFICATIONS

In accordance with the applicable statutes and the regulations governing the consolidated plan regulations, the jurisdiction certifies that:

Affirmatively Further Fair Housing – The jurisdiction will affirmatively further fair housing, which means it will conduct an analysis of impediments to fair housing choice within the jurisdiction, take appropriate actions to overcome the effects of any impediments identified through that analysis, and maintain records reflecting that analysis and actions in this regard.

Anti-displacement and Relocation Plan -- It will comply with the acquisition and relocation requirements of the Uniform Relocation Assistance and Real Property Acquisition Policies Act of 1970, as amended, and implementing regulations at 49 CFR 24; and it has in effect and is following a residential antidisplacement and relocation assistance plan required under section 104(d) of the Housing and Community Development Act of 1974, as amended, in connection with any activity assisted with funding under the CDBG or HOME programs.

Drug Free Workplace – It will or will continue to provide a drug-free workplace by:

1. Publishing a statement notifying employees that the unlawful manufacture, distribution, dispensing, possession, or use of a controlled substance is prohibited in the grantee's workplace and specifying the actions that will be taken against employees for violation of such prohibition;

2. Establishing an ongoing drug-free awareness program to inform employees about -

   (a) The dangers of drug abuse in the workplace;
   (b) The grantee's policy of maintaining a drug-free workplace;
   (c) Any available drug counseling, rehabilitation, and employee assistance programs; and
   (d) The penalties that may be imposed upon employees for drug abuse violations occurring in the workplace;

3. Making it a requirement that each employee to be engaged in the performance of the grant be given a copy of the statement required by paragraph 1;

4. Notifying the employee in the statement required by paragraph 1 that, as a condition of employment under the grant, the employee will -

   (a) Abide by the terms of the statement; and

   (b) Notify the employer in writing of his or her conviction for a violation of a criminal drug statute occurring in the workplace no later than five calendar days after such conviction;

5. Notifying the agency in writing, within ten calendar days after receiving notice under subparagraph 4(b) from an employee or otherwise receiving actual notice of such conviction. Employers of convicted employees must provide notice, including position title, to every grant officer or other designee on whose grant activity the convicted employee was working, unless the Federal agency has designated a central point for the receipt of such notices. Notice shall include the identification number(s) of each affected grant;

6. Taking one of the following actions, within 30 calendar days of receiving notice under subparagraph 4(b), with respect to any employee who is so convicted -

(a) Taking appropriate personnel action against such an employee, up to and including termination, consistent with the requirements of the Rehabilitation Act of 1973, as amended; or

(b) Requiring such employee to participate satisfactorily in a drug abuse assistance or rehabilitation program approved for such purposes by a Federal, State, or local health, law enforcement, or other appropriate agency;

7. Making a good faith effort to continue to maintain a drug-free workplace through implementation of paragraphs 1, 2, 3, 4, 5 and 6.

Anti-Lobbying -- To the best of the jurisdiction's knowledge and belief:

1. No Federal appropriated funds have been paid or will be paid, by or on behalf of it, to any person for influencing or attempting to influence an officer or employee of any agency, a Member of Congress, an officer or employee of Congress, or an employee of a Member of Congress in connection with the awarding of any Federal contract, the making of any Federal grant, the making of any Federal loan, the entering into of any cooperative agreement, and the extension, continuation, renewal, amendment, or modification of any Federal contract, grant, loan, or cooperative agreement;

2. If any funds other than Federal appropriated funds have been paid or will be paid to any person for influencing or attempting to influence an officer or employee of any agency, a Member of Congress, an officer or employee of Congress, or an employee of a Member of Congress in connection with this Federal contract, grant, loan, or cooperative agreement, it will complete and submit Standard Form-LLL, "Disclosure Form to Report Lobbying," in accordance with its instructions; and

3. It will require that the language of paragraph 1 and 2 of this anti-lobbying certification be included in the award documents for all subawards at all tiers (including subcontracts, subgrants, and contracts under grants, loans, and cooperative agreements) and that all subrecipients shall certify and disclose accordingly.

Authority of Jurisdiction -- The consolidated plan is authorized under State and local law (as applicable) and the jurisdiction possesses the legal authority to carry out the programs for which it is seeking funding, in accordance with applicable HUD regulations.

Consistency with plan -- The housing activities to be undertaken with CDBG, HOME, ESG, and HOPWA funds are consistent with the strategic plan.

Section 3 -- It will comply with section 3 of the Housing and Urban Development Act of 1968, and implementing regulations at 24 CFR Part 135.

Neil M. O'Leary — Date: 1/10/13

Mayor, City of Waterbury

EXHIBIT "C"
CFR Procurement Requirements
24 C.F.R. §84.40 – 84.48

Code of Federal Regulations
Title 24. Housing and Urban Development
Subtitle A. Office of the Secretary, Department of Housing and Urban Development
Part 84. Uniform Administrative Requirements for Grants and Agreements with Institutions of Higher Education, Hospitals, and Other Non--Profit Organizations (Refs & Annos)
Subpart C. Post--Award Requirements
Procurement Standards

24 C.F.R. § 84.40

§ 84.40 Purpose of procurement standards.

Currentness

Sections 84.41 through 84.48 set forth standards for use by recipients in establishing procedures for the procurement of supplies and other expendable property, equipment, real property and other services with Federal funds. These standards are furnished to ensure that such materials and services are obtained in an effective manner and in compliance with the provisions of applicable Federal statutes and executive orders. No additional procurement standards or requirements shall be imposed by HUD upon recipients, unless specifically required by Federal statute or executive order or approved by OMB.

SOURCE: 59 FR 47011, Sept. 13, 1994; 65 FR 30499, May 11, 2000, unless otherwise noted.

AUTHORITY: 42 U.S.C. 3535(d).

Current through January 16, 2014; 79 FR 3039

End of Document

© 2014 Thomson Reuters. No claim to original U.S. Government Works.

Code of Federal Regulations
Title 24. Housing and Urban Development
Subtitle A. Office of the Secretary, Department of Housing and Urban Development
Part 84. Uniform Administrative Requirements for Grants and Agreements with Institutions of Higher Education, Hospitals, and Other Non–Profit Organizations (Refs & Annos)
Subpart C. Post–Award Requirements
Procurement Standards

24 C.F.R. § 84.41

§ 84.41 Recipient responsibilities.

Currentness

The standards contained in this section do not relieve the recipient of the contractual responsibilities arising under its contract(s). The recipient is the responsible authority, without recourse to HUD, regarding the settlement and satisfaction of all contractual and administrative issues arising out of procurements entered into in support of an award or other agreement. This includes disputes, claims, protests of award, source evaluation or other matters of a contractual nature. Matters concerning violation of statute are to be referred to such Federal, State or local authority as may have proper jurisdiction.

SOURCE: 59 FR 47011, Sept. 13, 1994; 65 FR 30499, May 11, 2000, unless otherwise noted.

AUTHORITY: 42 U.S.C. 3535(d).

Current through January 16, 2014; 79 FR 3039

End of Document

© 2014 Thomson Reuters. No claim to original U.S. Government Works.

Code of Federal Regulations
Title 24. Housing and Urban Development
Subtitle A. Office of the Secretary, Department of Housing and Urban Development
Part 84. Uniform Administrative Requirements for Grants and Agreements with Institutions of Higher Education, Hospitals, and Other Non–Profit Organizations (Refs & Annos)
Subpart C. Post–Award Requirements
Procurement Standards

24 C.F.R. § 84.42

§ 84.42 Codes of conduct.

Currentness

The recipient shall maintain written standards of conduct governing the performance of its employees engaged in the award and administration of contracts. No employee, officer, or agent shall participate in the selection, award, or administration of a contract supported by Federal funds if a real or apparent conflict of interest would be involved. Such a conflict would arise when the employee, officer, or agent, any member of his or her immediate family, his or her partner, or an organization which employs or is about to employ any of the parties indicated herein, has a financial or other interest in the firm selected for an award. The officers, employees, and agents of the recipient shall neither solicit nor accept gratuities, favors, or anything of monetary value from contractors, or parties to subagreements. However, recipients may set standards for situations in which the financial interest is not substantial or the gift is an unsolicited item of nominal value. The standards of conduct shall provide for disciplinary actions to be applied for violations of such standards by officers, employees, or agents of the recipient.

SOURCE: 59 FR 47011, Sept. 13, 1994; 65 FR 30499, May 11, 2000, unless otherwise noted.

AUTHORITY: 42 U.S.C. 3535(d).

Current through January 16, 2014; 79 FR 3039

End of Document

© 2014 Thomson Reuters. No claim to original U.S. Government Works.

Code of Federal Regulations
Title 24. Housing and Urban Development
Subtitle A. Office of the Secretary, Department of Housing and Urban Development
Part 84. Uniform Administrative Requirements for Grants and Agreements with Institutions of Higher Education, Hospitals, and Other Non–Profit Organizations (Refs & Annos)
Subpart C. Post–Award Requirements
Procurement Standards

24 C.F.R. § 84.43

§ 84.43 Competition.

Currentness

All procurement transactions shall be conducted in a manner to provide, to the maximum extent practical, open and free competition. The recipient shall be alert to organizational conflicts of interest as well as noncompetitive practices among contractors that may restrict or eliminate competition or otherwise restrain trade. In order to ensure objective contractor performance and eliminate unfair competitive advantage, contractors that develop or draft specifications, requirements, statements of work, invitations for bids and/or requests for proposals shall be excluded from competing for such procurements. Awards shall be made to the bidder or offeror whose bid or offer is responsive to the solicitation and is most advantageous to the recipient, price, quality and other factors considered. The other factors shall include the bidder's or offeror's compliance with Section 3 of the Housing and Urban Development Act of 1968 (12 U.S.C. 1701u), hereafter referred to as "Section 3." Section 3 provides that, to the greatest extent feasible, and consistent with existing Federal, State, and local laws, and regulations, economic opportunities generated by certain HUD financial assistance shall be directed to low- and very low-income persons. Solicitations shall clearly set forth all requirements that the bidder or offeror shall fulfill in order for the bid or offer to be evaluated by the recipient. Any and all bids or offers may be rejected when it is in the recipient's interest to do so.

SOURCE: 59 FR 47011, Sept. 13, 1994; 65 FR 30499, May 11, 2000, unless otherwise noted.

AUTHORITY: 42 U.S.C. 3535(d).

Current through January 16, 2014; 79 FR 3039

Code of Federal Regulations
Title 24. Housing and Urban Development
Subtitle A. Office of the Secretary, Department of Housing and Urban Development
Part 84. Uniform Administrative Requirements for Grants and Agreements with Institutions of Higher Education, Hospitals, and Other Non–Profit Organizations (Refs & Annos)
Subpart C. Post–Award Requirements
Procurement Standards

24 C.F.R. § 84.44

§ 84.44 Procurement procedures.

Effective: January 28, 2008
Currentness

(a) All recipients shall establish written procurement procedures. These procedures shall provide for, at a minimum, that paragraphs (a)(1), (a)(2) and (a)(3) of this section apply.

(1) Recipients avoid purchasing unnecessary items.

(2) Where appropriate, an analysis is made of lease and purchase alternatives to determine which would be the most economical and practical procurement for the Federal Government.

(3) Solicitations for goods and services provide for all of the following.

(i) A clear and accurate description of the technical requirements for the material, product or service to be procured. In competitive procurements, such a description shall not contain features which unduly restrict competition.

(ii) Requirements which the bidder/offeror must fulfill and all other factors to be used in evaluating bids or proposals.

(iii) A description, whenever practicable, of technical requirements in terms of functions to be performed or performance required, including the range of acceptable characteristics or minimum acceptable standards.

(iv) The specific features of "brand name or equal" descriptions that bidders are required to meet when such items are included in the solicitation.

(v) The acceptance, to the extent practicable and economically feasible, of products and services dimensioned in the metric system of measurement.

(vi) Preference, to the extent practicable and economically feasible, for products and services that conserve natural resources and protect the environment and are energy efficient.

(b) Positive efforts shall be made by recipients to utilize small businesses, minority-owned firms, and women's business enterprises, whenever possible. Recipients of Federal awards shall take all of the following steps to further this goal.

(1) Ensure that small businesses, minority-owned firms, and women's business enterprises are used to the fullest extent practicable.

(2) Make information on forthcoming opportunities available and arrange time frames for purchases and contracts to encourage and facilitate participation by small businesses, minority-owned firms, and women's business enterprises.

(3) Consider in the contract process whether firms competing for larger contracts intend to subcontract with small businesses, minority-owned firms, and women's business enterprises.

(4) Encourage contracting with consortiums of small businesses, minority-owned firms and women's business enterprises when a contract is too large for one of these firms to handle individually.

(5) Use the services and assistance, as appropriate, of such organizations as the Small Business Administration and the Department of Commerce's Minority Business

Development Agency in the solicitation and utilization of small businesses, minority-owned firms and women's business enterprises.

(c) The type of procuring instruments used (e.g., fixed price contracts, cost reimbursable contracts, purchase orders, and incentive contracts) shall be determined by the recipient but shall be appropriate for the particular procurement and for promoting the best interest of the program or project involved. The "cost-plus-a-percentage-of-cost" or "percentage of construction cost" methods of contracting shall not be used.

(d) Contracts shall be made only with responsible contractors who possess the potential ability to perform successfully under the terms and conditions of the proposed procurement. Consideration shall be given to such matters as contractor integrity; compliance with public policy, including, where applicable, Section 3 of the Housing and Urban Development Act of 1968 (12 U.S.C. 1701u); record of past performance; and financial and technical resources or accessibility to other necessary resources. In certain circumstances, contracts with certain parties are restricted by implementation of Executive Orders 12549 and 12689, "Debarment and Suspension," at 2 CFR part 2424.

(e) Recipients shall, on request, make available for the Federal awarding agency, pre-award review and procurement documents, such as requests for proposals or invitations for bids, independent cost estimates, etc., when any of the following conditions apply.

(1) A recipient's procurement procedures or operation fails to comply with the procurement standards in HUD's implementation of Circular A–110.

(2) The procurement is expected to exceed $100,000 or the small purchase threshold fixed at 41 U.S.C. 403 (11), whichever is greater, and is to be awarded without competition or only one bid or offer is received in response to a solicitation.

(3) The procurement, which is expected to exceed the small purchase threshold, specifies a "brand name" product.

(4) The proposed award over the small purchase threshold is to be awarded to other than the apparent low bidder under a sealed bid procurement.

(5) A proposed contract modification changes the scope of a contract or increases the contract amount by more than the amount of the small purchase threshold.

Credits
[72 FR 73492, Dec. 27, 2007]

SOURCE: 59 FR 47011, Sept. 13, 1994; 65 FR 30499, May 11, 2000, unless otherwise noted.

AUTHORITY: 42 U.S.C. 3535(d).

Current through January 16, 2014; 79 FR 3039

End of Document

© 2014 Thomson Reuters. No claim to original U.S. Government Works.

Code of Federal Regulations
Title 24. Housing and Urban Development
Subtitle A. Office of the Secretary, Department of Housing and Urban Development
Part 84. Uniform Administrative Requirements for Grants and Agreements with Institutions of Higher Education, Hospitals, and Other Non–Profit Organizations (Refs & Annos)
Subpart C. Post–Award Requirements
Procurement Standards

24 C.F.R. § 84.45

§ 84.45 Cost and price analysis.

Currentness

Some form of cost or price analysis shall be made and documented in the procurement files in connection with every procurement action. Price analysis may be accomplished in various ways, including the comparison of price quotations submitted, market prices and similar indicia, together with discounts. Cost analysis is the review and evaluation of each element of cost to determine reasonableness, allocability and allowability.

SOURCE: 59 FR 47011, Sept. 13, 1994; 65 FR 30499, May 11, 2000, unless otherwise noted.

AUTHORITY: 42 U.S.C. 3535(d).

Current through January 16, 2014; 79 FR 3039

End of Document

© 2014 Thomson Reuters. No claim to original U.S. Government Works.

Code of Federal Regulations
Title 24. Housing and Urban Development
Subtitle A. Office of the Secretary, Department of Housing and Urban Development
Part 84. Uniform Administrative Requirements for Grants and Agreements with Institutions of Higher Education, Hospitals, and Other Non–Profit Organizations (Refs & Annos)
Subpart C. Post–Award Requirements
Procurement Standards

24 C.F.R. § 84.46

§ 84.46 Procurement records.

Currentness

Procurement records and files for purchases in excess of the small purchase threshold shall include the following at a minimum:

(a) Basis for contractor selection;

(b) Justification for lack of competition when competitive bids or offers are not obtained; and

(c) Basis for award cost or price.

SOURCE: 59 FR 47011, Sept. 13, 1994; 65 FR 30499, May 11, 2000, unless otherwise noted.

AUTHORITY: 42 U.S.C. 3535(d).

Current through January 16, 2014; 79 FR 3039

End of Document

© 2014 Thomson Reuters. No claim to original U.S. Government Works.

Code of Federal Regulations
Title 24. Housing and Urban Development
Subtitle A. Office of the Secretary, Department of Housing and Urban Development
Part 84. Uniform Administrative Requirements for Grants and Agreements with Institutions of Higher Education, Hospitals, and Other Non–Profit Organizations (Refs & Annos)
Subpart C. Post–Award Requirements
Procurement Standards

24 C.F.R. § 84.47

§ 84.47 Contract administration.

Currentness

A system for contract administration shall be maintained to ensure contractor conformance with the terms, conditions and specifications of the contract and to ensure adequate and timely follow up of all purchases. Recipients shall evaluate contractor performance and document, as appropriate, whether contractors have met the terms, conditions and specifications of the contract.

SOURCE: 59 FR 47011, Sept. 13, 1994; 65 FR 30499, May 11, 2000, unless otherwise noted.

AUTHORITY: 42 U.S.C. 3535(d).

Current through January 16, 2014; 79 FR 3039

End of Document

© 2014 Thomson Reuters. No claim to original U.S. Government Works.

Code of Federal Regulations
Title 24. Housing and Urban Development
Subtitle A. Office of the Secretary, Department of Housing and Urban Development
Part 84. Uniform Administrative Requirements for Grants and Agreements with Institutions of Higher Education, Hospitals, and Other Non–Profit Organizations (Refs & Annos)
Subpart C. Post–Award Requirements
Procurement Standards

24 C.F.R. § 84.48

§ 84.48 Contract provisions.

Currentness

The recipient shall include, in addition to provisions to define a sound and complete agreement, the following provisions in all contracts. The following provisions shall also be applied to subcontracts.

(a) Contracts in excess of the small purchase threshold shall contain contractual provisions or conditions that allow for administrative, contractual, or legal remedies in instances in which a contractor violates or breaches the contract terms, and provide for such remedial actions as may be appropriate.

(b) All contracts in excess of the small purchase threshold shall contain suitable provisions for termination by the recipient, including the manner by which termination shall be effected and the basis for settlement. In addition, such contracts shall describe conditions under which the contract may be terminated for default as well as conditions where the contract may be terminated because of circumstances beyond the control of the contractor.

(c) Except as otherwise required by statute, an award that requires the contracting (or subcontracting) for construction or facility improvements shall provide for the recipient to follow its own requirements relating to bid guarantees, performance bonds, and payment bonds unless the construction contract or subcontract exceeds $100,000. For those contracts or subcontracts exceeding $100,000, HUD may accept the bonding policy and requirements of the recipient, provided HUD has made a determination that the Federal Government's interest is adequately

WestlawNext © 2014 Thomson Reuters. No claim to original U.S. Government Works.

protected. If such a determination has not been made, the minimum requirements shall be as follows:

(1) A bid guarantee from each bidder equivalent to five percent of the bid price. The "bid guarantee" shall consist of a firm commitment such as a bid bond, certified check, or other negotiable instrument accompanying a bid as assurance that the bidder shall, upon acceptance of his bid, execute such contractual documents as may be required within the time specified.

(2) A performance bond on the part of the contractor for 100 percent of the contract price. A "performance bond" is one executed in connection with a contract to secure fulfillment of all the contractor's obligations under such contract.

(3) A payment bond on the part of the contractor for 100 percent of the contract price. A "payment bond" is one executed in connection with a contract to assure payment as required by statute of all persons supplying labor and material in the execution of the work provided for in the contract.

(4) Where bonds are required in the situations described herein, the bonds shall be obtained from companies holding certificates of authority as acceptable sureties pursuant to 31 CFR part 223, "Surety Companies Doing Business with the United States."

(d) All negotiated contracts (except those for less than the small purchase threshold) awarded by recipients shall include a provision to the effect that the recipient, HUD, the Comptroller General of the United States, or any of their duly authorized representatives, shall have access to any books, documents, papers and records of the contractor which are directly pertinent to a specific program for the purpose of making audits, examinations, excerpts and transcriptions.

(e) All contracts, including small purchases, awarded by recipients and their contractors shall contain the procurement provisions of Appendix A to this rule, as applicable.

SOURCE: 59 FR 47011, Sept. 13, 1994; 65 FR 30499, May 11, 2000, unless otherwise noted.

AUTHORITY: 42 U.S.C. 3535(d).

Current through January 16, 2014; 79 FR 3039

EXHIBIT "D"

List of Current WDC Projects

Waterbury Development Corporation
Current Programs/Projects

Programs/Grants (Project Manager)[1]

Community Development Block Grant (Diane Toolan)
Emergency Solutions Grant (Diane Toolan)
Neighborhood Stabilization Program (Diane Toolan)
Neighborhood Stabilization Program III (Diane Toolan)
HOME (Tina Lubus)
HUD – Neighborhood Initiative Grant (Diane Toolan)
HUD – Economic Development Initiative Grant (Diane Toolan)
DECD Brownfield Study Program (Todd Montello)
DECD Brownfield Municipal Pilot Program (Todd Montello)
EPA 2009 Assessment Grant (Todd Montello)
EPA 2010 Assessment Grant (Todd Montello)
EPA 2012 Assessment Grant (Todd Montello)
EPA Dual Action Grant (Andrew Martelli)

Projects (Project Manager)[1]

East End Public Facility Acquisition Project – Former Mattatuck Manufacturing Site (Andrew Martelli)
Cherry Street Industrial Park Remediation & Redevelopment Project (Todd Montello)
Waterbury Industrial Commons Remediation & Redevelopment Project (Andrew Martelli)
Municipal Stadium Project (Andrew Martelli)
UCONN Acquisition & Redevelopment (The Rectory) Project (Andrew Martelli)
MacDermid Property Acquisition/Public Works Facility Project (Todd Montello – Acquisition Phase/Andrew Martelli – Construction Phase)
Mill Street Abatement, Demolition, Remediation & Reuse Project (Andrew Martelli)
Meadow Street Abatement, Demolition & Reuse Project (Andrew Martelli)
Mad River Development Regional Brownfield Remediation & Reuse Project (Todd Montello)

[1]. The City will be notified immediately, in writing, of PM designation changes.

Place holder for the Curtin Park Renovation Project Authorization Letter between the City of Waterbury and the Waterbury Development Corporation. This Project Authorization Letter is an agenda item on the October 19, 2026 Board of Aldermen Meeting.

Attachment F

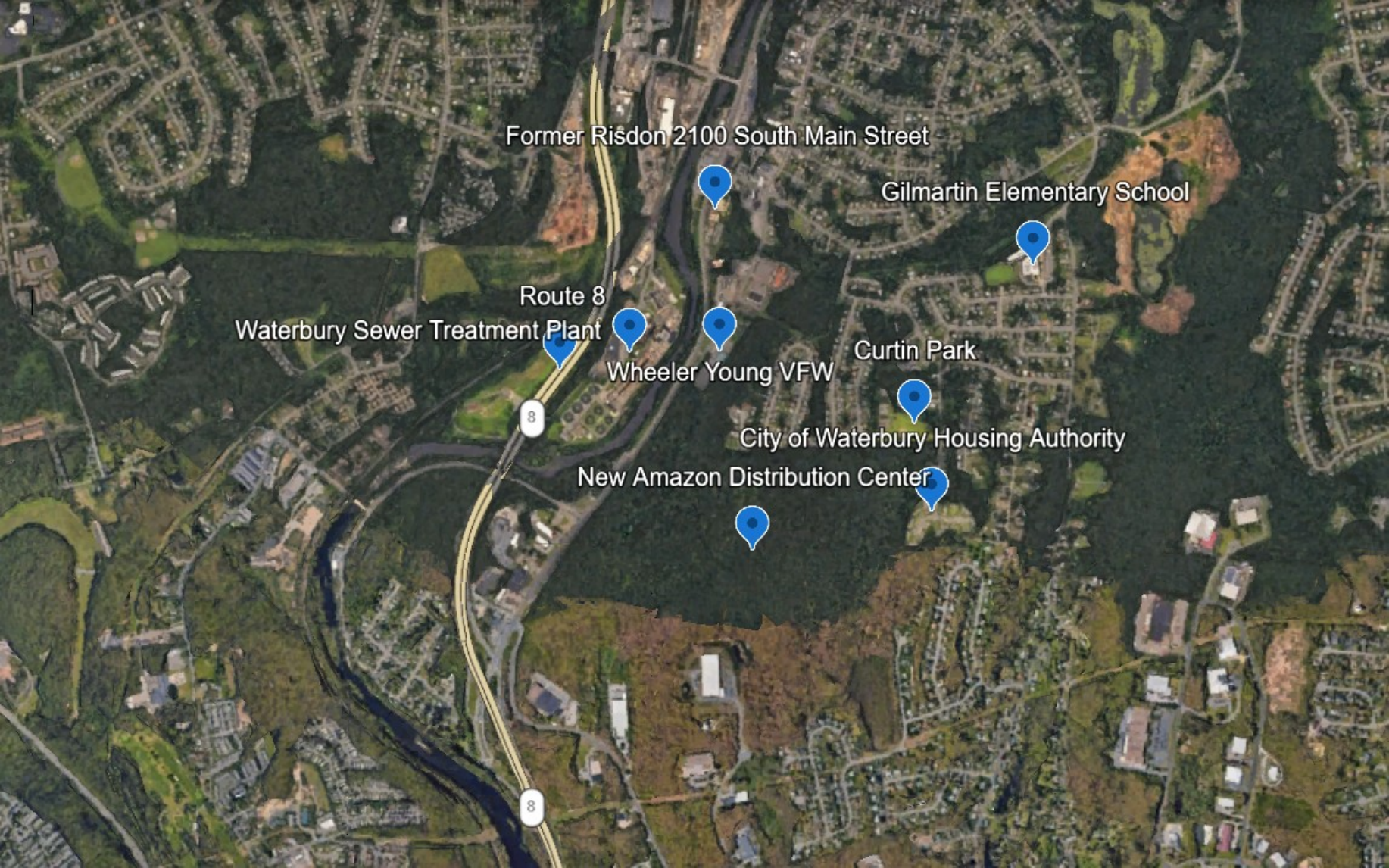
Former Risdon 2100 South Main Street
Gilmartin Elementary School
Route 8
Waterbury Sewer Treatment Plant
Wheeler Young VFW
Curtin Park
City of Waterbury Housing Authority
New Amazon Distribution Center
8
8

Attachment G

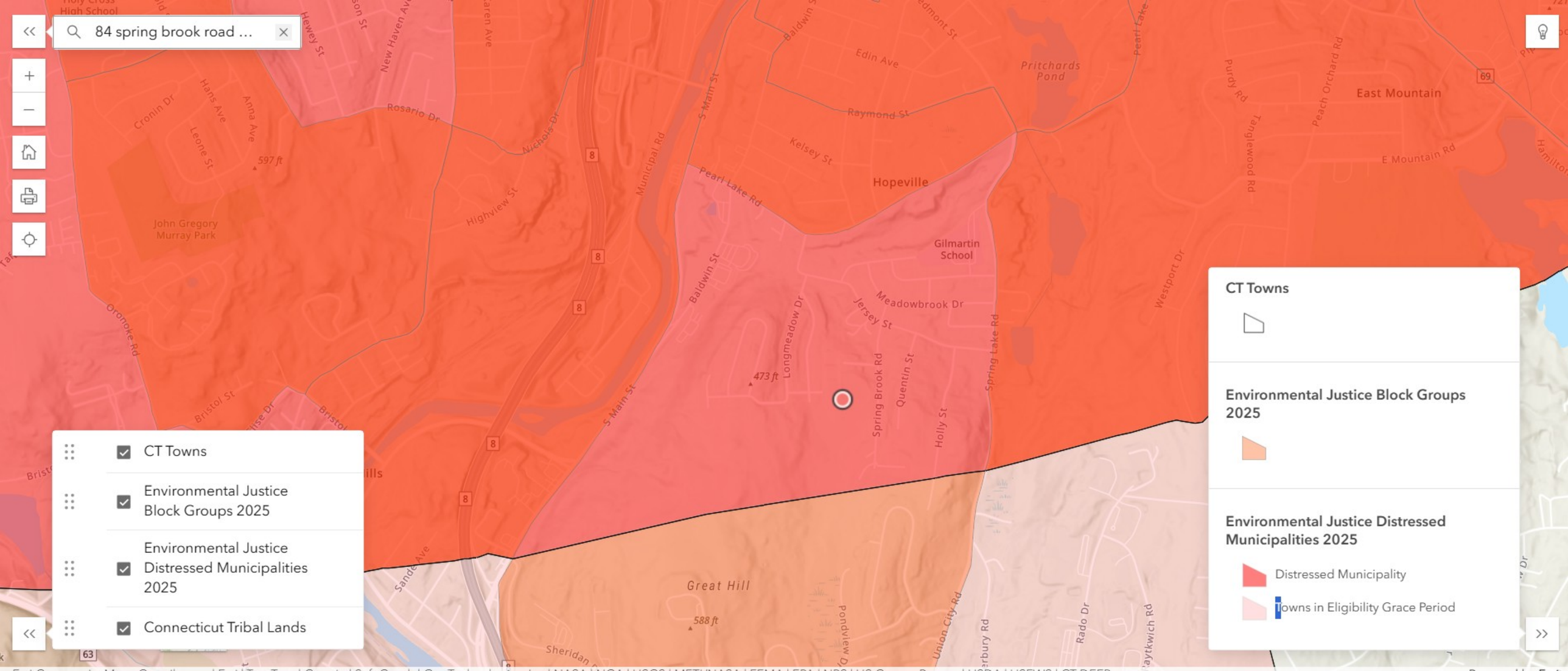
84 spring brook road ...
CT Towns
Environmental Justice Block Groups 2025
Environmental Justice Distressed Municipalities 2025
Connecticut Tribal Lands
CT Towns
Environmental Justice Block Groups 2025
Environmental Justice Distressed Municipalities 2025
Distressed Municipality
Towns in Eligibility Grace Period
Hopeville
East Mountain
Gilmartin School
Great Hill
Pritchards Pond
John Gregory Murray Park
Meadowbrook Dr
Spring Brook Rd
Longmeadow Dr
Quentin St
Holly St
Spring Lake Rd
Jersey St
Baldwin St
S Main St
Municipal Rd
Pearl Lake Rd
Raymond St
Kelsey St
Edin Ave
Rosario Dr
Highview St
Nichols Dr
Oronoke Rd
Bristol St
Sande Ave
Pondview Dr
Union City Rd
Rado Dr
Westport Dr
Purdy Rd
Peach Orchard Rd
Tanglewood Rd
E Mountain Rd
473 ft
597 ft
588 ft

Attachment H

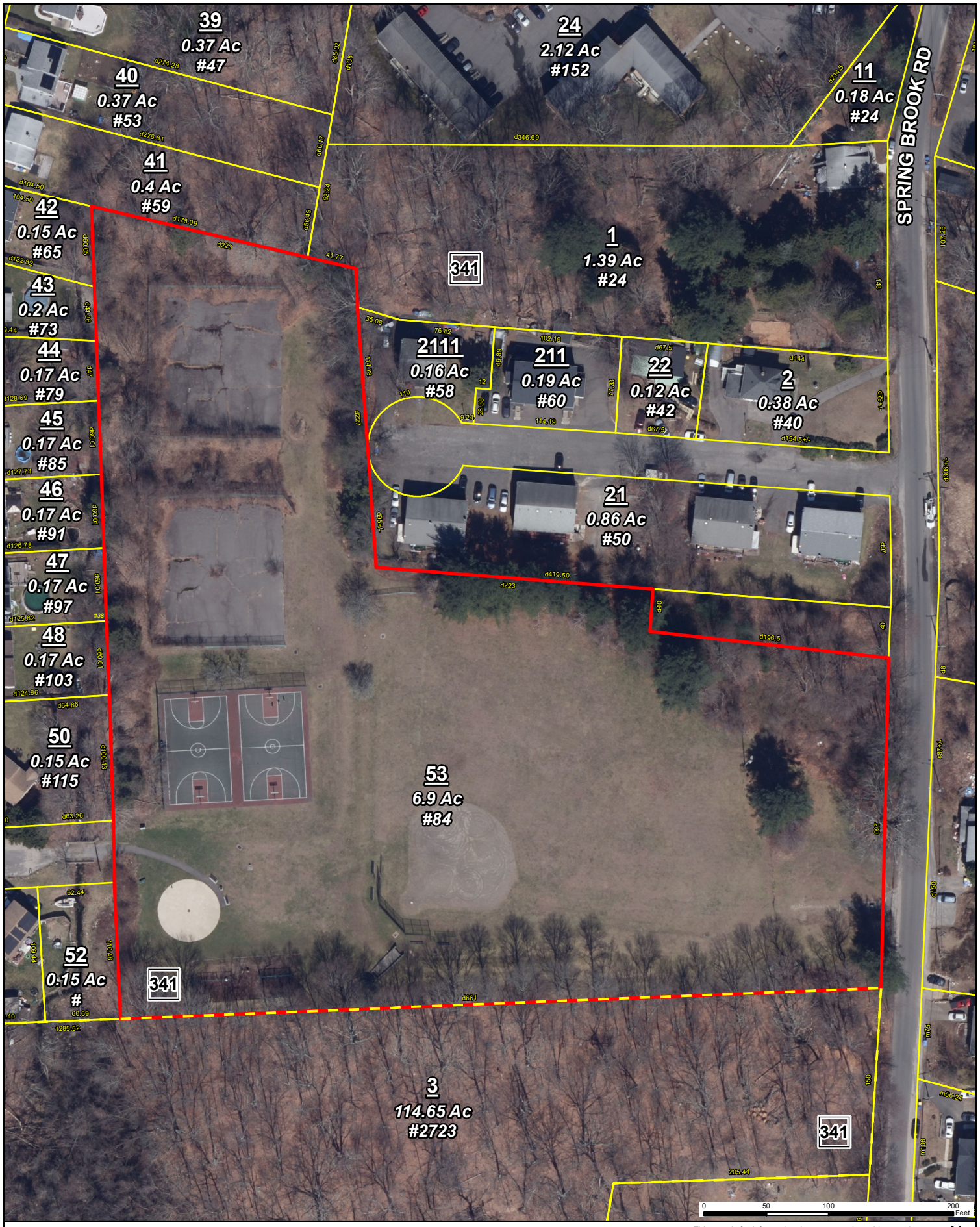

City of Waterbury
Public Works Department

MBL: **0549-0341-0053**

ADDRESS: 84 SPRING BROOK RD

This map is for informational purposes only and has not been prepared for, or suitable for legal, engineering, or surveying purposes. Users of this information should review or consult the primary data and information sources to verify the usability of the information. The City of Waterbury makes no warranties, express or implied, as to the use of the information obtained herein.

N

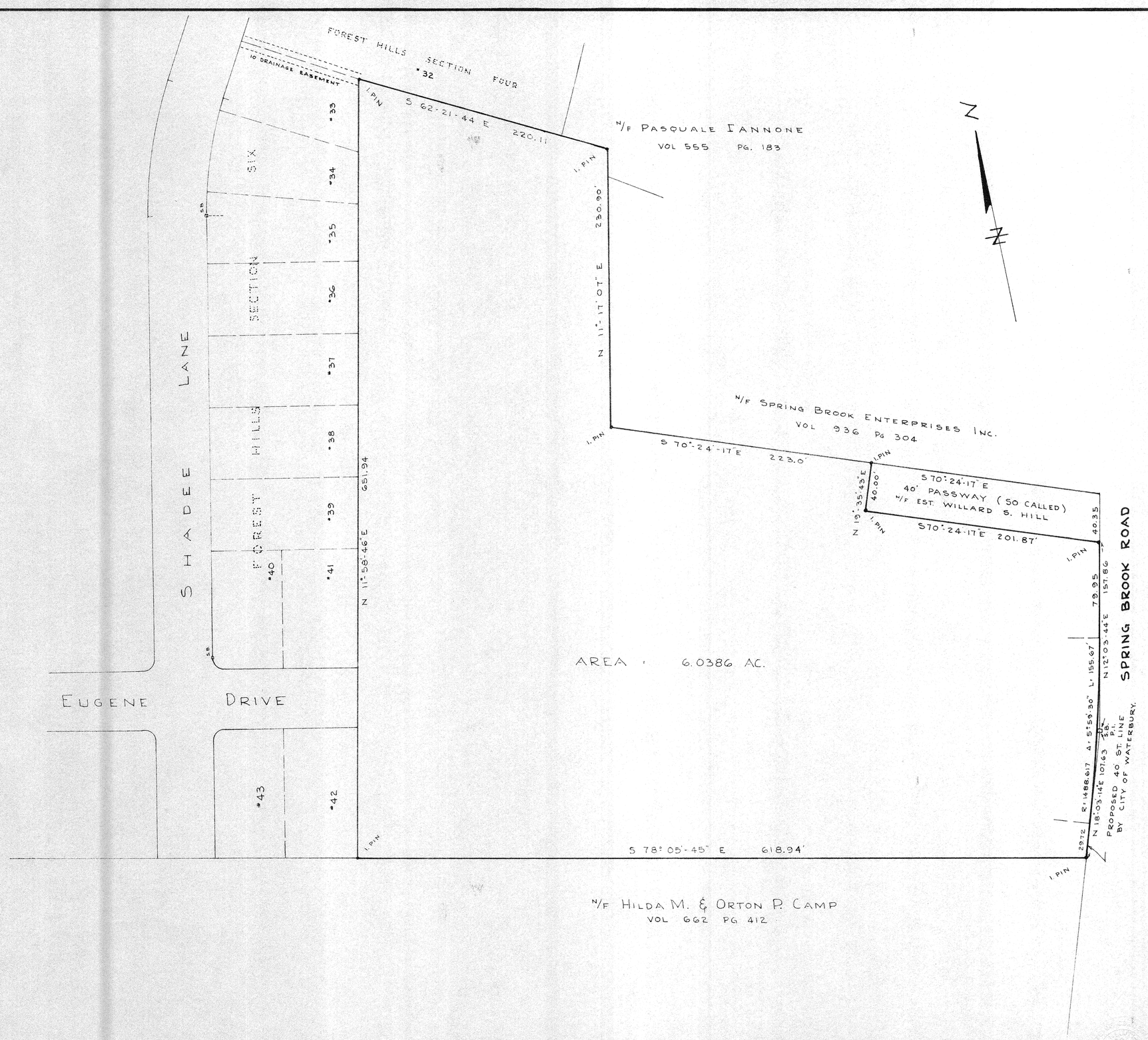

L. T. SCOTT-SMITH CO.
PROFESSIONAL ENGINEER & LAND SURVEYOR
WATERBURY, CONN.

SPRING BROOK ROAD TRACT
PROPERTY MAP
PREPARED FOR
THE CITY OF WATERBURY
PARK DEPARTMENT
WATERBURY, CONN.
1"=40 MAR. 1973 K15-5

I HEREBY CERTIFY THAT THIS MAP IS SUBSTANTIALLY CORRECT AND IN CONFORMANCE WITH CLASS A-2 CODE OF CONNECTICUT TECHNICAL COUNCIL, INC.

Keith T. Scott-Smith
REGISTERED LAND SURVEYOR

24-4-7 Acc. ~~23853~~ 22353

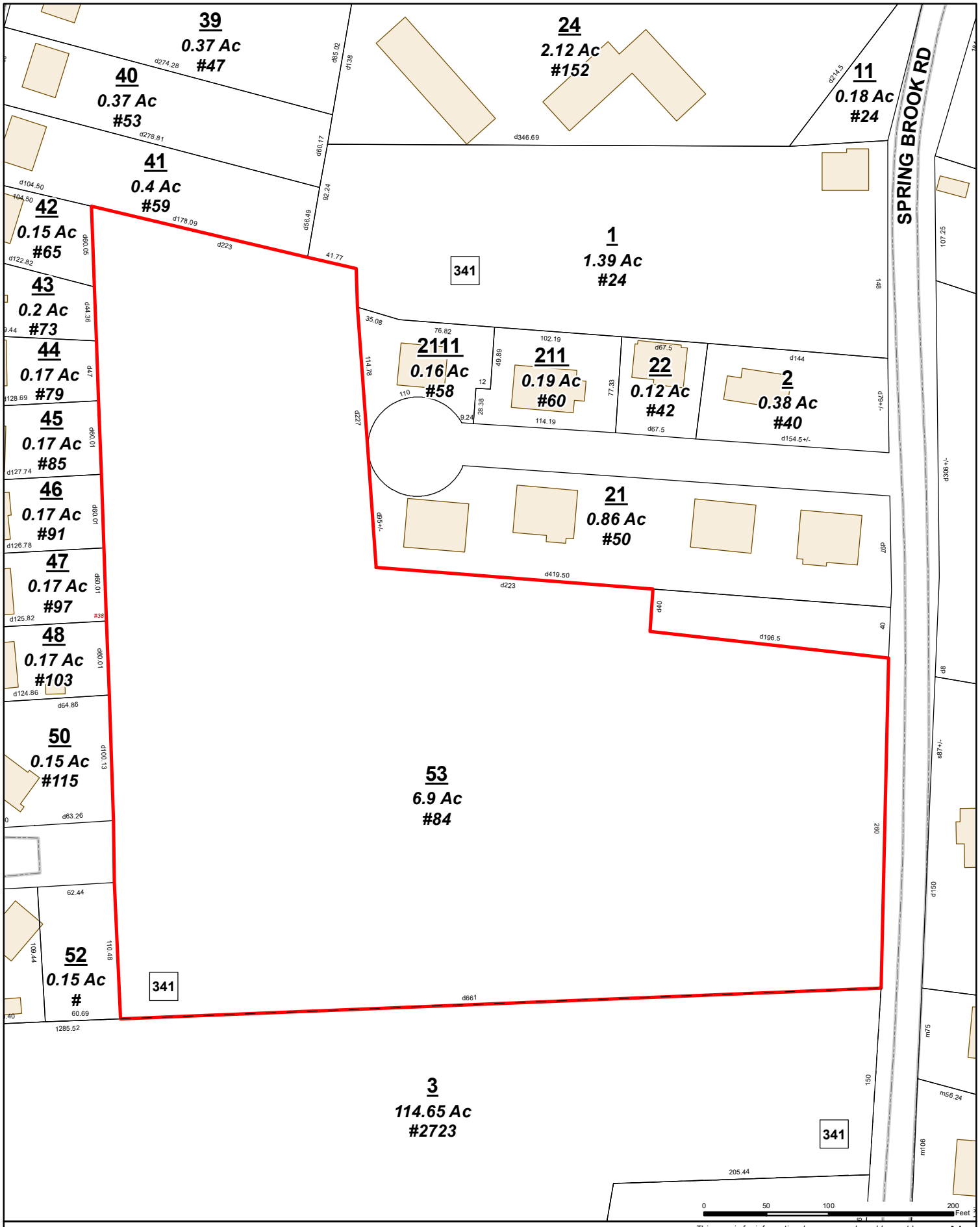

City of Waterbury
Public Works Department

MBL: **0549-0341-0053**

ADDRESS: 84 SPRING BROOK RD

This map is for informational purposes only and has not been prepared for, or suitable for legal, engineering, or surveying purposes. Users of this information should review or consult the primary data and information sources to verify the usability of the information. The City of Waterbury makes no warranties, express or implied, as to the use of the information obtained herein.

N

Attachment I

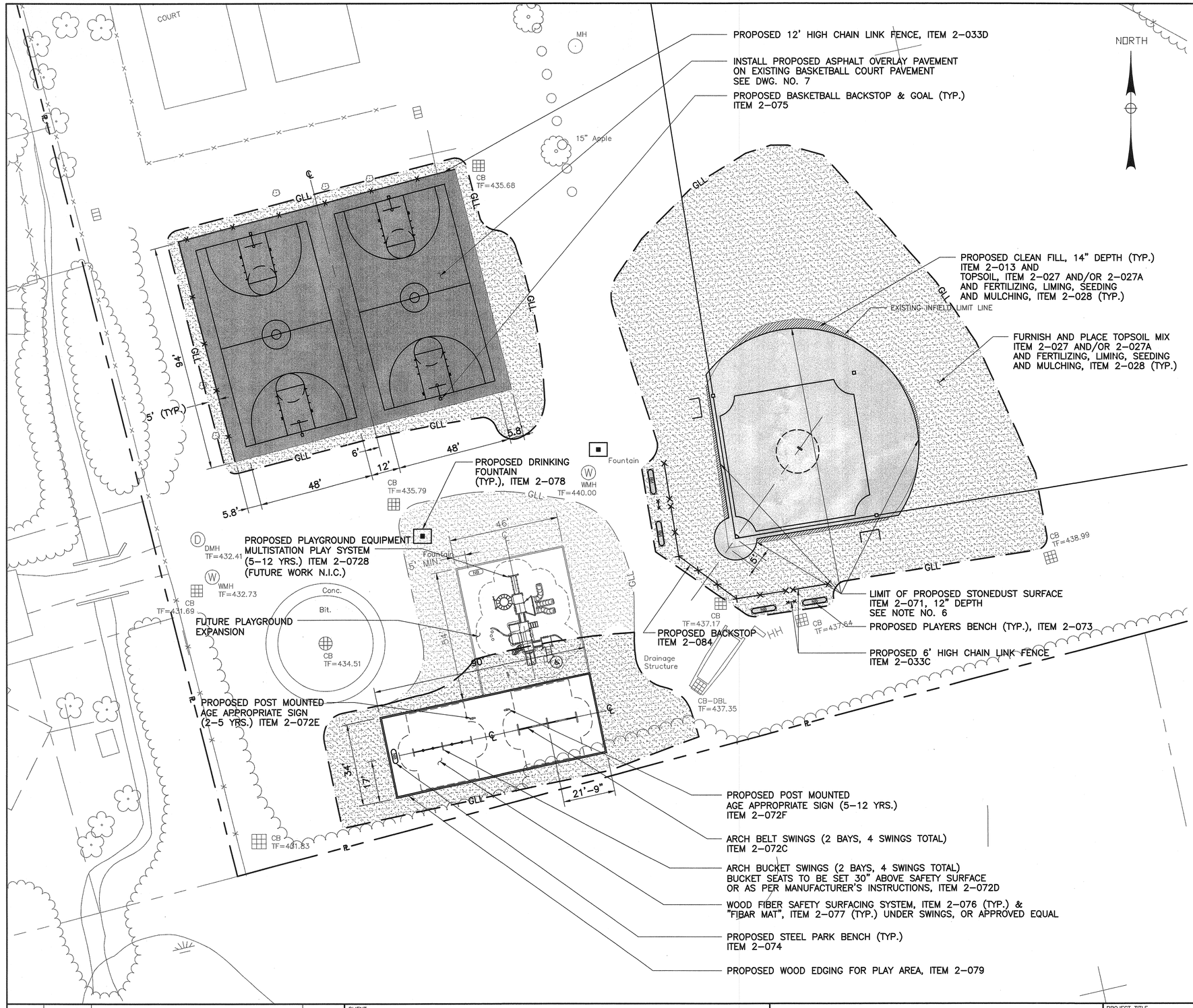

LAYOUT NOTES:

1. CONTRACTOR SHALL EXERCISE CARE WHEN PERFORMING ANY WORK ACTIVITIES ADJACENT TO SITE FEATURES TO REMAIN. CONTRACTOR SHALL BE RESPONSIBLE FOR TAKING THE APPROPRIATE MEASURES AS NECESSARY TO ENSURE AND PROVIDE A SAFE WORK AREA.
2. THE CONTRACTOR SHALL STAKE OUT LOCATIONS OF NEW BENCHES AND PLAYGROUND EQUIPMENT FOR LAYOUT APPROVAL PRIOR TO THE START OF CONSTRUCTION. ALL LAYOUTS SHOULD BE PERFORMED BY A CONNECTICUT STATE LICENSED LAND SURVEYOR.
3. EXPOSED FOOTINGS SHALL HAVE A NYLON BRUSH FINISH.
4. THE CONTRACTOR SHALL RESTORE ALL AREAS SURROUNDING THE NEW WORK DAMAGED BY THE CONTRACTOR DURING CONSTRUCTION AFTER ALL WORK IS COMPLETED TO THE SATISFACTION AND APPROVAL OF THE CITY.
5. CONTRACTOR SHALL INSTALL MIN. 12" DEPTH OF PROPOSED FIBER SAFETY SURFACING SYSTEM WITHIN PROPOSED ACTIVITY ZONES.
6. CONTRACTOR SHALL FURNISH AND INSTALL CLEAN FILL MATERIAL, ITEM 2-013, AS NECESSARY TO ESTABLISH INFIELD SUBGRADE PRIOR TO STONEDUST SURFACE INSTALLATION.
7. CONTRACTOR SHALL FURNISH AND INSTALL CLEAN FILL MATERIAL, ITEM 2-013, IF REQUIRED TO ESTABLISH FINISHED SUBGRADE ELEVATIONS AS INDICATED ON THE PLANS.

LEGEND:

- EXISTING PROPERTY LINE
- EXISTING CURB
- EXISTING FENCE
- EXISTING METAL BENCH
- 9" EXISTING TREE
- EXISTING SHRUB
- PROPOSED ASPHALT PAVEMENT FOR BASKETBALL COURT
- PROPOSED TOPSOIL & SEED LIMIT
- PROPOSED STEEL PARK BENCH
- PROPOSED BASKETBALL BACKSTOP
- GLL — PROPOSED GRADING LIMIT LINE
- PROPOSED PLAYERS BENCH
- PROPOSED DRINKING FOUNTAIN
- LIMIT OF PROPOSED WOOD FIBER SAFETY SURFACING SYSTEM (ACTIVITY ZONE)
- PROPOSED WOOD EDGING
- CENTERLINE
- PROPOSED CLEAN FILL, TOPSOIL, FERTILIZING, LIMING, SEEDING AND MULCHING
- PROPOSED STONEDUST SURFACE

TOPOGRAPHIC SURVEY PREPARED BY BSC GROUP, 180 GLASTONBURY BOULEVARD, GLASTONBURY, CT. JANUARY 2007

REV.	DATE	REMARKS	BY

CLIENT

CITY OF WATERBURY
PUBLIC WORKS DEPARTMENT
WATERBURY, CONNECTICUT

LKB
LOCKWOOD, KESSLER & BARTLETT, INC.
CONSULTING ENGINEERS SINCE 1889 SYOSSET, NEW YORK

PROJECT TITLE
PARK IMPROVEMENTS AT SLOPING ACRES PARK & CURTIN PARK

DRAWING TITLE
CURTIN PARK
LAYOUT AND MATERIALS PLAN

DESIGNED BY:	F.E.
DRAWN BY:	WST
CHECKED BY:	S.F.
DATE:	OCTOBER 2007
SCALE:	1"=20'
PROJECT NO.	6259
DRAWING NO.	5



GRADING & DRAINAGE NOTES:

1. THE CONTRACTOR SHALL VERIFY THE FINAL PROPOSED GRADES PRIOR TO CONSTRUCTION.
2. ALL PROPOSED SPOT ELEVATIONS SHALL BE ESTABLISHED BY A CONNECTICUT STATE LICENSED SURVEYOR.
3. CONTRACTOR SHALL FINE GRADE DISTURBED SUBRADE AS REQUIRED UNDER ITEM 2–008.
4. CONTRACTOR SHALL GRADE SITE TO MEET PROPOSED GRADES AND/OR DISPOSE OF SURPLUS MATERIAL AS SPECIFIED UNDER ITEM 2–003.
5. CONTRACTOR SHALL FINISH AND PLACE CLEAN FILL AS REQUIRED TO MEET PROPOSED GRADES WHEN NECESSARY, AS SPECIFIED UNDER ITEM 2–013.

LEGEND:

- EXISTING PROPERTY LINE
- EXISTING FENCE
- PROPOSED FENCE
- EXISTING SHRUB
- EXISTING TREE
- EXISTING CONTOUR
- PROPOSED GRADING LIMIT LINE
- PROPOSED CONTOUR
- EXISTING SPOT GRADE
- PROPOSED SPOT GRADE
- PROPOSED STEEL PARK BENCH
- PROPOSED PLAYERS BENCH
- PROPOSED DRINKING FOUNTAIN
- PROPOSED AGE APPROPRIATE SIGN
- PROPOSED BASKETBALL BACKSTOP
- PROPOSED SWALE

TOPOGRAPHIC SURVEY PREPARED BY BSC GROUP, 180 GLASTONBURY BOULEVARD, GLASTONBURY, CT. JANUARY 2007

REV.	DATE	REMARKS	BY

CLIENT

CITY OF WATERBURY
PUBLIC WORKS DEPARTMENT
WATERBURY, CONNECTICUT

LKB
LOCKWOOD, KESSLER & BARTLETT, INC.
CONSULTING ENGINEERS SINCE 1889 SYOSSET, NEW YORK

PROJECT TITLE
PARK IMPROVEMENTS AT SLOPING ACRES PARK & CURTIN PARK

DRAWING TITLE
CURTIN PARK
GRADING AND DRAINAGE PLAN

DESIGNED BY:	F.E.
DRAWN BY:	WST
CHECKED BY:	S.F.
DATE:	OCTOBER 2007
SCALE:	1"=20'
PROJECT NO.	6259
DRAWING NO.	6

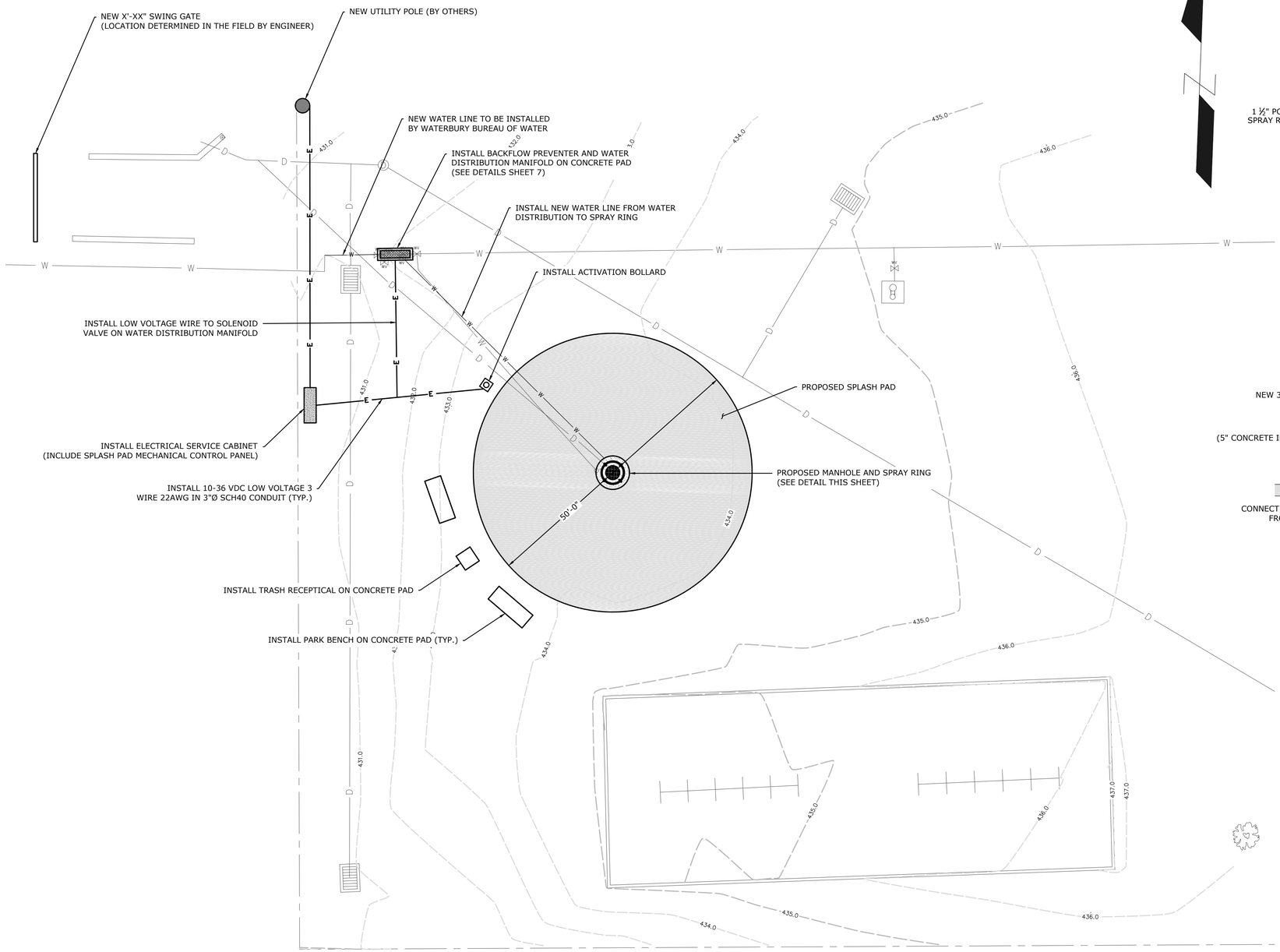

CURTIN PARK PROPOSED PLANS
SCALE : 1" = 10'-0"

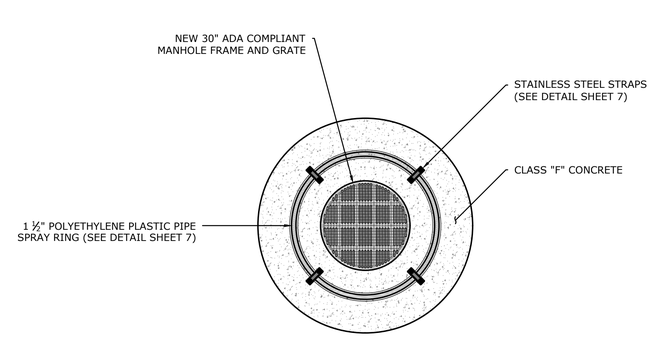

MANHOLE, SPRAY RING AND DRAIN

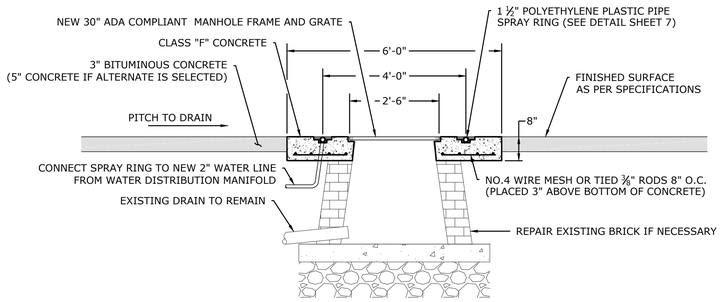

SPRAY PAD CENTER CROSS SECTION

CURTIN PARK PROPOSED DETAILS
NOT TO SCALE

PROPOSED SITE PLAN

CURTIN PARK
SPLASH PAD
84 SPRING BROOK ROAD

Bureau of Engineering
City of Waterbury, CT.

DESIGNED BY: TC	DATE: FEBRUARY 2018	Sheet No. **2**
DRAWN BY: MC/VT	SCALE: SCALE AS NOTED	
CHECKED BY: TC	ISSUED FOR: CONSTRUCTION	
APPROVED BY: TC	CADD FILE: P081 CURTIN PARK SPLAH PAD	

C:\Users\mcaffrey\appdata\local\temp\AcPublish_64916\2018 CDBG Park Splash Pads.dwg
Plotted: Mar 22, 2018 – 8:27 am

Attachment J

Figure 6-4: Parks, Recreation, and Open Space

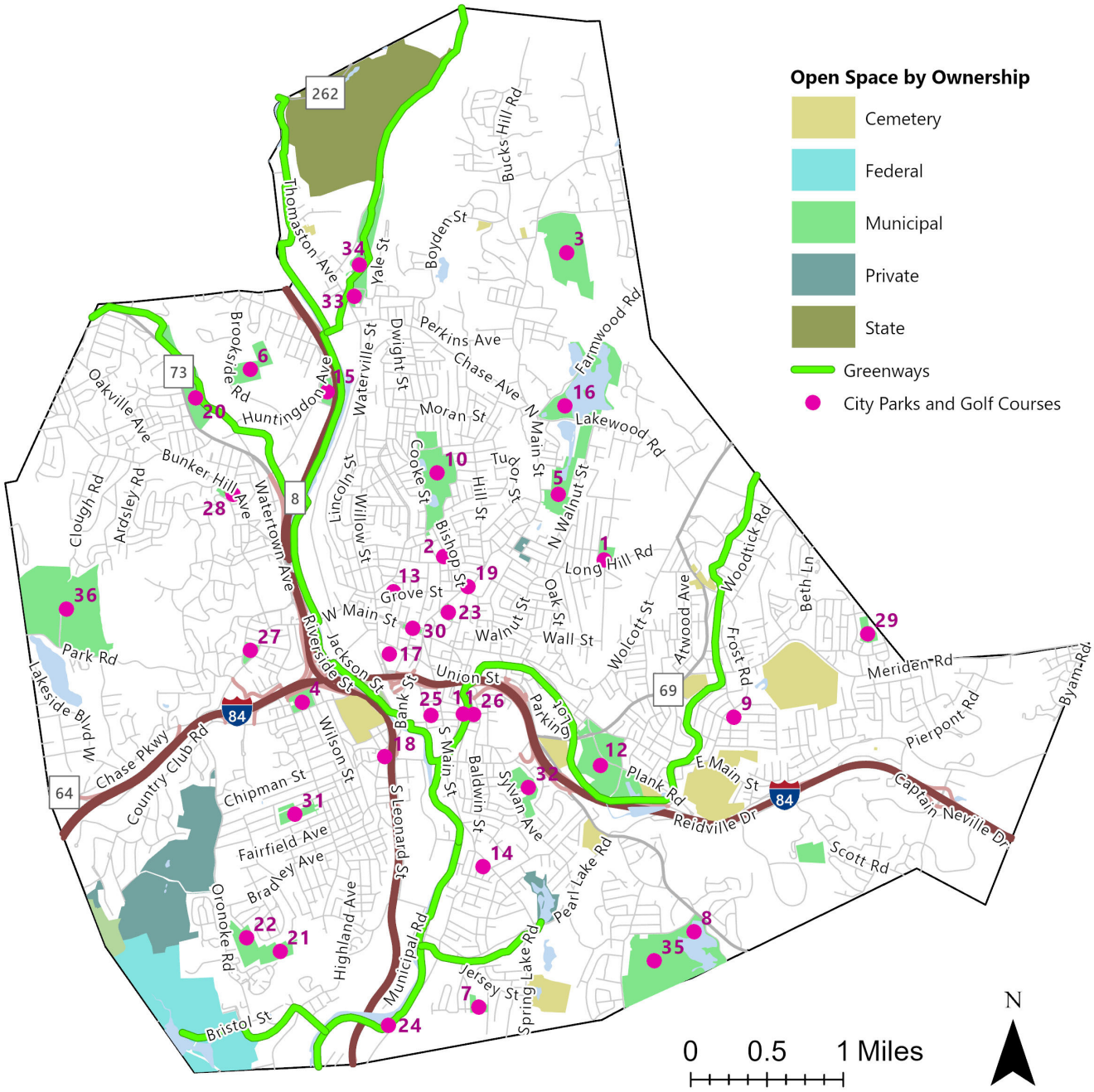

Map Key	Name	Map Key	Name	Map Key	Name
1	Berkeley Park	13	Hayden Park	25	Rivera-Hughes Park
2	Bonner Park	14	Hopeville Park	26	River-Baldwin Rec Center
3	Bucks Hill Park	15	Huntingdon Park	27	Rowland Park
4	Chase Park	16	Lakewood Park	28	Schofield Park
5	City Mills Park	17	Library Park	29	Sloping Acres Park
6	Coe Park	18	Lt. Riddick Park	30	The Green
7	Curtin Park	19	MLK Park	31	Town Plot Park
8	East Mountain Park	20	Municipal Stadium	32	Washington Park
9	Fairlawn Park	21	Murray Park (Lower)	33	Waterville Park
10	Fulton Park	22	Murray Park (Upper)	34	Waterville Park (Back Fields)
11	George S. Tirado Sr. Park	23	North End Rec. Center	35	East Mountain Golf Course
12	Hamilton Park	24	Platt Park	36	Western Hills Golf Course

Attachment K

Waterbury

Unique ID: 054903410053 **Card No:** 1 Of 1

Location:	84 SPRING BROOK RD	Map Id:	0549-0341-0053	Zone:	RL	Date Printed:	7/31/2026
		Neighborhood:	22300-Hopeville			Last Update:	7/30/2026

Owner Of Record	Volume/Page	Date	Sales Type	Valid	Sale Price
CITY OF WATERBURY	1082/ 254				
			Exempt		

Prior Owner History

Permit Number	Date	Permit Description
2018.2698	9/25/2018	INSTALL NEW 100A UNDERGROUND SERVICE & BONDING OF EXISTING SPLASH PAD - REMODELED ONE NOZZLE ONE BAL

Supplemental Data

Census/Tract	
Dev Map ID	
GIS ID	
Route	
District	
Utilities	

Appraised Value

Total Land Value	134,000
Total Building Value	0
Total Outbldg Value	54,600
Total Market Value	188,600

Acres

Land Type	Acres	490	Total Value
Rear	6.76	0.00	109,500
HouseLot	0.14	0.00	24,500
Total	6.9000	0.00	134,000

State Item Codes

Code	Quantity	Value
12-Res Excess	6.76	76.650
14-Res Outbuilding	6.00	38,220
11-Res Land	0.14	17.150

Assessment History (Prior Years as of Oct 1)

	2026	2025	2024	2023	2022
Land	93,800	93,800	93,800	93,800	93,800
Building	0	0	0	0	0
Outbuilding	38,220	38,220	38,220	38,220	38,220
Total	132,020	132,020	132,020	132,020	132,020

490 Appraised Totals

Type	Acres	Value	Type	Acres	Value
			Totals	0.00	0

Application Date: Expiration Date:

Comments

Information may be deemed reliable, but not guaranteed.

Revaluation Date: 10/1/2022

Unique ID: 054903410053 Waterbury **Card No:** 1 Of 1

Location:	84 SPRING BROOK RD
Map Id:	0549-0341-0053

General Description

Building Use
Units
Overall Condition
Class
Stories
Design (Style)
Construction
Year Built
Percent Complete

Finished Area

Foundation

Basement Area
Finished Basement
Garage Bays
Outside Entry
Sump Pump

HVAC

Heating Type
Fuel
Cooling Type

Interior

Floors
Attic Access
Walls
Bath Cond
Kitchen Cond

Exterior

Exterior

Roof Cover
Roof Type

Special Features

Type	Count/Area

Room Summary

Total	Bedroom	Kitchens	Full Baths	Half Baths

Description	Area/Qty

Attached Components

Type	Year	Area

Total Building Value:

Detached Component Computations

Type	Year	Condition	Area/Qty
Chain Link Fencing	1974	Average	2440
Chain Link Fencing	1974	Average	420
Chain Link Fencing	1974	Average	40
Chain Link Fencing	1974	Average	40
Low QualityPatio	1974	Average	11000
Tennis Courts	1974	Average	12000

Type	Year	Condition	Area/Qty

WARRANTEE DEED No. 116 Cleaveland Legal Blank Service, Inc. Hartford, Connecticut

To all People to whom these Presents shall come, Greeting:

KNOW YE, THAT it, THE HARTFORD ROMAN CATHOLIC DIOCESAN CORPORATION, a Connecticut non-stock corporation of Hartford, Connecticut

for the consideration of FIFTY SEVEN THOUSAND THREE HUNDRED TWENTY-SIX DOLLARS AND 30/100 ($57,326.30)

received to its full satisfaction of THE CITY OF WATERBURY, a Connecticut municipal corporation

do give, grant, bargain, sell and confirm unto the said The City of Waterbury all that certain piece or parcel of land, with all the improvements thereon, situated in the Hopeville District, so-called, in the said Town of Waterbury, bounded and described as follows:

Beginning at the Southeast corner of land formerly of Edward Larrow, at a point forty (40) feet south from said corner; thence running West in a line parallel with, and forty (40) feet distant therefrom, said Larrows South Line one hundred and ninety-six and one-half (196-1/2) feet, more or less; thence North forty (40) feet, more or less; thence West two hundred and twenty-three (223) feet, more or less; thence North two hundred and twenty-seven (227) feet, more or less; thence West two hundred and twenty-three (223) feet, more or less; thence South five hundred and ninety-four (594) feet, more or less; thence East six hundred and sixty-one (661) feet, more or less; thence North two hundred and twenty-seven (227) feet, more or less, to place of beginning, bounded:

Northerly -	on land now or formerly of Est. Willard S. Hill (a proposed passway);
Easterly -	on Spring Brook Road;
Southerly -	on land now or formerly of Orton P. Camp;
Westerly -	on land now or formerly of Fabiani and Pesce, and on Eugene Drive, so-called; again
Northerly -	on land now or formerly of Salvatore James Melchiore, and on land now or formerly of Pasquale Iannone; again
Easterly -	on land now or formerly of Pasquale Iannone, and on land now or formerly of Carmela P. Amico; again
Northerly -	on land now or formerly of Carmela P. Amico; again
Easterly -	on land now or formerly of Est. Willard S. Hill (a proposed passway),

being the same premises conveyed to the grantor by Warranty Deed of Concettina Garofalo dated July 13, 1961 and recorded in the office of the Town Clerk of Waterbury in Vol. 813 at Page 64.

Said premises are conveyed subject to building, building line and zoning restrictions as of record appear.

To Have and to Hold the above granted and bargained premises, with the appurtenances thereof, unto it the said grantee its ~~heirs,~~ successors, and assigns forever, to it and their own proper use and behoof. And also, it the said grantor does for it ~~self~~, its ~~heirs,~~ executors, administrators, and successors, covenant with the said grantee, its ~~heirs,~~ successors, and assigns, that at and until the ensealing of these presents, it is well seized of the premises, as a good indefeasible estate in *Fee Simple;* and has good right to bargain and sell the same in manner and ~~form~~ as is above written and that the same is free from all incumbrances whatsoever, except as hereinbefore mentioned.

And Furthermore, it the said grantor does by these presents bind it self and its ~~heirs~~ successors forever to *Warrant and Defend* the above granted and bargained premises to it the said grantee, its ~~heirs,~~ successors, and assigns, against all claims and demands whatsoever, except as hereinbefore mentioned.

In Witness Whereof, The Hartford Roman Catholic Diocesan Corporation has caused this instrument to be executed in its name and its corporate seal affixed hereto

~~In xxxx

Attachment N

MICHAEL J. DALTON
CITY CLERK

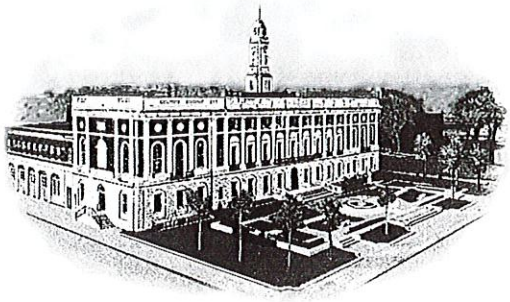

Office: (203) 574-6744
Fax: (203) 574-6745
E-mail: mdalton@waterburyct.org

OFFICE OF CITY CLERK
THE CITY OF WATERBURY
CONNECTICUT

October 7, 2026

Dr. James Nardozzi
83 Bank Street, 3rd Floor
Waterbury, CT 06702

RE: Letter of Support – Curtin Park Grant Application

Dear Dr. Nardozzi:

At its regular meeting held on Tuesday, October 6, 2026, the Board of Park Commissioners voted unanimously to express its support for the submission of a grant application for the proposed renovation and improvement of Curtin Park.

The Board recognizes the importance of maintaining and enhancing the City's parks and recreational facilities and believes that the proposed improvements to Curtin Park will provide meaningful benefits to the community and enhance the park for residents and visitors.

Accordingly, the Board of Park Commissioners is pleased to provide its full support for the grant application and the proposed renovation and improvement of Curtin Park.

Sincerely,

THE CITY OF WATERBURY

ATTEST: _____
Michael J. Dalton
City Clerk

MJD: dd

Item #1

ROBERT J. NERNEY, AICP
CITY PLANNER

One Jefferson Square Building
185 South Main Street • 5th Floor
Waterbury, CT 06706
Office: (203) 574-6817
Fax: (203) 346-3949
Email: rnerney@waterburyct.org

PAUL K. PERNEREWSKI, JR.
MAYOR

CITY PLANNING DEPARTMENT
THE CITY OF WATERBURY
CONNECTICUT

Dr. Cameron Clegg
Environmental Analyst 2/UGCG Lead
Land Acquisition and Management
Office of the Commissioner
CT Department of Energy and Environmental Protection
79 Elm Street
Hartford, CT 06106

October 1, 2026

Dear Dr. Clegg,

This letter is written in support of the City of Waterbury's initiative to secure an Urban Green and Community Garden (UGCG) grant through the Connecticut Department of Energy and Environmental Protection. If approved, the grant will be used to renovate Curtin Park; a recreation area that serves the City's Gilmartin neighborhood. Curtin Park is located in a residential neighborhood at 84 Springbrook Road, just 0.3 miles from a Waterbury Housing Authority 56-unit housing complex also located on 167 Springbrook Road.

Anticipated improvements include the removal of overgrown vegetation, installation of walkways, benches, and trash receptables. The tennis courts currently have trees growing through the asphalt surfaces, the basketball courts need to be resurfaced, the baseball field needs to be renovated, as well as, the playground area. The tennis courts would be removed and replaced with a grass field. The swings and surfacing at the playground will be replaced. In addition, there is currently a growing interest in soccer and therefore we will be incorporating soccer goals at the baseball field.

Waterbury's Plan of Conservation and Development (POCD) strongly supports projects of this nature. As a long-range planning tool, the POCD emphasizes the importance of maintaining and rehabilitating parks and open space (refer to POCD attachment, page 53). The rehabilitation and maintenance of existing parks, parklets, playgrounds, golf courses and recreation centers are identified as an immediate need in terms of priority implementation (refer to POCD attachment, page 53).

The City of Waterbury appreciates your consideration of this request. Please do not hesitate to contact me should you have any questions or would additional information.

Respectfully,

Robert J. Nerney, AICP
City Planner

cc. Zach Keith, Urban Historian, Economic Development & Grant Manager, WDC
Brenda Richard, Administrative Assistant, WDC

PAUL K. PERNEREWSKI, JR.
MAYOR

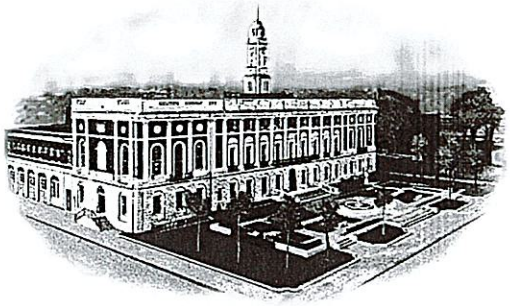

OFFICE OF THE MAYOR
THE CITY OF WATERBURY
CONNECTICUT

Dr. Cameron Clegg
Environmental Analyst 2/UGCG Lead
Land Acquisition and Management
Office of the Commissioner
CT Department of Energy and Environmental Protection
79 Elm Street
Hartford, CT 06106

October 8, 2026

Dear Dr. Clegg,

I am writing to you as Mayor of the City of Waterbury in support of the city's Urban Green and Community Garden Grant Application for the **Curtin Park Renovation Project.**

The City of Waterbury purchased the property in 1973 and subsequently constructed the park in 1974, naming it in honor of long time Parks Department Superintendent James Curtin. The park was originally designed with a baseball field that could be flooded for skating, basketball courts, tennis courts, and a playground.

The park, however, is in great need for improvements.

Curtin Park, is located in a residential neighborhood on Springbrook Road, just 0.3 miles from a Waterbury Housing Authority multi-family housing complex also located on Springbrook Road. The park's southern boundary is at the edge of the new 3.2 million square foot Amazon distribution center scheduled for completion summer 2027 and projected to employ 1,000 workers. Lastly, the park is a half-mile walk from one of Waterbury's newer public schools: the K-8 John G. Gilmartin School built in 2010.

The Park is located within census tract 3515. Waterbury's median household income is $51,886, which is far below the State of Connecticut's at $99,900.

The Park has overgrown trees and vegetation throughout which does not provide a welcoming entrance. The park's most recent improvement was a splash pad in constructed in 2018. The balance of the park has not seen investment in many years. The tennis courts currently have trees growing through the asphalt surfaces, the basketball courts need to be resurfaced, the baseball field needs to be renovated, as well as, the playground area.

Through pruning and removal of overgrown vegetation the park will become more welcoming and provide an additional amenity with the addition of a walking path around the park. The tennis courts would be removed and replaced with a grass field. The swings and surfacing at the playground will be replaced.

In addition, there is currently a growing interest in soccer and therefore we will be incorporating soccer goals at the baseball field. The limited lighting and park signage at both entrances to the park will be replaced. Trash cans and benches will also be added back to the park as currently there are none.

By investing in a renovation to this park which is within walking distance to the school and a troubled neighborhood this will help rejuvenate the neighborhood. With the lights not in working order and the overgrown vegetation making for a current safety hazard.

I overwhelmingly support the city's UGCG Application and look forward to seeing this project come to life.

Sincerely,

Paul K. Pernerewski, Jr.
Mayor, City of Waterbury

Attachment O&P

Dr. Cameron Clegg
Environmental Analyst 2/UGCG Lead
Land Acquisition and Management
Office of the Commissioner
CT Department of Energy and Environmental Protection
79 Elm Street
Hartford, CT 06106

September 30, 2026

Dear Dr. Clegg,

I am writing to you as President of the Gilmartin Community Club in support of the City's Urban Green and Community Garden Grant Application for the Curtin Park Renovation Project.

Curtin Park has been a part of this neighborhood since being constructed the park in 1974, naming it in honor of long time Parks Department Superintendent James Curtin. The park was originally designed with a baseball field that could be flooded for skating, basketball courts, tennis courts, and a playground.

The park, however, is in great need for improvement.

Curtin Park, 84 Springbrook Road, is located in the Gilmartin neighborhood section of Waterbury, just 0.3 miles from the Waterbury Housing Authority 56-unit housing complex also located on 167 Springbrook Road. The park's southern boundary is at the edge of the new 3.2 million square foot Amazon distribution center scheduled for completion summer 2027 and projected to employ 1,000 workers. Lastly, the park is a half mile walk from one of Waterbury's newer public schools: the K-8 John G. Gilmartin School built in 2010.

The Park is located within census tract 3515. Waterbury's median household income is $51,886, which is far below the State of Connecticut's at $99,900.

The Park has overgrown trees and vegetation throughout which does not provide a welcoming entrance. The park's most recent improvement was a splash pad in constructed in 2018. The balance of the park has not seen investment in many years. The tennis courts currently have trees growing through the asphalt surfaces, the basketball courts need to be resurfaced, the baseball field needs to be renovated, as well as the playground area. There is also currently no soccer field which the neighbors would greatly support.

By investing in a renovation to this park which is within walking distance to the school and our Gilmartin neighborhood this will help improve the quality of life for the residents with an improved park in walking distance from their house. The Gilmartin community is in favor of rehabbing Curtin Park and supports the proposed improvements.

I overwhelmingly support the City's UGCG Application and look forward to seeing this project come to life.
Sincerely,

Gary M Giusto

Gary M Giusto

President Gilmartin Community Club

HOUSING AUTHORITY
OF THE CITY OF WATERBURY

2 Lakewood Road Waterbury, CT 06704 Phone: 203-596-2640

CHRISTIAN D'ORSO
Executive Director

VINCENT SICA
Deputy Director

BOARD OF COMMISSIONERS
Nicholas Tetreault, Chairman
Dr. Robert Porzio, Vice Chairman
Joseph Thomas, Treasurer
Tahra Sanchez, Commissioner
Alice Trotman, Resident Commissioner

September 30, 2026

Dr. Cameron Clegg
Environmental Analyst 2/UGCG Lead
Land Acquisition and Management
Office of the Commissioner
CT Department of Energy and Environmental Protection
79 Elm Street
Hartford, CT 06106

Dear Dr. Clegg,

I am writing to you as the Executive Director of the Waterbury Housing Authority. It has come to my attention that the City of Waterbury via the Waterbury Development Corporation is applying for DEEP's Urban Green and Community Garden Grant for the renovation of Curtin Park.

Curtin Park is located at 84 Springbrook Road, less than half a mile from our Springbrook Apartments, an active and vibrant development in our HUD Low Income Public Housing Program portfolio. Springbrook is home to 56 local families, including more than 110 children.

The park is located within census tract 3515. And while Waterbury's median household income is $51,886 (far below the State of Connecticut's $99,900), some of its most economically disadvantaged residents live in our Springbrook Apartments.

The park needs significant improvements. Overgrown trees and vegetation create an unwelcoming entrance. Its most recent improvement was a splash pad constructed in 2018, however the balance of the park has not seen investment in many years. The tennis courts currently have trees growing through the asphalt surfaces, the basketball courts need to be resurfaced, the baseball field needs to be renovated, as does the playground area. The park also lacks a soccer field.

Our residents have limited access to green space and recreational facilities within walking distance from their homes, and some face transportation barriers that make reaching other parks difficult. Improvements to Curtin Park would be especially meaningful to the over 110 children at Springbrook, providing a welcoming place close to home to play, stay active, and enjoy the outdoors.

In closing, I strongly support the City's UGCG Application. Investing in Curtin Park would directly benefit our families and the surrounding neighborhood, and I look forward to seeing this project become a reality.

Sincerely,

Christian D'Orso
Executive Director

NAUGATUCK VALLEY
COUNCIL of GOVERNMENTS
21 West Main Street, 6th Floor, Waterbury, CT 06702 · 203.757.0535 · nvcogct.gov

October 5, 2026

Dr. Cameron Clegg
Environmental Analyst 2 / UGCG Lead
Land Acquisition and Management
Office of the Commissioner
Connecticut Department of Energy and Environmental Protection
79 Elm Street
Hartford, CT 06106

Dear Dr. Clegg:

I am writing on behalf of the Naugatuck Valley Council of Governments (NVCOG) in strong support of the City of Waterbury, through the Waterbury Development Corporation, and its application to the Connecticut Department of Energy and Environmental Protection's Urban Green and Community Garden Grant Program for the renovation of Curtin Park.

Curtin Park, located at 84 Springbrook Road, is less than half a mile from the Waterbury Housing Authority's Springbrook Apartments, an active development within the City's HUD Low-Income Public Housing portfolio. Springbrook is home to 56 local families, including more than 110 children.

The park is located within Census Tract 3515 and serves an area of significant economic need. Waterbury's median household income of $51,886 is well below Connecticut's statewide median of $99,900, and many of the residents in the Springbrook neighborhood face additional economic and transportation barriers. NVCOG is also currently updating the Regional Plan of Conservation and Development, which recognizes the importance of improving and expanding access to parks, open space, and recreational opportunities throughout the region.

Curtin Park is in need of significant investment. Overgrown trees and vegetation create an unwelcoming entrance, and although a splash pad was constructed in 2018, much of the remainder of the park has not seen substantial improvements in many years. The tennis courts have deteriorated to the point that vegetation is growing through the asphalt surface; the basketball courts require resurfacing; and the baseball field and playground area are also in need of renovation. The park currently lacks a soccer field as well.

For residents of Springbrook Apartments and the surrounding neighborhood, access to quality green space and recreational facilities within walking distance is particularly important. Transportation barriers can make it difficult for some families to reach other parks and recreational amenities. Improvements to Curtin Park would be especially meaningful to the more than 110 children living at Springbrook, providing a safe, welcoming, and accessible place close to home where they can play, stay active, and enjoy the outdoors.

For these reasons, NVCOG strongly supports the City of Waterbury's Urban Green and Community Garden Grant application. Investment in Curtin Park would provide meaningful

benefits to Springbrook families, the surrounding neighborhood, and the City as a whole while advancing broader regional goals related to equitable access to parks and open space.

We appreciate your consideration of this important project and look forward to seeing Curtin Park become a stronger community asset for Waterbury residents.

Respectfully,



Rick Dunne
Executive Director
Naugatuck Valley Council of Governments

Attachment Q

MASTER MUNICIPAL AGREEMENT

BETWEEN

CITY OF WATERBURY

AND

WATERBURY DEVELOPMENT CORPORATION

Dated: February 12th, 2014

TABLE OF CONTENTS

Page #

1. DEFINITIONS

1.1 Administrator, Administration, Administrating 3, 4
1.2 Designated Program..... 4
1.3 Project or Program Authorization Letter (PAL)..... 4

2. DESIGNATION OF PROGRAM ADMINISTRATOR AND PROJECT MANAGER

2.1 Designations..... 4
2.2 Prior Designations..... 4
2.3 PAL Approval..... 4, 5
2.4 Revisions PAL..... 5
2.5 Content of PAL..... 5

3. CONDUCT

3.1 WDC Performance..... 5
3.2 Services..... 5
3.3 City Responsibility..... 6
3.4 Assignability..... 6
3.5 Draw-Downs..... 6

4. SUBCONTRACTS

4.1 Monitoring..... 6
4.2 Content..... 6

5. PROCUREMENT STANDARDS AND SELECTION PROCESS:

5.1 Standards and Selection Process..... 7

6. COMPENSATION

6.1 Full and Complete Payment..... 7
6.2 Fee Schedule..... 7
6.3 Limitation of Payment..... 8
6.4 Record keeping..... 8
6.5 Reimbursement..... 8
6.6 Proposal Costs..... 8
6.7 Payment for Services..... 8
6.8 Liens..... 8
6.9 Review of Work..... 9

7. HOLD HARMLESS

7.1 WDC Indemnify..... 9

7.2 Claims..... 9
7.3 Insurance..... 10

8. INSURANCE

8.1 Insurance obtained and approved 10
8.2 Insurance Requirements.....10
8.3 Policies.....10
8.4 Failure to Maintain Insurance..... 11
8.5 Certificates of Insurance..... 11
8.6 Replacement/Renewal Certificates..... 11
8.7 Proof of Insurance.....11

9. CONFORMANCE WITH FEDERAL, STATE AND OTHER JURISDICTIONAL REQUIREMENTS

9.1 Permits, Laws, Taxes and Regulations..... 12
9.2 Taxes-Federal, State and Local.....12
9.3 Labor and Wages..... 12
9.4 Minimum Wage..... 12

10. DISCRIMINATORY PRACTICES

10.1 Discrimination – Labor Matters.....13
10.2 Equal Opportunity.....13

11. CONFORMANCE WITH CITY ORDINANCE, HIRING OF WATERBURY RESIDENTS

11.1 Ordinance on Hiring Waterbury Residents.....13
11.2 Failure to Comply with Good Jobs Ordinance..... 13

12. HUD SECTION 3

12.1 Work Subject to HUD Section 3 Clause.....14
12.2 Agree to comply with Section 3 Clause.....14
12.3 Post Section 3 Notice.....14
12.4 Agreement to Include Section 3 Clause.....14
12.5 Vacant Positions.....14
12.6 Noncompliance with HUD regulations.....14
12.7 Indian Housing Assistance.....15

13. TERMINATION

13.1 Termination of Agreement for Cause..... 15
13.2 Termination for Convenience of the City..... 15
13.3 Termination of Non-Appropriation or Lack of Funding.....15

14. RIGHTS UPON CANCELLATION OF TERMINATION

14.1 Termination for Cause..... 16
14.2 Termination for Lack of Funding or Convenience..... 16
14.3 Termination by the WDC..... 17
14.4 Assumption of Subcontracts..... 17
14.5 Delivery of Documents.....17
14.6 Ownership of Instruments of Professional Services..... 17

15. FORCE MAJEURE..... 17

16. SUBCONTRACTING

16.1 Approval to Subcontract..... 18
16.2 Responsibility..... 18

17. AUDIT..... 18

18. RISK OF DAMAGE AND LOSS.....18

19. ENTIRE AGREEMENT..... 19

20. INDEPENDENT CONTRACTOR RELATIONSHIP.....19

21. SEVERABILITY..... 19

22. SURVIVAL..... 20

23. CONFLICTS OR DISPUTES..... 20

24. DISPUTES; LEGAL PROCEEDINGS.....20

25. BINDING AGREEMENT..... 20

26. WAIVER.....20

27. GOVERNING LAWS..... 21

28. NOTICE.....21

29. ACKNOWLEDGEMENTS, NOTICES AND REPRESENTATIONS

29.1 Material Breach – Employee 21
29.2 Material Breach – Violation of the City's Code of Ordinance..... 21
29.3 Material Breach – Gratuity..... 22
29.4 Recovery of Payment..... 22
29.5 Kickback..... 22
29.6 Solicitation..... 22
29.7 Required Documents..... 22
29.8 Interest of City Officials..... 23
29.9 Prohibition Against Contingency Fees..... 23
29.10 Freedom of Information Act Notice..... 23

30. CITY AND WDC DESIGNEES:

30.1 City Designee..... 23
30.2 WDC Designee..... 23

ADDENDUMS

ADDENDUM A - CDBG Program Statement of Work; Specific CDBG Certifications
ADDENDUM B - HOME Program Statement of Work; Specific HOME Certifications
ADDENDUM C - Emergency Solutions Grant Statement of Work; ESG Certifications
ADDENDUM D - Project Management Scope of Services

EXHIBITS

EXHIBIT A - City Ordinances
§31.269 – WDC Designation of Authority
§38.020-38.071 – Solicitation and Award Methods of Source Selection
§34.15-34.22 – Hiring of Waterbury Residents on Certain Publicly-Funded Construction Projects, and as further amended from time to time.
EXHIBIT B - U.S. Department of Housing and Urban Development
SF 424 – Certifications
EXHIBIT C - CFR Procurement Requirements
24 C.F.R. §84.40 – 84.48
EXHIBIT D - List of Current WDC Projects

MASTER MUNICIPAL AGREEMENT
BY AND BETWEEN
THE CITY OF WATERBURY
AND
THE WATERBURY DEVELOPMENT CORPORATION

THIS MASTER AGREEMENT, for Project/Program Management Services ("Master Agreement") is entered into by and between the **CITY OF WATERBURY**, a municipal corporation organized and existing under the laws of the State of Connecticut, located at 235 Grand Street, Waterbury, Connecticut, (the "City"), and **THE WATERBURY DEVELOPMENT CORPORATION** ("WDC"), a federally-recognized 501(c)(3) not-for-profit, duly registered domestic corporation, located at 83 Bank Street, 3rd Floor, Waterbury, Connecticut, (the "WDC").

WHEREAS, the City undertakes, and may financially participate in municipal economic development projects;

WHEREAS, the City is the Grantee of certain grant program funds pursuant to certain State and/or Federal Government Funding Approval/Agreements by and between the City and such State and Federal Government agencies;

WHEREAS, the City, as a Grantee has undertaken certain responsibilities and obligations pursuant to the Funding Approvals/Agreements to administer the grants and programs;

WHEREAS, by City Ordinance, currently codified at §31.269, a copy of which is attached hereto as Exhibit A, has designated the WDC, to be, among other designations, the City's Economic Development Agency, Housing Site Development Agency and Community Development Agency;

WHEREAS, by City Ordinance, currently codified at §31.269(C) the WDC, when duly designated, is authorized to act on behalf of the City in the capacity of general contractor, project manager, construction manager, design builder, owner's representative and/or in such other similar development or construction capacity or capacities, without the requirement or necessity of a bid;

WHEREAS, the City is the Grantee of the Community Development Block Grant ("CDBG"), the Emergency Solutions Grant "(ESG") and the Home Investments Partnership Program ("HOME") pursuant to certain Funding Approvals/Agreements by and between the City and the United States Department of Housing and Urban Development ("HUD");

WHEREAS, the City, as Applicant and Grantee, has undertaken certain responsibilities and obligations to HUD pursuant to such Funding Approval/Agreements to administer such grants and programs and through WDC, as a consequence of such responsibilities and obligations has made certain certifications to HUD for the current year and in a similar manner in previous funding years, as set forth in a form attached hereto as Exhibit B;

WHEREAS, the City, is further desirous of having the WDC assume and to continue certain responsibilities and obligation to administer the grants and programs on a project-by-project basis;

WHEREAS, the City, is desirous of having the WDC assume and to continue the responsibilities for certain economic development projects, on a project-by-project basis;

WHEREAS, the WDC is agreeable to the assumption and continuance of such responsibilities and obligations to administer such grants and programs and oversee and manage such projects on behalf of the City;

WHEREAS, the City, has previously designated the WDC as the administrator of grants and programs, including but not limited to, administrator of the Community Development Block Grant ("CDBG"), the Emergency Solutions Grant ("ESG"), and the Home Investments Partnership Program ("HOME") (as said programs have been or may be renamed or amended from time to time) as well as the operation and management of various programs and projects, including but not limited to the Senior Shuttle Program, under a Revised Agreement between the City and WDC, dated April 21, 2008; and

WHEREAS, the City has previously duly designated the WDC as the Project Manager for certain Economic and Development projects and so approved by the Board of Alderman, as listed on Exhibit A and will continue its obligations under such designations pursuant to the terms of this Agreement.

NOW, THEREFORE, IN CONSIDERATION OF THE MUTUAL PROMISES HERE, THE CITY AND WDC HEREBY AGREE AS FOLLOWS:

1. DEFINITIONS:

1.1 "Administrator", "Administration", "Administrating" of a program or project shall mean conducting, managing, and administration of any and all aspects of operations required to perform and complete the designated program or project by either the City or the WDC, as applicable to the particular designated program or project, in whole or part, including but not limited to, advertising and awarding any contract(s) for performance of work by contractor(s) in whole or part, or any combination thereof, and undertaking all the administrative duties related to and required for the completion of the designated program or project, and shall be conducted in such manner or satisfactory to the City and consistent with any and all relevant Federal, State and City standards

required by the funding source(s) and/or as may be a condition of the program/project funds.

1.2 "Designated Program" or "Designated Project" shall mean any program or project that the City has undertaken or participates for which the WDC has been duly designated to Administer on behalf of the City and for which the WDC is authorized to act on behalf of the City in conformance with City Ordinances as set forth in this Agreement, Charter and applicable State and Federal Law and Regulations.

1.3 Project or Program Authorization Letter ("PAL") shall mean the written documentation that authorizes and delineates the Designated Project or Designated Program and authorizing funding source to the WDC.

2. DESIGNATION OF PROGRAM ADMINISTRATOR AND PROJECT MANAGER:

2.1 Authority to Designate: The City, through the Mayor, shall designate WDC as Program Administrator or Project Manager on a program or project basis, in writing pursuant to City of Waterbury Code of Ordinances as set forth in this Agreement and/or applicable City of Waterbury Charter provisions.

2.2 Prior Program Designations:

A. The City has, by written agreement, revision dated April 21, 2008, designated the WDC as the Program Administrator of all aspects of the CDBG Program, the HOME Program and the ESG Program, pursuant to and in accordance with the specific program requirements as set forth in the April 21, 2008 Agreement, at Addendum "A" (CDBG); Addendum "B" (HOME), and Addendum "C" (ESG) respectively. Said Addendum A, B, and C are attached hereto and incorporated by reference to this Agreement. This Agreement shall supersede all prior Agreements for the covered programs identified herein at Paragraph 2.2 as said programs have been or may be renamed or amended from time to time.

B. Pursuant to said prior Program Administrator designation referenced in Paragraph 2.2 herein, the WDC was designated as Program Administrator for the Senior Shuttle Program. Said designation shall continue and this Agreement shall supersede all prior agreements.

C. The City hereby ratifies and authorizes all previous programs and/or projects assigned to WDC by the City.

2.3 PAL Approval: The City shall issue to the WDC a Program and/or Project Authorization Letter ("PAL"), which will be addressed to the Chief Executive Officer of WDC and signed by the Mayor. Each PAL issued under this Agreement shall comply with City Ordinance provisions regarding the Execution of Contracts, as amended from

time to time and currently at §38.072 of City Ordinance. Inclusive of said requirements, but not limited thereto and incorporated by reference are the specific following requirements:

A. Execution by the Mayor: The Mayor, on behalf of the City shall execute each PAL.

B. Role of Corporation Counsel: The Corporation Counsel, shall approve each PAL as to form and compliance with all legal requirements, including City Charter and Ordinances.

C. Approval by the Board of Aldermen: Each PAL shall be subject to Board of Aldermen approval.

2.4 Revisions to the PAL: Any modification to the scope, the allowed funding amount, or cost breakdown of the Designated Program or Designated Project must be signed by the Mayor, and is subject to approvals and in accordance with the procedures set forth above 2.3, any revised PAL will supersede the previously issued PAL and will control unless otherwise provided.

2.5 Content of the PAL: The PAL issued by the City shall set forth, at a minimum:

A. The Funding source(s); the related funding authorization or program information; any associated funding ratio between the City and other funding sources including Federal or State Government sources, as applicable;

B. The maximum City funds or ratio;

C. City Certification of fund availability;

D. An estimated cost breakdown for the designated Project or Program, if applicable;

E. The total estimated Project/Program amount;

3. CONDUCT:

3.1 WDC to perform and complete: Upon approval of the PAL, the WDC in its own name may apply for state and federal grants and otherwise shall administer and engage in all activity associated with the Designated Program/Designated Project in accordance with the PAL and this Master Agreement.

3.2 Service: With respect to program and project management, the WDC shall, in its own name, perform the services as set forth in Addendum D herein on each

designated project or program in addition to the services set forth and further amplified in each PAL;

3.3 The City shall remain primarily responsible and liable for all grant and program funds awarded and to be expended by the WDC on behalf of the City pursuant to this Master Agreement. As such, in order to allow proper monitoring and oversight of such expenditures by the City, the WDC will set up requests for draw-downs against grant and program funds allocated to the City, using software or other draw down protocols as provided by a grant program or funding source, including but not limited to IDIS software system provided by HUD; provided, however, that final authorization to expend such funds shall only occur after review and final approval of any such draw-downs/expenditures by the City, utilizing IDIS or such other software or protocols adopted from time to time.

3.4 Assignability: The WDC shall not assign any interest in this Master Agreement, and shall not transfer any interest in the same, by assignment or novation, without the prior written approval of the City and subject to any applicable City Ordinance and Charter provisions.

3.5 Draw-Downs: Upon final approval by the City for any draw-down(s) funding will be electronically transferred directly to the City's bank account for subsequent re-transfer electronically to the WDC's bank account or shall be transferred by such other protocol that is established from time to time by a grant or other funding source. The City shall only record receipt of the funds and the transfer of those funds to WDC, but shall not record any expenses. WDC shall record receipt of such transfer from the City and the expenditures made there from.

4. SUBCONTRACTS:

4.1 Monitoring: The WDC will monitor all subcontracted services on a regular basis, to the reasonable satisfaction of the City, to assure contract compliance. Results of monitoring efforts shall be summarized in written reports and supported with documented evidence of follow-up actions taken to correct areas of noncompliance.

4.2 Content: The WDC shall insure that any subcontractor agreement entered into in the performance of this Master Agreement contains all provisions mandated by Federal, State and local law and/or regulations as set forth herein. All subcontracts shall further include any other provisions of this Master Agreement that may be applicable either explicitly or by incorporation of this Master Agreement by reference or as requested by the PAL. Despite any failure to include any provision(s) contemplated by this paragraph in the subcontract, the WDC will nonetheless be bound by any and all applicable provision contained in this Master Agreement.

5. PROCUREMENT STANDARDS AND SELECTION PROCESS:

5.1 Standards and selection process: Unless otherwise required by a funding source, to expedite and streamline the approval and execution process for any contract or subcontract pursuant to a PAL, the WDC shall undertake to insure that all contracts and subcontracts under this Master Agreement are awarded on a fair, and open competitive basis, as directed by the City Director of Purchasing, utilizing one or more of the following procedures:

A. The WDC shall procure all materials, property or services in accordance with the requirements of 24C.F.R. §84.40-84.48, establishing procedures for the procurement of supplies and other expendable property, equipment, real property, and other services with Federal Funds, attached hereto as Exhibit C; or

B. Any procurement as defined by City Ordinance §38.020 shall be made by the WDC in accordance with a process that is identical to the City's Solicitation and Award Methods of Source Selection" requirements pursuant to City Ordinance §38.020-38.071 as amended from time-to time; attached hereto as Exhibit A; or

C. As performed by and under the direction and supervision of the City's Director of Purchasing and in his sole discretion.

6. COMPENSATION:

6.1 Full and Complete Payment: Compensation provided under this Section 6 for Designated Project/Designated Program shall consist of full and complete payment for all reasonable costs assumed by the WDC in performing a PAL, including, but not limited to, salaries, fringe benefits, including vacation, and overhead; WDC fees; costs of materials and supplies; printing and reproduction; meetings, consultation and presentations; travel expenses; postage; telephone; clerical expenses, and all similar expenses. The provisions of this Section 6 do not apply to or affect funds that may be appropriated by the City to the WDC from time to time for the WDC's general purposes. No direct costs shall be reimbursed by the City other than as provided herein, except for legal fees incurred by the WDC in the defense of third party claims as a result of the City's negligence, provided that the WDC has properly discharged its services under this Agreement and, provided further, that the WDC immediately informs the City in writing of any such claims, affording the City the opportunity to determine, in its sole discretion, whether it desires to undertake the defense of any such claims.

6.2 Fee Schedule: The fee payable to the WDC under this Agreement shall be set forth on a project-by-project basis pursuant to each PAL.

6.3 Limitation of Payment: Compensation payable to the WDC is limited to those fees set forth in this Section 6 herein. Such compensation shall be paid by the City upon review and approval of the WDC's invoices for payment, submitted no more often than once a month, and review of the work, services, reimbursable costs, deliverables, etc. required in this agreement and review as may be further required by the Charter and Ordinances of the City. The WDC's invoices shall describe the work, the actual hours worked by each WDC employee, services, reimbursable costs, reports, plans, specifications, deliverables, etc. rendered and the compensation sought therefore in a form and with detail and clarity acceptable to the City.

6.4 Recording Keeping: The WDC shall document all expenses it incurs and maintain all records relating to each Designated Project or Designated Program costs, including but not limited to its payroll hours on timesheets of staff working directly on any Designated Project or Designated Program, material purchases made by the WDC and reimbursement due to the WDC for use of the WDC-owned or rented equipment. Rates of reimbursement will be based on existing city audited rate, if none, then pursuant to reasonable industry standards. Reimbursable payroll costs are limited to actual WDC payroll for work on the Project or Program and fringe benefits as set forth in this Section 6.

6.5 Reimbursement: The WDC shall seek reimbursement for its expenditures first from any Project or Program funding source as may be allowed or granted. Upon approval of reimbursement for any portion of the WDC costs and expenses, by any other funding source, the WDC shall submit to the City invoicing for the City's proportionate share of the reimbursable costs and expenses pursuant to any cost sharing established by the PAL.

6.6 Proposal Costs: All costs of the WDC in preparing its estimate of cost for this Designated Project or Designated Program shall be solely borne by the WDC and are not included in the compensation to be paid by the City to the WDC under this Agreement or any other agreement.

6.7 Payment for Services, Materials and Employees: The WDC shall be fully and solely responsible for the suitability of and compliance with this Agreement, of all labor, services, equipment, materials, reports, plans, specifications, deliverables, incidentals, etc. furnished to the City by the WDC under this Agreement. The WDC shall promptly pay all employees as their pay falls due, shall pay promptly as they fall due all bills for labor, services, equipment, materials, reports, plans, specifications, deliverables, incidentals, etc., going into the work, and all bills for insurance, bonds, Worker's Compensation coverage, Federal and State Unemployment Compensation, and Social Security charges applicable to this project. Before final payment is made, the WDC shall furnish a legal statement to the City that all payments required under this subparagraph have been made.

6.8 Liens: Neither the final payment nor any part of any retained percentage, if any, shall become due until the WDC, if requested by the City, shall deliver to the City

a complete release of all liens arising out of this agreement, or receipts in full (subject to contractual retainages) in lieu thereof, and, if required, in either case, an affidavit that so far as the WDC has knowledge or information, the releases and receipts include all the labor and material for which a lien could be filed; but the WDC may, if any subcontractor refuses to furnish a release or receipt in full, furnish a bond satisfactory to the City, to indemnify it against any lien. If any lien remains unsatisfied after all payments are made, the WDC shall refund to the City all moneys that the City may be compelled to pay in discharging such a lien, including all costs and a reasonable attorney's fee.

6.9 Review of Work: The WDC shall permit the City to review, at any time, all work performed under the terms of this Agreement at any stage of the work. The WDC shall maintain or cause to be maintained, throughout the duration of the Project and for a reasonable period thereafter as may be necessary for any required or desired audits, all records, books or other documents relative to salaries, fringe benefits, overhead, charges, costs, expenses, fees, alleged breaches of the agreement, settlement of claims or any other matter pertaining to the WDC's demand for payment. Further any and all such records of the WDC pertaining to the Project shall be available for review by the City at all reasonable times. The City shall not certify fees for payment to the WDC until the City has determined that the WDC has completed the work in accordance with the requirements of this Agreement.

7. HOLD HARMLESS:

7.1 The WDC shall indemnify, defend, and hold harmless the City and its boards, the City's Board of Education (if applicable), commissions, agents, officials and employees from and against all claims, suits, damages, losses, judgments, costs and expenses including attorney's fees arising out of or resulting from the delivery of the labor, services, equipment, materials, reports, plans, specifications, deliverables, incidentals, etc., provided that any such claims, suits, damages, losses, judgments, costs or expenses (a) are attributable to bodily injury, sickness, disease or death, or injury to or destruction of tangible property (other than the services itself) including the loss of use resulting there from, and (b) are caused by any willful or negligent act or omission of the WDC, its employees, its subcontractors, or anyone employed by them or anyone for whose acts any of them may be liable.

7.2 In any and all claims against the City or any of its boards, agents, employees or officers by the WDC or any employee of the WDC, any subcontractor, anyone directly or indirectly employed by any of them or anyone for whose acts any of them may be liable, the indemnification obligation under Paragraph 7.1, herein, shall not be limited in any way by any limitation on the amount or type of damages, compensation or benefits payable by or for the WDC or any subcontractor under Worker's Compensation Acts, disability benefit acts or other employee benefit acts.

7.3 The WDC understands and agrees that any insurance required by this agreement, or otherwise provided by the WDC, shall in no way limit the responsibility to indemnify, defend, keep and hold harmless the City as provided in this agreement.

8. INSURANCE:

8.1 The WDC shall not commence work under this agreement until all insurance required under this Section 8 has been obtained by the WDC and/or such insurance has been approved by the City. The WDC shall not allow any subcontractor to commence work on any subcontract until all insurance required of any such contractor has been so obtained and approved by the WDC.

8.2 Insurance Requirements: Insurance shall be provided by insurers that are satisfactory to the WDC, authorized to do business in the State of Connecticut, that have at least an "A-" Best's Rating, and are in an A.M. Best financial size category of VII or higher. The A.M. Best classifications are based on the most current A.M. Best Company ratings or an equivalent City approved rating system.

8.3 Policies: The WDC's General, Automobile and Excess Liability Insurance policies shall be endorsed to add the City as an additional insured. The insurance afforded the additional insured shall be primary insurance and the coverage and limits provided under the WDC's policies shall not be reduced or prorated by the existence of any other insurance applicable to any loss the additional insured may have suffered. Each insurance policy shall state that the insurance company shall agree to investigate and defend the insured against all claims for damages, provided the claim is for a loss covered by the terms of the applicable policy, even if groundless. If any insurance required herein is to be issued or renewed on a claims made form as opposed to an occurrence form, the retroactive date for coverage shall be no later than the commencement date of this agreement and shall provide that in the event of cancellation or non-renewal, the discovery period for insurance claims ("Tail Coverage") shall be available for at least 60 months.

The following policies with stated limits shall be maintained, in full force and effect, at all times during which the services are to be performed by the WDC:

A. General Liability Insurance: $1,000,000.00 per occurrence, $2,000,000.00 aggregate. Providing coverage to protect the City for all damages arising out of bodily injuries sickness or death of all persons in any one accident or occurrence and for all damages arising out of destruction of property in any one accident or occurrence.

B. Automobile Liability Insurance: $1,000,000.00 combined single limit (CSL). Providing coverage to protect the City with respect to claims for damage for bodily injury and or property damage arising out of ownership,

maintenance, operation, use or loading and unloading of any owned or non-owned vehicle

C. Workers' Compensation: Statutory Limits within the State of Connecticut. The WDC shall comply with all State of Connecticut statutes as it relates to workers' compensation.

D. Excess Liability Insurance: $3,000,000.00 aggregate limit. Comprehensive general liability umbrella insurance coverage.

8.4 Failure to Maintain Insurance: In the event the WDC fails to maintain the minimum required coverage as set forth herein, the City may, at its option, purchase same and offset the WDC's invoices for the cost of said insurance.

Cancellation: The WDC shall provide a copy of all notices of cancellation received from their insured within 5 days of said receipt, by them of said notice of cancellation, regardless of the reason for such cancellation.

8.5 Certificates of Insurance: At the time the WDC executes this agreement, it shall furnish to the City, subject to City approval, certificate(s) of insurance verifying the above coverage's, including the naming of the City of Waterbury, as follows:

"The City of Waterbury and its Board of Education (if applicable)
are listed as additional insured as their interests may appear".

8.6 The WDC must supply replacement/renewal certificates at least 30 days prior to the expiration of the policy (ies). Said certificates shall contain a provision that coverage afforded under the policies shall not be cancelled or reduced for any reasons unless notice of not less than thirty (30) calendar days has been mailed to the Risk Manager, 235 Grand Street, Waterbury, CT. 06702.

8.7 Upon request, the WDC shall deliver to the City a copy of the WDC's insurance policies, endorsements, and riders.

9. CONFORMANCE WITH FEDERAL, STATE AND OTHER JURISDICTIONAL REQUIREMENTS:

By executing this Agreement, the WDC represents and warrants that, at all pertinent and relevant times to the Agreement, it will remain in full compliance with all applicable statutes, acts, ordinances, guidelines, resolutions, orders, judgments, decrees, injunctions, rules, and regulations of all government authorities applicable to performance by the WDC of services hereunder, including those having jurisdiction over its registration and licensing to perform services hereunder; including, but not limited to, the following: EQUAL EMPLOYMENT OPPORTUNITY ACT; COPELAND ANTI-KICKBACK ACT, as supplemented in the Department of Labor Regulations (29 CFR Part 3); DAVIS-BACON ACT as supplemented by Department of Labor Regulations (29

CFR Part 5); Section 103 and 107 of the Contract Work Hours and Safety Standards Act, as supplemented by the Department of Labor Regulations (29 CFR Part 5); and the HOUSING and COMMUNITY DEVELOPMENT ACT of 1974, as amended. All applicable sections of the City Charter and Code of Ordinances are incorporated by reference and made a part hereof.

The WDC hereby agrees and shall comply with any and all requirements of the Freedom of Information Act, as it may be amended from time-to-time, with reference to this contract and any work performed by WDC and/or any of its subcontractors or agents.

9.1 Permits, Laws, Taxes and Regulations. Permits and licenses necessary for the delivery and completion of the WDC's work and services shall be secured in advance and paid by the WDC. The WDC shall give all notices and comply with all laws, ordinances, rules and regulations bearing on the conduct of the work and services as specified.

9.2 Taxes-Federal, State and Local. The City is exempt from Federal Excise and Transportation, State and Local Sales and Use Taxes, including without limitation, taxes that would otherwise be imposed upon the WDC for transactions required or necessitated hereunder between it and its subcontractors, suppliers, etc. The WDC remains liable, however, for any applicable tax obligations it incurs. Moreover, the WDC represents that the proposal and pricing contained in any PAL will not include an amount payable for said taxes.

9.3 Labor and Wages. The WDC shall conform to the labor laws of the State of Connecticut, and all other laws, ordinances, and legal requirements affecting the work in Connecticut and shall require such conformance in its contracts with subcontractors.

9.4 The WDC is aware of the provisions of Title 31, §53 of the Connecticut General Statutes, latest revision (the "Act"), concerning the payment of minimum wages and other payments or contributions established by the State of Connecticut Labor Commissioner for work on public facilities. The provisions of the Act are incorporated by reference and made a part of this agreement. The Act provides, in part, that the prevailing wage law applies to (i) new construction where the total cost of all work performed by all contractors and subcontractors is equal to or greater than $400,000.00, and (ii) remodeling, refurbishing, rehabilitation, alteration or repair of any project where the total cost of all work performed by all contractors and subcontractors is equal to or greater than $100,000.00.

10. DISCRIMINATORY PRACTICES:

In performing this agreement, the WDC shall not discriminate against any employee or applicant for employment, with respect to his or her hire, tenure, terms, conditions or privileges of employment, or any matter directly or indirectly related to employment, because of race, color, sex, age, religious creed, disability, national origin or ancestry, marital status, family status, prior psychiatric treatment, health care, military

status or source of income or because of a handicap that is unrelated to the employee's or the applicant's ability to perform the duties of a particular job or position. Subcontracts with each subcontractor shall contain a provision requiring non-discrimination in employment as herein specified. This covenant is required pursuant to §93.04 of the Code of Ordinances of the City and any breach thereof may be regarded as a material breach of this agreement. Said provisions with subcontractors shall require conformity and compliance with all Local, State and Federal laws, rules and regulations and Executive orders pertaining to discrimination and equal opportunity requirements.

10.1 Discrimination Because of Certain Labor Matters: No person employed on the work covered by this agreement shall be discharged or in any way discriminated against because such person has filed any complaint or instituted or caused to be instituted any proceeding or has testified or is about to testify in any proceeding under or related to the labor standards applicable hereunder to its employer.

10.2 Equal Opportunity: In its execution of the performance of this agreement, the WDC shall not discriminate and shall comply with applicable laws prohibiting discrimination on the grounds of race, color, religion, sex, national origin or citizenship status, age or handicap. The WDC agrees to comply with all Local, State and Federal laws, rules and regulations and Executive orders pertaining to discrimination and equal opportunity requirements, and will require the same of all subcontractors.

11. CONFORMANCE WITH CITY ORDINANCE, HIRING OF WATERBURY RESIDENTS

Conformance with City Ordinance §34.15; Hiring Of Waterbury Residents On Certain Publicly-Funded Construction Projects, as amended from time-to-time. The Ordinance is attached hereto as Exhibit A and a copy of the current ordinance shall be prominently including in each contract/subcontract subject to §34.15.

11.1 The WDC shall comply with the specific requirements of "An Ordinance Concerning the Hiring of Waterbury Residents on Certain Publicly-Funded Construction Projects" (the "Good Jobs Ordinance"), as may be amended from time to time and as set forth in Chapter 34 of the Code of Ordinances of the City and shall require such compliance by subcontactors in its subcontracts. The Contractor does hereby acknowledge that it has reviewed a copy of the Good Jobs Ordinance and that it has read the Ordinance and that Contractor is familiar with the obligations imposed on the Contractor by the Good Jobs Ordinance.

11.2 Failure of the Contractor or its Subcontractors to comply with the Good Jobs Ordinance shall be a material breach of this Agreement.

12. HOUSING AND URBAN DEVELOPMENT SECTION 3 CLAUSE:

In the event a PAL is funded, in whole or in part, through Housing and Urban Development assistance, 24 C.F.R. §135.38 may apply and the WDC shall then be

required to comply with and include in subcontracts, the following language (referred to as the "Section 3 clause"):

12.1 The work to be performed under this contract is subject to the requirements of Section 3 of the Housing and Urban Development Act of 1968, as amended, 12 U.S.C. § 1701u (Section 3). The purpose of Section 3 is to ensure that employment and other economic opportunities generated by HUD assistance or HUD-assisted Projects covered by Section 3, shall, to the greatest extent feasible, be directed to low and very low-income persons, particularly persons who are recipients of HUD assistance for housing.

12.2 The parties to this contract agree to comply with HUD's regulations in 24 C.F.R. part 135, which implement Section 3. As evidenced by their execution of this contract, the parties to this contract certify that they are under no contractual or other impediment that would prevent them from complying with the part 135 regulations.

12.3 The contractor agrees to send to each labor organization or representative of workers with which the contractor has a collective bargaining agreement or other understanding, if any, a notice advising the labor organization or workers' representative of the contractor's commitments under this Section 3 clause, and will post copies of the notice in conspicuous places at the work site where both employees and applicants for training and employment positions can see the notice. The notice shall describe the Section 3 preference, shall set forth minimum number and job titles subject to hire, availability of apprenticeship and training positions, the qualifications for each; and the name and location of the person(s) taking applications for each of the positions; and the anticipated date the work shall begin.

12.4 The contractor agrees to include this Section 3 clause in every subcontract subject to compliance with regulations in 24 C.F.R. part 135, and agrees to take appropriate action, as provided in an applicable provision of the subcontract or in this Section 3 clause, upon a finding that the subcontractor is in violation of the regulations in 24 C.F.R. part 135. The contractor will not subcontract with any subcontractor where the contractor has notice or knowledge that the subcontractor has been found in violation of the regulations in 24 C.F.R. part 135.

12.5 The contractor will certify that any vacant employment positions, including training positions, that are filled (1) after the contractor is selected but before the contract is executed, and (2) with persons other than those to whom the regulations of 24 C.F.R. part 135 require employment opportunities to be directed, were not filled to circumvent the contractor's obligations under 24 C.F.R. part 135.

12.6 Noncompliance with HUD's regulations in 24 C.F.R. part 135 may result in sanctions, termination of this contract for default, and debarment or suspension from future HUD assisted contracts.

12.7 With respect to work performed in connection with Section 3 covered Indian housing assistance, section 7(b) of the Indian Self-Determination and Education Assistance Act (25 U.S.C. § 450e) also applies to the work to be performed under this contract. Section 7(b) requires that to the greatest extent feasible (i) preference and opportunities for training and employment shall be given to Indians, and (ii) preference in the award of contracts and subcontracts shall be given to Indian organizations and Indian-owned Economic Enterprises. Parties to this contract that are subject to the provisions of Section 3 and section 7(b) agree to comply with Section 3 to the maximum extent feasible, but not in derogation of compliance with section 7(b).

13. TERMINATION:

13.1 Termination of Agreement for Cause: If, through any cause, in part or in full, the fault of the WDC, the WDC shall materially fail to fulfill in a timely and proper manner its obligations under this agreement, or if the WDC shall commit a material violation any of the covenants, agreements, or stipulations of this Agreement, the City shall thereupon have the right to terminate this Agreement by giving written notice to the WDC of such termination and specifying the effective date thereof, at least fifteen (15) days before the effective date of such termination and an opportunity to cure by the end of the fifteen (15) day period. In the event of such termination, all finished or unfinished documents, data, studies, reports, specifications, deliverables, etc. prepared by the WDC under this agreement shall, at the option of the City, become the City's property, and the WDC shall be entitled to receive just and equitable compensation for any satisfactory work completed for such.

Notwithstanding the above, the WDC shall not be relieved of liability to the City for damages sustained by the City by virtue of any breach of this Agreement by the WDC, and the City may withhold any payments to the WDC for the purpose of setoff until such time as the exact amount of damages due the City from the WDC is determined.

13.2 Termination for Convenience of the City: The City may terminate this Agreement at any time for the convenience of the City, by a notice in writing from the City to the WDC. If this Agreement is terminated by the City as provided herein, the WDC will be paid an amount which bears the same ratio to the total compensation as the services actually performed bear to the total services of the WDC covered by this agreement, less payments of compensation previously made.

13.3 Termination for Non-Appropriation or Lack of Funding: The WDC acknowledges that the City is a municipal corporation and that this Agreement is subject to the appropriation of funds by the City sufficient for this agreement for each budget year in which this agreement is in effect. The WDC therefore agrees that the City shall have the right to terminate this Agreement in whole or in part without penalty in the event sufficient funds to provide for City payment(s) under this agreement is/are not

appropriated, not authorized or not made available pursuant to law, or such funding has been reduced pursuant to law.

A. Effects of Non-Appropriation: If funds to enable the City to effect continued payment under this Agreement are not appropriated, authorized or otherwise made available by law, the City shall have the right to terminate this Agreement without penalty at the end of the last period for which funds have been appropriated, authorized or otherwise made available by law by giving written notice of termination to the WDC.

B. Effects of Reduced Levels of Funding: If funding is reduced by law, or funds to pay the WDC for the agreed to level of the products, services and functions to be provided by the WDC under this Agreement are not appropriated, authorized or otherwise made available by law, the City may, upon seven (7) business days written notice to the WDC, reduce the level of the products, services or functions in such manner and for such periods of time as the City may elect. The services to be performed and the charges payable under this Agreement shall be equitably adjusted to reflect such reduced level of products, services or functions and the parties shall be afforded the rights set forth in this agreement.

C. No Payment for Lost Profits: In no event shall the City be obligated to pay or otherwise compensate the WDC for any lost or expected future profits.

14. RIGHTS UPON CANCELLATION OR TERMINATION:

14.1 Termination for Cause: In the event the City terminates this Agreement for cause, the WDC shall relinquish to the City any applicable interest, title and ownership including, but not limited to, perpetual use of any proprietary rights in and to the documents, data, studies, reports, specifications, deliverables, etc. provided to, in possession of, and properly invoiced and paid for by the City (except to the extent such invoiced amount is disputed). With regard to third party products, the WDC shall transfer all licenses to the City which the WDC is permitted to transfer in accordance with the applicable third party license. The City shall have no financial obligation to compensate the WDC for such terminated documents, data, studies, reports, specifications, deliverables, etc. unless payment is otherwise approved by the City prior to such termination. In the event of any litigation related to the termination of this Agreement, the prevailing party shall be entitled to its reasonable attorney fees and court awarded fees and costs incurred.

14.2 Termination for Lack of Funding or Convenience: In the event of termination by the City for lack of funding or convenience, the City shall pay the WDC for all documents, data, studies, reports, specifications, deliverables, etc. (including any holdbacks), installed and delivered to the City as of the Termination Date and the WDC shall relinquish to the City any applicable interest, title and ownership including, but not

limited to perpetual use of any proprietary rights in and to said documents, data, studies, reports, specifications, deliverables, etc. in possession of and paid for by the City (except to the extent any invoiced amount is disputed). The WDC shall be required to exercise commercially reasonable efforts to mitigate damages. In the event of a termination for Lack of Funding or Convenience the City and the WDC may negotiate a mutually acceptable payment to the WDC for reasonable demobilization expenses. Said demobilization expenses, if any, shall be handled in accordance with the provision of this agreement pertaining to Changes in the Work.

14.3 Termination by the WDC: The WDC may, by written notice to the City, terminate this agreement if the City materially breaches, provided that the WDC shall give the City thirty (30) calendar days prior written notice and an opportunity to cure by the end of said thirty day period. In the event of such termination, the WDC will be compensated by the City for work performed prior to such termination date and the WDC shall deliver to the City all deliverables as otherwise set forth in this agreement.

14.4 Assumption of Subcontracts: In the event of termination, the City shall assume any and all subcontracts for products, services and functions provided exclusively under this Agreement and may further pursue completion of the work under this Agreement by replacement contract or otherwise as the City may in its sole judgment deem expedient.

14.5 Delivery of Documents: In the event of termination, (i) the WDC shall promptly deliver to the City, in a manner reasonably specified by the City, all labor, services, equipment, materials, reports, plans, specifications, deliverables, incidentals, etc and other tangible items furnished by, or owned, leased, or licensed by, the City, and (ii) the City shall pay the WDC for all services performed and deliverables completed and accepted (pro-rated for deliverables partially completed) prior to the effective date of the termination (except to the extent any invoice amount is disputed).

14.6 Ownership of Instruments of Professional Services: The City acknowledges that the WDC's documents, data, studies, reports, specifications, deliverables, etc. created and to be created pursuant to this agreement, including electronic files, are Instruments of Professional Services. Nevertheless, subject to applicable trademark, copyright or patent law, the final Instruments of Professional Services, including, but not limited to, documents, data, studies, reports, specifications, deliverables, etc. prepared for the City under this agreement shall become the property of the City upon City payment for that Instrument of Professional Services and the City reserves the right to use the Instruments of Professional Services.

15. FORCE MAJEURE:

The WDC shall not be held responsible for delays nor be subject to liquidated damages when such delays are caused by conditions beyond its control, including without limitation:

A. Acts of God, fire, explosion, epidemic, cyclone, flood, war, strikes, revolution, civil commotion, or acts of public enemies.

B. Change of law and order, proclamation, regulation, ordinance, or governmental requirement.

C. Delays caused by the WDC's vendors, except where such delays are the result of lack of adequate coordination by the WDC.

Upon cessation of work for reason of force majeure delays, the WDC shall use its best efforts to meet the schedule set forth in a PAL.

16. SUBCONTRACTING:

16.1 The WDC shall not, without the prior written approval of the City, subcontract, in whole or in part, any of the WDC's services. Any subcontractor so approved shall be required to secure and maintain insurance coverage equal to or better than that required of the WDC and shall name the City as an additional insured party and said subcontractors shall deliver to the City a certificate of insurance evidencing such coverages. All subcontractors shall comply with all Federal, State and Local, laws, regulations and ordinances but such requirement shall not relieve the WDC from its requirement that all work and services provided or required hereunder shall comply with all Federal, State and Local, laws, regulations and ordinances.

16.2 The WDC shall be as fully responsible to the City for the acts and omissions of the WDC's subcontractors, and of persons either directly or indirectly employed by them, as it is for the acts and omissions of persons directly employed by the WDC.

17. AUDIT:

The City reserves the right to audit the WDC's books of account in relation to this agreement any time during the period of this agreement or at any time during the twelve month period immediately following the closing or termination of this agreement. In the event the City elects to conduct such an audit, the WDC shall immediately make available to the City all records pertaining to this agreement, including, but not limited to, payroll records, bank statements and canceled checks.

18. RISK OF DAMAGE AND LOSS:

The WDC shall be solely responsible for causing the timely repair to and/or replacement of, City personal property or item(s) intended to become City property hereunder, where the need for repair or replacement was caused solely by the WDC, by someone under the care and/or control of the WDC by any subcontractor of the WDC, or by any shipper or delivery service if the risk of loss was allocated to the WDC upon shipment. The WDC shall be solely responsible for all costs and expenses, including but

not limited to shipping, delivery, insurance, etc, associated with the foregoing repair and replacement obligation. Further, the WDC shall be solely responsible for securing the City's written acceptance of all completed repairs and replacements required hereunder. The City hereby retains sole discretion to determine whether a repair or a replacement is the proper remedy.

19. ENTIRE AGREEMENT:

This agreement shall constitute the complete and exclusive statement excepted as provided; other than as direct on behalf of the City, of the Contract between the parties as it relates to this transaction and supersedes all previous agreements and understandings, whether written or oral, relating to such subject matter. Any amendment to this agreement must be in writing and agreed to and executed by the City and the WDC.

20. INDEPENDENT CONTRACTOR RELATIONSHIP:

The relationship between the City and the WDC is that of client and independent contractor, and as further defined in Sections 31.265 through Sections 31.270 of the City of Waterbury Code of Ordinances. No agent, employee, or servant of the WDC shall be deemed to be an employee, agent or servant of the City. The WDC shall be solely and entirely responsible for its acts and the acts of its agents, employees, servants and subcontractors during the performance of this agreement. It is the express intention of the parties hereto, and the WDC hereby agrees and covenants, that it and any and all third party(ies) and subcontractor(s) retained by the WDC hereunder is/are not and shall not be deemed an employee of the City of Waterbury, but is/are and shall remain an independent contractor relative to the City and that nothing herein shall be interpreted or construed as creating or establishing the relationship of employer-employee between the City of Waterbury and the WDC or between the City of Waterbury and any third party(ies) or subcontractor(s). Thus, the WDC hereby covenants and agrees that it, its subcontractor(s) and third party (ies) shall not be entitled to the usual characteristics of employment, such as income tax withholding, F.I.C.A. deductions, pension or retirement privileges, Workers Compensation coverage, health benefits, etc. and that the WDC shall be solely and entirely responsible for its acts and the acts of its agents, employees, servants, representatives, subcontractors and third party (ies).

Notwithstanding the designation of an independent contractor, the WDC hereby agrees that it shall be subject to any and all requirements of the Freedom of Information Act, as it may be amended from time-to-time, with reference to this contract and any work performed by WDC and/or any of its subcontractors or agents.

21. SEVERABILITY:

Whenever possible, each provision of this Agreement shall be interpreted in such a manner as to be effective and valid under applicable law. If any provision of this agreement, however, is held to be prohibited or invalid under applicable law, such provision shall be deemed restated to reflect the original intentions of the parties, as

nearly as possible in accordance with applicable law, and if capable of substantial performance, the remaining provisions of this agreement shall be enforced as if this agreement was entered into without an invalid provision. If the ruling and/or controlling principle of law or equity leading to the ruling is subsequently overruled, modified or amended by legislation, judicial or administrative action, then the provision(s) in question as originally set forth in this agreement shall be deemed valid and enforceable to the maximum extent permitted by the new controlling principal of law or equity.

22. SURVIVAL:

Any provisions of this Agreement that impose continuing obligations on the parties shall survive the expiration or termination of this agreement for any reason.

23. CONFLICTS OR DISPUTES:

This Agreement represents the full and complete concurrence between the City and the WDC, governs all disputes between them and supersedes all statements to the contrary occurring either in proposals or other prior agreements, oral or written, and all other communications between the parties relating to this subject. This agreement or any section thereof shall not be construed against any party due to the fact that the agreement or any section thereof was drafted by such party.

24. DISPUTES; LEGAL PROCEEDINGS; WAIVER OF TRAIL BY JURY AND CONTINUED PERFORMANCE:

The WDC agrees that its waives a trial by jury as to any and all claims, causes of action or disputes arising out of this agreement or services to be provided pursuant to this agreement. Notwithstanding any such claim, dispute or legal action, the WDC shall continue to perform services under this agreement in a timely manner, unless otherwise directed by the City.

25. BINDING AGREEMENT:

The City and the WDC each bind themselves, and their successors, assigns and legal representatives to the other party to this Agreement and to the successors, assigns and legal representatives of such other party with respect to all covenants of this Agreement.

26. WAIVER:

Any waiver of the terms and conditions of this agreement by either of the parties hereto shall not be construed to be a waiver of any other term or condition of this agreement.

27. GOVERNING LAWS:

This Agreement, its terms and conditions and any claims arising there from shall be governed by the laws of the State of Connecticut.

28. NOTICE:

Except as otherwise specifically prohibited in this Agreement, whenever under this Agreement approvals, authorizations, determinations, notices, satisfactions or waivers are required or permitted, such items shall be effective and valid only when given in writing signed by a duly authorized officer of the City or the WDC, and delivered in hand or sent by mail, postage prepaid, to the party to whom it is directed, which until changed by written notice, are as follows:

WDC: Todd M. Montello, CEO
83 Bank Street, 3rd Floor
Waterbury, CT 06702

City: City of Waterbury
c/o Joseph Geary, Chief of Staff
Mayor's Office
235 Grand Street
Waterbury, CT 06702

29. ACKNOWLEDGMENTS, NOTICES AND REPRESENTATIONS:

The WDC shall supply the documents, data, studies, reports, specifications, deliverables, etc. under this Contract shall comply with all applicable Federal, State and Municipal statutes, regulations, charters, ordinances, rules, etc, whether or not they are expressly stated in this Contract, including but not limited to the following:

29.1 It shall be a material breach of this Contract, and, except as may be permitted by regulations or rulings of the City of Waterbury Board of Ethics, it shall be a violation of the City's Code of Ordinances, for any Public Official, City Employee or Member of a Board or Commission who is participating directly or indirectly in the procurement process as set forth in the City's Code of Ordinances, including those participating in exempt transactions, to become or be the employee of the WDC contracting with the governmental body by whom the Official, Employee, or Board or Commission member is employed or is a member.

29.2 It shall be a material breach of this Contract, and it shall be a violation of the City's Code of Ordinances for the WDC to offer, give, or agree to give any current or former Public Official, Employee or Member of a Board or Commission, or for such current or former Public Official, Employee or Member of a Board or Commission to solicit, demand, accept or agree to accept from the WDC, a gratuity or an offer of

employment in connection with any: decision; approval; disapproval; recommendation; preparation of any part of a Project requirement or a requisition; influencing the content of any specification or procurement standard; or rendering of advice, investigation, auditing, or in any other advisory capacity in any proceeding or application, request for ruling, determination, claim or controversy, or other particular matter, pertaining to any Project requirement or a Contract or Purchase Order, or to any solicitation or proposal therefore.

29.3 It shall be a material breach of this Contract and it shall be a violation of the City's Code of Ordinances for any payment, gratuity, or offer of employment to be made as an inducement for the award of a subcontract or order, by or on behalf of a subcontractor, the prime consultant/vendor or higher tier subcontractor or any person associated therewith, under a Contract or Purchase Order to the City.

29.4 The value of anything transferred or received in violation of the City's Charter, Code of Ordinances, and/or regulations promulgated there under, by the WDC subject to said Charter and/or Ordinances may be recovered by the City.

29.5 Upon a showing that a subcontractor made a kickback to the City, a prime consultant/vendor or a higher tier subcontractor in connection with the award of a subcontract or order there under, it shall be conclusively presumed that the amount thereof was included in the price of the subcontract or order and ultimately borne by the City and will be recoverable hereunder from the recipient. In addition, said value may also be recovered from the subcontractor making such kickbacks. Recovery from one offending party shall not preclude recovery from other offending parties.

29.6 It shall be a material breach of this Contract and it shall be a violation of the City's Code of Ordinances for the WDC to be retained, or to retain a person, to solicit or secure a contract with the City upon an agreement or understanding for a commission, percentage, brokerage, or contingent fee; and the WDC, before being awarded a City Contract, shall deliver to the City, on a City authored form, a representation that the WDC has not retained anyone in violation of this subsection, the failure to deliver said form being a material breach of this Contract and a violation of the City's Code of Ordinances. Note, however, this subsection shall not apply to full-time Employees who, as a condition of their employment, may be entitled to bonuses or other fees in accordance with their employment relationship.

29.7 The WDC hereby expressly represents that it has complied with those sections of the City's Code of Ordinances requiring that it has (1) delivered to the City an affidavit, on a City authored form, stating that the WDC and its affiliates have no delinquent taxes or other financial obligations owned to the City; (2) filed the City authored financial disclosure statement form as set forth in the City's Code of Ordinances regarding disclosure of financial interests; (3) delivered to the City a written acknowledgement, on a City authored form, evidencing receipt of a copy of the "Ethics and Conflict of Interest" ordinance for the City of Waterbury and hereby expressly represents that the WDC is in full compliance with the entirety of said Code of

Ordinances; and (4) filed a current list of all taxable personal and real property as required by the State of Connecticut General Statutes. Any violation of this subsection shall be deemed a material breach of this Contract and shall be a violation of the City's Code of Ordinances.

29.8 INTEREST OF CITY OFFICIALS. No member of the governing body of the City, and no other officer, employee, or agent of the City, who exercises any functions or responsibilities in connection with the carrying out of the project to which this agreement pertains, shall have any personal interest, direct or indirect, in this Agreement.

29.9 PROHIBITION AGAINST CONTINGENCY FEES. The Contractor hereby represents that it has not retained anyone to solicit or secure a contract with the City upon an agreement or understanding for a commission, percentage, brokerage or contingency fee.

29.10 FREEDOM OF INFORMATION ACT NOTICE. Pursuant to State statute, in the event the total compensation payable to the WDC set forth in Section 6 herein is greater than $2,500,000.00, the City is entitled to receive a copy of any and all WDC records and files related to the performance of this contract and those records and files are subject to the Freedom of Information Act ("the Act") and may be disclosed by the City pursuant to the Act.

30. CITY AND WDC DESIGNEES:

30.1 City Designee: The person in charge of administering the services described in this Agreement on behalf of the City ("City Representative") shall be the Mayor and/or his designee as set forth in writing to the WDC.

30.2 WDC Designee: The person responsible for the services to be performed by the WDC as described in this Agreement ("WDC Representative") shall be the Project Manager and the Chief Executive Officer of the WDC or any other individual authorized in writing by the City.

(End of text, signatures to follow)

IN WITNESS WHEREOF, the parties hereto execute this agreement on the dates signed below.

WITNESS:

Andrea Martelli

Patricia Hueson

CITY OF WATERBURY

By: _____
Neil M. O'Leary, Mayor

Date: 1/12/14

APPROVED AS TO FORM

Attorney, Corporation Counsel's Office

WITNESS:

Andrea Martelli

WATERBURY DEVELOPMENT CORPORATION

By: Todd M. Montello
Todd M. Montello, CEO
duly authorized

Date: 12 February 2014

ADDENDA

ADDENDUM A -	CDBG Program Statement of Work; Specific CDBG Certifications
ADDENDUM B -	HOME Program Statement of Work; Specific HOME Certifications
ADDENDUM C - Certifications	Emergency Solutions Grant Statement of Work; ESG
ADDENDUM D -	Project Management Scope of Services

ADDENDUM "A"
CDBG PROGRAM

I. STATEMENT OF WORK.

A. WDC Responsibilities. The WDC shall:

1. Administer all aspects of the CDBG Program for the City in a manner satisfactory to the City and to HUD and consistent with any and all relevant Federal, State, and City standards required by the City and/or by HUD as a condition of providing these funds;

2. Prepare and comply with Citizen Participation Schedule by reviewing all funding requests with the Citizen Advisory Committee;

3. Host all required public hearings;

4. Prepare the five-year Consolidated Plan along with the annual Plan for each program year of the five years of the Consolidated Plan in accordance with HUD regulations as set forth in 24 C.F.R. §91.200, et seq. (The principal components of the Consolidated/Annual Plan consist of an assessment of the community's affordable housing needs, non-housing needs, economic development, neighborhood facilities/infrastructure improvements, and supportive social services);

5. Meet the national objectives guiding the grants and the local use of the funds therefrom, principally to benefit low and moderate-income persons by providing decent housing and fostering a suitable living environment;

6. Publicize the consolidated Plan/Annual Plan, acquiring all required City board/commission approvals, the oversight board approval and submit the plan to HUD yearly for approval;

7. Prepare, in conjunction with the Consolidated/Annual Plan, the Environmental Review Record along with the Request for Release of Funds for all projects in the Consolidated Annual Plan;

8. Upon all funding acceptance and receipt, plan, review and administer all proposed projects. (Funds will be deposited with the City and subsequently transferred to the WDC);

9. Comply with all timeliness, procurement requirements, monitoring and Davis Bacon Wage requirements, when applicable for all proposed projects;

10. File all required reports to HUD regarding funding and project compliance (e.g. IDIS, Labor Reports, MBE reporting, and the ESG Bi-Annual report);

11. At the completion of each program year for the five-year Consolidated Plan, prepare, review and submit the Consolidated Annual Performance and Evaluation Report (CAPER); and

12. Undertake, conduct and perform any and all such other actions, function and/or activities which may be necessary or required to implement and comply with Federal, State and local law and HUD or State regulations relating to the CDBG Program.

B. City of Waterbury Responsibilities. The City shall:

1. Remain primarily responsible to HUD for the grants and programs provided under the Funding Approval/Agreements by and between the City and HUD;

2. Through the Office of the Mayor, prioritize the goals for expenditure of CDBG funds;

3. On a regular basis as required by Federal regulations, oversee and monitor the WDC operations and implementation of the HUD grants and programs;

4. Maintain oversight and control of the approval process for payments and disbursements of such payments as needed by the WDC; and

5. Designate and provide City personnel responsible for such oversight and monitoring, whose services relative to such monitoring shall be paid for from grant funds, as allowable.

II. RECORDS AND REPORTS.

A. Documentation and Record-Keeping.

1. **Records to be Maintained.** The WDC shall maintain all records (i) required by the Federal regulations specified in such regulations as are pertinent to the grants, programs and/or activities to be funded under this Agreement, and (ii) records specified herein. Such records shall include, but not be limited to:

a. Records providing a full description of each activity undertaken;;
b. Records on matching funds, if applicable;
c. Records demonstrating that each activity undertaken meets the objectives of the pertinent grant or program;

d. Records required to determine the eligibility of activities;
e. Records required to document the acquisition, improvement, use or disposition of real property acquired or improved with grant program funds;
f. records documenting compliance with the fair housing and equal opportunity components of the pertinent grant or program; and
g. All other records necessary to document funding and project compliance with relevant law as set forth in Section I.1 hereof.

2. **Retention.** The WDC shall retain all records pertinent to the expenditures incurred under this Agreement for a period of four (4) years after the termination of all activities funded under this Agreement. Records for non-expendable property acquired with funds under this contact shall be retained for four (4) years after final disposition of such property. Records for any displaced person must be kept for four (4) years after he/she has received final payment. Notwithstanding the above, in the event of litigations, claims, audits, negotiations or other actions that involve any of the records cited and that have started before the expiration of the four (4) year period, such records shall be retained until completion of the actions and resolution of all issues, or the expiration of the four (4) year period, whichever occurs later.

3. **Client Data.** The WDC shall maintain client data demonstrating client eligibility for services provided. Such data shall include, but not be limited to, client name, address, income level or other basis for determining eligibility, and description of service provided. Such information shall be made available to the City upon request.

4. **Disclosure.** The WDC understands that client information collected under this Agreement is private and the use or disclosure of such information, when not directly connected with the administration of the City's or WDC's responsibilities with respect to services provided under this Agreement, is prohibited unless prior written consent is obtained from such person receiving service or from a responsible parent/guardian in the case of a minor receiving service or otherwise as required by applicable law.

5. **Property Records.** The WDC shall maintain real property inventory records, which clearly identify properties purchases, improved or sold. Properties retained shall continue to meet eligibility criteria and shall conform to the "changes in use" restrictions specified in applicable regulations. WDC shall further maintain records, which clearly identify any and all personal property and/or fixtures purchased, improved or sold.

6. **Close-Outs.** The WDC's obligation to the City shall not end until all close-out requirements are completed. Activities during this close-out period shall include, but are not limited to, making final payments, disposing or program assets (including the return of all unused materials, equipment, unspent cash advances,

program income balances and accounts receivable to the City), and determine the custodianship of records.

7. **Audits and Inspections.** All WDC records with respect to any matters covered by this Agreement shall be made available to the City, its designee(s) or the Federal Government, at any time during normal business hours, as often as the City deems necessary , to audit, examine, and make excerpts or transcripts of all relevant data. In accordance with applicable regulations and law, the WDC hereby agrees to conduct an annual audit.

THE WDC HEREBY AGREES TO HAVE AN ANNUAL AUDIT CONDUCTED IN ACCORDANCE WITH the "SINGLE AUDIT AMENDMENTS ACT" and the OFFICE OF MANAGEMENT AND BUDGET (OMB) CIRCULAR NO. A-133, titled "AUDITS OF STATE, LOCAL GOVERNMENTS AND NON-PROFIT ORGANIZATIONS" AND SUBMIT A COPY OF THIS AUDIT TO THE CITY WITHIN THIRTY (30) DAYS OF COMPLETION OF SAID AUDIT.

Any deficiencies noted in any audit report(s) shall be fully cleared and remedied by the WDC within thirty (30) calendar days of the City's receipt of such audit report.

Failure of the WDC to comply with this subsection shall be deemed a material breach of this Agreement.

8. **Financial Statements.** WDC shall provide City with audited financial statements for the most recent tax year prior to the start date specified in Section II above, if applicable.

9. **Employee Verification.** All WDC records with respect to WDC employees, including, but not limited to (i) time sheets, (ii) payroll, (iii) cancelled checks, (iv) etc., shall be made available to the City at any time during normal City business hours. The City shall be entitled to interview WDC employees to verify employment information at any time during the WDC's normal business hours as often as City deems necessary.

III. PROGRAM INCOME.

A. Program Income. The WDC shall promptly remit any and all program income, if any, to the City.

IV. UNIFORM ADMINISTRATIVE REQUIRMENTS. WDC shall comply with applicable uniform administrative requirements, as described in 24 C.F.R. §570.502.

V. OTHER PROGRAM REQUIREMENTS. WDC shall carry out each activity in compliance with all Federal laws and regulations described in 24 C.F.R. Part 570, Subpart K, except that:

A. The WDC does not assume the City's environmental responsibilities described at 24 C.F.R. §570.604; and

B. The WDC does not assume the City's responsibility for initiating the review process under the provisions of 24 C.F.R. Part 52.

VI. SUSPENSION AND TERMINATION. In accordance with 24 C.F.R. §85.43, suspension or termination may occur if the WDC materially fails to comply with any term of the award, and that the award may be terminated for convenience in accordance with 24 C.F.R. §85.44.

VII. REVERSION OF ASSETS. Upon the expiration of this Agreement by termination or otherwise, the WDC shall transfer to the City any CDBG funds on hand at the time of expiration and any accounts receivable attributable to the use of CDBG funds. Further, any real property under the WDC control that was acquired or improved in whole or in part with CDBG funds (including CDBG funds provided to the WDC in the form of a loan) in excess of $25,000.00 shall either:

A. Be used to meet on of the national objectives in 24 C.F.R. §570.208 (formerly §570.901) until five years after expiration of the agreement, or for such longer period of time as determined to be appropriate by the City; or

B. If the WDC determines, after consultation with any affected citizens, that it is appropriate to change the use of the property to a use which does not qualify under Paragraph VII A of this section it may retain or dispose of the property for the changed use if the CDBG program is reimbursed in the amount of the current fair market value of the property, less any portion of the value attributable to expenditures of non-CDBG funds for acquisition of, and improvement to, the property. If the change of use occurs after closeout, the provisions governing income from the disposition of the real property in 24 C.F.R. §570.504(b)(4) and (5), as applicable, shall apply to the use of funds reimbursed. Following the reimbursement of the CDBG program in accordance with the Paragraph VII B hereof, the property no longer will be subject to any CDBG requirements.

ADDENDUM "B"
HOME PROGRAM

I. STATEMENT OF THE WORK.

A. WDC Responsibilities. The WDC shall:

1. Administer all aspects of the HOME Program for the City in a manner satisfactory to the City and to HUD and consistent with any and all relevant Federal, State, and City standards required by the City and/or by HUD as a condition of providing these funds;

2. Prepare and comply with the Citizen Participation Schedule by reviewing all line item allocations with the Citizen Advisory Committee;

3. Host all required public hearings;

4. Prepare the five-year Consolidated Plan along with the Annual Plan for each program year of the five years of the Consolidated Plan in accordance with HUD regulations as set forth in 24 C.F.R. §91.200, et seq. (The principal components of the Consolidated/Annual Plan consist of an assessment of the community's affordable housing needs, non-housing needs, economic development, neighborhood facilities/infrastructure improvements, and supportive social services);

5. Meet the national objectives guiding the grants and the local use of the funds therefrom, principally to benefit low and moderate-income persons by providing decent housing and fostering a suitable living environment;

6. Publicize the Consolidated Plan/Annual Plan, acquiring all required City board/commission approvals, the oversight board approval and submit the plan to HUD yearly for approval;

7. Prepare, in conjunction with the Consolidated/Annual Plan, the Environmental Review Record along with the Request for Release of Funds for all projects in the Consolidated Annual Plan;

8. Upon all funding acceptance and receipt, plan, review and administer all proposed projects. (Funds will be deposited with the City and subsequently transferred to the WDC);

9. Comply with all timelines, procurement requirements, monitoring and Davis Bacon Wage requirements, when applicable for all proposed projects;

10. File all required reports to HUD regarding funding and project compliance (e.g. IDIS, Labor Reports, MBE reporting, and the ESG Bi-Annual Report);

11. At the completion of each program year for the five-year Consolidated Plan, prepare, review and submit the Home Annual Performance Report; and

12. Undertake, conduct and perform any and all such other actions, functions and/or activities which may be necessary or required to implement and comply with Federal, State and local law and HUD or State regulations relating to the HOME program.

B. City of Waterbury Responsibilities. The City shall:

1. Remain primarily responsible to HUD for the grants and programs provided under the Funding Approval/Agreements by and between the City and HUD;

2. On a regular basis as required by Federal regulations, oversee and monitor the WDC operations and implementation of the HUD grants and programs;

3. Maintain oversight and control of the approval process for payments and disbursement of such payments as needed by the WDC; and

4. Designate and provide City personnel responsible for such oversight and monitoring.

II. PROGRAM INCOME.

A. Program Income. The WDC shall promptly remit any and all program income, if any, to the City.

III. UNIFORM ADMINISTRATIVE REQUIREMENTS. WDC shall comply with applicable uniform administrative requirements, as describe in 24 C.F.R. §92.505.

IV. OTHER PROGRAM REQUIREMENTS. WDC shall carry out each activity in compliance with all Federal laws and regulations described in 24 C.R.F. Part 92, Subpart H, except that:

A. The WDC does not assume the City's responsibilities for environmental review under 24 C.F.R. §92.352; and

B. The intergovernmental review process in 24 C.F.R. §92.357 does not apply.

V. AFFIRMATIVE MARKETING. If the HOME funds administered by the WDC are used for housing containing five or more assisted units, WDC shall comply with the affirmative marketing responsibilities set forth in 24 C.F.R. §92.351.

VI. REQUESTS FOR DISBURSEMENT OF FUNDS. WDC may not request disbursement of funds under this agreement until the funds are needed for payment of eligible costs. The amount of each request must be limited to the amount needed.

VII. REVERSION OF ASSETS. Upon the expiration of this Agreement by termination or otherwise, the WDC shall transfer to the City and HOME funds on hand at the time of expiration and any accounts receivable attributable to the use of HOME funds.

VIII. RECORDS AND REPORTS.

A. Documentation and Record-Keeping.

1. **Records to be Maintained.** The WDC shall maintain all records (i) required by the Federal regulations specified in such regulations as are pertinent to the grants, programs and/or activities to be funded under this Agreement, and (ii) records specified herein. Such records shall include, but not be limited to:

a. Records providing a full description of each activity undertaken;;
b. Records on matching funds, if applicable;
c. Records demonstrating that each activity undertaken meets the objectives of the pertinent grant or program;
d. Records required to determine the eligibility of activities;
e. Records required to document the acquisition, improvement, use or disposition of real property acquired or improved with grant program funds;
f. records documenting compliance with the fair housing and equal opportunity components of the pertinent grant or program; and
g. All other records necessary to document funding and project compliance with relevant law as set forth in Section I.1 hereof.

2. **Retention.** The WDC shall retain all records pertinent to the expenditures incurred under this Agreement for a period of four (4) years after the termination of all activities funded under this Agreement. Records for non-expendable property acquired with funds under this contact shall be retained for four (4) years after final disposition of such property. Records for any displaced person must be kept for four (4) years after he/she has received final payment. Notwithstanding the above, in the event of litigations, claims, audits, negotiations or other actions that involve any of the records cited and that have started before the expiration of the four (4) year period, such records shall be retained until completion of the actions and resolution of all issues, or the expiration of the four (4) year period, whichever occurs later.

3. **Client Data.** The WDC shall maintain client data demonstrating client eligibility for services provided. Such data shall include, but not be limited to, client name, address, income level or other basis for determining eligibility, and description of service provided. Such information shall be made available to the City upon request.

4. **Disclosure.** The WDC understands that client information collected under this Agreement is private and the use or disclosure of such information, when not directly connected with the administration of the City's or WDC's responsibilities with respect to services provided under this Agreement, is prohibited unless prior written consent is obtained from such person receiving service or from a responsible parent/guardian in the case of a minor receiving service or otherwise as required by applicable law.

5. **Property Records.** The WDC shall maintain real property inventory records, which clearly identify properties purchases, improved or sold. Properties retained shall continue to meet eligibility criteria and shall conform to the "changes in use" restrictions specified in applicable regulations. WDC shall further maintain records, which clearly identify any and all personal property and/or fixtures purchased, improved or sold.

6. **Close-Outs.** The WDC's obligation to the City shall not end until all close-out requirements are completed. Activities during this close-out period shall include, but are not limited to, making final payments, disposing or program assets (including the return of all unused materials, equipment, unspent cash advances, program income balances and accounts receivable to the City), and determine the custodianship of records.

7. **Audits and Inspections.** All WDC records with respect to any matters covered by this Agreement shall be made available to the City, its designee(s) or the Federal Government, at any time during normal business hours, as often as the City deems necessary , to audit, examine, and make excerpts or transcripts of all relevant data. In accordance with applicable regulations and law, the WDC hereby agrees to conduct an annual audit.

THE WDC HEREBY AGREES TO HAVE AN ANNUAL AUDIT CONDUCTED IN ACCORDANCE WITH the "SINGLE AUDIT AMENDMENTS ACT" and the OFFICE OF MANAGEMENT AND BUDGET (OMB) CIRCULAR NO. A-133, titled "AUDITS OF STATE, LOCAL GOVERNMENTS AND NON-PROFIT ORGANIZATIONS" AND SUBMIT A COPY OF THIS AUDIT TO THE CITY WITHIN THIRTY (30) DAYS OF COMPLETION OF SAID AUDIT.

Any deficiencies noted in any audit report(s) shall be fully cleared and remedied by the WDC within thirty (30) calendar days of the City's receipt of such audit report.

Failure of the WDC to comply with this subsection shall be deemed a material breach of this Agreement.

8. **Financial Statements.** WDC shall provide City with audited financial statements for the most recent tax year prior to the start date specified in Section II above, if applicable.

9. **Employee Verification.** All WDC records with respect to WDC employees, including, but not limited to (i) time sheets, (ii) payroll, (iii) cancelled checks, (iv) etc., shall be made available to the City at any time during normal City business hours. The City shall be entitled to interview WDC employees to verify employment information at any time during the WDC's normal business hours as often as City deems necessary.

IX. ENFORCEMENT OF THE AGREEMENT. In accordance with 24 C.F.R. §85.43, suspension or termination may occur if the WDC materially fails to comply with any term of this agreement, and further, this agreement may be terminated for convenience in accordance with 24 C.F.R. §85.44.

X. WRITTEN AGREEMENTS. If the WDC provides HOME funds to for-profit owners or developers, nonprofit owners or developers, sub-recipient, homeowners, home-buyers, tenants receiving tenant-based rental assistance or contractors, the WDC must have a written agreement which meets the requirements of 24 C.F.R. §92.504.

ADDENDUM "C"
EMERGENCY SOLUTIONS GRANTS

I. STATEMENT OF THE WORK.

A. WDC Responsibilities. The WDC shall:

1. Administer all aspects of the ESG Program for the City in a manner satisfactory to the City and to HUD and consistent with any and all relevant Federal, State and City standards required by the City and/or by HUD as a condition of providing these funds;

2. Prepare and comply with the Citizen Participation Schedule by reviewing all funding requests with the Citizen Advisory Committee;

3. Host all required public hearings;

4. Prepare the five-year Consolidated Plan along with the Annual Plan for each program year of the five year of the Consolidated Plan in accordance with HUD regulations as set forth in 24 C.F.R. §91.200, et seq. (The principal components of the Consolidated/Annual Plan consist of an assessment of the community's affordable housing needs, non-housing needs, economic development, neighborhood facilities/infrastructure improvements, and supportive social services);

5. Meet the national objectives guiding the grants and the local use of the funds therefrom, principally to benefit low and moderate-income persons by providing decent housing and fostering a suitable living environment;

6. Publicize the Consolidated Plan/Annual Plan, acquiring all required City board/commission approvals, the oversight board approval and submit the plan to HUD yearly for approval;

7. Prepare, in conjunction with the Consolidated/Annual Plan, the Environmental Review Record along with the Request for Release of Funds for all projects in the Consolidated Annual Plan;

8. Upon all funding and receipt, plan, review and administer all proposed projects. (Funds will be deposited with the City and subsequently transferred to the WDC);

9. Comply with all timeliness, procurement requirements, monitoring and Davis Bacon Wage requirements, when applicable for all proposed projects;

10. File all required reports to HUD regarding funding and project compliance (e.g. IDIS, Labor Reports, MBE reporting, and the ESG Bi-Annual Report);

11. At the completion of each program year for the five-year Consolidated Plan, prepare, review and submit the Consolidated Annual Performance and Evaluation Report (CAPER); and

12. Undertake, conduct and perform any and all such other actions, functions and/or activities which may be necessary or required to implement and comply with Federal, State and local law and HUD or State regulations relating to the ESG Program.

B. City of Waterbury Responsibilities. The City shall:

1. Remain primarily responsible to HUD for the grants and programs provided under the Funding Approval/Agreements by and between the City and HUD;

2. On a regular basis as required by Federal regulations, oversee and monitor the WDC operations and implementation of the HUD grants and programs;

3. Maintain oversight and control of the approval process for payments and disbursement of such payments as needed by the WDC; and

4. Designate and provide City personnel responsible for such oversight and monitoring.

II. PROGRAM INCOME.

A. Program Income. The WDC shall promptly remit any and all program income, if any, to the City.

III. REQUESTS FOR DISBURSEMENT OF FUNDS. WDC may not request disbursement of funds under this agreement until the funds are needed for payment of eligible costs. The amount of each request must be limited to the amount needed.

IV. REVERSION OF ASSETS. Upon the expiration of this Agreement by termination or otherwise, the WDC shall transfer to the City any ESG funds on hand at the time of expiration and any accounts receivable attributable to the use of ESG funds.

V. RECORDS AND REPORTS.

A. Documentation and Record-Keeping.

1. **Records to be Maintained.** The WDC shall maintain all records (i) required by the Federal regulations specified in such regulations as are pertinent to the grants, programs and/or activities to be funded under this Agreement, and (ii) records specified herein. Such records shall include, but not be limited to:

a. Records providing a full description of each activity undertaken;;
b. Records on matching funds, if applicable;
c. Records demonstrating that each activity undertaken meets the objectives of the pertinent grant or program;
d. Records required to determine the eligibility of activities;
e. Records required to document the acquisition, improvement, use or disposition of real property acquired or improved with grant program funds;
f. records documenting compliance with the fair housing and equal opportunity components of the pertinent grant or program; and
g. All other records necessary to document funding and project compliance with relevant law as set forth in Section I.1 hereof.

2. **Retention.** The WDC shall retain all records pertinent to the expenditures incurred under this Agreement for a period of four (4) years after the termination of all activities funded under this Agreement. Records for non-expendable property acquired with funds under this contact shall be retained for four (4) years after final disposition of such property. Records for any displaced person must be kept for four (4) years after he/she has received final payment. Notwithstanding the above, in the event of litigations, claims, audits, negotiations or other actions that involve any of the records cited and that have started before the expiration of the four (4) year period, such records shall be retained until completion of the actions and resolution of all issues, or the expiration of the four (4) year period, whichever occurs later.

3. **Client Data.** The WDC shall maintain client data demonstrating client eligibility for services provided. Such data shall include, but not be limited to, client name, address, income level or other basis for determining eligibility, and description of service provided. Such information shall be made available to the City upon request.

4. **Disclosure.** The WDC understands that client information collected under this Agreement is private and the use or disclosure of such information, when not directly connected with the administration of the City's or WDC's responsibilities with respect to services provided under this Agreement, is prohibited unless prior written consent is obtained from such person receiving service or from a responsible parent/guardian in the case of a minor receiving service or otherwise as required by applicable law.

5. **Property Records.** The WDC shall maintain real property inventory records, which clearly identify properties purchases, improved or sold. Properties retained shall continue to meet eligibility criteria and shall conform to the "changes in use" restrictions specified in applicable regulations. WDC shall further maintain records, which clearly identify any and all personal property and/or fixtures purchased, improved or sold.

6. **Close-Outs.** The WDC's obligation to the City shall not end until all close-out requirements are completed. Activities during this close-out period shall include, but are not limited to, making final payments, disposing or program assets (including the return of all unused materials, equipment, unspent cash advances, program income balances and accounts receivable to the City), and determine the custodianship of records.

7. **Audits and Inspections.** All WDC records with respect to any matters covered by this Agreement shall be made available to the City, its designee(s) or the Federal Government, at any time during normal business hours, as often as the City deems necessary , to audit, examine, and make excerpts or transcripts of all relevant data. In accordance with applicable regulations and law, the WDC hereby agrees to conduct an annual audit.

THE WDC HEREBY AGREES TO HAVE AN ANNUAL AUDIT CONDUCTED IN ACCORDANCE WITH the "SINGLE AUDIT AMENDMENTS ACT" and the OFFICE OF MANAGEMENT AND BUDGET (OMB) CIRCULAR NO. A-133, titled "AUDITS OF STATE, LOCAL GOVERNMENTS AND NON-PROFIT ORGANIZATIONS" AND SUBMIT A COPY OF THIS AUDIT TO THE CITY WITHIN THIRTY (30) DAYS OF COMPLETION OF SAID AUDIT.

Any deficiencies noted in any audit report(s) shall be fully cleared and remedied by the WDC within thirty (30) calendar days of the City's receipt of such audit report.

Failure of the WDC to comply with this subsection shall be deemed a material breach of this Agreement.

8. **Financial Statements.** WDC shall provide City with audited financial statements for the most recent tax year prior to the start date specified in Section II above, if applicable.

9. **Employee Verification.** All WDC records with respect to WDC employees, including, but not limited to (i) time sheets, (ii) payroll, (iii) cancelled checks, (iv) etc., shall be made available to the City at any time during normal City business hours. The City shall be entitled to interview WDC employees to verify

employment information at any time during the WDC's normal business hours as often as City deems necessary.

VI. ENFORCEMENT OF THE AGREEMENT. In accordance with 24 C.F.R. §85.43, suspension or termination may occur if the WDC materially fails to comply with any term of this agreement, and further, this agreement may be terminated for convenience in accordance with 24 C.F.R. §85.44.

VII. WRITTEN AGREEMENTS. If the WDC provides HOME funds to for-profit owners or developers, nonprofit owners or developers, sub-recipient, homeowners, home-buyers, tenants receiving tenant-based rental assistance or contractors, the WDC must have a written agreement which meets the requirements of 24 C.F.R. §92.504.

ADDENDUM "D"
Project Management Scope of Services

1. **Scope of Services.**

A. The WDC shall furnish all of the labor, services, reports, plans, specifications necessary for completion of the Designated Project or Designated Program as specified in a PAL and such shall be completed in a satisfactory manner, as reasonably determined by the City.

B. The WDC will provide such services through the WDC's Administrative and Project Management staff. Where the City determines that additional onsite support staff is required to address City priorities, the WDC will prepare a revised staffing proposal and obtain City approval prior to incurring costs or assigning additional staff. The WDC shall make such revisions or modifications to a PAL as may be required by the City. Revisions or modifications to a PAL required as a result of an error by the WDC will be done at the WDC's sole cost and expense.

C. The WDC shall designate a Project Manager for each Designated Project or Designated Program as the contact person between the City, Mayor's Office, Mayor's Office Staff, City Boards and WDC. The Project Manager shall perform all day to day operations, on site coordination, and decision making with regards to the project. Attendance at Board or Commission meetings or otherwise shall be by the Project Manager, or the CEO of WDC unless another individual is authorized by the City to do so.

D. In performing the services required under this Agreement, the WDC shall consult with the City's designee, as hereinafter set forth, and shall meet, as appropriate, and as directed by the City, with other City employees or officials and with other persons or entities, as necessary, including State and Federal officials and/or neighborhood groups or organizations.

2. **WDC Representations Regarding Qualification and Accreditation.** The WDC represents that, to the extent required by law, its employees are licensed to perform the Work set forth in this Agreement. The WDC further represents that its employees have the requisite skill, expertise and knowledge reasonably necessary to perform the Work required under the terms each PAL, including any supplementary work, and acknowledges that the City relies upon these representations.

A. Representations regarding Personnel. The WDC represents that it has, or will secure at its own expense, all personnel required to perform the services under this agreement. Such personnel shall not be employees of or have any

contractual relationship with the City, unless use of City employees or of personnel having a contractual relationship with the City is approved by the City in writing. As set forth above or unless otherwise provided, all the services required hereunder shall be performed by the WDC under its supervision and all personnel engaged in the work shall be fully qualified and shall be authorized or permitted under state or local law to perform such services.

B. Representations regarding Qualifications. The WDC hereby represents that, to the extent required by Federal, State and Local statutes, regulations, codes, ordinances, and policies, the WDC and/or its employees are licensed, certified, registered, or otherwise qualified, and that the WDC and all employees providing services under this Agreement, are in full compliance with those statutes, regulations and ordinances. Upon City request, the WDC shall provide to the City a copy of the WDC's and/or its employees' licenses, certifications, registrations, etc.

3. **Responsibilities of the WDC.** All data, information, etc. given by the City to the WDC and/or created by the WDC shall be treated by the WDC as proprietary to the City and confidential, unless the City agrees in writing to the contrary, and shall be used solely for the purposes of providing services under this agreement. The WDC agrees to forever hold in confidence all files, records, documents and other information, which may come into the WDC's possession during the term of this agreement, except where a disclosure is expressly stated as a requirement of this agreement. Notwithstanding the foregoing, where a WDC disclosure is required to comply with statute, regulation, or court order, the WDC shall provide prior advance written notice to the City of the need for such disclosure. The WDC agrees to properly implement the services required in the manner herein provided. If a request under the Freedom of Information Act is made to the WDC for information which is rendered by this Agreement as confidential or proprietary to the City, the WDC shall notify the City of the request, and the City thereafter shall be responsible for responding, with the cooperation of the WDC.

A. Use of City Property. To the extent the WDC is required to be on City property to render its services hereunder, the WDC shall have access to such areas of City property as the City and the WDC agree are necessary for the performance of the WDC's services under this agreement (the "Site" or the "Premises") and at such times as the City and the WDC may mutually agree. The WDC shall perform all work in full compliance with Local, State and Federal health and safety regulations. All work hereunder shall be performed in a safe manner. The WDC shall immediately correct any dangerous condition caused by or resulting from its Work. If it fails to correct, or to act diligently to correct, any condition which the City reasonably believes to be a hazard to persons or property, then immediately upon oral or written notice to any supervisory or similar personnel of the WDC, the City may, but shall not be required to, correct same at the WDC's expense. The City shall confirm in writing any oral notice given within two (2) days thereafter.

B. Working Hours. To the extent the WDC is required to be on City property to render its services hereunder, the WDC shall coordinate its schedule so that work on the Premises is performed during those hours the City sets forth in a written notice to the WDC, unless written permission is obtained from the City to work during other times. This condition shall not excuse the WDC from timely performance under the Contract. The work schedule must be agreed upon by the City and the WDC.

C. Cleaning Up. To the extent the WDC is required to be on City property to render its services hereunder, the WDC shall at all times keep the premises free from accumulation of waste materials or rubbish caused by the WDC, its employees or subcontractors, and at the completion of the work shall remove all rubbish from and about the project and all tools, scaffolding and surplus materials and shall leave the Premises "broom clean" or its equivalent, unless more exactly specified. In case of dispute, the City may remove the rubbish and charge the cost to the WDC.

D. Publicity. The WDC agrees not to deliberately disclose the fact that the City has terminated this agreement or disclose any of the terms of the agreement or use the City's name in connection with any publicity, unless the City gives prior written consent to such use of the City's name in each instance.

E. Standard of Performance. All workmanship, services, materials or equipment provided by WDC to complete a PAL, either at the Premises or intended for it, shall conform in all respects with the requirements of the applicable PAL, and shall be the best obtainable from the crafts and trades within the constraints of the PAL budget. In all cases, the services, materials, equipment, reports, plans, specifications, deliverables, workmanship, etc. shall be equal to or better than the grade specified. The standard of care and skill for all services performed by the WDC shall be that standard of care and skill ordinarily used by other members of the WDC's profession practicing under the same or similar conditions at the same time and in the same locality. The WDC's services rendered hereunder shall be rendered completely and by qualified personnel in accordance with standard industry practice.

F. Due Diligence Obligation. The WDC acknowledges its responsibilities to examine and to be thoroughly familiar with the Project and the Program Management Scope of Services, as set forth herein and each individual PAL Agreement. The WDC agrees it will perform commercially reasonable investigation of the physical items, facilities, services or functions essential to the satisfactory performance of each PAL that may be entered into pursuant to this Agreement ("Due Diligence") and hereby certifies that all such items, facilities, services or functions are included in this agreement and hereby warrants that:

(1) It will conduct Due Diligence and, accordingly, any additional costs, services or products resulting solely from the failure of the WDC to complete Due Diligence that is commercially reasonable under the nature or circumstances of a PAL shall be borne by the WDC.

(2) Its failure or omission to make investigation and verification of data shall, in no way, be cause for future claim of ignorance of such data or conditions nor shall such failure to investigate and verify be the basis for any claim whatsoever, monetary or otherwise, other than those that are not reasonably foreseeable;

(3) It is solely responsible for resolving any issues resulting from the failure to conduct Due Diligence that is commercially reasonable under the nature and or circumstances and shall assume any costs that may result during the implementation of a PAL, including, but not limited to, adherence to specifications and pricing for the Project.

(4) It is responsible for specifying any changes and disclosing any new costs. Thus, in the event any changes or costs are disclosed by the WDC, or otherwise required, during the performance of its services, the sole responsibility for any modification, delay and cost of such changes shall reside with the WDC.

(5) It will familiarize itself with the nature and extent of the Contract Documents, work anticipated by a PAL, the locality, and with all local conditions and Federal, State and Local laws, ordinances, rules and regulations that in any manner may affect cost, progress or performance of the Work;

(6) It will give the City written notice of any conflict, error or discrepancy that the WDC discovers in the documents; and

G. Reporting Requirement. The WDC shall deliver written reports upon request to the City setting forth (i) the issue date of the report, (ii) the time period covered by the report, (iii) a brief description of the work and services completed by the WDC and/or delivered by the WDC during the time period covered by the report, (iv) the WDC's declaration as to whether the entirety of the WDC's work and services required in this Agreement will be, or will not be, completed within the contract's Section 6 total compensation amount, and (v) any and all additional useful and/or relevant information. Each report shall be signed by the WDC's Chief Executive Officer.

NOTE, the WDC's failure to deliver any report required herein shall be deemed a material breach of this contract, the City hereby reserving the right to exercise all available legal remedy(ies) to address said breach.

4. **Responsibilities of the City.** Upon the City's receipt of WDC's written request, the City will provide the WDC with all documents, data and other materials reasonably necessary and appropriate to the work to be performed by the WDC under a PAL and the City will endeavor to secure, where feasible and where the City agrees it is necessary and appropriate, materials or information from other sources requested by the WDC for the purpose of carrying out the services under a PAL. The City acknowledges that the Work is advisory and collaborative in nature, that the City is responsible for the timely making of final decisions required by Exhibit B, and that completion of the work contemplated by a PAL requires reasonable cooperation from the City.

EXHIBITS

EXHIBIT A - City Ordinances
§31.269 – WDC Designation of Authority
§38.020-38.071 – Solicitation and Award Methods of Source Selection
§34.15-34.22 – Hiring of Waterbury Residents on Certain Publicly-Funded Construction Projects and as further amended from time-to-time

EXHIBIT B - U.S. Department of Housing and Urban Development
SF 424 – Certifications

EXHIBIT C - CFR Procurement Requirements
24 C.F.R. §84.40 – 84.48

EXHIBIT D - List of Current WDC Projects

EXHIBIT "A"

§31.269 – WDC Designation of Authority

§38.020-38.071 – Solicitation and Award Methods of Source Selection

§34.15-34.22 – Hiring of Waterbury Residents on Certain Publicly-Funded Construction Projects and as further amended from time-to-time

responsible for the day-to-day operation of the WDC and shall see that all actions of the Board are carried into effect.

(B) The CEO shall be knowledgeable regarding municipal economic development and housing matters and shall be hired upon specifications and qualifications set by the Board.

(C) The CEO shall, subject to the by-laws of the WDC, hire employees, staff and consultants, and purchase good and services and construction necessary for the discharge of the duties of his office and the WDC as the CEO deems necessary and/or advisable within the limits of any sums appropriated for those purposes.

(D) The CEO shall report monthly to the Board on the conduct and management of the affairs of the WDC and shall also perform such other duties as are usual and customary to this office.
(Ord. passed 3-7-2005)

§ 31.268 CONDUCT OF BUSINESS.

(A) The WDC shall keep and maintain a regular place of business within the city, which shall be open for business on a customary business schedule.

(B) The WDC shall, at all times, comply and comport itself in accordance with all applicable laws and regulations, as such may be amended, supplemented or replaced.
(Ord. passed 3-7-2005)

§ 31.269 DESIGNATIONS OF AUTHORITY.

(A) The WDC is hereby designated as the city's:

(1) Development Agency, pursuant to Conn. Gen. Stat. § 8-188;

(2) Implementing Agency, pursuant to Conn. Gen. Stat. § 32-224;

(3) Housing Site Development Agency, pursuant to Conn. Gen. Stat. § 8-216b; and

(4) Community Development Agency, pursuant to Conn. Gen. Stat. § 8-169b(c).

(B) Further, the WDC is authorized and empowered to administer, supervise, implement and control the city's:

(1) Enterprise Zone, pursuant to Conn. Gen. Stat. §§ 32-70 *et seq.* and §§ 152.02 *et seq.* of the city code; and

(2) Information Technology Zone (the "ITZ"), pursuant to Conn. Gen. Stat. § 12-65b.

(C) Other projects.

(1) Notwithstanding the provisions of Chapter 38 of the code of ordinances of the city, whenever requested by the Mayor and approved by resolution of the Board of Aldermen, on a project-by-project basis, the WDC is hereby designated, appointed and authorized to act on behalf of the city in the capacity of general contractor, project manager, construction manager, design builder, owner's representative and/or in such other similar development or construction capacity or capacities as may be designated by the Mayor and the Board of Aldermen, for purposes of city-funded construction and/or rehabilitation projects, thereby enabling the city to utilize the WDC's expertise in project design, development and/or management, without the requirement or necessity of a bid.

(2) Further, when requested by the Mayor and approved by resolutions of the Board of Aldermen and the Waterbury Board of Education, on a project-by-project basis, the WDC is hereby designated, appointed and authorized and may perform in the same capacity or capacities as set forth above for any city school construction and/or rehabilitation project.

(3) In any such project as set forth herein, the WDC shall only be allowed to collect and the city shall only be required to pay for the reasonable administrative and out-of pocket costs and expenses of the WDC's services, without the addition or inclusion of any profit. The WDC shall divulge the total estimated amount of such administrative costs and expenses for each such project to the Mayor, the Board of Aldermen and, when appropriate, the Waterbury Board of Education before such designation, appointment and/or approval is made. In furtherance of the disclosure, the WDC shall retain and make all of its books and records available for inspection by the city or its designee, before and throughout the project and for such period of time after its completion as shall be reasonably required to enable the city to comply with any federal, state and/or local law, ordinance or regulation regarding the auditing of the project.

(4) Any procurement, (as such term is defined in § 38.002 of the code of ordinances of the city) by the WDC in connection with work authorized by this section shall be conducted in accordance with the Centralized Procurement System Ordinance of the city (Chapter 38 of the Code of Ordinances of the city) and be performed by or under the direction and supervision of the City's Director of Purchasing, in his sole discretion.

(D) In accordance with such designations, appointments and authorizations, the WDC shall possess, utilize, exercise and discharge all powers and duties granted to it pursuant to the delineated and associated provisions of the state general statutes and/or the Charter and ordinances of the city, as such may be amended, supplemented or replaced, from time to time, in the best interests of the city. (Ord. passed 3-7-2005)

(3) *Cause for removal or termination of employment.* If any public official or employee of the city shall knowingly incur any obligation or shall authorize or make any expenditure in violation of this provision, the action shall be cause for removal from office or termination of employment.
(Ord. passed 6-20-2005)

§ 38.005 PREPARATION OF SPECIFICATIONS.

(A) *Generally.* In accordance with the schedule or any regulations or policies established by the Director of Purchasing, the using agency shall prepare specifications (including, but not limited to, standard terms and conditions), which shall be attached or included in the bid or proposal documents set forth herein.

(1) *Assistance to the using agencies.* The Director of Purchasing may retain or authorize the retention of expert advisors to assist the using agencies.

(2) *Maximum practicable competition.* All specifications shall seek to promote overall economy for the purposes intended and encourage competition in satisfying the city's needs, and shall not be unduly restrictive.

(3) *Specifications prepared by other than city personnel.* The requirements of this chapter regarding standards established for the specifications shall apply to all specifications prepared by city and non-city personnel, including, but not limited to, those prepared by architects, engineers and designers.

(B) *The role of the Director of Purchasing.* The Director of Purchasing shall monitor use of specifications for commodities, services and construction required by the Department of Purchases. Moreover, the Director of Purchasing, is authorized to issue regulations or policies as a means of setting standards for the preparation, maintenance and content of specifications for commodities, services and construction items required by the city.
(Ord. passed 6-20-2005)

PROCUREMENT PROCESS: SOLICITATION AND AWARD; METHODS OF SOURCE SELECTION

§ 38.020 METHODS OF SOURCE SELECTION.

Unless otherwise authorized by, the Charter of the city or this code, all contracts and purchase orders shall be awarded by one of the following methods:

(A) Competitive sealed bidding as set forth in § 38.021 of this chapter;

(B) Competitive sealed proposals as set forth in § 38.022 of this chapter;

(C) Request for qualifications as set forth in § 38.023 of this chapter. Architectural and engineering services shall be solicited as set forth in § 38.023 of this chapter;

(D) Recurring procurements as set forth in § 38.024 of this chapter;

(E) Small purchases as set forth in § 38.025 of this chapter;

(F) Sole source procurement as set forth in § 38.026 of this chapter;

(G) Emergency procurements as set forth in § 38.027 of this chapter;

(H) Waiver of bid or proposal requirement for extraordinary conditions as set forth in § 38.028 of this chapter;

(I) Exempt services are set forth in § 38.029 of this chapter;

(J) Investments or insurance as set forth in § 38.030 of this chapter; and

(K) Other methods of source selection may be established by regulation as may be promulgated by the Director of Purchasing.
(Ord. passed 6-20-2005)

§ 38.021 COMPETITIVE SEALED BIDDING.

(A) *Conditions for use.* Purchase orders or contracts, in an amount in excess of $10,000, shall be awarded by competitive sealed bidding unless the Director of Purchasing determines that an alternate method of source selection, as set forth herein and the referenced sections therein of this chapter, is appropriate.

(B) *Invitation for bids.* An invitation for bids shall be issued and shall include specifications and any other descriptions of the commodity, and all proposed and/or mandatory contractual terms, special terms and conditions applicable to the procurement, other legal and regulatory requirements, including, but not limited to, the requirements of Chapter 93 of the Code of Ordinances. With respect to any particular invitation for bids, the Director of Purchasing or the Corporation Counsel may vary any clauses that may have, prior thereto, been promulgated by the Department of Purchases for inclusion in all invitation for bids. However, the Director of Purchasing does not have the discretion to vary the specifically enumerated legal requirements of the code of ordinances.

(C) *Public notice.* Adequate public notice of the invitation for bids shall be given a reasonable time period prior to the date set forth therein for the opening of bids and in a manner that the Director of Purchasing determines will maximize public participation and competition in the competitive sealed bidding process.

(1) (a) *Generally.* The notice shall be inserted, at least ten calendar days before the final date of submitting bids, in the major daily newspaper published in the city and may, in the sole discretion of the Director of Purchasing, be posted on the Internet.

(b) *Notice following pre-qualification of bidders.* In the event of a multi-step competitive or sealed bid, the notice may be sent only to the vendors qualified to bid.

(2) (a) Each notice of a planned purchase under this chapter shall indicate the type of commodities or services to be purchased.

(b) The using agency shall provide the Director of Purchasing with special notice requirements necessary to comply with the provisions of federal or state grants, loans or reimbursement agreement, when applicable.

(D) *Bid opening.*

(1) Bids shall be opened publicly at the time and place designated in the invitation for bids. The amount of each bid, and such other relevant information as may be specified by policy adopted by the Director of Purchasing, together with the name of each bidder shall be recorded; the record and each bid shall be open to public inspection.

(2) Each bid shall be kept sealed or secured until opened publicly at the time stated in the notice soliciting the bid.

(E) *Bid acceptance and bid evaluation.* Bids shall be unconditionally accepted without alteration or correction, except as authorized in this chapter. The invitation for bid may set forth the evaluation criteria to be used. No criteria may be used in a bid evaluation that are not set forth in the invitation for bids. In the event there is no specific evaluation criterion set forth in the invitation for bids, evaluation will be based on a determination of the lowest responsible, qualified and responsive bidder as set forth in this chapter.

(1) *Evaluation criteria.* Bids shall be evaluated by the Director of Purchasing, or the using agency and/or consultants if so designated by the Director, based on the requirements set forth in the invitation for bids, which may include criteria to determine acceptability such as inspection, testing, quality, workmanship, delivery and suitability for a particular purpose.

(2) *Objectively measurable criteria.* Those criteria that will affect the bid price and be considered in evaluation for award shall be objectively measurable, such as discounts, transportation costs, and total or life cycle costs.

(F) *Correction or withdrawal of bids; cancellation of awards.* Correction or withdrawal of inadvertently erroneous bids before or after award, or cancellation of awards of contracts or purchase orders based on the bid mistakes, shall be permitted with the approval, in writing, of the Director of Purchasing. The actions of the Director of Purchasing shall take into consideration preservation of the integrity of the competitive sealed bidding process under this chapter.

(1) *Prohibited practices following bid opening.* After bid opening, no changes in bid prices or other provisions of bids prejudicial to the interest of the city or fair competition shall be permitted.

(2) *Written determination regarding cancellation of awards or contracts or purchase orders.* Except as otherwise provided by regulation and/or policy, all decisions to permit the correction or withdrawal of bids, or cancel awards of contracts or purchase orders based on bid mistakes shall be supported by a written determination made by the Director of Purchasing.

(G) *Award.*

(1) *Lowest responsible, qualified and responsive bidder.* The contract or purchase order shall be awarded with reasonable promptness by written notice to the lowest responsible, qualified and responsive bidder whose bid meets the requirements and evaluation criteria, if any, set forth in the invitation for bids, or criteria established by the Director of Purchasing.

(a) In considering past performance of a bidder for the purpose of determining the "lowest responsible, qualified and responsive bidder", the Director of Purchasing shall evaluate the skill, ability and integrity of the bidder in terms of the bidder's fulfillment of past contractual obligations and the bidder's experience or lack of experience in delivering equipment, materials, supplies or contractual services of the size or amount for which bids have been solicited.

(b) The Director of Purchasing may reject any or all bids or parts of bids or bids for any one or more commodities or contractual services, when he shall deem that the public interest will be served.

(2) *Construction project exception: permissible adjustment of the bid price.* Unless otherwise prohibited by federal or state law, regulation or agency requirement, with respect to construction projects only, the Director of Purchasing is authorized to negotiate an adjustment of the bid price, including changes in the bid requirements, with the low responsible and responsive bidder, in order to bring the bid within the amount of available funds, in the event:

(a) All bids for a construction project exceed available funds;

(b) The low responsible and responsive bid does not exceed the funds by more than 10%; and

(c) The time or economic considerations preclude re-solicitation of work of a reduced scope.

(H) *Multi-step competitive sealed bidding.* When it is considered impractical to initially issue an invitation for bid, the Director of Purchasing may issue a request for information or request for proposals (requesting technical information) or request for qualifications (requesting the qualifications of bidders) as the first step(s) in the process, to be followed by an invitation for bids which may be limited to those bidders who have been qualified under the criteria set forth in the first solicitation.
(Ord. passed 6-20-2005)

§ 38.022 COMPETITIVE SEALED PROPOSALS.

(A) *Conditions for use.*

(1) Purchase orders or contracts, in excess of $10,000, may be entered into following the issuance of competitive sealed proposals when the Director of Purchasing determines that the use of competitive sealed bidding is either not practicable or not advantageous to the city. As a general rule, the competitive sealed proposal shall be utilized for services, construction contracts and other commodities or services not susceptible to a competitive sealed bid.

(2) Professional services other than architectural and engineering are exempt from the provisions of this chapter; however, using agencies may, in the director of purchasing's discretion, utilize the competitive sealed proposal process set forth herein.

(B) *Requests for proposals.* Proposals shall be solicited through a request for proposals. As required by the Director of Purchasing, a request for information, request for qualifications or other forms of solicitation may be utilized to ascertain information, to establish qualifications, or to establish a list of those eligible to submit bids or proposals at subsequent steps in the procurement process in a manner established by the Director of Purchasing. The solicitations shall also contain, among other things, a description of the projected scope of services or system requirements, a notice of mandatory city contractual provisions or terms and conditions required by this chapter or other state or federal agencies as well as the requirements of Chapter 93 of the code of ordinances. Services shall be selected on the basis of a request for proposals. The Director of Purchasing shall establish guidelines identifying the content of requests for proposals. With respect to any particular request for proposals, the Director of Purchasing or the Corporation Counsel may vary any clauses that may have, prior thereto, been promulgated by the Department of Purchases for inclusion in all request for proposals. However, the Director of Purchasing does not have the discretion to vary the specifically enumerated legal requirements of the code of ordinances.

(C) *Public notice.* Adequate public notice of the request for proposals shall be given a reasonable time period prior to the date set forth therein for the opening of proposals and in a manner that the Director of Purchasing determines will maximize public participation and competition in the competitive sealed proposal process.

(1) The notice shall be inserted, at least ten calendar days before the final date of submitting proposals in the major daily newspaper published in the city and may, in the sole discretion of the Director of Purchasing, be posted on the Internet.

(a) *Notice following pre-qualification of offerors.* In the event of pre-qualification of offerors, the notice may be sent only to the vendors qualified to respond.

(b) *Notice; indication.* Each notice of a planned purchase under this chapter shall indicate the type of commodities or services to be purchased.

(2) The using agency shall provide the Director of Purchasing with special notice requirements necessary to comply with the provisions of federal or state grants, loans or reimbursement agreements.

(D) *Receipt of proposals; register of proposals.* Proposals shall be opened publicly at the time and place designated in the request for proposals. Proposals shall be opened and only the names of each offeror recorded so as to avoid disclosure of contents to competing offerors during the process of negotiation. A register of proposals shall be prepared in a format established by the Director of Purchasing. The register shall be open for public inspection after the award of the contract or purchase order, with the exception of confidential trade and business information withheld in accordance with the general statutes.

(E) *Evaluation factors and criteria.*

(1) The request for proposals shall state all evaluation criteria including, but not limited to:

(a) Demonstrated compliance with the design or other requirements;

(b) Offeror qualifications;

(c) Financial capacity;

(d) Project schedule;

(e) Price or life cycle price, where appropriate; and

(f) Other factors, if any.

(2) Not withstanding the aforementioned criteria, additional factors may be considered at the discretion of the Director of Purchasing prior to the opening of the proposals.

(F) *Correction or withdrawal of proposals; cancellation of awards.* Correction or withdrawal of inadvertently erroneous proposals before or after award, or cancellation of awards of contracts or purchase orders based on the mistakes, may be permitted by the Director of Purchasing, provided that, the determinations by the Director of Purchasing shall take into consideration preservation of the integrity of the competitive sealed proposal process under this chapter.

(1) *Prohibited practices following opening of proposals.* After opening the proposals, no changes in prices or other provisions of proposals prejudicial to the interest of the city or fair competition shall be permitted.

(2) *Written determination regarding cancellation of awards or contracts or purchase orders.* Except as otherwise provided by any regulation and/or policy, all decisions to permit the correction or withdrawal of proposals, or cancel awards of contracts or purchase orders based on proposal mistakes shall be supported by a written determination made by the Director of Purchasing.

(G) *Selection committee.* The Director of Purchasing or his designee shall establish a selection committee of two or more people to review responses to requests for proposals. No member of the selection committee shall have a financial interest in the transaction.

(1) *Review of responses to request for proposals.* The selection committee shall evaluate the responses to requests for proposals. The selection process may include interviews or oral presentations, with the determination of those to be invited to be interviewed or to make an oral presentation to be based on the established evaluation factors.

(2) *Recommendation.* Based on its review, the selection committee shall submit to the Director of Purchasing a list, in rank order based on the established evaluation factors, of no fewer than three firms, if possible.

(3) *Negotiation.* The Director of Purchasing, or his designee, shall negotiate a contract, including in regard to cost and scope, with the firm rated highest by the selection committee.

(4) *Failure to negotiate a contract.* Should the Director of Purchasing, or his designee, be unable to negotiate a satisfactory contract that he determines to be fair and reasonable to the city with the firm selected for negotiations in accordance with this section, the Director of Purchasing, or his designee, may then continue this process, starting with the next highest rated firm on the list established by the selection committee, until such time as a contract determined by the Director of Purchasing to be fair and reasonable to the city is negotiated or until the Director of Purchasing determines that the existing procurement process should be terminated.

(H) *Award.*

(1) *Offer most advantageous to the city.* Award shall be made by the Director of Purchasing, or his designee, to the responsible offeror whose proposal conforms to the solicitation and is determined in writing by the Purchasing Director, or his designee, to be the most advantageous to the city, in accordance with the criteria set forth in the request for proposals or other solicitation, including price and the evaluation factors.

(2) *Contents of transactional files.* The contract or purchase order files shall contain the basis on which the award is made.

(3) *Written notice of award.* Notice of the award of a contract or purchase order shall be promptly given to the successful offeror.
(Ord. passed 6-20-2005)

§ 38.023 REQUESTS FOR QUALIFICATIONS.

(A) *Policy.* The city, at the request of a using agency, may issue a request for qualifications for services for a means of prequalifying a firm prior to proceeding with a competitive seated bid as set forth

herein or a request for proposal as set forth herein. The remaining requirements hereof shall be followed for those firms that are prequalified.

(B) *Solicitation of professional service firms.* The Director of Purchasing shall, upon request of a using agency, issue a request for qualifications in order to encourage firms engaged in the lawful practice of their profession to submit a statement of qualifications and performance data. The request for qualifications shall be published in appropriate trade and professional publications in order to attain the objectives of the policies set forth in this section.

(C) *Selection Committee.* The Director of Purchasing or his designee shall establish a Selection Committee of two or more people to review responses to requests for qualifications. No member of the Selection Committee shall have a financial interest in the transaction.

(1) *Review of responses to request for qualifications.* The Selection Committee shall evaluate the responses to requests for qualifications.

(2) *Recommendation.* Based on its review, the Selection Committee shall submit to the Director of Purchasing a list, in rank order based on the evaluation factors and criteria established by the Selection Committee, of no fewer than three firms, if possible.

(3) *Services other than architectural and engineering services.* For services other than Architectural and Engineering services, upon submission to the Director of Purchasing of the list contemplated under division (C)(2) above, in lieu of the negotiations as contemplated in division (C)(4) below, invitations to bid or requests for proposals, whichever is applicable given the nature of the procurement involved, shall be sent to those appearing on the list. The successful bidder or respondent shall, thereafter, be chosen in accordance with the provisions of either § 38.022 and 38.023, whichever is applicable.

(4) *Architectural and engineering services negotiations.* It is the policy of the city to publicly announce all requirements for architectural and engineering services and to negotiate contracts for architectural or engineering services on the basis of demonstrated competence and qualifications for the type of services required and at fair and reasonable prices.

(a) With respect to the procurement of Architectural and Engineering Services costing $25,000 or more, a list of qualified firms shall be chosen as provided for in divisions (B) and (C)(1) and (2) above. Upon submission to the Director of Purchasing of the list contemplated under division (C)(2) above, the Director of Purchasing, or his designee, shall negotiate a contract with the highest qualified firm at the compensation, which the Director of Purchasing, or his designee, determines in writing to be fair and reasonable to the city.

1. *Considerations.* In preparing a decision the Director of Purchasing, or his designee, shall take into account the estimated value, the scope, the complexity and the professional nature of the services to be rendered.

2. *Failure to negotiate a contract.* Should the Director of Purchasing, or his designee, be unable to negotiate a satisfactory contract with the firm considered to be the most qualified, at a price the Director of Purchasing determines to be fair and reasonable to the city, negotiations with that firm shall be formally terminated. If negotiations are to continue, the Director of Purchasing, or his designee, shall then undertake negotiations with the second most qualified firm. Failing accord with the second most qualified firm, the Director of Purchasing, or his designee, shall formally terminate negotiations. Should the Director of Purchasing, or his designee, be unable to negotiate a contract at a fair and reasonable price with any of the selected firms, the Director of Purchasing, or his designee, shall select additional firms in order of their competence and qualifications and the Director of Purchasing, or his designee, shall continue negotiations in accordance with this section until an agreement is reached. If, at any time during this process, the Director of Purchasing determines that cancellation of the existing procurement process would be in the best interests of the city, he may do so in writing.

(b) With respect to the procurement of Architectural and Engineering Services under $25,000, all such services shall be solicited and selected in accordance with the regulations or policies promulgated by the Director of Purchasing.
(Ord. passed 6-20-2005)

§ 38.024 RECURRING PROCUREMENTS.

(A) *The blanket or consolidated procurement.* The Director of Purchasing shall, wherever appropriate, consolidate the purchase of commodities or services required by the various departments, on a recurring basis, in order to obtain competitive sealed bids or other forms of solicitation to assure the best possible prices. Upon award, the Director of Purchasing shall notify all using agencies of the blanket or consolidated procurement; which shall be valid for the fiscal year in which it was issued.

(B) *Information.* The Director of Purchasing shall circulate to all department heads the pertinent information or catalogs relative to each blanket or consolidated procurement.

(1) *Submission of recurrent commodities and services.* By May 1 of each year, each department head shall submit to the Director of Purchasing an inventory and estimated annual expenditure for commodities or services utilized, on a recurrent basis, in the customary and usual activities of the Department. Within 60 days thereafter, the Director of Purchasing shall determine whether the commodities and services fall into the category of recurrent commodities and, if so, shall solicit such recurrent commodities or services in the appropriate manner set forth in this chapter.

(2) *Issuance of purchase orders on behalf of using agencies.* Upon notice of the award of the blanket or consolidated procurement, the using agencies may submit a requisition, pursuant to § 38.003, for the purchase of the commodities or services. Each using agency shall be limited to the unexpended and unencumbered funds in their budget designated for the purchases and shall be required to file a § 38.004, an encumbrance with the Director of Purchasing.
(Ord. passed 6-20-2005)

§ 38.025 SMALL PURCHASES.

(A) *Small purchases between $2,500 and $9,999.* All procurements where the amount involved is less than $10,000, but equal to or greater than $2,500 shall be made without newspaper advertisement and without observing the procedures for the award of contracts and purchase orders.

(1) *Price alternatives.* All small purchases shall, wherever possible, be based on at least three written price alternatives from qualified bidders, as solicited by the Director of Purchasing or, at his discretion, a representative of the using agency. The notice pertaining to the solicitation shall set forth the time and place for the submission. The notice may be tendered to qualified bidders, by telephone, facsimile or electronically. A record of all notices and price alternatives shall be kept in the records of the Department of Purchases.

(2) *Award.* The Director of Purchasing shall award the purchase order to the lowest responsible bidder. If the purchase order is not given to the lowest responsible bidder, a written explanation shall be made by the Director of Purchasing and be filed as a public record with the other papers to the transaction.

(B) *Small purchases in an amount less than $2,500.* All procurements where the amount involved is less than $2,500 may be awarded on a single bid and, at the Director's discretion, accepted orally by the using agency.

(C) *Sustaining purchase orders.* Sustaining purchase orders may be issued by the Director, in his sole discretion, for the contingent needs of the various departments; but no sustaining purchase orders shall exceed the sum of $1,500.

(D) *Artificial division of procurements prohibited.* The Director of Purchasing has the authority to determine that a using agency has artificially divided procurement requirements so as to constitute a small purchase under this section and thereby prohibit the using agency from utilizing the small purchase procedures.
(Ord. passed 6-20-2005)

§ 38.026 SOLE SOURCE PROCUREMENT.

(A) *A single available source for a commodity, service or construction item.* A contract or purchase order may be awarded for a commodity, service or construction item without competition when, under this section the Director of Purchasing determines, in writing, that there is only one source for the required commodity, service or construction item.

(B) *Factors considered by the Director of Purchases.* Among the factors the Director of Purchasing may take into consideration are the following:

(1) Equipment, material, services or supplies for which there is no comparable competitive product from more than one supplier;

(2) Public utility services from natural or regulated monopolies;

(3) A component or replacement part for which there is no commercially available substitute, and which can be obtained only from the manufacturer;

(4) An item where compatibility is the overriding consideration, such as computer operating software enhancements for an existing system;

(5) Whether there is only one authorized service provider; or

(6) A used item that becomes immediately available and is subject to prior sale.
(Ord. passed 6-20-2005)

§ 38.027 PROCUREMENTS PERTAINING TO PUBLIC EMERGENCIES.

Notwithstanding any other provisions of this chapter, the Mayor may authorize the Director of Purchasing to make emergency procurements when there exists a threat to the lives, health, property, welfare or safety of the citizens of the city.

(A) *Determination of public emergency*. To so authorize the emergency procurements, the Mayor shall act in accordance with a determination of public emergency by:

(1) The President of the United States;

(2) The Governor of the state;

(3) The affirmative vote of eight members of the Board of Aldermen; or

(4) The Mayor, only upon the written advice of the Director of Health or the Superintendent of Police or Fire Chief.

(B) *Written determination*. The Mayor's authorization shall be in writing and include a determination of the basis for the public emergency and the reasons for the selection of the particular contractor. The determination shall be filed with the City Clerk for public inspection within 24 hours of the authorization and forwarded, by the City Clerk, to the Board of Aldermen and Finance and Audit Review Commission.
(Ord. passed 6-20-2005)

§ 38.028 WAIVER OF BID OR PROPOSAL REQUIREMENT: EXTRAORDINARY CONDITIONS.

(A) *Extraordinary conditions or contingencies*. Whenever a situation (that is not deemed a public emergency, as set forth in § 38.027) exists by reason of extraordinary conditions or contingencies that

could not reasonably be foreseen and guarded against (or within the purview of § 38.027 above), or because of unusual trade or market conditions, the Director of Purchasing, may, if it is in the best interest of the city, waive the competitive bid or proposal requirements set forth in §§ 38.021 and 38.022. The determination shall be based upon need and shall not be utilized in order to satisfy preferences or convenience of the using agency, for preventing funds from lapsing at the end of a fiscal year or for any reason that would circumvent the procurement methods set forth in this chapter.

(B) *Filing of an annual report.* A statement of all purchases made under the provisions of this section shall be set forth in the annual report of the Finance and Audit Review Commission.
(Ord. passed 6-20-2005)

§ 38.029 EXEMPT SERVICES.

The following shall be exempt from the competitive bid and proposal process. Using agencies may, nonetheless, elect to undertake a competitive selection process to solicit professional services which are exempt from the competitive bid and proposal process:

(A) Procurement of the services of attorneys-at-law hired by the Corporation Counsel and approved by the Mayor, in accordance with the standards set forth in § 7B-1(d)(5) of the Charter of the city;

(B) Procurement of professional services as defined in § 38.002;

(C) Procurement of architectural and engineering services where entered in compliance with § 38.023 of this chapter;

(D) Procurement of services, equipment or leases of equipment that are necessary for instruction and related services to be provided to individual students with disabilities in accordance with the requirements of the Individuals with Disabilities Act ("I.D.E.A.") and their respective regulations; and

(E) Agreements between:

(1) The city, state and/or federal governments pertaining to grants; or

(2) The city and other community based organizations, universities and other nonprofit entities participating as potential service providers in the application for a competitive grant offered by the federal or state governments.
(Ord. passed 6-20-2005)

§ 38.030 EXEMPT INVESTMENT AND INSURANCE.

Investment of city funds, including those of the pension plan, are exempt from the competitive bid and proposal process contained in this chapter, except for the selection of any investment advisors or managers who direct the investment of the funds. The placement of insurance coverage is exempt from

the competitive bid and proposal process contained in this chapter, except for the selection of the broker who places any insurance on behalf of the city.
(Ord. passed 6-20-2005)

§ 38.031 RECORD OF PROCUREMENT ACTIONS TAKEN WITH REGARD TO SOLE SOURCE, WAIVER AND EMERGENCY PROCUREMENTS.

(A) The Director of Purchasing shall maintain a record, at the Office of the Department of Purchases, listing all contracts or purchase orders made under §§ 38.026 through 38.028 pertaining to sole source, emergency and waiver purchases for a minimum of five fiscal years.

(B) The record shall contain:

(1) Each contractor's name;

(2) The amount and type of each contract or purchase order; and

(3) A listing of the commodities, services or construction procured under each contract or purchase order.
(Ord. passed 6-20-2005)

§ 38.032 FEDERAL AND STATE PROCUREMENT STANDARDS; APPLICATION FOR COMPETITIVE GRANTS.

Notwithstanding the requirements of this chapter, all procurements that include funding by federal or state funds, including the application for competitive grants, shall comply with the procurement and legal requirements of the federal or state laws or regulations.
(Ord. passed 6-20-2005)

§ 38.033 FEDERAL PROCUREMENT SUBJECT TO SECTION 3.

(A) Whenever a recipient receives HUD housing or community development program funds for a project in excess of $200,000, any contractor or subcontractor procured under this chapter for work on such project for a contract in excess of $100,000, shall comply with the city's Section 3 Policy. The Section 3 Policy shall apply to every contractor or subcontractor meeting the $100,000 threshold.

(B) The city shall notify all potential contractors and subcontractors of the Section 3 Policy by including a copy of, or information from, the Section 3 Policy in any request for proposal, bid package and/or contract associated with a Section 3 project. A copy of the Section 3 Policy shall also be made

available for review and inspection at the following locations: City Clerk's Office, 235 Grand Street, Waterbury, CT; City of Waterbury Purchasing Department, 235 Grand Street, Waterbury, CT and Waterbury Development Corporation, 24 Leavenworth Street, Waterbury, CT; as well as on the Purchasing Department website: http://www.waterburyct.org/content/458/930/933.aspx and the Waterbury Development Corporation website: http://www.wdconline.org.
(Ord. passed 2-21-2012)

CANCELLATION OF INVITATIONS FOR BIDS OR REQUEST FOR PROPOSALS

§ 38.045 CANCELLATION OF INVITATION FOR BIDS OR REQUESTS FOR PROPOSALS; WAIVER OF MINOR IRREGULARITIES.

(A) *Cancellation.* The Director of Purchasing may:

(1) Cancel an invitation for bids, a request for proposals or other solicitation; or

(2) Reject any or all bids or proposals, in whole or in part, as may be specified in the invitation for bids, request for proposals, or other solicitation, when he deems it in the best interest of the city, in

accordance with regulations and/or policies, if any. The Director shall set forth his reasons, in writing, which shall be part of the contract file. No written determination shall be required for the cancellation of an entire invitation for bid or request for proposals.

(B) *Waiver of minor irregularities.* The Director of Purchasing may waive minor irregularities in bids and proposals if he determines that such a waiver would be in the best interest of the city. The Director of Purchasing shall state the reasons for any such waiver in writing and include such statement in the contract file.
(Ord. passed 6-20-2005)

QUALIFICATIONS AND DUTIES

§ 38.046 RESPONSIBILITY OF BIDDERS AND OFFERORS.

(A) *Determination of nonresponsibility.* The Director of Purchasing shall make a determination of nonresponsibility of a bidder or offeror. The unreasonable failure of a bidder or offeror to promptly supply information in connection with an inquiry with respect to responsibility may be grounds for a determination of nonresponsibility with respect to the bidder or offeror. The Director of Purchasing may seek the advice of the using agency and the consultants, if any. If requested by the bidder or offeror deemed nonresponsible the Director of Purchasing may provide a written determination.

(B) *Right of nondisclosure.* To the extent permitted by the state general statutes, confidential information furnished by a bidder or offeror pursuant to this chapter shall not be disclosed outside of the Department of Purchases without prior written consent by the bidder or offeror.
(Ord. passed 6-20-2005)

§ 38.047 PREQUALIFICATION OF SUPPLIERS.

As set forth herein, prospective suppliers may be prequalified for particular types of commodities, services and construction. The Director of Purchasing shall determine the method of submitting prequalification information and the information required in order to be prequalified.
(Ord. passed 6-20-2005)

§ 38.048 SUBSTANTIATION OF OFFERED PRICES.

The Director of Purchasing may request factual information reasonably available to the bidder or offeror to substantiate that the price or cost offered, or some portion of it, is reasonable.
(Ord. passed 6-20-2005)

§ 38.049 PREFERENCE FOR BIDDERS AND OFFERORS LOCATED IN THE CITY.

A preference shall be given to a qualified bidder or offeror whose business is located in the city whose bid or proposal falls within 2% of the lowest bid or the preferred proposal. Notwithstanding the foregoing, the 2% preference shall not apply when the bid or proposal exceeds the amount of $20,000 over the lowest qualified bid or preferred proposal. This provision shall apply to commodities or services that are funded entirely by the city general or capital funds.
(Ord. passed 6-20-2005)

§ 38.050 REPORTING OF ANTI-COMPETITIVE PRACTICES.

When for any reason collusion or other anticompetitive practices are suspected among any bidders or offerors, a notice of the relevant facts shall be transmitted to the Corporation Counsel who shall refer the matter to the Attorney General of the State of Connecticut.
(Ord. passed 6-20-2005)

DETERMINATIONS

§ 38.051 RETENTION OF PROCUREMENT RECORDS.

All procurement records shall be retained and disposed of in accordance with the records retention guidelines established by the laws of the State of Connecticut.
(Ord. passed 6-20-2005)

§ 38.052 FINALITY OF DETERMINATIONS.

The determinations of the Director of Purchasing required by the following sections are final and conclusive:

(A) Section 38.069(D) (Contracts: Sale, Lease or Rental of City Property);

(B) Section 38.021(F) (Competitive Sealed Bidding — Correction or Withdrawal of Bids; Cancellation of Awards);

(C) Section 38.022(A) (Competitive Sealed Proposals — Conditions for Use);

(D) Section 38.022(H) (Competitive Sealed Proposals — Award);

(E) Section 38.023 (Requests for Qualifications);

(F) Section 38.024 (Recurring Procurements);

(G) Section 38.025 (Small Purchases);

(H) Section 38.026 (Sole Source Procurement);

(I) Section 38.027 (Procurements Pertaining to Public Emergencies);

(J) Section 38.028 (Waiver of Bid or Proposal Requirements);

(K) Section 38.029 (Exempt Services);

(L) Section 38.032 (Federal and State Procurement Standards);

(M) Section 38.046(A) (Responsibility of Bidders and Offerors — Determination of Nonresponsibility);

(N) Section 38.048 (Substantiation of Offered Prices);

(O) Section 38.049 (Preference for Bidders and Offerors Located in the City); and

(P) Section 38.067 (Contractor Accounting Requirements).
(Ord. passed 6-20-2005)

CONTRACTS AND PURCHASE ORDERS

§ 38.065 OBLIGATIONS OF PERSONS SEEKING A CONTRACT OR PURCHASE ORDER WITH THE CITY; AFFIDAVITS, DISCLOSURES AND ENCUMBRANCES.

(A) (1) No contract, regardless of how procured, shall be awarded by the city to any person until the following documents have been received by the city:

(a) An affidavit of the person that the person, or affiliated entity, has no delinquent taxes or other financial obligation owed to the city; and

(b) Disclosures as required by Chapter 39 this code.

(2) The affidavits and disclosures, if not submitted as part of competitive bid provisions, shall be obtained by the city agency or official seeking the contract.

(B) No contract, regardless of how procured, shall be awarded by the city to any person until a certification has been obtained from the Tax Collector for the city that the person or any affiliated entity, either directly or through a lease, has no back taxes.

(C) No purchase order shall be awarded;

(1) In the event it has been determined that a bidder, offeror or any affiliated entity, either directly or through a lease, owes back taxes to the city; and/or

(2) In the event it has been determined that the bidder, offeror or any affiliated entity has not filed a current list of taxable personal property as required by the general statutes; unless it is otherwise certified that the person is not required to file the list.
(Ord. passed 6-20-2005)

§ 38.066 DISCLOSURES REQUIRED BY THE FEDERAL OR STATE GOVERNMENTS.

In addition to the foregoing, no contract or purchase order shall be awarded by the city to any person, until all affidavits, disclosures and certifications required by the federal or state governments have been executed and delivered as required.
(Ord. passed 6-20-2005)

§ 38.067 CONTRACTOR ACCOUNTING REQUIREMENTS.

The city may require contractors to submit appropriate documentation prior to the award of contracts or purchase orders in which the city agrees to reimburse costs, confirming that:

(A) The proposed contractor's accounting system will permit timely development of all necessary cost data in the form required by the specific contract type contemplated; and

(B) The proposed contractor's accounting system is adequate to allocate costs, if required, in accordance with generally accepted accounting principles.
(Ord. passed 6-20-2005)

§ 38.068 PURCHASE ORDERS; WHEN REQUIRED.

Purchase orders shall be required for all commodities regardless of the amount, unless the Director of Purchasing determines that a contract is necessary. All agreements for services and professional services in an amount less than $50,000 shall be documented by purchase order, unless the scope of services requires the utilization of a contract, as determined by the Director of Purchasing following consultation with the Corporation Counsel.
(Ord. passed 6-20-2005)

§ 38.069 CONTRACTS; WHEN REQUIRED.

(A) *When required.* Contracts shall be required for leases (or other real estate agreements) and for all services and professional services in the amount of $50,000 or more.

(B) *Grants with the federal or state government.*

(1) *Required documentation.* All grants with the federal or state government, otherwise exempt from certain provisions of this chapter, shall be documented in writing and executed as set forth in § 38.072.

(2) *Required review.* All federal or state government grant requests and applications other than those for the Board of Education shall be reviewed by the Office of the City's Budget Director prior to submission.

(3) *Required approvals.* All grant applications and contracts may be subject to approval by the Board of Aldermen if required by federal or state law or as may be otherwise set forth in this code. Notwithstanding the exemption of grants from any other provisions of this Chapter 38, the city will not execute a written agreement pertaining to grants that require matching funds by the city, unless approved by the Board of Aldermen.

(C) *Grants with other agencies.*

(1) *Required documentation.* All grants with agencies other than the federal or state government (other agencies), which are otherwise exempt from certain provisions of this chapter, shall be documented in writing and executed as set forth in § 38.072.

(2) *Required review.* All other agencies grant requests and applications shall be reviewed by the Office of the City's Budget Director prior to submission.

(3) *Required approvals.* All other agencies grant contracts shall be subject to review and approval of the Director of Finance and Corporation Counsel. Notwithstanding the exemption of grants from any other provisions of this Chapter 38, the city will not execute a written agreement pertaining to grants that require matching funds by the city, unless approved by the Board of Aldermen.

(D) *Sale, lease or rental of city property.* Rental, lease, purchase and lease/purchase agreements shall be subject to the requirements of this chapter for competition. The Director of Purchasing shall determine the method of selection and issue a written determination relating thereto. The forgoing notwithstanding, any agreement to transfer or dispose of any city held interest in real property is subject to the following requirements.

(1) The Director of Purchasing shall instruct the City Planner to compile and maintain a list of all real property in which the city may have an interest which, in the opinion of the City Planner, are

eligible for transfer or disposition by the city. The list shall, for each interest in real property appearing thereon, include a description of any conditions to which any such transfer or disposition must be subject in order to ensure the property's use in compliance with any city plan, neighborhood revitalization plan or other similar plan or plans, (as that term is defined under applicable laws, statutes and ordinances), which may have been adopted by, or is otherwise in effect, at the time of the transfer or disposition. The City Planner shall make determinations as to the ownership of any such real property in which the city is suspected to have an interest only after consultation with the Corporation Counsel.

(2) Any such transfer or disposition must first be requested in writing by, or recommended in writing by, the using agency, if any, having direct control over the interest in, real property prior to its transfer or disposition and the City's Property Manager (as designated by the Director of Finance). If any such request or recommendation is made by the Property Manager without identifying a using agency having direct control over the interest, the Property Manager's request or recommendation shall state the reasons for concluding that no using agency is identifiable. If a request or recommendation for such a transfer or disposition is made by a using agency, then the request or recommendation must be forwarded to the Property Manager for approval of the transfer or disposition prior to initiating further proceedings to effectuate the transfer or disposition.

(3) The city may entertain requests for transfer or disposition of any interest in real property from members of the general public and the requests shall be directed to the Property Manager. Upon receipt of such a request by the Property Manager, the Property Manager shall have the discretion to refuse to process the request. Any refusal to process the request shall, upon the request of any interested party, be subject to review by the Board of Aldermen and, upon a simple majority vote thereof, may be overridden.

(4) If a request for transfer or disposition as contemplated under division (D)(3) above is received and a decision to process the same is made, either by the Property Manager or by the Board of Aldermen subsequent to a review of a refusal by the Property Manager, the Property Manager must then determine which using agency has direct control over the interest in real property and obtain the using agency's written approval of the transfer or disposition. If no such using agency can be identified, the Property Manager shall state in writing the reasons for concluding that no using agency is identifiable.

(5) Prior to approving any transfer or disposition, the Property Manager shall be responsible for assuring that the interest in real property sought to be transferred or disposed of appears upon the aforementioned list prepared by the City Planner. If the interest does not appear on the list, then the Property Manager must obtain written authorization for the City Planner for the transfer or disposition. The City Planner's authorization must also state any and all conditions, as mentioned in division (D)(1) above, to which any such transfer or disposition must be subject or state that no such conditions exist.

(6) After obtaining any and all approvals as may be required pursuant to divisions (D)(1) through (5) above, the Property Manager shall, subject to the approval of the Purchasing Director, choose the method of solicitation of bids to be used relative to the given transfer or disposition.

Thereafter, and after consultation with the Director of Purchasing and the Corporation Counsel, the Property Manager shall prepare any required solicitation documents relative to the transfer and disposition of the interest in real property in question. The documents shall include, amongst other things, any relevant selection criteria as recommended by the Director of Purchasing. Upon the completion of the solicitation documents, they shall be presented by the Property Manager to the Director of Purchasing for final approval. The Director of Purchasing shall, thereafter and after consultation with the Corporation Counsel, either approve or reject such solicitation documents. In the event that the documents are rejected the Director of Purchasing shall, by any reasonable means, inform the Property Manager of the perceived deficiencies and of the Director of Purchasing's recommendations for curing the same. Upon curing any such deficiencies, the solicitation documents shall be resubmitted to the Director of Purchasing for approval. Upon ultimate approval of the solicitation documents, the Director of Purchasing shall provide written notice thereof to the Property Manager and to the Corporation Counsel. After the approval by the Director of Purchasing, the Director of Purchasing shall advertise such solicitation or provide such other notice of the proposed transfer or disposition as he deems appropriate under the solicitation method being employed. Any approvals given by, or actions taken by, the Director of Purchasing under this division (D)(6) shall be given or taken in a manner which the Director of Purchasing reasonably deems to be consistent with the principles of competition which are applicable to the solicitation of procurements under this chapter and any restrictions or exceptions provided for in relation to effectuating the principles hereunder.

(7) Upon the receipt of responses to any solicitation as contemplated in division (D)(6) above, the Director of Purchasing shall open them in a manner the Director deems to be consistent with the provisions applicable to the solicitation of procurements under this chapter and shall, thereafter establish a committee to review the same. The committee shall consist of, at a minimum, the Director of Purchasing the Property Manager and the Chief Executive Officer of the Waterbury Development Corporation or his designee. The Mayor may, however, elect to participate on the committee, or to appoint a designee to do so in his stead, if the Mayor deems it to be in the city's best interest to do so. The committee shall either reject all bids or choose one bidder as the successful bidder based upon the selection criteria identified in the solicitation documents.

(8) The Property Manager shall prepare a recommendation to award a contract for the transfer or disposition in question to the successful bidder chosen as contemplated under division (D)(7) above. The Property Manager shall submit the recommendation to the City Plan Commission for a report pursuant to Conn. Gen. Stat. § 8-24, as the same shall be amended from time to time. The Property Manager shall, after a failure of the City Plan Commission to act within the requisite statutory time period or upon issuance of a report by the City Plan Commission, submit the recommendation, and a copy of any related City Plan Commission report, to the Board of Aldermen for action pursuant to the applicable provisions of the Charter of the city as same may be amended from time to time.

(9) The Property Manager shall be responsible for providing the Board of Aldermen, with any and all information required, including evidence of value if applicable and copies of all bids or responses received by the city in pursuant to the solicitation of the bids or responses relative to any given property,

to evaluate and take action on any such recommendation. The Property Manager shall, furthermore, be responsible for obtaining any and all appraisals for properties for which, in the Board's opinion as evidenced by resolution of the Board, a transfer or disposition may be subject to referendum pursuant to the applicable provisions of the Charter of the city, as same may be amended from time to time.

(10) No such transfer or disposition as governed by this section shall be effectuated without the terms thereof having first been included in a contract executed by the city and the successful bidder. Such contract shall be in a form as provided by the Corporation Counsel and shall be subject to any and all other legal requirements relating to approvals of contracts to which the city is a party including approval requirements contained in any applicable state statute, the Charter of the city, this chapter and any other applicable provisions of the code of ordinances.

(11) Any assignment by the city of any liens it may own, as may be authorized pursuant to the state general statutes, shall be exempt from the provisions of this chapter and shall be governed by the applicable state statutory provisions. Nothing herein, however, shall prohibit compliance with any provisions of this chapter in relation to any such assignment if doing so would be in city's best interest. (Ord. passed 6-20-2005)

§ 38.070 EXCEPTIONS.

(A) Notwithstanding the requirements of §§ 38.068 and 38.069, neither a purchase order or a contract shall be required for the following:

(1) Natural gas or electric utilities;

(2) City employee expense reimbursements;

(3) Inter-city department charges; or

(4) Other expenditures at the discretion of the Director of Purchasing.

(B) The encumbrance of funds requirements of § 38.004 of this chapter apply to this section. (Ord. passed 6-20-2005)

§ 38.071 ISSUANCE OF PURCHASE ORDERS.

(A) *Issuance by the Director of Purchasing.* Requisitions by the using agency for the purchase of all commodities regardless of the amount and services under $50,000 shall be reviewed, encumbered and approved by the Budget Director and processed by the Purchasing Department prior to the issuance of a purchase order. In order to meet finance system requirements, purchase orders shall be issued for each contract. In such cases, contract language shall govern over purchase order language.

(B) *Required contents.* A purchase order shall not be complete without inclusion of terms and conditions approved by the Office of the Corporation Counsel, special terms and conditions required by federal and state government funding sources and the identity of the personnel of the using agency responsible for the administration of the transaction covered by the purchase order. Further, the Director of Purchasing shall review, with the consultation of the Corporation Counsel, if deemed necessary, the insurance and bond requirements in order to ascertain compliance with the standards set by the Director of Finance or his designee.
(Ord. passed 6-20-2005)

§ 38.072 EXECUTION OF CONTRACTS.

(A) *Execution by the Mayor.* The Mayor, on behalf of and in the name of the city, shall execute all contracts made by the city.

(B) *Role of the Corporation Counsel.* Upon award of a contract by the Director of Purchasing, the Corporation Counsel or an attorney acting under the authority of the Corporation Counsel shall approve all contracts, both as to form and compliance with all legal requirements of the Charter. In addition to such other legal requirements as may be examined by the Corporation Counsel, a contract shall not be deemed to comply with the legal requirements of the Charter if the Corporation Counsel determines that satisfactory proof of the availability of unexpended, appropriated funds does not exist or if the file does not include each of the following:

(1) A recitation, by the using agency, of the amount of funds to be expended by the terms of the contract, including, but not limited to, a breakdown of funds in each fiscal year of a multi-year transaction, including an estimate of capital funds in subsequent years;

(2) The special terms and conditions required by federal and state government funding sources and the identity of the personnel of the using agency responsible for the administration of the transaction covered by the contract; and

(3) The Corporation Counsel shall review the vendor-submitted insurance and bonds in order to ascertain compliance with the standards set by the Director of Finance or his designee.

(C) *Approval by the Board of Aldermen.* The following shall be subject to Board of Aldermen approval:

(1) All contracts with the exception of contracts for services which are the subject of an exemption hereunder in excess of $50,000;

(2) Any multi-year contract, accompanied by appropriate explanatory information prepared by the Director of Purchasing,

HIRING OF WATERBURY RESIDENTS ON CERTAIN PUBLICLY-FUNDED CONSTRUCTION PROJECTS

§ 34.15 PURPOSE.

The purpose of this subchapter is to increase the benefit to the City of Waterbury and its residents from the city's investment of public funds in certain publicly-funded construction projects to allow the city to recognize, as a benefit of such investment, a reduction in the amount of poverty and unemployment that would otherwise exist amongst its residents and also to help reduce the economic burden that would otherwise be placed on the city in having to provide alternative assistance to those residents who, but for their being hired pursuant to the provisions of this ordinance, would remain unemployed.
(Ord. passed 2-21-2012)

§ 34.16 FINDINGS.

The City of Waterbury finds that a substantial number of city residents are not being employed by contractors performing work on publicly-funded construction projects in the City of Waterbury and that the residents, therefor, are not receiving the maximum possible benefit from the City of Waterbury's investment of public funds in the projects. The city further finds that:

(A) Recent research of hiring patterns on construction projects reveals a pattern of low hiring of residents in favor of nonresidents whose hiring is draining significant resources from the city.

(1) Only 14% of work hours performed on the construction of the $138,000,000 waste water treatment plant in 1998 - 1999 were performed by residents;

(2) Only 10% of laborers hours on city street paving in 1999 were performed by residents;

(3) With an average wage of $21 per hour on tax-funded city construction work as exemplified by the waste water treatment plant construction project, more than $13,000,000 in wages was lost by city residents on that project. Due to typical turnover of those funds among businesses in the community, $13,000,000 - $26,000,000 of additional economic activity from the multiplier affect was lost to city businesses;

(4) As a result of the high percentage of noncity residents on construction projects, fewer Waterbury residents are able to be home owners, thus reducing property taxes to the city. For each resident who loses the opportunity to be a home owner, the city loses an estimated $2,000 in revenue per year.

(5) The migration of benefits caused by the high percentage of noncity residents on construction projects increases the burden on health care providers to provide uncompensated care to Waterbury residents without health insurance. Over the course of the waste water treatment plant project alone, for example, $5,000,000 in health and pension benefits were lost to city residents. If this subchapter were minimally met, it would double the wages and benefits going to city residents; and

(6) The extra cost to tax payers of the under-usage of apprentices on the project compared to what is permissible under state law is estimated at close to $1,000,000.

(B) Waterbury residents face higher rates of unemployment than other towns and cities in the region and state.

(1) The unemployment rate among construction workers who are residents of the city is 50% higher than the statewide unemployment rate among construction workers, and more than double the unemployment rate among construction workers in similarly-sized cities. For example, the Connecticut Department of Labor reports that in September 1999, 324 city residents applied for construction jobs at unemployment offices out of a total construction workforce of 3,600 (9%). Statewide, 3,908 applicants applied out of a total construction labor force of 63,800 (6%). In Danbury, 166 city residents applied out of a total construction workforce of 4,100 (4%).

(2) Since 1984 the city's unemployment rate has been consistently higher than the rate of unemployment in the Naugatuck Valley region and the state. Unemployment is especially severe in some neighborhoods, which faced up to 19% unemployment, compared to the city's 8% unemployment in the 1990 Census.

(C) Poverty is much greater and incomes are much lower in Waterbury than elsewhere in the region and state.

(1) According to the 1990 Census, 12.1% of the city's residents lived below the poverty level, compared to 2.7% in the rest of the region and 6.8% statewide.

(2) Median 1990 household income was $30,533 in Waterbury compared to $41,721 for the state, and compared to $45,000 - $67,500 for towns in the rest of the Naugatuck Valley region. Estimates updating this data to 1997 show little change. Residents on average earn $10,000 less per capita than the statewide average of $28,000.

(3) Poverty is even more pronounced in some neighborhoods with up to 30% of their residents in poverty.

(4) The average wage for residents coming off of welfare in the city is one of the lowest in the State of Connecticut at $5.93 per hour.

(5) Over one-third of female headed households are under poverty.

(6) City children are among the poorest in the State of Connecticut, 61% of students city-wide are eligible for reduced price meals versus 25% statewide.
(Ord. passed 2-21-2012)

§ 34.17 DEFINITIONS.

For the purpose of this subchapter, the following definitions shall apply unless the context clearly indicates or requires a different meaning.

ADMINISTRATOR. The person(s), city department or agency designated by the Mayor of the city with the responsibility of overseeing the implementation and enforcement of this subchapter.

APPRENTICE. Any person currently enrolled in, or who has completed, either an apprenticeship program that complies with the Apprenticeship Standards adopted by the Connecticut State Apprenticeship Council, a training program administered by or on behalf of a legally organized labor union, or a state approved standardized craft training program.

CITY. The City of Waterbury, Connecticut.

CITY FUNDS. Funds originating within the city pursuant to the city's taxing powers or authority to raise money through the sale of public bonds, permit tax abatements and enter into tax fixing agreements and tax increment financing agreements.

CONSTRUCTION. The process of building, altering, repairing, improving or demolishing any public infrastructure facility, including any public structure, public building or other public improvements of any kind to city property or other property or space in which the city has an interest. It does not include the routine operation, routine repair or routine maintenance of any existing public infrastructure facility, including structures, buildings or real property.

CONSTRUCTION PROJECT. Any project for which the primary purpose involves construction, as defined above, deconstruction, the remediation of any hazardous materials as defined in the Connecticut General Statutes, the rehabilitation or renovation of any structure or the creation, extension, reconstruction, reconditioning or rebuilding of any portion of a municipal infrastructure or public utility system.

CONTRACTOR. Any person hired by the city, directly or indirectly through an owner, to perform construction work on covered projects, including subcontractors hired by general contractors.

COVERED PROJECT. Any construction project taking place in the city with a value of $500,000 or greater, funded in whole or in part by city funds or funds administered by the city in accordance with federal or state grant or loan programs or any other federal or state programs pursuant to which the city is funding, in whole or in part, the project. This definition of ***COVERED PROJECT*** shall include funds derived from the aforementioned federal or state grant, loan or other programs only to the extent permitted by federal and state law. The value of the projects shall equal the total consideration to be paid to all contractors stated in each contract pursuant to which contractors are performing construction work on covered projects.

FIRST-SOURCE REFERRAL PROGRAM. A program whose purpose includes but is not limited to, job training and the referral of qualified residents to contractors. The ***FIRST-SOURCE REFERRAL PROGRAM*** shall use the Good Jobs! umbrella coalition of community groups and churches as a priority source for recruitment.

GOOD JOBS ADMINISTRATION BUDGET. The amount of funding required to oversee the implementation and enforcement of this subchapter in a given fiscal year.

HIRING GOAL. The 30% of the total worker hours on each covered project shall be performed by residents. At least 25% of construction trade jobs shall go to apprentices. At least 70% of all "new hires" (those workers hired by a contractor on a project, other than existing employees and those referred by union hiring halls with prior seniority in the case of a union job) shall be "economically disadvantaged" individuals, defined as those earning less than 150% of the poverty line at the time of application. A minimum of 5% of the construction workforce labor hours will be local resident, minority artisans. A minimum of 5% of the construction workforce labor hours will be women. A minimum of 10% of the total work hours shall be allocated for minorities. Contractors are expected to employ a workforce that represents the population of the city.

LIAISON COMMITTEE. The committee established by the Board of Aldermen to monitor compliance with the provisions of this subchapter, and make recommendations to the Administrator and the Board of Aldermen regarding enforcement. The committee shall convene monthly in a space open to the public. The committee shall be comprised of two representatives of the Board of Aldermen one to be appointed by the President of the Board of Aldermen and one to be appointed by the Minority Leader on the Board of Aldermen, one representative from the Board of Education to be appointed by the President of the Board of Education, one representative of the Workforce Development Board, and seven representatives who are appointed by the Board of Aldermen from a list of three nominees submitted by each of the following interested parties: one contractor, one union, one civil rights group, one community and one Human Rights Commission. The committee members shall serve for a term of two years, and this nomination and selection process shall be used to fill any vacancy.

NEW HIRE. Those workers hired by a contractor on a project, other than existing employees, and those referred by union hiring halls with prior seniority in the case of a union job.

OWNER. The person who enters into a contract with a contractor for work on a covered project other than the city.

PERSON. An individual or a company, partnership, foreign or domestic corporation, partnership, limited liability company or other business entity.

RESIDENT. Any person whose domicile is the City of Waterbury, Connecticut.

ROUTINE MAINTENANCE. Simple, small-scale activities (usually requiring only minimal skills or training) planned and performed at regular intervals and being necessary to (1) extend the life of, or to delay or prevent the premature failure of, any plant or system or of any structure or structural system, building component or equipment; or (2) protect against normal wear and tear; or (3) maintain a suitable aesthetic appearance. Examples of ***ROUTINE MAINTENANCE*** may include, but are not limited to, lawn or grass cutting, hedge trimming, painting, caulking, sealing, plumbing or electrical repairs, carpet cleaning or other cleaning performed at regular intervals.
(Ord. passed 2-21-2012)

§ 34.18 HIRING GOAL AND IMPLEMENTATION.

(A) All contractors performing work on covered projects shall make good faith efforts to satisfy the hiring goal.

(B) Any contractors that fail to meet the hiring goal shall be required to demonstrate to the Administrator's satisfaction that the contractor made good faith efforts to meet the hiring goal.

(C) (1) The Mayor of the city shall appoint an Administrator annually no later than June 30th to serve as the Administrator for the city's fiscal year following such appointment or within 30 days of a vacancy that might arise during any fiscal year. The foregoing not withstanding, an incumbent Administrator shall serve until their successor has been appointed and qualified. If, in the event of a vacancy, the Mayor fails to appoint a replacement Administrator within the first 30 days following the effective date of that vacancy, then the Board of Aldermen shall have the power to fill the vacancy provided that the Board does so:

(a) Within 30 days from the date upon which the power to make the appointment vested in the Board; or

(b) Prior to May 31st if the power to make the appointment vests in the Board on or after May 1st.

(2) Should the Board fail to make the appointment during any 30 day period it has to do so, or prior to May 31st if the power to make the appointment vests in the Board on or after May 1st, then

the power of appointment shall revert to the Mayor. Thereafter, throughout the remainder of the then current fiscal year, the power to make the appointment shall alternate between the Mayor and the Board, at 30 day intervals, until an appointment is made or until June 1st at which point in time the power to make the appointment shall vest in the Mayor.

(D) The Mayor shall annually, prior to the adoption of the city's budget for the then next fiscal year and after consultation with the Administrator and all relevant city department heads, establish a Good Jobs Administration Budget for the then next fiscal year and the Mayor shall include a line item in his annual budget submission to the Board of Aldermen sufficient to fund the Good Jobs Administration Budget. If, during the fiscal year in which the Mayor submits a given Good Jobs Administration Budget as part of his budget submission, the city has retained as liquidated damages, pursuant to its contracts for covered projects, an amount greater than or equal to the Good Jobs Administration Budget as then submitted by the Mayor, the city shall be required to fund the Good Jobs Administration Budget as submitted by the Mayor.
(Ord. passed 2-21-2012)

§ 34.19 REFERRAL MECHANISM.

(A) Prior to the commencement of construction on covered projects, the Administrator shall find out from the contractor the number of job positions to be created by the project by trade and the qualifications by job title. The Administrator shall also ensure that adequate job training is available to the extent necessary to achieve the hiring goal and that screening and referral mechanisms are in place so that contractors can access qualified residents. Additionally, the Administrator shall designate a first-source referral program for the city.

(B) In the event a contractor cannot satisfy the hiring goal through its own employees and union hiring halls, the contractor shall next utilize the first source referral program in order to satisfy the hiring goal. The contractor must wait five business days after a request has been submitted before advertising the position elsewhere.

(C) Qualifications required shall be only those relevant to the job. In satisfying the hiring goal, the contractor shall employ all qualified persons referred by the first source referral program. The contractor must utilize the first source referral program whenever its hiring needs increase and they are unable to comply with the hiring goals.
(Ord. passed 2-21-2012)

§ 34.20 MONITORING.

(A) The owner for a covered project shall require all construction contracts to comply with all provisions of this subchapter, and a copy of this subchapter shall be included with all contracts with

contractors performing construction work on covered projects. The subchapter must be a contractual obligation in all contracts.

(B) All contractors performing construction work on covered projects shall submit to the Administrator weekly certified payroll records within five working days of the end of each payroll period. The records must show the person-hours on a craft-by-craft basis and identify the address, social security number, hiring date, ethnicity, gender and trade (journeyperson or apprentice) of all employees on the project. All reports must have an original signature and be signed by an authorized officer or employee of the company. Failure to comply with the provisions of this division (B) may be deemed by the Administrator to be a violation of this subchapter. Any willful misrepresentation contained in the information requested pursuant to this division (B) shall be deemed by the Administrator to be a violation of this subchapter. Unless prohibited by federal, state or local law, all records in the city's possession shall be available for public inspection.

(C) The Administrator shall review all information provided pursuant to division (B) hereof and submit monthly reports to the Liaison Committee and to the Board of Aldermen summarizing the information.
(Ord. passed 2-21-2012)

§ 34.21 GOOD FAITH EFFORTS.

(A) Contractors shall be deemed to have made good faith efforts if they demonstrate to the satisfaction of the Administrator that they have done all of the following:

(1) Utilize the first source referral program to help satisfy the hiring goal;

(2) Notify the public in the city of the employment opportunities available on covered projects. The notification shall comprise a notice in a newspaper of general circulation in the city of employment opportunities, written notice to construction unions, community organizations and city high schools concerning same, and any other notice required by the Administrator. Contractors shall maintain records of responses to the notices received thereby. All notices must state that all qualified applicants will receive consideration without regard to race, color, religion, sex or national origin. The notice required by this division shall include a statement that the notice is provided pursuant to this subchapter;

(3) Maintain a file on the job site of the names and addresses of each worker referred by the first source referral program. The file shall indicate what action was taken with respect to each referred person, and if the person was not hired, the reasons therefore; provided, however, that this subchapter shall not be construed as requiring contractors to hire any persons who do not satisfy applicable job qualifications;

(4) Participate in State of Connecticut-approved local employment training programs in the city's area, or develop on-the-job training opportunities and participate and assist in any association or employer-group training program relevant to the contractor's employment needs;

(5) Regularly review and evaluate their personnel and promotional opportunities, encourage city residents to seek opportunities and establish a program to monitor compliance with this subchapter; and

(6) Utilize other means of obtaining employees who are residents of the city that are reasonably calculated to assist with achieving the hiring goals.

(B) Contractors shall provide the city with any documentation requested by the Administrator in order to establish compliance with this subchapter.
(Ord. passed 2-21-2012)

§ 34.22 CONTRACT REQUIREMENTS FOR COVERED SERVICES.

(A) This city shall include provisions in Chapter 38, entitled "Centralized Procurement System," of the Code of Waterbury, mandating that each contract for a covered project, as that term is defined herein, awarded pursuant to Chapter 38 include provisions addressing compliance with the provisions of this subchapter by the contractor or contractors thereunder and by any subcontractor or subcontractors performing work related to any such contract.

(B) Whenever provisions are included in a contract for a covered project pursuant to division (A) of this section, they shall include provisions establishing liquidated damages for the failure of any contractor or subcontractor to comply with the provisions of this subchapter. The liquidated damages shall be based on an estimate of the cost the city would incur in having to provide alternative employment opportunities, or alternative economic assistance, to those residents who would have benefited by the city's investment in the covered project if they had been hired by the contractor or subcontractor had they complied with the provisions of this subchapter.

(C) Whenever provisions regarding liquidated damages are included in a contract for a covered project pursuant to division (B) of this section, that contract shall, if applicable, also include provisions addressing the following matters:

(1) Weekly compliance reviews by the Administrator for the purpose of assessing compliance with the provisions of this subchapter, or the lack thereof;

(2) Requiring a separate certification of compliance by the Administrator prior to the payment of any funds by the city under any such contract;

(3) The assessment of liquidated damages while said contract is executory;

(4) The retention, by the city, of funds due from it under the contract in amounts sufficient to offset any assessment of liquidated damages outstanding at the time the funds are due from the city.
(Ord. passed 2-21-2012)

EXHIBIT "B"

U.S. Department of Housing and Urban Development
SF 424 – Certifications

SF 424

The SF 424 is part of the CPMP Annual Action Plan. SF 424 form fields are included in this document. Grantee information is linked from the 1CPMP.xls document of the CPMP tool.

SF 424

Complete the fillable fields (blue cells) in the table below. The other items are pre-filled with values from the Grantee Information Worksheet.

Date Submitted	Applicant Identifier	Type of Submission	
Date Received by state	State Identifier	Application	Pre-application
Date Received by HUD	Federal Identifier	☐ Construction	☐ Construction
		☐ Non Construction	☐ Non Construction
Applicant Information			
Jurisdiction		CT91194 WATERBURY	
City of Waterbury		877983022	
C/O Waterbury Development Corporation			
Waterbury	Connecticut		
06702	Country U.S.A.		
Employer Identification Number (EIN):		New Haven	
06-6001900		7/1	
Applicant Type:		**Specify Other Type if necessary:**	
Local Government: City			
Program Funding		**U.S. Department of Housing and Urban Development**	
Catalogue of Federal Domestic Assistance Numbers; Descriptive Title of Applicant Project(s); Areas Affected by Project(s) (cities, Counties, localities etc.); Estimated Funding			
Community Development Block Grant		14.218 Entitlement Grant	
CDBG Project Titles		Description of Areas Affected by CDBG Project(s)	
$ 1,996,547 CDBG Grant Amount	Additional HUD Grant(s) Levereged	Describe	
$Additional Federal Funds Leveraged		$Additional State Funds Leveraged	
$Locally Leveraged Funds		$Grantee Funds Leveraged	
$12,000 Anticipated Program Income		Other (Describe) $100,000 reprogrammed funds	
Total Funds Leveraged for CDBG-based Project(s)			
Home Investment Partnerships Program		14.239 HOME	
HOME Project Titles		Description of Areas Affected by HOME Project(s)	
$ 709,624 Home Grant Amount	$Additional HUD Grant(s) Leveraged	Describe	
$Additional Federal Funds Leveraged		$Additional State Funds Leveraged	
$Locally Leveraged Funds		$Grantee Funds Leveraged	

$16,300 Anticipated Program Income	Other (Describe)
Total Funds Leveraged for HOME-based Project(s)	

Housing Opportunities for People with AIDS	14.241 HOPWA	
HOPWA Project Titles	Description of Areas Affected by HOPWA Project(s)	
$HOPWA Grant Amount	$Additional HUD Grant(s) Leveraged	Describe
$Additional Federal Funds Leveraged	$Additional State Funds Leveraged	
$Locally Leveraged Funds	$Grantee Funds Leveraged	
$Anticipated Program Income	Other (Describe)	
Total Funds Leveraged for HOPWA-based Project(s)		

Emergency Solutions Grants Program	14.231 ESG	
ESG Project Titles	Description of Areas Affected by ESG Project(s)	
$137,010 ESG Grant Amount	$Additional HUD Grant(s) Leveraged	Describe
$Additional Federal Funds Leveraged	$Additional State Funds Leveraged	
$Locally Leveraged Funds	$Grantee Funds Leveraged	
$Anticipated Program Income	Other (Describe)	
Total Funds Leveraged for ESG-based Project(s)		

Congressional Districts of: CT-003 & CT-005		Is application subject to review by state Executive Order 12372 Process?	
Applicant Districts	Project Districts	☐ Yes	This application was made available to the state EO 12372 process for review on DATE
Is the applicant delinquent on any federal debt? If "Yes" please include an additional document explaining the situation.		☒ No	Program is not covered by EO 12372
☐ Yes	☒ No	☐ N/A	Program has not been selected by the state for review

Person to be contacted regarding this application		
Kevin	M.	DelGobbo
Chief Executive Officer	Phone: 203-346-2607	Fax: 203-346-3910
Email: DelGobbo@wdconline.org	Website: www.wdconline.org	Other:
Signature of Authorized Representative Neil M. O'Leary, Mayor		Date Signed 7/10

CERTIFICATIONS

In accordance with the applicable statutes and the regulations governing the consolidated plan regulations, the jurisdiction certifies that:

Affirmatively Further Fair Housing – The jurisdiction will affirmatively further fair housing, which means it will conduct an analysis of impediments to fair housing choice within the jurisdiction, take appropriate actions to overcome the effects of any impediments identified through that analysis, and maintain records reflecting that analysis and actions in this regard.

Anti-displacement and Relocation Plan -- It will comply with the acquisition and relocation requirements of the Uniform Relocation Assistance and Real Property Acquisition Policies Act of 1970, as amended, and implementing regulations at 49 CFR 24; and it has in effect and is following a residential antidisplacement and relocation assistance plan required under section 104(d) of the Housing and Community Development Act of 1974, as amended, in connection with any activity assisted with funding under the CDBG or HOME programs.

Drug Free Workplace – It will or will continue to provide a drug-free workplace by:

1. Publishing a statement notifying employees that the unlawful manufacture, distribution, dispensing, possession, or use of a controlled substance is prohibited in the grantee's workplace and specifying the actions that will be taken against employees for violation of such prohibition;

2. Establishing an ongoing drug-free awareness program to inform employees about -

   (a) The dangers of drug abuse in the workplace;
   (b) The grantee's policy of maintaining a drug-free workplace;
   (c) Any available drug counseling, rehabilitation, and employee assistance programs; and
   (d) The penalties that may be imposed upon employees for drug abuse violations occurring in the workplace;

3. Making it a requirement that each employee to be engaged in the performance of the grant be given a copy of the statement required by paragraph 1;

4. Notifying the employee in the statement required by paragraph 1 that, as a condition of employment under the grant, the employee will -

   (a) Abide by the terms of the statement; and

   (b) Notify the employer in writing of his or her conviction for a violation of a criminal drug statute occurring in the workplace no later than five calendar days after such conviction;

5. Notifying the agency in writing, within ten calendar days after receiving notice under subparagraph 4(b) from an employee or otherwise receiving actual notice of such conviction. Employers of convicted employees must provide notice, including position title, to every grant officer or other designee on whose grant activity the convicted employee was working, unless the Federal agency has designated a central point for the receipt of such notices. Notice shall include the identification number(s) of each affected grant;

6. Taking one of the following actions, within 30 calendar days of receiving notice under subparagraph 4(b), with respect to any employee who is so convicted -

(a) Taking appropriate personnel action against such an employee, up to and including termination, consistent with the requirements of the Rehabilitation Act of 1973, as amended; or

(b) Requiring such employee to participate satisfactorily in a drug abuse assistance or rehabilitation program approved for such purposes by a Federal, State, or local health, law enforcement, or other appropriate agency;

7. Making a good faith effort to continue to maintain a drug-free workplace through implementation of paragraphs 1, 2, 3, 4, 5 and 6.

Anti-Lobbying -- To the best of the jurisdiction's knowledge and belief:

1. No Federal appropriated funds have been paid or will be paid, by or on behalf of it, to any person for influencing or attempting to influence an officer or employee of any agency, a Member of Congress, an officer or employee of Congress, or an employee of a Member of Congress in connection with the awarding of any Federal contract, the making of any Federal grant, the making of any Federal loan, the entering into of any cooperative agreement, and the extension, continuation, renewal, amendment, or modification of any Federal contract, grant, loan, or cooperative agreement;

2. If any funds other than Federal appropriated funds have been paid or will be paid to any person for influencing or attempting to influence an officer or employee of any agency, a Member of Congress, an officer or employee of Congress, or an employee of a Member of Congress in connection with this Federal contract, grant, loan, or cooperative agreement, it will complete and submit Standard Form-LLL, "Disclosure Form to Report Lobbying," in accordance with its instructions; and

3. It will require that the language of paragraph 1 and 2 of this anti-lobbying certification be included in the award documents for all subawards at all tiers (including subcontracts, subgrants, and contracts under grants, loans, and cooperative agreements) and that all subrecipients shall certify and disclose accordingly.

Authority of Jurisdiction -- The consolidated plan is authorized under State and local law (as applicable) and the jurisdiction possesses the legal authority to carry out the programs for which it is seeking funding, in accordance with applicable HUD regulations.

Consistency with plan -- The housing activities to be undertaken with CDBG, HOME, ESG, and HOPWA funds are consistent with the strategic plan.

Section 3 -- It will comply with section 3 of the Housing and Urban Development Act of 1968, and implementing regulations at 24 CFR Part 135.

Neil M. O'Leary — Date: 1/10/13

Mayor, City of Waterbury

EXHIBIT "C"
CFR Procurement Requirements
24 C.F.R. §84.40 – 84.48

Code of Federal Regulations
Title 24. Housing and Urban Development
Subtitle A. Office of the Secretary, Department of Housing and Urban Development
Part 84. Uniform Administrative Requirements for Grants and Agreements with Institutions of Higher Education, Hospitals, and Other Non--Profit Organizations (Refs & Annos)
Subpart C. Post--Award Requirements
Procurement Standards

24 C.F.R. § 84.40

§ 84.40 Purpose of procurement standards.

Currentness

Sections 84.41 through 84.48 set forth standards for use by recipients in establishing procedures for the procurement of supplies and other expendable property, equipment, real property and other services with Federal funds. These standards are furnished to ensure that such materials and services are obtained in an effective manner and in compliance with the provisions of applicable Federal statutes and executive orders. No additional procurement standards or requirements shall be imposed by HUD upon recipients, unless specifically required by Federal statute or executive order or approved by OMB.

SOURCE: 59 FR 47011, Sept. 13, 1994; 65 FR 30499, May 11, 2000, unless otherwise noted.

AUTHORITY: 42 U.S.C. 3535(d).

Current through January 16, 2014; 79 FR 3039

End of Document

© 2014 Thomson Reuters. No claim to original U.S. Government Works.

Code of Federal Regulations
Title 24. Housing and Urban Development
Subtitle A. Office of the Secretary, Department of Housing and Urban Development
Part 84. Uniform Administrative Requirements for Grants and Agreements with Institutions of Higher Education, Hospitals, and Other Non–Profit Organizations (Refs & Annos)
Subpart C. Post–Award Requirements
Procurement Standards

24 C.F.R. § 84.41

§ 84.41 Recipient responsibilities.

Currentness

The standards contained in this section do not relieve the recipient of the contractual responsibilities arising under its contract(s). The recipient is the responsible authority, without recourse to HUD, regarding the settlement and satisfaction of all contractual and administrative issues arising out of procurements entered into in support of an award or other agreement. This includes disputes, claims, protests of award, source evaluation or other matters of a contractual nature. Matters concerning violation of statute are to be referred to such Federal, State or local authority as may have proper jurisdiction.

SOURCE: 59 FR 47011, Sept. 13, 1994; 65 FR 30499, May 11, 2000, unless otherwise noted.

AUTHORITY: 42 U.S.C. 3535(d).

Current through January 16, 2014; 79 FR 3039

End of Document

© 2014 Thomson Reuters. No claim to original U.S. Government Works.

Code of Federal Regulations
Title 24. Housing and Urban Development
Subtitle A. Office of the Secretary, Department of Housing and Urban Development
Part 84. Uniform Administrative Requirements for Grants and Agreements with Institutions of Higher Education, Hospitals, and Other Non–Profit Organizations (Refs & Annos)
Subpart C. Post–Award Requirements
Procurement Standards

24 C.F.R. § 84.42

§ 84.42 Codes of conduct.

Currentness

The recipient shall maintain written standards of conduct governing the performance of its employees engaged in the award and administration of contracts. No employee, officer, or agent shall participate in the selection, award, or administration of a contract supported by Federal funds if a real or apparent conflict of interest would be involved. Such a conflict would arise when the employee, officer, or agent, any member of his or her immediate family, his or her partner, or an organization which employs or is about to employ any of the parties indicated herein, has a financial or other interest in the firm selected for an award. The officers, employees, and agents of the recipient shall neither solicit nor accept gratuities, favors, or anything of monetary value from contractors, or parties to subagreements. However, recipients may set standards for situations in which the financial interest is not substantial or the gift is an unsolicited item of nominal value. The standards of conduct shall provide for disciplinary actions to be applied for violations of such standards by officers, employees, or agents of the recipient.

SOURCE: 59 FR 47011, Sept. 13, 1994; 65 FR 30499, May 11, 2000, unless otherwise noted.

AUTHORITY: 42 U.S.C. 3535(d).

Current through January 16, 2014; 79 FR 3039

End of Document

© 2014 Thomson Reuters. No claim to original U.S. Government Works.

Code of Federal Regulations
Title 24. Housing and Urban Development
Subtitle A. Office of the Secretary, Department of Housing and Urban Development
Part 84. Uniform Administrative Requirements for Grants and Agreements with Institutions of Higher Education, Hospitals, and Other Non–Profit Organizations (Refs & Annos)
Subpart C. Post–Award Requirements
Procurement Standards

24 C.F.R. § 84.43

§ 84.43 Competition.

Currentness

All procurement transactions shall be conducted in a manner to provide, to the maximum extent practical, open and free competition. The recipient shall be alert to organizational conflicts of interest as well as noncompetitive practices among contractors that may restrict or eliminate competition or otherwise restrain trade. In order to ensure objective contractor performance and eliminate unfair competitive advantage, contractors that develop or draft specifications, requirements, statements of work, invitations for bids and/or requests for proposals shall be excluded from competing for such procurements. Awards shall be made to the bidder or offeror whose bid or offer is responsive to the solicitation and is most advantageous to the recipient, price, quality and other factors considered. The other factors shall include the bidder's or offeror's compliance with Section 3 of the Housing and Urban Development Act of 1968 (12 U.S.C. 1701u), hereafter referred to as "Section 3." Section 3 provides that, to the greatest extent feasible, and consistent with existing Federal, State, and local laws, and regulations, economic opportunities generated by certain HUD financial assistance shall be directed to low- and very low-income persons. Solicitations shall clearly set forth all requirements that the bidder or offeror shall fulfill in order for the bid or offer to be evaluated by the recipient. Any and all bids or offers may be rejected when it is in the recipient's interest to do so.

SOURCE: 59 FR 47011, Sept. 13, 1994; 65 FR 30499, May 11, 2000, unless otherwise noted.

AUTHORITY: 42 U.S.C. 3535(d).

Current through January 16, 2014; 79 FR 3039

Code of Federal Regulations
Title 24. Housing and Urban Development
Subtitle A. Office of the Secretary, Department of Housing and Urban Development
Part 84. Uniform Administrative Requirements for Grants and Agreements with Institutions of Higher Education, Hospitals, and Other Non–Profit Organizations (Refs & Annos)
Subpart C. Post–Award Requirements
Procurement Standards

24 C.F.R. § 84.44

§ 84.44 Procurement procedures.

Effective: January 28, 2008
Currentness

(a) All recipients shall establish written procurement procedures. These procedures shall provide for, at a minimum, that paragraphs (a)(1), (a)(2) and (a)(3) of this section apply.

(1) Recipients avoid purchasing unnecessary items.

(2) Where appropriate, an analysis is made of lease and purchase alternatives to determine which would be the most economical and practical procurement for the Federal Government.

(3) Solicitations for goods and services provide for all of the following.

(i) A clear and accurate description of the technical requirements for the material, product or service to be procured. In competitive procurements, such a description shall not contain features which unduly restrict competition.

(ii) Requirements which the bidder/offeror must fulfill and all other factors to be used in evaluating bids or proposals.

(iii) A description, whenever practicable, of technical requirements in terms of functions to be performed or performance required, including the range of acceptable characteristics or minimum acceptable standards.

(iv) The specific features of "brand name or equal" descriptions that bidders are required to meet when such items are included in the solicitation.

(v) The acceptance, to the extent practicable and economically feasible, of products and services dimensioned in the metric system of measurement.

(vi) Preference, to the extent practicable and economically feasible, for products and services that conserve natural resources and protect the environment and are energy efficient.

(b) Positive efforts shall be made by recipients to utilize small businesses, minority-owned firms, and women's business enterprises, whenever possible. Recipients of Federal awards shall take all of the following steps to further this goal.

(1) Ensure that small businesses, minority-owned firms, and women's business enterprises are used to the fullest extent practicable.

(2) Make information on forthcoming opportunities available and arrange time frames for purchases and contracts to encourage and facilitate participation by small businesses, minority-owned firms, and women's business enterprises.

(3) Consider in the contract process whether firms competing for larger contracts intend to subcontract with small businesses, minority-owned firms, and women's business enterprises.

(4) Encourage contracting with consortiums of small businesses, minority-owned firms and women's business enterprises when a contract is too large for one of these firms to handle individually.

(5) Use the services and assistance, as appropriate, of such organizations as the Small Business Administration and the Department of Commerce's Minority Business

Development Agency in the solicitation and utilization of small businesses, minority-owned firms and women's business enterprises.

(c) The type of procuring instruments used (e.g., fixed price contracts, cost reimbursable contracts, purchase orders, and incentive contracts) shall be determined by the recipient but shall be appropriate for the particular procurement and for promoting the best interest of the program or project involved. The "cost-plus-a-percentage-of-cost" or "percentage of construction cost" methods of contracting shall not be used.

(d) Contracts shall be made only with responsible contractors who possess the potential ability to perform successfully under the terms and conditions of the proposed procurement. Consideration shall be given to such matters as contractor integrity; compliance with public policy, including, where applicable, Section 3 of the Housing and Urban Development Act of 1968 (12 U.S.C. 1701u); record of past performance; and financial and technical resources or accessibility to other necessary resources. In certain circumstances, contracts with certain parties are restricted by implementation of Executive Orders 12549 and 12689, "Debarment and Suspension," at 2 CFR part 2424.

(e) Recipients shall, on request, make available for the Federal awarding agency, pre-award review and procurement documents, such as requests for proposals or invitations for bids, independent cost estimates, etc., when any of the following conditions apply.

(1) A recipient's procurement procedures or operation fails to comply with the procurement standards in HUD's implementation of Circular A–110.

(2) The procurement is expected to exceed $100,000 or the small purchase threshold fixed at 41 U.S.C. 403 (11), whichever is greater, and is to be awarded without competition or only one bid or offer is received in response to a solicitation.

(3) The procurement, which is expected to exceed the small purchase threshold, specifies a "brand name" product.

(4) The proposed award over the small purchase threshold is to be awarded to other than the apparent low bidder under a sealed bid procurement.

(5) A proposed contract modification changes the scope of a contract or increases the contract amount by more than the amount of the small purchase threshold.

Credits
[72 FR 73492, Dec. 27, 2007]

SOURCE: 59 FR 47011, Sept. 13, 1994; 65 FR 30499, May 11, 2000, unless otherwise noted.

AUTHORITY: 42 U.S.C. 3535(d).

Current through January 16, 2014; 79 FR 3039

End of Document

© 2014 Thomson Reuters. No claim to original U.S. Government Works.

Code of Federal Regulations
Title 24. Housing and Urban Development
Subtitle A. Office of the Secretary, Department of Housing and Urban Development
Part 84. Uniform Administrative Requirements for Grants and Agreements with Institutions of Higher Education, Hospitals, and Other Non–Profit Organizations (Refs & Annos)
Subpart C. Post–Award Requirements
Procurement Standards

24 C.F.R. § 84.45

§ 84.45 Cost and price analysis.

Currentness

Some form of cost or price analysis shall be made and documented in the procurement files in connection with every procurement action. Price analysis may be accomplished in various ways, including the comparison of price quotations submitted, market prices and similar indicia, together with discounts. Cost analysis is the review and evaluation of each element of cost to determine reasonableness, allocability and allowability.

SOURCE: 59 FR 47011, Sept. 13, 1994; 65 FR 30499, May 11, 2000, unless otherwise noted.

AUTHORITY: 42 U.S.C. 3535(d).

Current through January 16, 2014; 79 FR 3039

End of Document

© 2014 Thomson Reuters. No claim to original U.S. Government Works.

Code of Federal Regulations
Title 24. Housing and Urban Development
Subtitle A. Office of the Secretary, Department of Housing and Urban Development
Part 84. Uniform Administrative Requirements for Grants and Agreements with Institutions of Higher Education, Hospitals, and Other Non–Profit Organizations (Refs & Annos)
Subpart C. Post–Award Requirements
Procurement Standards

24 C.F.R. § 84.46

§ 84.46 Procurement records.

Currentness

Procurement records and files for purchases in excess of the small purchase threshold shall include the following at a minimum:

(a) Basis for contractor selection;

(b) Justification for lack of competition when competitive bids or offers are not obtained; and

(c) Basis for award cost or price.

SOURCE: 59 FR 47011, Sept. 13, 1994; 65 FR 30499, May 11, 2000, unless otherwise noted.

AUTHORITY: 42 U.S.C. 3535(d).

Current through January 16, 2014; 79 FR 3039

End of Document

© 2014 Thomson Reuters. No claim to original U.S. Government Works.

Code of Federal Regulations
Title 24. Housing and Urban Development
Subtitle A. Office of the Secretary, Department of Housing and Urban Development
Part 84. Uniform Administrative Requirements for Grants and Agreements with Institutions of Higher Education, Hospitals, and Other Non–Profit Organizations (Refs & Annos)
Subpart C. Post–Award Requirements
Procurement Standards

24 C.F.R. § 84.47

§ 84.47 Contract administration.

Currentness

A system for contract administration shall be maintained to ensure contractor conformance with the terms, conditions and specifications of the contract and to ensure adequate and timely follow up of all purchases. Recipients shall evaluate contractor performance and document, as appropriate, whether contractors have met the terms, conditions and specifications of the contract.

SOURCE: 59 FR 47011, Sept. 13, 1994; 65 FR 30499, May 11, 2000, unless otherwise noted.

AUTHORITY: 42 U.S.C. 3535(d).

Current through January 16, 2014; 79 FR 3039

End of Document

© 2014 Thomson Reuters. No claim to original U.S. Government Works.

Code of Federal Regulations
Title 24. Housing and Urban Development
Subtitle A. Office of the Secretary, Department of Housing and Urban Development
Part 84. Uniform Administrative Requirements for Grants and Agreements with Institutions of Higher Education, Hospitals, and Other Non–Profit Organizations (Refs & Annos)
Subpart C. Post–Award Requirements
Procurement Standards

24 C.F.R. § 84.48

§ 84.48 Contract provisions.

Currentness

The recipient shall include, in addition to provisions to define a sound and complete agreement, the following provisions in all contracts. The following provisions shall also be applied to subcontracts.

(a) Contracts in excess of the small purchase threshold shall contain contractual provisions or conditions that allow for administrative, contractual, or legal remedies in instances in which a contractor violates or breaches the contract terms, and provide for such remedial actions as may be appropriate.

(b) All contracts in excess of the small purchase threshold shall contain suitable provisions for termination by the recipient, including the manner by which termination shall be effected and the basis for settlement. In addition, such contracts shall describe conditions under which the contract may be terminated for default as well as conditions where the contract may be terminated because of circumstances beyond the control of the contractor.

(c) Except as otherwise required by statute, an award that requires the contracting (or subcontracting) for construction or facility improvements shall provide for the recipient to follow its own requirements relating to bid guarantees, performance bonds, and payment bonds unless the construction contract or subcontract exceeds $100,000. For those contracts or subcontracts exceeding $100,000, HUD may accept the bonding policy and requirements of the recipient, provided HUD has made a determination that the Federal Government's interest is adequately

WestlawNext © 2014 Thomson Reuters. No claim to original U.S. Government Works.

protected. If such a determination has not been made, the minimum requirements shall be as follows:

(1) A bid guarantee from each bidder equivalent to five percent of the bid price. The "bid guarantee" shall consist of a firm commitment such as a bid bond, certified check, or other negotiable instrument accompanying a bid as assurance that the bidder shall, upon acceptance of his bid, execute such contractual documents as may be required within the time specified.

(2) A performance bond on the part of the contractor for 100 percent of the contract price. A "performance bond" is one executed in connection with a contract to secure fulfillment of all the contractor's obligations under such contract.

(3) A payment bond on the part of the contractor for 100 percent of the contract price. A "payment bond" is one executed in connection with a contract to assure payment as required by statute of all persons supplying labor and material in the execution of the work provided for in the contract.

(4) Where bonds are required in the situations described herein, the bonds shall be obtained from companies holding certificates of authority as acceptable sureties pursuant to 31 CFR part 223, "Surety Companies Doing Business with the United States."

(d) All negotiated contracts (except those for less than the small purchase threshold) awarded by recipients shall include a provision to the effect that the recipient, HUD, the Comptroller General of the United States, or any of their duly authorized representatives, shall have access to any books, documents, papers and records of the contractor which are directly pertinent to a specific program for the purpose of making audits, examinations, excerpts and transcriptions.

(e) All contracts, including small purchases, awarded by recipients and their contractors shall contain the procurement provisions of Appendix A to this rule, as applicable.

SOURCE: 59 FR 47011, Sept. 13, 1994; 65 FR 30499, May 11, 2000, unless otherwise noted.

AUTHORITY: 42 U.S.C. 3535(d).

Current through January 16, 2014; 79 FR 3039

EXHIBIT "D"

List of Current WDC Projects

Waterbury Development Corporation
Current Programs/Projects

Programs/Grants (Project Manager)[1]

Community Development Block Grant (Diane Toolan)
Emergency Solutions Grant (Diane Toolan)
Neighborhood Stabilization Program (Diane Toolan)
Neighborhood Stabilization Program III (Diane Toolan)
HOME (Tina Lubus)
HUD – Neighborhood Initiative Grant (Diane Toolan)
HUD – Economic Development Initiative Grant (Diane Toolan)
DECD Brownfield Study Program (Todd Montello)
DECD Brownfield Municipal Pilot Program (Todd Montello)
EPA 2009 Assessment Grant (Todd Montello)
EPA 2010 Assessment Grant (Todd Montello)
EPA 2012 Assessment Grant (Todd Montello)
EPA Dual Action Grant (Andrew Martelli)

Projects (Project Manager)[1]

East End Public Facility Acquisition Project – Former Mattatuck Manufacturing Site (Andrew Martelli)
Cherry Street Industrial Park Remediation & Redevelopment Project (Todd Montello)
Waterbury Industrial Commons Remediation & Redevelopment Project (Andrew Martelli)
Municipal Stadium Project (Andrew Martelli)
UCONN Acquisition & Redevelopment (The Rectory) Project (Andrew Martelli)
MacDermid Property Acquisition/Public Works Facility Project (Todd Montello – Acquisition Phase/Andrew Martelli – Construction Phase)
Mill Street Abatement, Demolition, Remediation & Reuse Project (Andrew Martelli)
Meadow Street Abatement, Demolition & Reuse Project (Andrew Martelli)
Mad River Development Regional Brownfield Remediation & Reuse Project (Todd Montello)

[1]. The City will be notified immediately, in writing, of PM designation changes.

Place holder for the Curtin Park Renovation Project Authorization Letter between the City of Waterbury and the Waterbury Development Corporation. This Project Authorization Letter is an agenda item on the October 19, 2026 Board of Aldermen Meeting.

Attachment R

CURTIN PARK RESTORATION

DESCRIPTION OF WORK	BUDGET COST	Grant	City Match
DEMO AND SURVEYING			
Mobilization and Demobilization (Site contractor)	$ 11,375.00	$ 5,687.50	$ 5,687.50
Surveying & Layout	$ 12,375.00	$ 6,187.50	$ 6,187.50
Clearing & Grubbing 2,800 sq ft	$ 88,375.00	$ 44,187.50	$ 44,187.50
Demo and disposal of tennis courts	$ 68,375.00	$ 34,187.50	$ 34,187.50
Removal of fences in the existing tennis courts (LF)	$ 12,955.00	$ 6,477.50	$ 6,477.50
Removal of fence around the park, except on behind the baseball field and north fence	$ 17,390.93	$ 8,695.47	$ 8,695.47
Demo and disposal of entry asphalt	$ 18,121.16	$ 9,060.58	$ 9,060.58
Cleaning site garbage debris	$ 9,875.00	$ 4,937.50	$ 4,937.50
Subtotal Demo and Surveying	*$ 238,842.09*	**$ 119,421.05**	**$ 119,421.05**
RESTORATION WORK			
Removal and installation of 2 new swings, including safety surface (wood fiber)	$ 20,375.00		$ 20,375.00
Re-surface 2 basketball courts	$ 58,375.00		$ 58,375.00
Splash pad - modify activation post to ground mount due to continued vandalism	$ 11,375.00		$ 11,375.00
Ball field restoration - allowance	$ 23,375.00		$ 23,375.00
Existing Light pole rework	$ 15,375.00	$ 15,375.00	
Existing storm drainage - rework and cleaning	$ 12,375.00	$ 12,375.00	
Existing bridge restoration & railings	$ 18,375.00	$ 18,375.00	
Driveway entrance 20x60=1200SF	$ 16,875.00	$ 16,875.00	
Drinking fountain	$ 11,375.00	$ 11,375.00	
Subtotal Restoration Work	*$ 187,875.00*	**$ 74,375.00**	**$ 113,500.00**
NEW CONSTRUCTION			

4" asphalt Walking path - 10 ft wide - 2" binder & 2" surface (sq ft)		$	99,675.00	$	49,837.50	$	49,837.50
New fence around the basketball courts - 2 sides (LF)		$	26,855.00			$	26,855.00
	estanding outdoor entrance sign 5 ft wide x 6 feet tall, installed	$	22,375.00				
				$	11,187.50	$	11,187.50
	12 ft Steel swing-style, powder-coated barrier gate - installed	$	20,375.00				
						$	20,375.00
	Steel heavy duty municipal goal, net and installation	$	14,575.00				
						$	14,575.00
5' tall Galvanized Chain link fence - 1,800 lf - installed		$	26,883.00			$	26,883.00
Metal picnic tables		$	19,125.00	$	9,562.50	$	9,562.50
	6' metal bench	$	58,475.00				
				$	29,237.50	$	29,237.50
	Dual 20 gal trash can	$	39,375.00				
				$	19,687.50	$	19,687.50

Seeding of 20,000 sf (tennis courts) - Rough grading, compaction - 370CY of topsoil - fine grading & seedbed prep - seed and fertilizer	$	58,375.00	$	58,375.00		
Landscape & seeding 30,000 sf, top soil 550 yard (allowance)	$	65,375.00	$	65,375.00		
Subtotal New Construction	*$*	*451,463.00*	**$**	**243,262.50**	**$**	**208,200.50**
Subtotal of demolition & surveying, restoration, and new construction			**$**	**437,058.55**	**$**	**441,121.55**
Subtotal	**$**	**878,180.09**				
Owner's Contingency (10%)	$	121,688.71	$	60,844.36	$	60,844.36
Total Hard Cost - Rough Estimate	**$**	**999,868.80**	**$**	**497,902.90**	**$**	**501,965.90**
Architect / Engineering drawings & specs (10%)	$	99,986.88	$	49,993.44	$	49,993.44
BUDGET GRAND TOTAL	**$**	**1,099,855.68**	**$**	**547,896.34**	**$**	**551,959.34**

Attachment S

Attachment S Resolution Placeholder

Attachment U

Parks and Recreation

The City's parks and recreation system have undergone a transformation over the last decade. The Bureau of Parks is responsible for the daily maintenance and upkeep of the City's 34 parks, and athletic fields at the Middle and High Schools. The City also maintains two public golf courses. Three new parks have been added over the last decade: George Tirado, Sr. Park, Lt. Vincent Riddick Park, and Platt Park. Two projects involved the conversion of derelict sites into community assets, while the third created a river access for the new Naugatuck River Greenway.

In addition to new parks, the City has made substantial renovations at existing parks. New pools were built at Hamilton Park, Washington Park, and Fulton Park, fields and locker rooms at Municipal Stadium were renovated, The Green and Library Park in Downtown Waterbury were renovated, eight new playscapes and numerous playground upgrades were made, new courts were installed at Murray Park and Waterville Park, and new roofs were installed at the River Baldwin and Chase Park Recreation Centers. These investments have improved quality of life throughout the City.

With substantial investments made over the last decade, the City intends to focus on park maintenance and rehabilitation projects over the next decade. Planned improvements include continued upgrades to Hamilton Park, court and field replacements, and roof replacements at recreation centers.

In addition to public parks and recreation centers, the City is also home to numerous private facilities that also meet community needs, such as the Police Activity League, Greater Waterbury YMCA, the Boys & Girls Club, Girls, Inc., and the Country Club of Waterbury.



Renovated Hamilton Park Pool



George S. Tirado Sr. Park was built on a the site of Nova Die, a brownfield site in the CIty's South End neighborhood.
Source: NVCOG



Platt Park connects Phase 1 of the Naugatuck River Greenway trail to the river in the City's Platts Mill neighborhood.

3. **Align City Services to Shifting Demographics and Growing Population**
    - Explore opportunities to expand program space at the Waterbury Senior Center to meet growing demand for services.
    - Address capital needs and programmatic needs at Silas Bronson Library.
    - Expand access to language translation for key City services.

4. **Maintain and Improve the Public Parks System**
    - Continue to complete upgrades to Hamilton Park, using a phased approach.
    - Rehabilitate and maintain existing parks, playgrounds, recreation centers, and golf courses.
    - Continue to make accessibility improvements to City parks and playgrounds to ensure that they are accessible to all.
    - Continue to plan for the future Jackson Street Park as part of redevelopment efforts in the Freight Street District.
    - As part of greenway planning and design efforts, incorporate river access and pocket parks into the greenway system, where feasible.





Fire Station 1 (left) is currently undergoing a major renovation and is one of several upgrades planned at public safety facilities over the next decade. The historic Chase Building (right) will undergo a renovation allowing it to continue to serve as important office space for the City and Board of Education.

Attachment V

9. Open Space

This component of the Plan is intended to recommend the preservation of open space areas of regional significance that can:

- Enhance regional character and quality of life.
- Preserve lands for parks and recreational uses.
- Conserve important natural resources.
- Provide fiscal and economic benefits.
- Shape development patterns.

Current Conditions

Open space is defined as land that is preserved or restricted for park, recreation, cemetery, or conservation use. This definition varies from the perception of many residents that undeveloped land is "open space" even though it may be developed at a future time. About 16 percent of the entire region's land area is some type of open space. Of this, 84 percent is committed open space owned by water companies, land trusts, government entities, cemeteries, and private organizations such as clubs. The remainder of the open space, 16%, is not committed to preservation. These percentages do not include undeveloped private land, but do include municipally owned land used as open space but not permanently protected.

Within the state, the proportion of open space varies by the type of municipality. As the 2005 Statewide Comprehensive Outdoor Recreation Plan (SCORP) states, smaller towns (Beacon Falls and Thomaston) have much larger amounts of recreational acreage than either urban centers (Waterbury) or towns near urban municipalities (Naugatuck), the two municipal categories with the least amount of recreational acreage. All remaining municipalities in the CNVR are classified by SCORP as suburban, the category which has the second largest recreational acreage.

Acquisition of open space is strongly supported by the citizens of Connecticut. The Department of Environmental Protection (DEP) alone owns 66% of the total recreational acreage in the state. While the largest unmet need of Connecticut households reported by the SCORP plan is for multi-use trails, 85% of all households use some type of water-based recreation, and the acquisition of water-based recreational properties is DEP's highest priority.

In its draft *Green Plan*, which identifies sensitive types of ecological areas and unique features that merit protection, DEP's vision is stated as providing:

> *A diverse landscape of protected open space that offers outdoor recreation to Connecticut's citizens, protects water supplies, preserves natural communities and habitats for plants and animals, offers green spaces accessible to all residents, whether residing in urban, suburban or rural communities, and provides a working natural landscape for the harvest of farm and forest products.*



Flander's Nature Center, Woodbury

Table 9.1 Open Space in the CNVR, by Municipality: 2006

Town	Federal	State	Municipal	Private*	Cemetery	Land Trusts	Golf Courses	Water Company	Total
	Committed Open Space (Acres)								
Beacon Falls	0	1,181	259	0	3	42	0	21	1,506
Bethlehem	0	4	149	0	8	391	0	206	758
Cheshire	0	316	1,441	297	20	470	0	1,426	3,970
Middlebury	229	28	0	57	4	881	0	113	1,312
Naugatuck	2	1,009	27	0	118	27	0	235	1,418
Oxford	0	1,233	551	0	12	25	0	0	1,821
Prospect	0	1	88	0	3	78	0	2,198	2,368
Southbury	0	1,202	1,155	944	20	767	0	6	4,094
Thomaston	573	723	172	0	60	0	0	289	1,817
Waterbury	261	409	253	27	329	0	0	0	1,279
Watertown	62	1,877	649	28	178	145	0	648	3,587
Wolcott	0	0	0	0	5	0	0	833	838
Woodbury	0	0	152	785	30	1,667	0	397	3,031
CNVR	1,127	7,983	4,896	2,138	789	4,493	0	6,372	27,799
	Uncommitted Open Space (Acres)								
Beacon Falls	0	0	0	56	0	0	0	0	56
Bethlehem	0	0	21	307	0	0	0	0	328
Cheshire	0	0	0	36	0	0	34	0	70
Middlebury	0	9	311	25	0	0	453	0	798
Naugatuck	0	0	165	2	0	0	73	227	467
Oxford	0	0	273	376	0	0	0	38	687
Prospect	0	0	20	0	0	0	33	217	270
Southbury	0	0	0	0	0	0	238	0	238
Thomaston	0	0	53	23	0	0	0	0	76
Waterbury	0	0	377	42	0	0	492	56	967
Watertown	0	0	32	49	0	0	186	79	346
Wolcott	0	0	204	299	0	0	81	0	584
Woodbury	0	0	401	0	0	73	0	0	474
CNVR	0	9	1,857	1,215	0	73	1,590	617	5,361
Total	1,127	7,992	6,753	3,353	790	4,566	1,590	6,989	33,160

Note: *Included Audubon land, Roxbury land trust, easements, homeowner's associations, etc

Source: COGCNV Staff with assistance from municipalities and local land trusts

Figure 9.1. Open Space
Central Naugatuck Valley

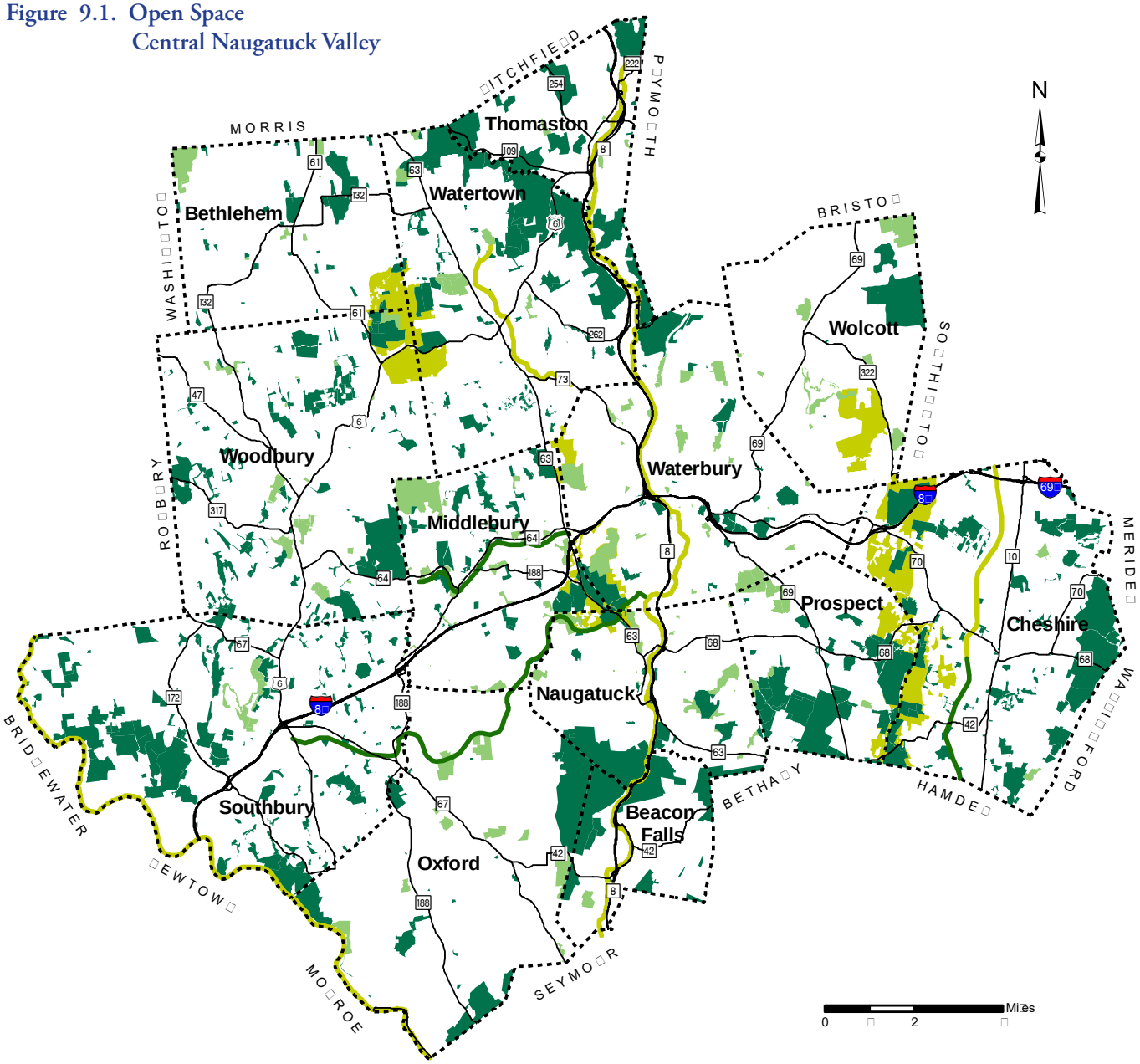

Proposed Open Space Action Areas and Greenways
- This does not include detailed planning by town or land trust.

Preserved Open Space
- This includes protected federal, state, municipal, private, cemetery, land trust, and water company Class I and II land.

Other Open Space
- This includes unprotected state, municipal, private and land trust lands, golf courses, and water company Class III land.

Major Roads

Municipal Boundary

Source: COGCNV staff with assistance from municipalities and local land trusts

For DEP, the goal is:

> *To continue to acquire and protect land to satisfy a variety of needs as expressed in Connecticut General Statutes 23-8(b) and in various State plans, including the* ***Conservation and Development Policies Plan of Connecticut 2005-2010*** *and to support local and regional plans, where available."*

The acquisition tools available to DEP are the Recreation and Natural Heritage Trust Program and the Open Space and Watershed Land Acquisition Grant Program.

Major Recommendations

Protect more open space in the region.

In 1998, the State set a goal of 21% of the total land area, or 673,210 acres, to be preserved as open space by 2023 with 10% by the state and 11% by municipalities, water companies, and conservation organizations. As of January 2005, 78% percent of the state goal and 65% of the non-state goal have been met. These goals compete with housing, commercial, industrial, and other land uses for diminishing available land.



Fulton Park, Waterbury

Recommendations

1. Encourage activities to identify and preserve important open space areas before they are threatened by development.
2. Retain existing private open space through public acquisition, use of open space requirements in subdivision regulations, easements, or other means.
3. Assist the state, municipalities, and land trusts in their efforts to meet the state's open space goal.

Coordinate and prioritize open space preservation throughout the region.

In addition, efforts at preserving open space should not simply be directed to acquiring a certain percentage of land as open space. Instead, efforts should be devoted to creating a meaningful open space system with priority given to the establishment of greenways, open space connections, and the preservation of visible parcels (ridgelines, scenic view areas, steep slopes, agricultural land, and historical or archeological sites). Some municipalities and organizations, such as the Southbury Land Trust, are working to prioritize land for preservation.

Recommendations

1. Maximize the benefits of open space by giving priority to:
   - Establishment of greenways (for wetland protection and wildlife habitat), open space connections (including trails and wildlife corridors), and forests.
   - Multi-purpose areas.
   - Preservation of visible parcels (ridgelines, scenic view areas, steep slopes, and historical or archeological sites).
   - Protection of water resources and lands which protect water quality.
2. Address the difficulty of providing adequate open space in urban areas by:
   - Providing small public greens and "pocket parks".
   - Enhancing and upgrading existing public greens.
   - Promoting street tree programs.
3. Where feasible, encourage creation of:
   - Multi-purpose trail systems (pedestrian, bicycle, bridle, cross-country ski, as appropriate) that link recreational and open space areas.

- Pedestrian and bike paths that link residential, retail, and employment areas.

4. Work to coordinate open space preservation with forests, agriculture, and lands with minimum land use impacts.

Focus efforts on obtaining sites for water-based recreation.

One of the region's most pressing recreational needs is water access to local rivers and lakes, especially new beaches. Lake Quassapaug, the Naugatuck River, and the Quinnipiac River are examples of major water resources in the region that do not have major public access.

Recommendations

1. Encourage efforts to address the region's needs for access to local rivers and lakes, especially new beaches.

Preserve declassified water company land as open space.

Some of the land that residents may believe is protected as open space is at risk. Almost 10%, over 3,400 acres, of the region's total existing open space is in private ownership (such as water companies, golf courses, private clubs) and is not permanently committed open space. Some of this land, as well as some municipal holdings, could potentially be developed in the future. In addition, many people believe that agricultural land registered under Public Act 490 protects open space, when, in fact, it only enables the property owner to feel less pressure to sell immediately. It does not preserve land long term.

Recommendations

1. Work with local communities including land trusts, the state, and other organizations such as the Trust for Public Land and Connecticut Farmland Trust to preserve land, especially Class III and other watershed lands, as open space and/or potential future water supply sources.
2. Undertake education programs on the fiscal benefits of open space protection and use of Public Act 490.



Middlebury Greenway on Route 64, Middlebury

Secondary Recommendations

Encourage use of a broad range of tools to protect open space.

While open space preservation has been shown to be a cost-effective investment for many communities, public acquisition is not the only method available. Open space can also be preserved through the activities of private land trusts, settlement patterns (cluster development), purchase of development rights, transfer of development rights, easements, or other methods. Where public open space protection is desirable and identified, it can be facilitated through the annual budgeting of funds, bonding, or fees in lieu of open space in subdivisions.



Lake Quassapaug, Middlebury



Nonnewaug Falls, Woodbury

Recommendations

1. Promote open space preservation in the region by public and private agencies.
2. Assist local land trusts and other non-profit organizations (such as the Connecticut Land Alliance, Flander's Nature Center, Southbury Land Trust, Prospect Land Trust, etc.) that preserve open space in the region.
3. Encourage communities to budget funds each year for open space acquisition, to aggressively seek open space acquisition grants, and to require open space set-asides in subdivisions.
4. Encourage communities in the region to inventory their preserved open space.
5. Encourage communities to use land use techniques that promote open space protection, such as:
   - Open space set-asides in residential subdivisions.
   - Cluster-type residential developments.
   - Ridgeline protection provisions within zoning regulations.
   - Transfer of development rights.
   - Other flexible land use regulations.

Manage open space effectively to maximize benefits.

Open space should be accessible to all residents of the region. People dependent on public transportation will need open space near bus routes. The Americans with Disabilities Act requires public facilities to provide equal opportunities to all persons to participate in activities. At the same time, each facility must be managed to prevent unwanted damage (such as soil erosion, trampled vegetation, litter, or fires). Lower income people may need facilities without admission fees. The SCORP points out the need for additional parking, improved restrooms, shelters, and other accessibility issues at many public open space areas.

Recommendations

1. Encourage appropriate access to open space and recreational facilities for all residents of the region.
2. Encourage appropriate activities in open space areas to avoid unwanted damage, such as soil erosion, trampled vegetation, litter, fires, and ensure proper management.

Encourage efforts to preserve open space action areas, critical environmental areas, and areas threatened by development.

The following areas are recommended for consideration by the region's municipalities in determining priorities in recreation and open space lands. Many of these proposals were identified in the 1963, 1977, and 1998 Regional Plans.

1. Water-Based Recreational Sites — locate and preserve sites for water-based recreation, especially access points for boating, fishing, or swimming. This may include acquisition of existing watershed lands and reservoirs being considered for abandonment, sites along the Naugatuck, Quinnipiac, Pomperaug or Housatonic Rivers, or other water bodies such as Lake Quassapaug.
2. Greenways (region-wide) — create, extend, and enhance greenways in the region, especially along river corridors (such as the proposed greenway along the

Naugatuck River in Waterbury, the Housatonic River in Southbury, the Quinnipiac River in Cheshire, Steele Brook in Watertown and Waterbury, and the Pomperaug River in Southbury and Woodbury).

3. Recreation Trails (region-wide) — protect, create, extend, and enhance recreational trails throughout the region, the Farmington Canal trail in Cheshire, the trolley line trail in Middlebury, and the Larkin Bridle Trail in Middlebury, Oxford, and Southbury. Encourage the preservation of trail corridors maintained by the Connecticut Forest and Park Association and other groups.
4. Ridgelines — Assist the region's communities in protecting ridgeline areas.
5. Other Recommended Action Areas — In 1967, the Regional Planning Agency of the Central Naugatuck Valley proposed seven open space action areas (see Figure 9.1). One of these, the Lake Quassapaug Action Area, has largely been protected through the efforts of the Flander's Nature Center in Woodbury. Regionwide, over 5,290 acres within the action areas remain available for development and almost 2,940 acres have been preserved.
   - Expand the existing open space preserve at the Nonnewaug Falls area in Bethlehem, Watertown, and Woodbury (Figure 9.2).
   - Create a major open space area near Straits Turnpike in Waterbury, Middlebury, and Watertown (Figure 9.3).
   - Improve access to existing facilities in the Hop Brook area (Middlebury, Naugatuck, Waterbury) containing 703 acres of existing open space (Figure 9.4).
   - Create a major community and regional open space area in Wolcott as recommended in Wolcott's 1973 Plan of Development (Figure 9.5).
   - Enhance existing open space (477 ac.) preserved by the Town of Cheshire with additional lands near I-84 and Route 70 (Figure 9.6).
   - Enhance existing open space on Peck Mountain in Cheshire and Prospect (1,160 ac.) with acquisition of watershed lands or other lands (Figure 9.7).



Volunteer Park, Beacon Falls

While these areas represent resources of potential regional significance due to their size or location, additional open space preservation efforts at the local level and the state level will also be important to the region.

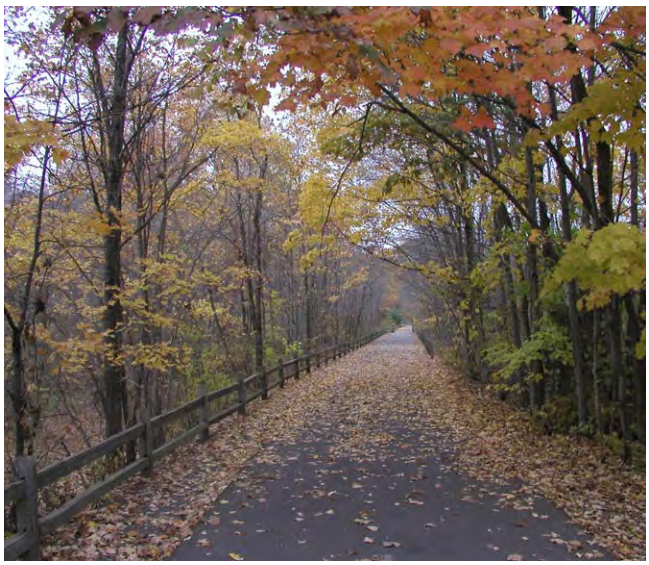

Farmington Canal, Cheshire

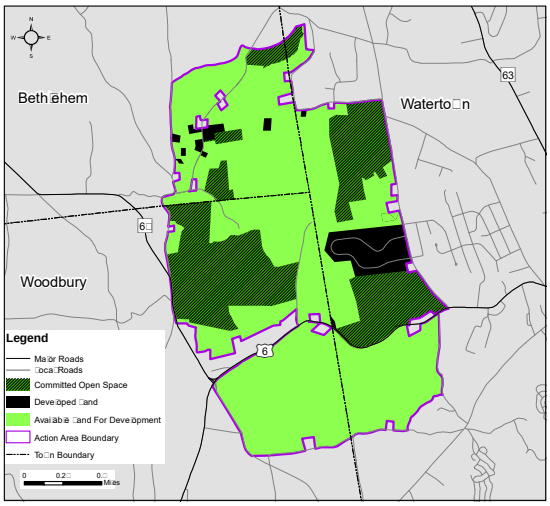

Figure 9.2 Nonnewaug Falls Open Space Action Area

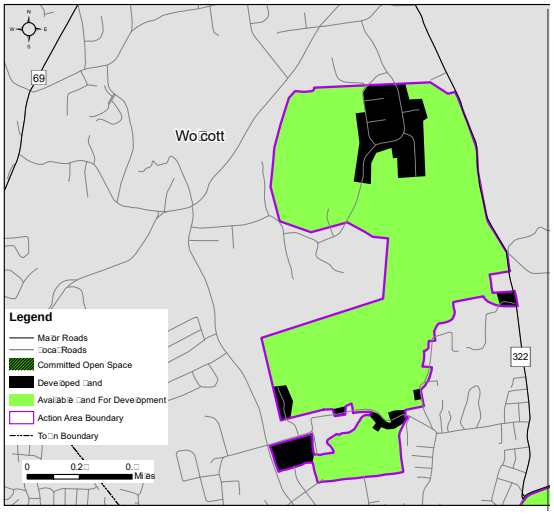

Figure 9.5 Boundline Road Open Space Action Area

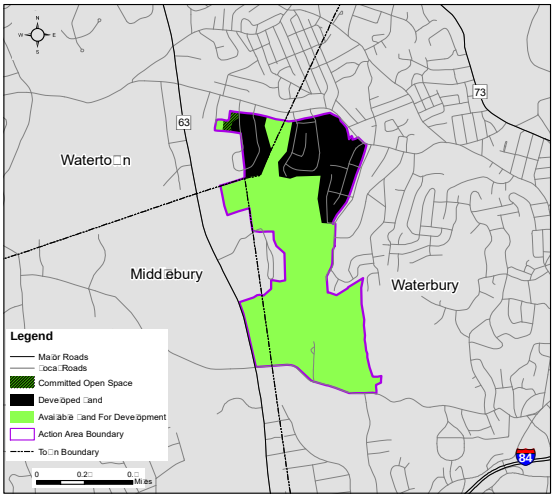

Figure 9.3 Straits Turnpike Open Space Action Area

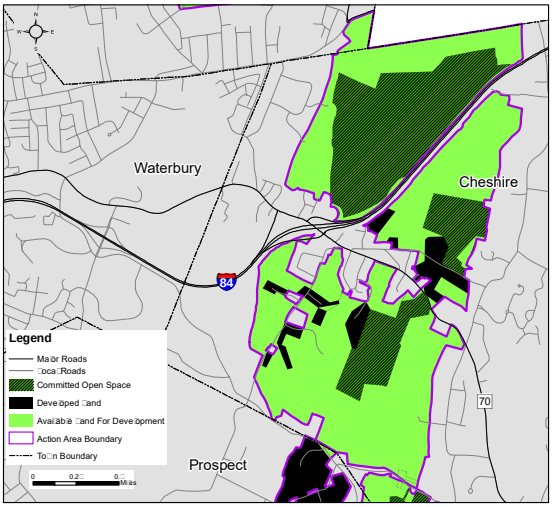

Figure 9.6 I-84 Connecticut Route 70 Open Space Action Area

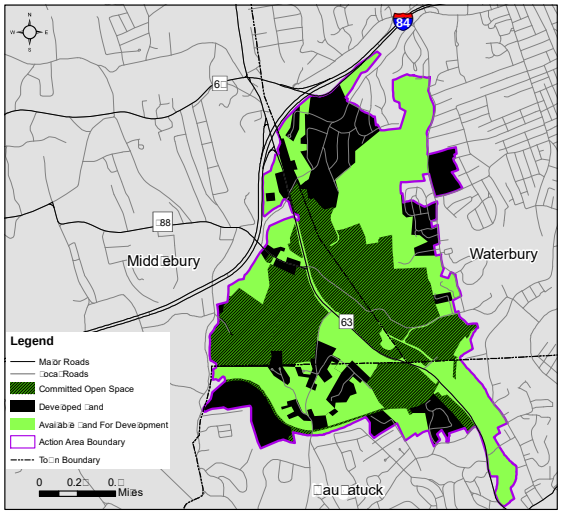

Figure 9.4 Hop Brook Open Space Action Area

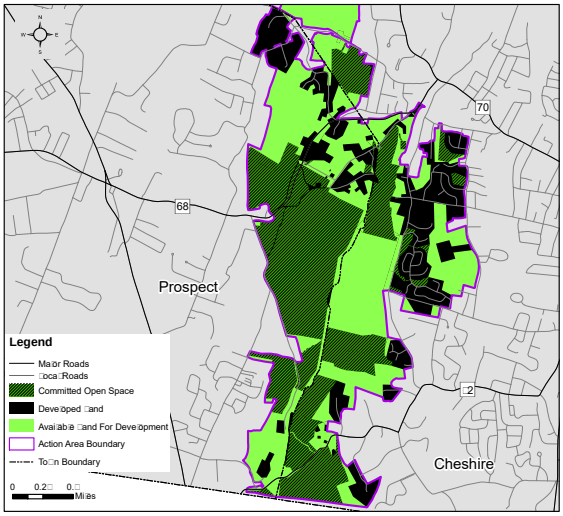

Figure 9.7 Peck Mountain Open Space Action Area

Conceptual Plan



WATERBURY

CURTIN PARK FIELD

CONCEPTUAL VIEW

Curtin Park Photos

Curtin Park Photos



Drone Photo taken August 31, 2026



Drone Photo taken August 31, 2026



Drone Photo taken August 31, 2026



Drone Photo Taken August 31, 2026



August 3, 2026 taken from Spring Brook Road Entrance showing the asphalt to be removed, gate and fencing to be replaced, and vegetation to be trimmed or removed.



August 3, 2026



August 3, 2026



August 3, 2026 showing the trees growing in the tennis courts both of which will be removed.



August 3, 2026 Showing the tennis courts and basketball courts



August 3, 2026 showing the tennis courts to be removed



August 3, 2026 showing the basketball courts to be resurfaced



August 3, 2026 showing the overgrown area and entrance at the bridge to the park



August 3, 2026 showing the baseball field



August 3, 2026

OFFICE OF THE DIRECTOR OF FINANCE

THE CITY OF WATERBURY

CONNECTICUT

Date: October 8, 2026

To: Michael DiGiovancarlo,
President, Board of Aldermen

Members, Board of Aldermen
Mayor Paul K. Pernerewski, Jr.

From: Michael LeBlanc, Director of Finance MJL

Subject: 320 East Main Street Parking Lot Use License Agreement with Kaybar Development II, LLC

Kindly give favorable consideration by approving the attached License Agreement with Kaybar Development II, LLC allowing the City the exclusive right to use all of approximately twenty-seven spaces located at Licensor's parking lot at 320 East Main Street at an annual license fee of $1.00.

This License Agreement would allow the Police Department to continue using the parking lot on an everyday basis for employee parking and overflow visitor parking for one-year with the possibility for a longer duration on a month-to-month basis.

Kaybar Development II, LLC recently closed on the acquisition of 55 Cole St. (the former St. Mary's Elementary School Complex) and 320 East Main Street at a purchase price of $1,600,000. The redevelopment project, known as Cole Street Commons, will transform the long-vacant, historic property at 55 Cole Street into a residential community featuring forty-seven (47) new workforce apartments as part of the Phase I development.

The Project also has the potential for a second phase on the above referenced 320 East Main Street parcel. Subject to available funding, Phase II could include an additional 40 apartments as a ground-up development on the adjacent 320 East Main Street vacant parcel for middle-income affordable housing, along with additional community amenities.

LICENSE AGREEMENT

THIS LICENSE made effective the ____ day of September, 2026 by and between **Kaybar Development II, LLC.,** located at 20 East Main Street, Waterbury, CT 06702 (hereinafter "Licensor") and the **CITY OF WATERBURY,** a municipality organized and existing under the laws of the State of Connecticut, and located at 235 Grand Street, Waterbury, CT 06702 (hereinafter "Licensee").

WITNESSETH:

1. **SCOPE OF LICENSE:**

In consideration of the covenants herein stipulated to be performed by Licensee, Licensor hereby grants to Licensee the exclusive right to use all approximately twenty-seven spaces located at Licensor's parking lot at 320 East Main Street. The Premises subject to this License Agreement is a parking area fronting on and accessed from East Main Street at 320 East Main that goes back to a wall which divides the Premises from those parking lots that service a different portion of the overall property also owned by the licensor but not part of this Agreement and that are instead accessed from Cole Street. Licensee's exclusive use of the parking is limited to providing Licensee's Police Station located at 255 East Main Street in Waterbury with employee parking and overflow visitor parking. Such parking lot and the driveway and sidewalks adjacent to it are hereafter called the "Premises".

2. **TERM:**

A. Licensee shall use the Premises on an everyday basis beginning October 1, 2026 for one year. Any holdover use of the Premises beyond the expiration of this term shall require Licensor's prior written consent and shall be on a month-to-month basis, terminable by either party upon one (1) week written notice.

B. Notwithstanding the foregoing, Licensor retains the right to utilize the entire

parking lot as needed. Licensor will post a sign at the entrance of the Premises indicating that

the Premises are closed to visitors. In the event of a conflict, Licensor's use shall prevail.

C. Right to terminate. Either party has the right, without cause, to terminate this agreement upon providing the other party with at least one (1) week prior written notice. In the event that such notice is given, the parties shall remain responsible for all of their obligations under the License Agreement through the termination date and Licensee shall remain obligated for any property tax liability arising as the result of its use.

3. **FEES:**

Licensee shall pay to Licensor a nominal annual license fee of One Dollar ($1.00) in connection with its use of the Premises. Additionally, Licensee shall be responsible for any increase in property taxes, assessments, or similar charges attributable to its use of the Premises.

4. **TITLE:**

Licensor represents that it owns the Premises in fee simple subject to zoning and building regulations, restrictions, rules and ordinances and to all other ordinances now in effect as adopted by any governmental authority having jurisdiction of the Premises and to encumbrances as of record appear, and that it has **full** power and authority to license the Premises to Licensee on the terms set forth herein.

5. **USE OF PREMISES:**

Licensee, during the term of this License, shall occupy and use the Premises solely for parking for its employees and visitors.

6. **CONDITION OF PREMISES:**

Licensee accepts and licenses the Premises in an "As Is" condition.

7. **MAINTENANCE:**

A. Licensee shall, for its own use and benefit and during the term of this License or any holding over by Licensee, keep the parking area, located on the Premises free and clear of snow and sanded and salted within a reasonable period of time after precipitation has stopped falling. Licensor shall owe no duty to Licensee to clear the Premises of snow and ice or to maintain the Premises in any manner. Licensee shall clear snow from and salt the Premises and take all other maintenance steps necessary or prudent in connection with its use of the Premises. This paragraph shall not be interpreted to require the City to be responsible for paving the parking lot on the Premises.

B. Licensor and Licensee expressly agree that Licensor is not responsible for providing security for or to the Premises, the parking spaces, the paths, sidewalks and driveway leading to and from the Premises used by Licensee or its agents, employees, visitors, invitees, or licensees.

8. INDEMNIFICATION:

Notwithstanding the insurance coverage set forth in Section 9 below, each party shall be solely responsible for their own acts or omissions, including those of its agents, officers, employees and independent contractors, for and against all losses and liabilities including any resulting expenses and costs, without limitation, resulting from this Agreement. Each party shall indemnify, defend, and hold harmless the other party from and against any and all claims, damages, losses, costs, and expenses (including reasonable attorneys' fees) arising out of or related to the obligations of the parties under this License or the acts or omissions of each party, its agents, officers, employees, visitors, or invitees on the Premises. Under no circumstances shall Licensor be responsible for any damage or theft caused to any vehicles parked in or on the Premises during the term of this Agreement or any holdover by licensee,

unless damage is caused by intentional act of Licensor

9. INSURANCE:

Throughout the term of this License and any extensions thereof, Licensee shall maintain public liability insurance covering the Premises providing for single limit coverage of at least Two Million Dollars ($2,000,000.00) with One Million Dollars in excess coverage. Licensee's insurance policy(ies) shall name the Licensor as an additional insured, and Licensee shall annually and at such other times as Licensor may request, provide Licensor with a certificate evidencing said insurance. All of the foregoing insurance shall be issued by insurers of recognized responsibility authorized to do business in the State of Connecticut.

Throughout the term of this License and any extensions thereof, Licensor shall also maintain its own public liability insurance covering the Premises providing for similar coverage as stated above and will add the City as an additional insured. The Licensor shall provide Licensee with a certificate evidencing said insurance upon request.

10. ASSIGNMENT AND SUBLETTING:

Licensee may not sublet the Premises or any portion thereof and may not assign all or any part of its rights and interests hereunder.

11. DEFAULT PROVISIONS:

a. Any of the following occurrences or acts shall constitute an event of default under this License:

i. If Licensee, at any time during the term of this License, shall fail to observe or perform any of Licensee's other covenants, agreements, or obligations hereunder, or

ii. If any other event of default occurs as defined elsewhere in this License.

b. Remedies:

i. Upon the occurrence of any event of default, then or at any time thereafter while any such event of default shall continue, Licensor shall have the right at its election to terminate this License; and, in the event of such termination, all right, title and interest of Licensee hereunder shall thereupon expire and Licensee shall then peaceably and quietly quit the Premises and surrender the same to Licensor.

ii. In the event of any termination of this License as in this Paragraph or as otherwise permitted by law, Licensor may enter upon the Premises, and again have, repossess and enjoy the same as if this License had not been made, and in any such event, neither Licensee nor any person claiming through or under Licensee by virtue of any statute or of an order of any court shall be entitled to possession or to remain in possession of the Premises but shall forthwith quit and surrender the Premises.

12. ADDITIONAL RIGHTS OF LICENSOR:

No right or remedy herein conferred upon or reserved to Licensor is intended to be exclusive of any other right or remedy, and each and every right and remedy shall be cumulative and in addition to any other right or remedy given hereunder, or now or hereafter existing at law or in equity or by statute. The failure of Licensor to insist at any time upon the strict performance of any of the covenants or agreements or to exercise any option, right, power or remedy contained in this License shall not be construed as a waiver of or relinquishment thereof for the future.

13. NOTICES, DEMANDS AND OTHER INSTRUMENTS:

All notices, demands, requests, consents, approvals, undertaking and other instruments required or permitted to be given pursuant to the terms hereof shall be in writing and shall be deemed to have been properly given if served personally to the representative of the Licensee identified in the first paragraph of this License Agreement, or if sent by certified United States mail, postage prepaid, return receipt requested, as follows:

As to Licensee:	City of Waterbury Police Department 255 East Main Street Waterbury, CT 06702 Attn: Police Chief
	City of Waterbury Finance Director 235 Grand Street Waterbury, CT 06702
As to Licensor:	KayBar Development II LLC 20 East Main Street Waterbury, CT 06702 Attn: Joe Gramando

Licensor or Licensee shall, from time to time, have the right to specify as its proper address for the purposes of this License any other address upon giving written notice thereof to the other party.

14. SURRENDER:

Upon the expiration or sooner termination of this License, Licensee shall peaceably and quietly leave, yield up and sun-ender the Premises to Licensor in no worse condition than same were in when received from the Licensor at the commencement of the term of this License.

15. CONNECTICUT LAW:

This license shall be governed by, construed and enforced in accordance with, the laws of the State of Connecticut.

16. LICENSE CONTAINS ALL AGREEMENTS:

This License contains all of the covenants, agreements, terms provisions and conditions relating to the licensing of the Premises hereunder, and Licensor has not made and is not making, and Licensee, in executing and delivering this License, is not relying upon any warranties, representations, promises or statements except to the extent that same may be expressly set forth in this License.

17. LICENSE NOT TO BE RECORDED:

This License shall not be recorded on any Land Records. If Licensee should cause this License to be recorded on any Land Records, same shall constitute an act or event of default, and in that event, all of the rights under this License shall immediately and automatically be terminated.

18. ATTORNEYS' FEES:

In the event that either party to this License defaults on any obligation, the defaulting party shall pay to the non-defaulting party any and all reasonable expenses incurred in enforcing the provisions of this License, including reasonable attorneys' fees.

The remainder of this page is intentionally blank.

IN WITNESS WHEREOF, Licensor and Licensee have executed this License effective as of the date and year first hereinabove written.

As to Licensor:

_____

_____

KAYBAR DEVELOPMENT II, LLC.

By: _____
Joseph Gramando
Its Member, duly authorized

As to Licensee:

_____

_____

LICENSEE: CITY OF WATERBURY

By: _____
Paul K. Pernerewski, Jr.
Mayor, City of Waterbury
Its Mayor, duly authorized

KELLY ZIMMERMANN
MINORITY LEADER – 3RD DISTRICT
ALDERMAN – 2nd DISTRICT

Item #: _____
For City Clerk or Board of Alder President



CO-FILERS:
MICHAEL GROSSO
ALDERMAN – 1ST DISTRICT
BRYAN MCENTEE
ALDERMAN – 1ST DISTRICT
ADRIAN SANCHEZ
ALDERMAN – 5TH DISTRICT
RAFAEL FELICIANO-ROMAN
ALDERMAN – 5TH DISTRICT
SANDRA MARTINEZ-MCCARTHY
ALDERWOMAN – 5TH DISTRICT

BOARD OF ALDERMEN

THE CITY OF WATERBURY

CONNECTICUT

Committee of Jurisdiction Request: INTERNGOVERNMENTAL

Legislative Inquiry: Modernizing Waterbury's Winter Road Treatment Program

Recommendation of filer(s): The filers of this motion recommend that the proposed legislative inquiry be approved and referred to the Director of Public Works and all appropriate departments for review and response. The inquiry requests a proposed plan, supporting documentation, and financial assessment for transitioning Waterbury's winter road treatment practices from the current sand/salt mixture to a primarily salt-based deicing program, with the goal of improving public safety, operational efficiency, environmental responsibility, and long-term maintenance costs.

Executive Summary / Memo

The inquiry requests that the Director of Public Works, in coordination with the appropriate City departments, provide a written response and formal presentation outlining recommendations and a proposed plan for transitioning Waterbury's winter road maintenance practices toward a salt-based deicing program similar to that utilized by CTDOT.

Specifically, the inquiry requests:

1. Development of a Salt-Based Deicing Plan

A proposed winter road treatment program utilizing sodium chloride (road salt), treated salt, liquid salt brine, and other appropriate deicing materials, including calcium chloride or magnesium chloride where warranted.
These materials lower the freezing point of water, help prevent snow and ice from bonding to pavement, and can improve the efficiency and effectiveness of snow removal operations.

2. Budget Clarification and Financial Analysis

A detailed accounting of the City's current expenditures for sand/salt mixtures, including material purchases, application, labor, equipment, storage, street sweeping, and related cleanup costs.
The inquiry also requests projected expenditures for a salt-based deicing program, including necessary equipment purchases or modifications, material costs, operational adjustments, and potential long-term savings.

KELLY ZIMMERMANN
MINORITY LEADER – 3RD DISTRICT
ALDERMAN – 2nd DISTRICT

Item #: _____
For City Clerk or Board of Alder President



CO-FILERS:
MICHAEL GROSSO
ALDERMAN – 1ST DISTRICT
BRYAN MCENTEE
ALDERMAN – 1ST DISTRICT
ADRIAN SANCHEZ
ALDERMAN – 5TH DISTRICT
RAFAEL FELICIANO-ROMAN
ALDERMAN – 5TH DISTRICT
SANDRA MARTINEZ-MCCARTHY
ALDERWOMAN – 5TH DISTRICT

BOARD OF ALDERMEN
THE CITY OF WATERBURY
CONNECTICUT

3. Implementation Timeline and Phased Transition

A proposed implementation schedule distinguishing between improvements that can reasonably be made during the upcoming 2026–2027 winter season and a more comprehensive transition targeted for the 2027–2028 winter season.
If Public Works determines that a complete transition is not feasible within this timeframe, the inquiry requests a phased implementation proposal identifying operational, financial, and equipment-related barriers, along with recommended solutions.

Supporting Information: Modernizing Waterbury's Winter Road Treatment Program

The City of Waterbury has an opportunity to evaluate and potentially modernize its winter road maintenance practices by adopting a more comprehensive deicing approach modeled after established CTDOT methods. The primary objectives are to improve winter driving conditions, enhance public safety, increase operational efficiency, evaluate potential cost savings, and ensure that taxpayer resources are being utilized responsibly.

Connecticut's Approach to Winter Road Safety:
Over the past two decades, CTDOT has transitioned away from traditional sand-based winter road treatment in favor of salt-based deicing and anti-icing practices.
CTDOT primarily utilizes sodium chloride (road salt), treated salt, and liquid salt brine to manage snow and ice on state-maintained roads.

Unlike sand, which provides temporary traction but does not melt ice, salt-based treatments lower the freezing point of water and help prevent snow and ice from bonding to pavement. These methods can improve snowplowing effectiveness, reduce the accumulation of packed snow and ice, and help restore safer roadway conditions during and following winter storms. While Connecticut's 169 municipalities establish their own winter maintenance practices, CTDOT's transition provides an established operational model for Waterbury to evaluate and potentially adapt to its municipal road network.

Why Waterbury Should Evaluate a Transition?:

1. Public Safety and Road Conditions
Winter road maintenance is a critical public safety responsibility. Effective deicing can reduce ice accumulation, improve roadway conditions, and help maintain safer travel for motorists, school buses, emergency responders, and pedestrians.

KELLY ZIMMERMANN
MINORITY LEADER – 3RD DISTRICT
ALDERMAN – 2nd DISTRICT

Item #: _____
For City Clerk or Board of Alder President



CO-FILERS:
MICHAEL GROSSO
ALDERMAN – 1ST DISTRICT
BRYAN MCENTEE
ALDERMAN – 1ST DISTRICT
ADRIAN SANCHEZ
ALDERMAN – 5TH DISTRICT
RAFAEL FELICIANO-ROMAN
ALDERMAN – 5TH DISTRICT
SANDRA MARTINEZ-MCCARTHY
ALDERWOMAN – 5TH DISTRICT

BOARD OF ALDERMEN

THE CITY OF WATERBURY

CONNECTICUT

Waterbury's steep hills, heavily traveled corridors, residential neighborhoods, and varying roadway conditions make it especially important to evaluate the most effective winter treatment strategies.
A comprehensive deicing plan should consider the City's unique geography, roadway classifications, traffic patterns, and emergency access requirements.

2. Fiscal Responsibility and Operational Efficiency
Although salt-based deicing materials may have different upfront costs than traditional sand/salt mixtures, a comprehensive financial comparison should consider the total cost of winter road maintenance rather than material purchases alone.
Potential operational benefits and cost savings may include:

- Reduced street sweeping and post-winter cleanup requirements.
- Reduced sediment accumulation in catch basins and storm drainage systems.
- Improved snowplowing efficiency and winter maintenance operations.
- Potential reductions in labor, equipment usage, and material handling.
- More efficient allocation of Public Works personnel and resources.

The City should evaluate these potential benefits against anticipated material, equipment, storage, training, and implementation costs to determine the overall financial impact.

3. Environmental and Infrastructure Considerations
Sand does not dissolve and can accumulate along roadways, within catch basins, and throughout stormwater drainage systems, creating additional cleanup and maintenance responsibilities.
Salt-based treatments can reduce the need for abrasive materials but present environmental concerns of their own, including chloride contamination of groundwater and waterways and corrosion of vehicles and infrastructure.

For this reason, the inquiry encourages Public Works to evaluate a responsible, calibrated deicing program incorporating appropriate application rates, weather monitoring, equipment calibration, and established best management practices to minimize unnecessary salt use.

4. Planning for a Responsible Transition
Recognizing that changes to winter maintenance operations may require financial investment, equipment modifications, operational adjustments, and employee training, this inquiry does not presume that a complete transition can occur immediately.

Rather, it requests a practical, financially responsible implementation proposal identifying improvements that can be accomplished during the 2026–2027 winter season and additional

KELLY ZIMMERMANN
MINORITY LEADER – 3RD DISTRICT
ALDERMAN – 2nd DISTRICT

Item #: _____
For City Clerk or Board of Alder President



CO-FILERS:
MICHAEL GROSSO
ALDERMAN – 1ST DISTRICT
BRYAN MCENTEE
ALDERMAN – 1ST DISTRICT
ADRIAN SANCHEZ
ALDERMAN – 5TH DISTRICT
RAFAEL FELICIANO-ROMAN
ALDERMAN – 5TH DISTRICT
SANDRA MARTINEZ-MCCARTHY
ALDERWOMAN – 5TH DISTRICT

BOARD OF ALDERMEN
THE CITY OF WATERBURY
CONNECTICUT

measures necessary to support a more comprehensive transition for the 2027–2028 winter season.

Information Requested from Public Works:
The legislative inquiry requests a written response and presentation to the appropriate committee of the Board of Aldermen addressing the following:

1. Deicing Program Development
A proposed winter road treatment plan utilizing sodium chloride, treated salt, liquid brine, and other appropriate deicing materials, modeled after CTDOT practices and adapted to Waterbury's specific roadway conditions.
The proposal should identify recommended treatment methods, operational procedures, equipment requirements, and any circumstances where sand or alternative traction materials may remain necessary.

2. Budget and Equipment Analysis
A detailed comparison of current sand/salt expenditures with projected salt-based deicing program costs.
The analysis should include:

- Current material quantities, purchase costs, and annual expenditures, preferably covering the previous five winter seasons.
- Estimated costs of salt-based deicing materials and anticipated annual usage.
- Existing equipment capabilities and necessary purchases or modifications.
- Storage, handling, and application requirements.
- Labor, street sweeping, catch basin maintenance, and post-winter cleanup expenditures.
- Potential operational savings and anticipated ongoing costs.

Available funding within the current budget and any additional appropriations or transfers that may be necessary.

3. Implementation Timeline and Phasing
An assessment of whether a transition can begin during the 2026–2027 winter season, including recommended operational changes, equipment needs, estimated costs, and proposed timelines.
The response should also identify the requirements for a more comprehensive transition during the 2027–2028 winter season.
If a complete transition is not considered feasible, Public Works is requested to provide a phased implementation plan explaining the limitations, anticipated costs, recommended milestones, and estimated completion timeline.

KELLY ZIMMERMANN
MINORITY LEADER – 3RD DISTRICT
ALDERMAN – 2nd DISTRICT

Item #: _____
For City Clerk or Board of Alder President



CO-FILERS:
MICHAEL GROSSO
ALDERMAN – 1ST DISTRICT
BRYAN MCENTEE
ALDERMAN – 1ST DISTRICT
ADRIAN SANCHEZ
ALDERMAN – 5TH DISTRICT
RAFAEL FELICIANO-ROMAN
ALDERMAN – 5TH DISTRICT
SANDRA MARTINEZ-MCCARTHY
ALDERWOMAN – 5TH DISTRICT

BOARD OF ALDERMEN

THE CITY OF WATERBURY

CONNECTICUT

A Commitment to Safer Streets and Accountable Government

Waterbury residents deserve safe, well-maintained streets and confidence that taxpayer dollars are being used effectively. This inquiry is not intended to mandate the elimination of sand under every circumstance. Rather, it requests that Public Works evaluate existing practices, compare them with established state-level methods, and present a measurable plan for potential improvements.

The goal is to move Waterbury toward a more effective, transparent, and fiscally responsible winter road maintenance program that prioritizes public safety while carefully evaluating operational costs, long-term financial impacts, and environmental considerations.

The undersigned members of the Board of Aldermen look forward to receiving a written response and formal presentation from the Department of Public Works outlining its findings, financial analysis, recommendations, and proposed path forward.

Official Filing:

That the Board of Aldermen refer this legislative inquiry to the Intergovernmental Committee for review and request that the Director of Public Works, in coordination with all appropriate City departments, provide a written response and formal presentation regarding the feasibility, financial implications, equipment requirements, and proposed implementation timeline for transitioning the City of Waterbury toward a salt-based winter road deicing program modeled after CTDOT practices.

Be it further acknowledged that any proposed budget transfers, supplemental appropriations, or other funding requests necessary to implement the recommended plan shall be referred to the appropriate committee, including the Finance Committee where applicable, and submitted to the Board of Aldermen for consideration and approval in accordance with applicable City procedures.

The Department of Public Works is requested to provide its preliminary written findings within 30 calendar days of referral, including any immediate operational recommendations that could be implemented during the 2026–2027 winter season.

TAX COLLECTOR'S OFFICE

Memo

To: City Clerk's Office

From: Tax Collector

CC:

Date: 10/8/2026

Re: Tax Refunds for the Board of Aldermen meeting on October 19, 2026.

Please acknowledge receipts of the attached vouchers representing tax refunds to be approved by the Board of Aldermen meeting on October 19, 2026

Cassie Dean

The vouchers represent $6,278.01 in tax refunds.

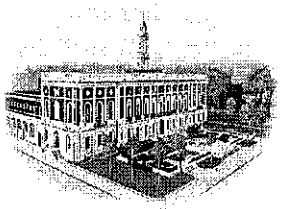

OFFICE OF THE TAX COLLECTOR
THE CITY OF WATERBURY
CONNECTICUT

October 8, 2026

The Honorable Board of Aldermen
C/o City Clerk's Office
235 Grand St
Waterbury, CT 06702

Dear Honorable Board,

I hereby request that the following vouchers be approved by your Board. The vouchers represent tax refunds by the taxpayers for the tax bills as follows:

** SEE ATTACHED**

LIST YR	AC #	BILL #	NAME AND ADDRESS	AMOUNT	REASON
25mv	29946	52287	American Adjustment Bureau 73 Field St	$94.51	MV Adjustment
25mv	30009	52887	Thelma Appel 23 Williams Ave	$69.46	Excessive Payment
24/25mv	0037-30037	various	Carfast Rentals LLC 434 Congress Ave	$2,560.23	MV Adjustment
24mv	29975	61170	Nadi Choku 65 Twining Ave	$199.79	Excessive Payment
24mv	29582	64853	Glenn Dansby 122 Berkeley Ave	$192.65	MV Adjustment
25mv	30066	75721	Kelvin Goodwin 1745 North Main St	$221.68	MV Adjustment
24supp	30066	84367	Kelvin Goodwin 1745 North Main St	$78.26	MV Adjustment
24mv	29928	98971	Ernest Phillips 317 West Main St	$281.11	MV Adjustment
25mv	29929	1023016	Esther Rabinowich 64 Blueridge Dr Ext	$88.04	MV Adjustment
24mv	29939	102779	Iman Ririm 24 Union St	$49.49	MV Adjustment
23mv	29939	103540	Iman Ririm 24 Union St	$111.34	MV Adjustment
25mv	30028	110537	Michelle Serrano 99 Cottage Grove Ln	$113.29	Excessive Payment
25mv	29885	114979	Majlinda Tili 56 Parkwood Ave	$138.12	MV Adjustment
25mv	30060	121781	Mark Williams 32 Colony St Ext	$2,080.04	BAA Adjustment
			Total	$6,278.01	

Respectfully submitted,

Cassie M. Gorman, CCMC
Tax Collector

CMG/wf